Revised Environmental Assessment/ Final Environmental Impact Report for the Downtown San Bernardino Passenger Rail Project

APPENDIX J

State Clearinghouse No. 2011051024

Federal Transit Administration

San Bernardino Associated Governments

August 2012

LIST OF APPENDICES

Appendix A **Notice of Preparation, NOP Distribution List, Public Review Comments, and Scoping Meeting Summary**

Appendix B **Air Quality and Greenhouse Gas Technical Memorandum**

Appendix C **Biological Technical Memorandum**

Appendix D **Cultural Resources Technical Memorandum**

Appendix E **Geotechnical Investigation Report**

Appendix F **Phase I Environmental Site Assessment**

Appendix G **Water Quality Assessment Report**

Appendix H **Land Use Technical Memorandum**

Appendix I **Noise Technical Memorandum**

Appendix J **Traffic Impact Analysis**

APPENDIX J TRAFFIC IMPACT ANALYSIS

Submitted by:

DOWNTOWN SAN BERNARDINO PASSENGER RAIL PROJECT (WITH 3RD STREET CLOSURE)

Draft Traffic Impact Analysis

Submitted to:

San Bernardino Associated Governments

Prepared By
Shaumik Pal, Senior Transportation Planner
Iteris Inc., 801 S. Grand Avenue, Suite 530
Los Angeles, California, 90017
Tel: (213) 488.0345 Fax: (213) 488.9440

April 10, 2012

DOCUMENT VERSION CONTROL

Document Name	Submittal Date	Version No.
Downtown San Bernardino Passenger Rail Project (With 3rd St Closure)	September 13, 2011	A.1
Downtown San Bernardino Passenger Rail Project (With 3rd St Closure)	October 3, 2011	A.2
Downtown San Bernardino Passenger Rail Project (With 3rd St Closure)	January 30, 2012	A.3
Downtown San Bernardino Passenger Rail Project (With 3rd St Closure)	April 10, 2012	A.4

I certify that this ***TRAFFIC IMPACT STUDY*** *has been prepared under my immediate supervision and that I have experience and training in the field of traffic and transportation engineering.*

Viggen Davidian, P.E.
California Registration 36335
Iteris Inc.

TABLE OF CONTENTS

1.0 INTRODUCTION 1
1.1 PURPOSE OF THE REPORT 1
1.2 PROJECT DESCRIPTION 1
2.0 ANALYSIS METHODOLOGY 7
2.1 STUDY AREA 7
2.2 DEVELOPMENT OF TRAFFIC VOLUMES 11
2.3 INTERSECTION LEVEL OF SERVICE 30
2.4 LEVEL OF SERVICE STANDARD 31
3.0 EXISTING CONDITIONS 31
4.0 OPENING YEAR (2014) TRAFFIC CONDITIONS 34
4.1 YEAR 2014 NO PROJECT CONDITIONS 37
4.2 YEAR 2014 WITH PROJECT CONDITIONS 39
5.0 FORECAST YEAR (2035) TRAFFIC CONDITIONS 41
5.1 YEAR 2035 NO PROJECT CONDITIONS 41
5.2 YEAR 2035 WITH PROJECT CONDITIONS 43
5.3 RECOMMENDED MITIGATION MEASURES 45
5.4 CLOSURE OF SOUTH LEG OF I STREET/RIALTO AVENUE INTERSECTION 45
6.0 PARKING LOT INGRESS AND EGRESS 46
7.0 OMNITRANS BUS FACILITY OPERATIONS 47
8.0 SUMMARY AND CONCLUSIONS 48

APPENDICES

Appendix A: Traffic Count Sheets
Appendix B: Volume Development Worksheets
Appendix C: Bus Routes and Schedules
Appendix D: Level of Service Calculation Worksheets

LIST OF TABLES

Table 1: Parking Lot Trip Generation Estimates 13
Table 2: Bus Trip Generation 19
Table 3: Office Building Trip Generation Estimates 21
Table 4: Intersection Level of Service Definitions 31
Table 5: Existing (2009/2010/2011) Peak Hour Levels of Service 33
Table 6: Year 2014 No Project Peak Hour Levels of Service 38
Table 7: Year 2014 With Project Peak Hour Levels of Service 40
Table 8: Year 2035 No Project Peak Hour Levels of Service 42
Table 9: Year 2035 With Project Peak Hour Levels of Service 44
Table 10: With Project With Improvements Peak Hour Levels of Service 45
Table 11: Queue Lengths 46

LIST OF FIGURES

Figure 1: Regional Location 2
Figure 2: Project Location and Study Area 3
Figure 3: Location of the Proposed Bus Facility and the Parking Lot 5
Figure 4: Proposed Street Closures 6
Figure 5: Existing Study Intersections 9
Figure 6: Study Intersections 10
Figure 7: Existing (2009/2010/2011) Peak Hour Volumes 12
Figure 8: 2035 No Project Peak Hour Volumes 14
Figure 9: 2035 I Street Redistribution Volumes 15
Figure 10: 2035 3rd Street Redistribution Volumes 16
Figure 11: Parking Lot Trip Distribution 17
Figure 12: Additional Trips Generated by the Proposed Parking Lot 18
Figure 13: Additional Bus Trips (PCE) Generated by the Proposed Omnitrans Bus Facility 20
Figure 14: Office Building Trip Distribution 22
Figure 15: Additional Trips Generated by the Proposed Office Building 23
Figure 16: 2035 With Project Peak Hour Volumes 25
Figure 17: 2014 No Project Peak Hour Volumes 26
Figure 18: 2014 I Street Redistribution Volumes 27
Figure 19: 2014 3rd Street Redistribution Volumes 28
Figure 20: 2014 With Project Peak Hour Volumes 29
Figure 21: Existing Lane Geometry 32
Figure 22: Year 2014 and Year 2035 No Project Lane Geometry 35
Figure 23: Year 2014 and Year 2035 With Project Lane Geometry 36

1.0 INTRODUCTION

1.1 PURPOSE OF THE REPORT

The purpose of this report is to present the methodology, findings and conclusions related to the traffic and circulation impacts of the proposed Downtown San Bernardino Passenger Rail Project (Project). The Project will extend Metrolink service from its existing terminus at the Santa Fe Depot in San Bernardino to a proposed new rail station to be located at Rialto Avenue and E Street in downtown San Bernardino (San Bernardino Transit Center). This report analyzes traffic operations associated with existing conditions, future No Project conditions and future With Project conditions. **Figure 1** shows the regional location of the Project. Construction of the Project is expected to be completed by 2014. The location of the Project site is illustrated in **Figure 2**. The traffic conditions are evaluated for each of the following scenarios:

1. Existing Conditions;
2. Opening Year (2014) No Project Conditions;
3. Opening Year (2014) With Project Conditions;
4. Forecast Year (2035) No Project Conditions; and
5. Forecast Year (2035) With Project Conditions.

As discussed later in this report, ongoing construction activity related to the widening of Interstate 215 in the Project vicinity necessitated the use of 2009 as the baseline for the traffic analysis, because current (2010-2011) traffic conditions are atypical. For the same reason, an "existing plus Project" analysis is not possible, as the roadways in the Project vicinity are currently being modified.

1.2 PROJECT DESCRIPTION

The San Bernardino Association of Governments (SANBAG) is proposing the Downtown San Bernardino Passenger Rail Project. Currently, Metrolink commuter trains originate and terminate at the Santa Fe Depot, on 3rd Street west of Interstate 215 (I-215) in the City of San Bernardino, San Bernardino County, California. The proposed Project would extend Metrolink regional passenger rail service approximately 1 mile east from its current terminus at the existing San Bernardino Metrolink Station/Santa Fe Depot (Depot) located at 1170 West Third Street to new Metrolink commuter rail platforms proposed near the intersection of Rialto Avenue and E Street in the City of San Bernardino (City), San Bernardino County, California. The primary features of the Project include: construction of a second track, rail platforms, parking lots, a pedestrian overpass at the Depot, an Omnitrans Bus Facility; grade crossing improvements to support Quiet Zones; railroad signalization; and roadway closures. The proposed Project's secondary features include: construction of drainage improvements, utility accommodation, and implementation of safety controls.

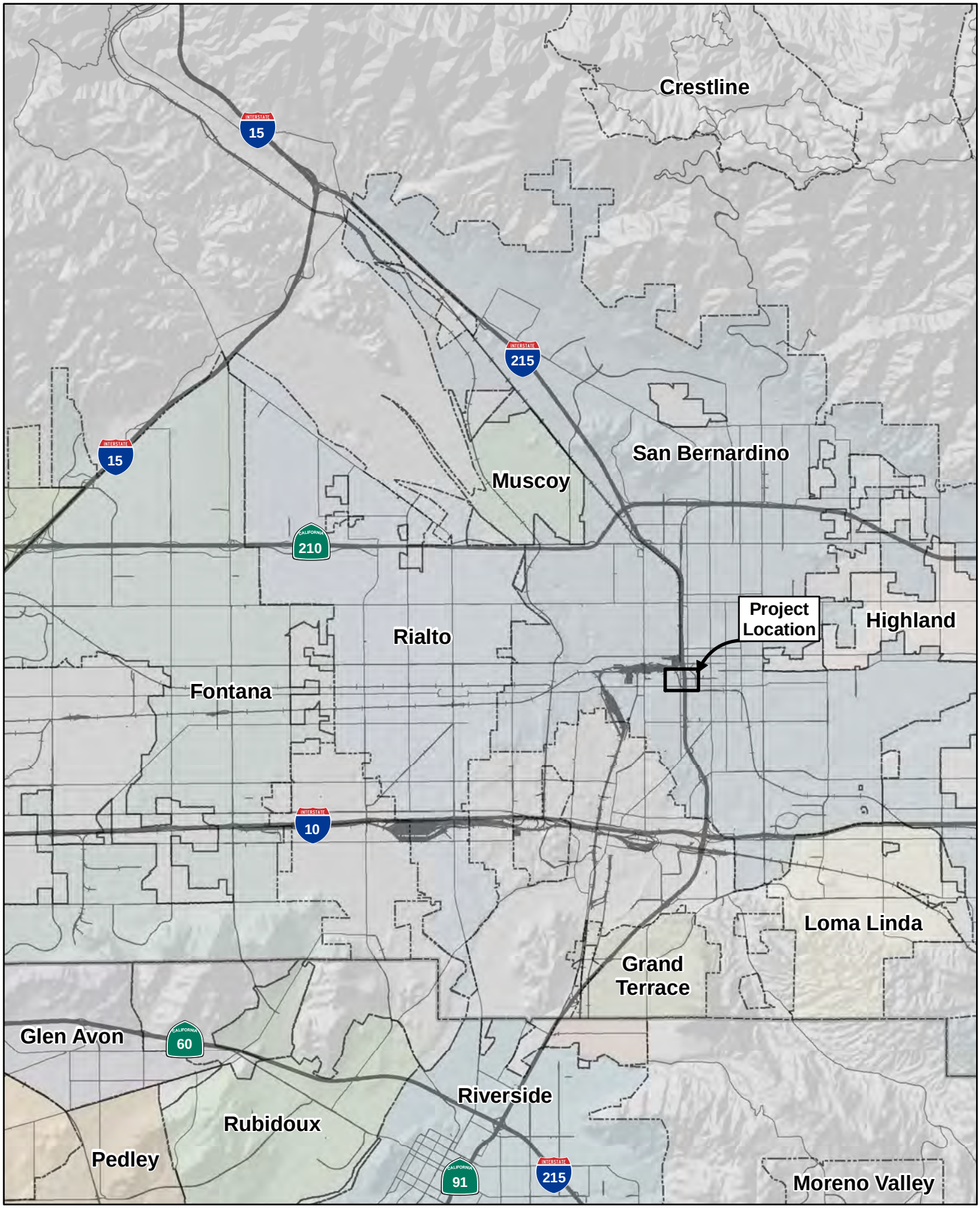

Q:\2010\16\Jobs\J10-1613 Laguna Canyon\Graphics\GIS\MXDs\J10-1613_Regional.mxd

ITERIS Innovation for better mobility

Downtown San Bernardino Passenger Rail Project
City of San Bernardino

Figure 1
Regional Location

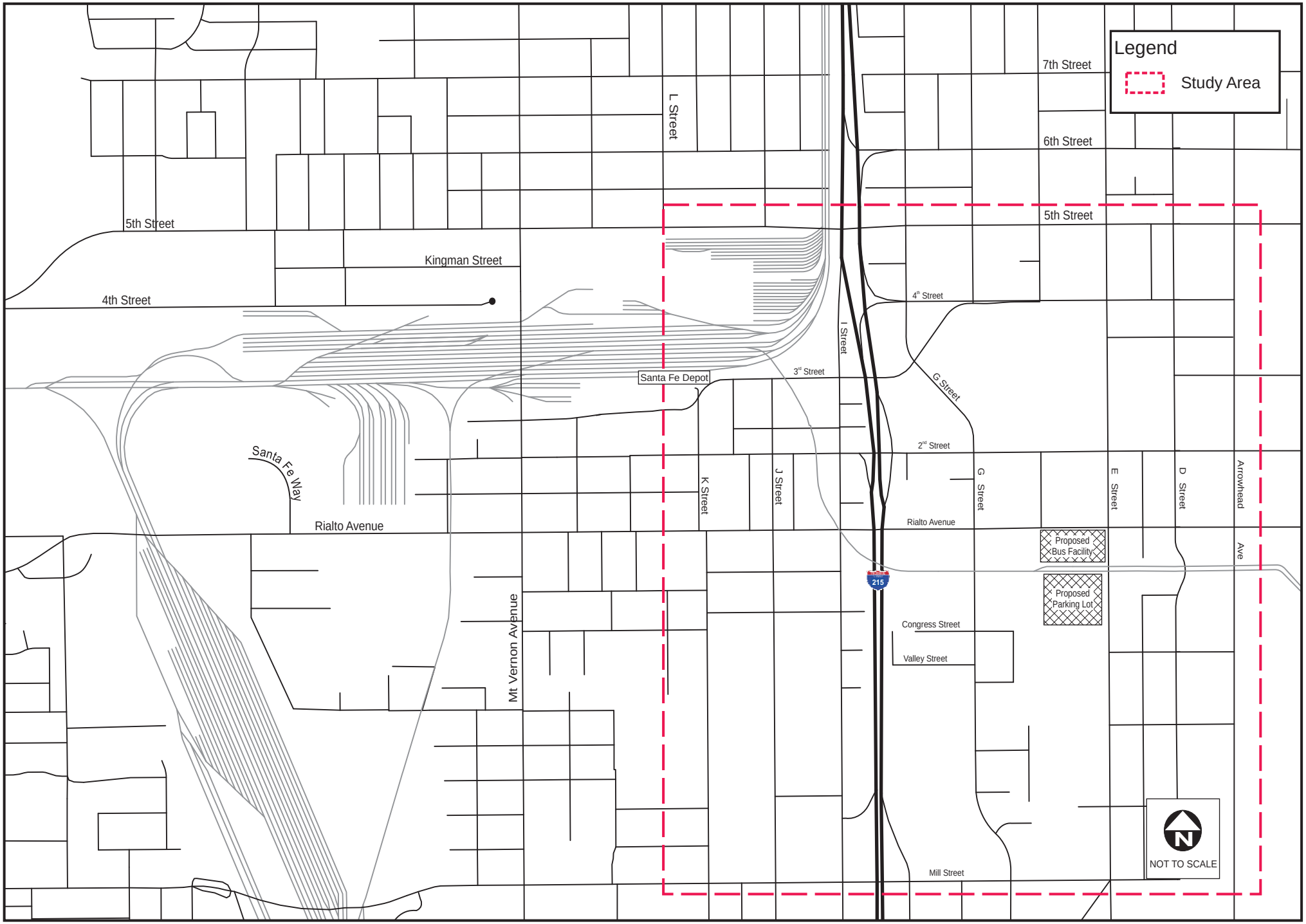

ITERIS

Downtown San Bernardino Passenger Rail Project
City of San Bernardino

FIGURE 2
Project Location and Study Area

Q:\2010\16\Jobs\J10-1606 Redlands First Mile\Gra\Revision_Dec2011\With 3rd St Closure\Figures 2&4.cdr

The Omnitrans Bus Facility (Bus Facility) would be located at the southwest corner of the intersection of Rialto Avenue and E Street on a 4.8 acre site owned by Omnitrans and SANBAG. The Bus Facility would include up to 22 on-site bus bays, bus circulation and street access improvements, pedestrian access improvements (e.g. crosswalks), and associated support facilities (e.g. security lighting). **Figure 3** illustrates the preliminary site plan and layout of the Bus Facility. As shown, bus ingress and egress would occur from Rialto Street. Additional parking and pedestrian improvements would also be constructed along Rialto Street. The Bus Facility would include up to 12,000 square feet of office space.

Previously referenced **Figure 3** shows the location of the proposed parking lot and the Bus Facility at the San Bernardino Transit Center. As shown, the proposed parking lot can be entered/exited via two driveways. One access point is on Congress Street to the west and the other is on E Street to the east. Both the entrances are proposed to be one-way stop controlled intersections as part of this traffic analysis. Parking will be free at both the Santa Fe Depot and the San Bernardino Transit Center parking lots and there will not be any restrictions on parking duration at these lots.

To enhance safety in the vicinity of the new commuter rail service, selective street reconfigurations are proposed, which are illustrated in **Figure 4**. Descriptions of these street reconfigurations are provided below:

- 3rd Street will be closed between J Street and the rail line, eliminating the grade crossing. The intersection of 3rd Street and J Street will be reconfigured as a “dog leg”.
- I Street at Rialto Avenue will be converted to a cul-de-sac on the south side. The north leg of the intersection will be converted to a right-in/right out intersection. The existing traffic signal at this intersection will be removed and replaced with a stop sign.
- The intersection of K Street/3rd Street will be reconfigured so that 3rd Street becomes the west leg of the intersection forming a T-intersection with K Street. The driveway to the Santa Fe Depot south parking lot will be reconfigured to include an exclusive northbound left-turn lane.
- The intersection of K Street/2nd Street will be reconfigured to include an exclusive southbound left-turn lane.
- The intersection of I Street/2nd Street will be restriped to include an exclusive southbound right-turn lane.

In addition, the I-215 widening project that is currently under construction will convert I Street south of 3rd Street to a cul-de-sac. The sbX E Street Corridor Bus Rapid Transit (BRT) project will convert the center lane on E Street within the study area to an exclusive (bus only) lane.

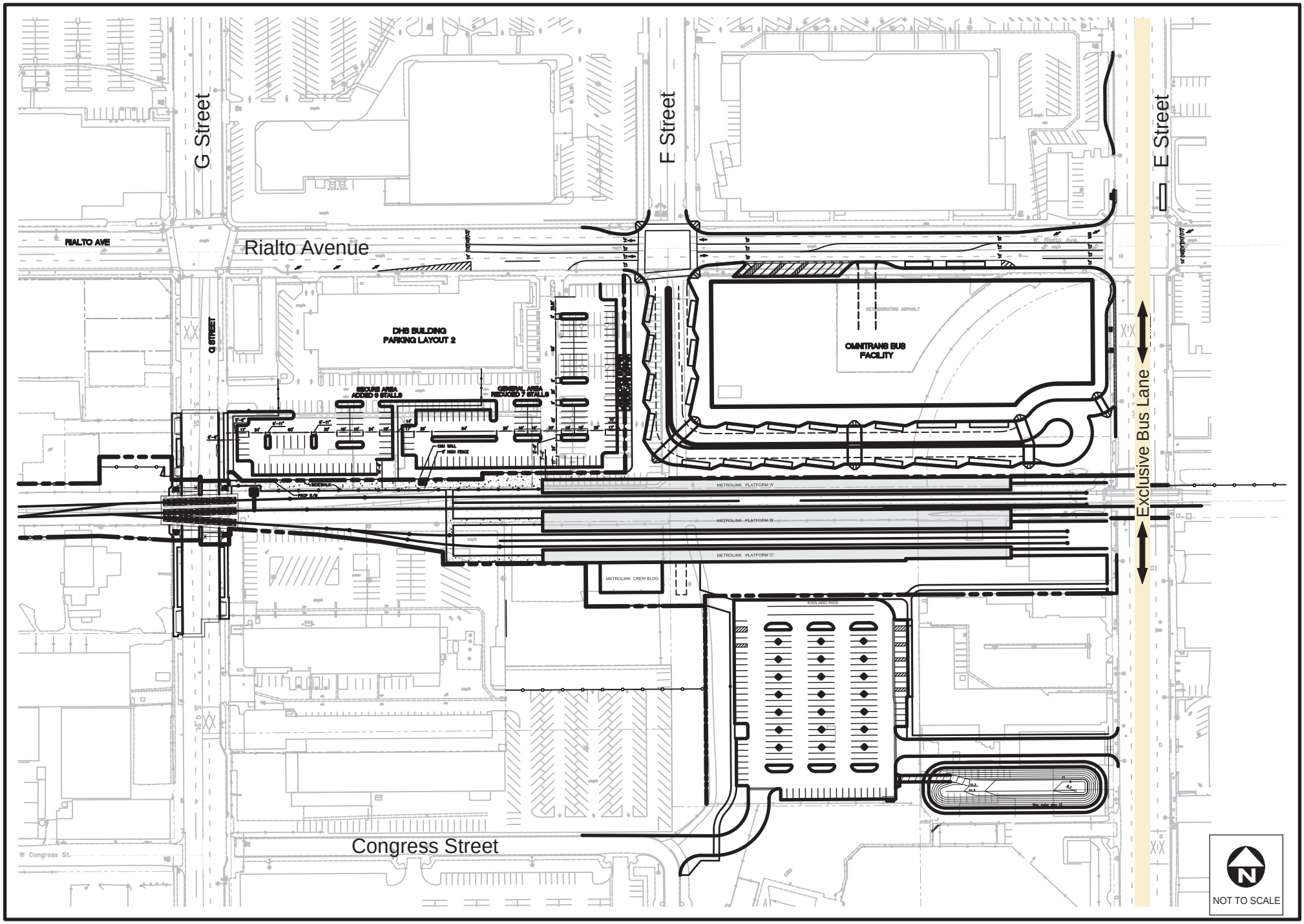

Downtown San Bernardino Passenger Rail Project

City of San Bernardino

FIGURE 3

Location of the Proposed Omnitrans Bus Facility and the Parking Lot

Q:\2010\16\Jobs\J10-1606 Redlands First Mile\Gra\Revision_Dec2011\With 3rd St Closure\Figure 3.cdr

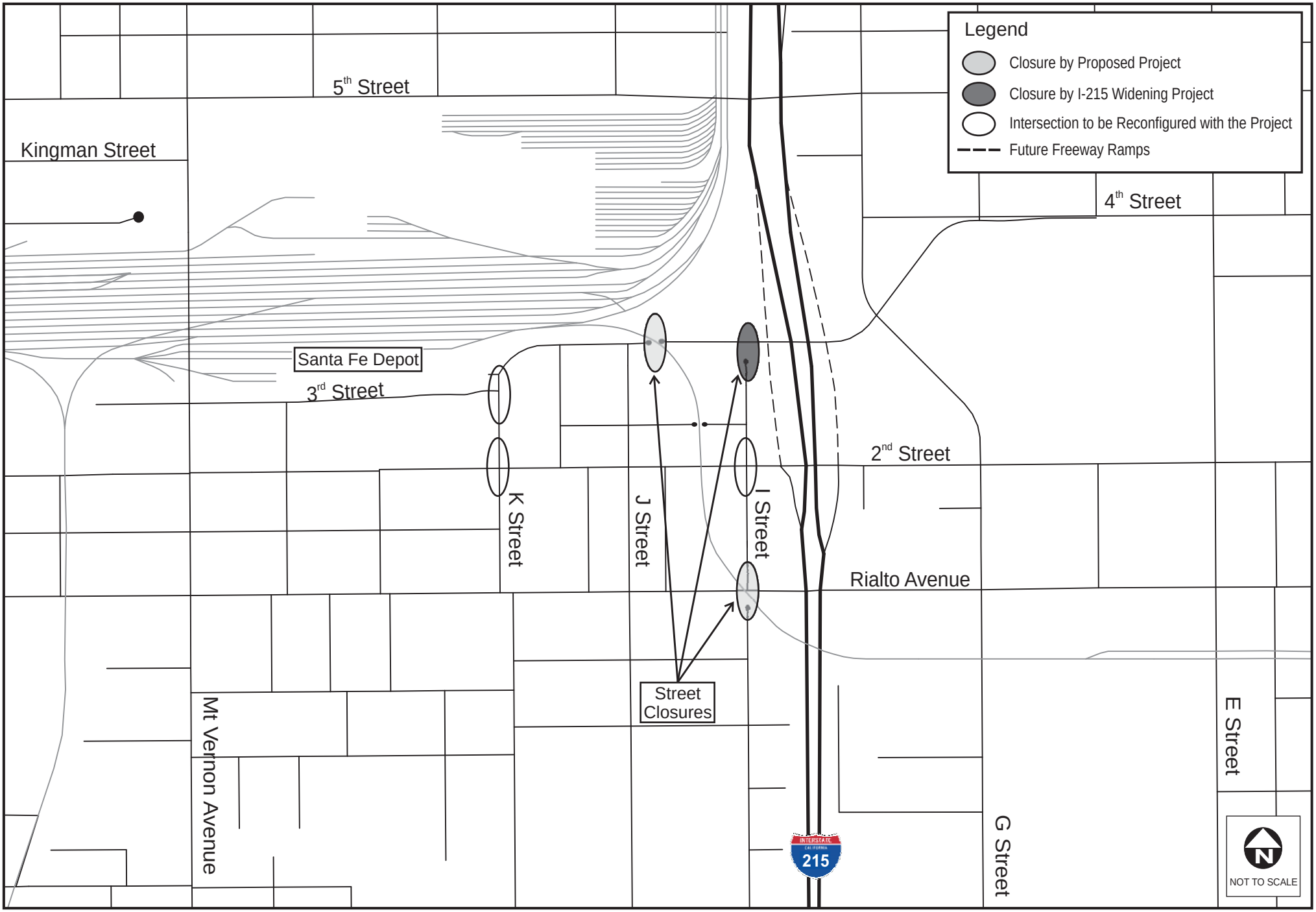

NOTE: *The north leg of the intersection of I Street/Rialto Avenue will be converted to a right-in/right-out and the existing traffic signal will be removed*

ITERIS

Downtown San Bernardino Passenger Rail Project
City of San Bernardino

FIGURE 4
Proposed Street Closures

Q:\2010\16\Jobs\J10-1606 Redlands First Mile\Gra\Revision_Dec2011\With 3rd St Closure\Figures 2&4.cdr

2.0 ANALYSIS METHODOLOGY

2.1 STUDY AREA

The study area for the analysis of potential traffic impacts of the Project includes intersections in the Project vicinity through which traffic would be likely to impact an intersection. The following intersections are included:

1. K Street and 3rd Street;
2. K Street and 2nd Street;
3. K Street and Rialto Avenue;
4. J Street and 3rd Street;
5. J Street and 2nd Street;
6. J Street and Rialto Avenue;
7. I Street and 3rd Street;
8. I Street and 2nd Street;
9. I Street and Rialto Avenue;
10. I-215 SB Off Ramp and 3rd Street (future);
11. I-215 SB On Ramp and 2nd Street;
12. I-215 NB On Ramp and 3rd Street (future);
13. I-215 NB On/Off Ramps and 2nd Street;
14. G Street and 3rd Street;
15. G Street and 2nd Street;
16. G Street and Rialto Avenue;
17. G Street and Congress Street;
18. Parking Lot Entrance and Congress Street (future);
19. E Street and 2nd Street;
20. E Street and Rialto Avenue;
21. E Street and Parking Lot Entrance (future);
22. Arrowhead Avenue and Rialto Avenue;
23. H Street and 5th Street;
24. F Street and Rialto Avenue;
25. E Street and 5th Street;
26. E Street and 4th Street; and
27. E Street-Inland Center Drive and Mill Street.

In addition to the existing intersections, the reconfiguration of the 2nd Street freeway ramps as part of the I-215 widening project will create two new ramp intersections, and the proposed parking lot near the San Bernardino Transit Center will create two more intersections, which are also included in this analysis. The locations of the existing study intersections are illustrated in **Figure 5**. **Figure 6** illustrates the location of all study intersections, including the future ramp intersections created by the I-215 widening project and the future entry points to the proposed parking lot. The two 3rd Street ramp intersections will be operational by 2014 with or without the Project. In addition, the intersection of I Street/3rd Street (#7) will be eliminated by 2014 once the new I-215 ramps become operational at 3rd Street. The traffic analysis has been conducted based on guidelines given in Appendix C of the SANBAG Congestion Management Plan (CMP) for traffic impact analysis reports (2009).

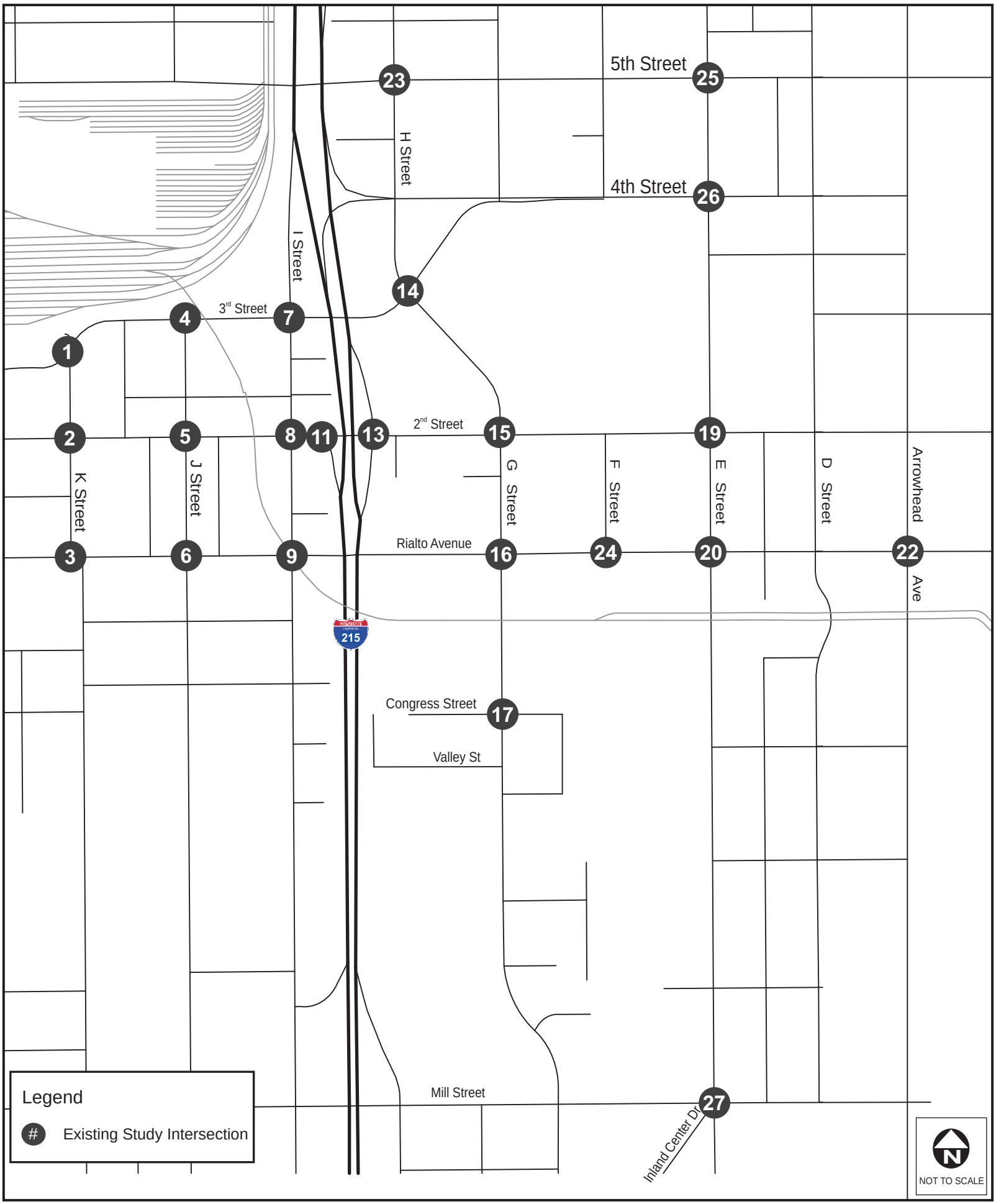

ITERIS

Downtown San Bernardino Passenger Rail Project
City of San Bernardino

FIGURE 5
Existing Study Intersections

Q:\2010\16\Jobs\J10-1606 Redlands First Mile\Gra\Revision_Dec2011\With 3rd St Closure\Figures 5-6.cdr

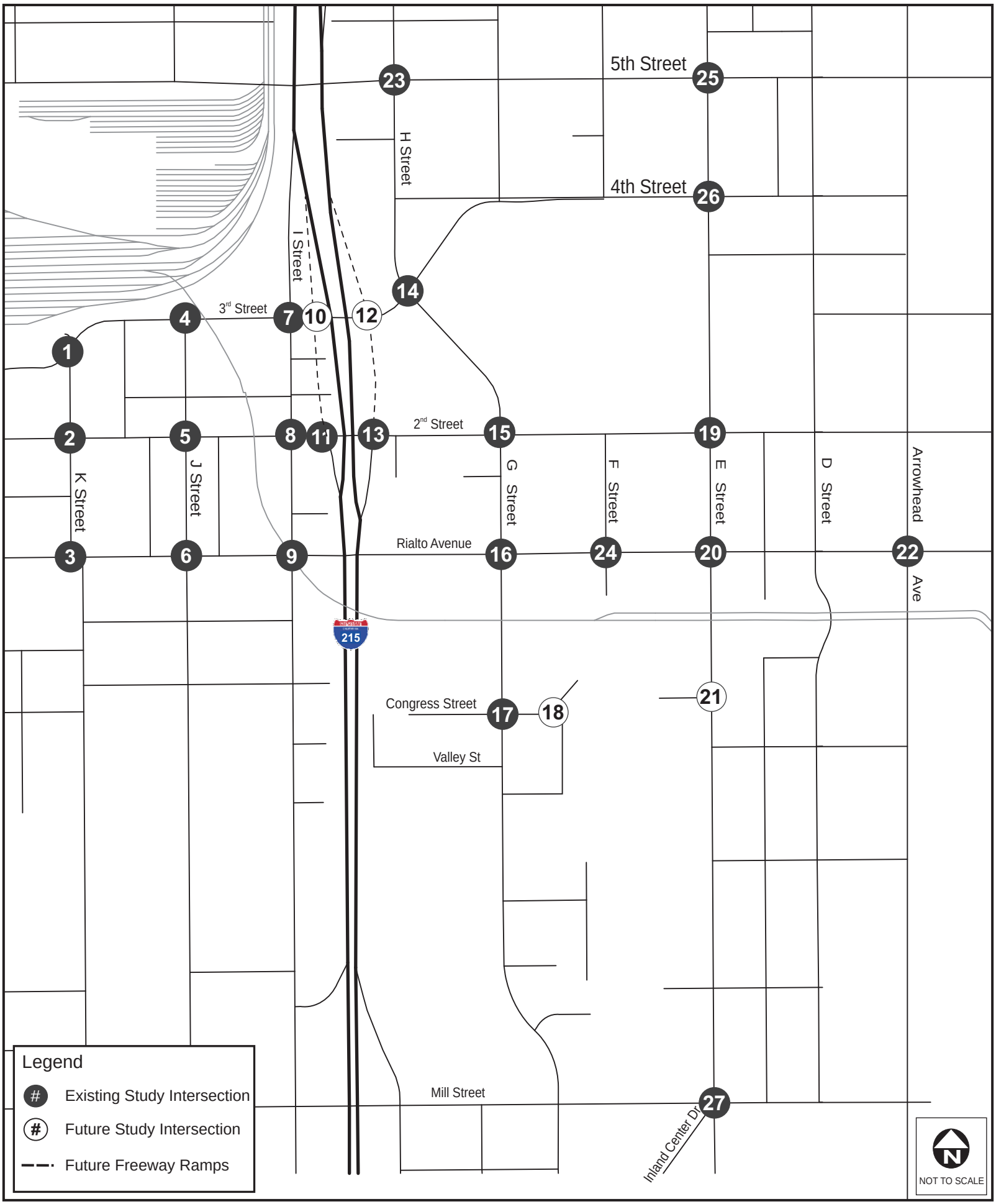

ITERIS

Downtown San Bernardino Passenger Rail Project
City of San Bernardino

FIGURE 6
Study Intersections

Q:\2010\16\Jobs\J10-1606 Redlands First Mile\Gra\Revision_Dec2011\With 3rd St Closure\Figures 5-6.cdr

2.2 DEVELOPMENT OF TRAFFIC VOLUMES

Existing Traffic Volumes

Due to the closure of the I-215 ramps during construction of freeway mainline improvements, October 2009 traffic volume counts (prior to the start of construction) were used for analysis. For locations where 2009 counts were not available, new counts were conducted in April 2010, February 2011, April 2011, and December 2011. Detailed vehicle turning movement data are included in **Appendix A.** Vehicle classification counts (e.g., passenger vehicle, 2-axle truck, 3-axle truck, and 4 or more axle truck), were conducted at five of the twenty three study intersections. The traffic counts at these five intersections were converted to passenger car equivalent (PCE) volumes using PCE factors of 1.5, 2.0, and 3.0 for 2-axle, 3-axle, and 4 or more axle trucks, respectively. PCE volumes at the remaining intersections were calculated utilizing an average PCE factor and truck percentage based on the data at the five intersections. Volume development worksheets are included in **Appendix B**. **Figure 7** shows the existing peak hour volumes at the study intersections.

Forecast Year (2035) No Project Traffic Volumes

Traffic forecasts for the future baseline conditions have been developed using the Regional Transportation Plan (RTP) Travel Demand Model, maintained by the Southern California Association of Governments (SCAG). The forecast year model included the improvements proposed as part of the I-215 widening project. The base year of the travel demand model is 2008, and the forecast condition is year 2035. The "raw" modeled volumes were post-processed to develop refined modeled link volumes. The raw model plots are provided in **Appendix B**.

The following describes in detail the methodology employed to determine the AM and PM peak hour intersection turn movements for 2035 baseline conditions:

- Year 2008 and year 2035 PCE volumes were obtained from the model. The change in directional volume on each intersection approach and departure was calculated by subtracting year 2008 modeled link volumes from year 2035 modeled link volumes.
- The changes in peak hour vehicle volumes represent growth in traffic over the 27-year period from 2008 to 2035. Therefore, the 27-year growth was multiplied by 0.96 (i.e., 26/27) to represent the growth that would be expected in the 26-year span between the existing (2009) counts and 2035. This factored growth was then added to the existing volumes on each roadway segment to develop post-processed year 2035 approach and departure volumes at each intersection.
- Year 2035 turning movement volumes at the study intersections were developed from existing turning movement volumes and year 2035 approach and departure volumes using the methodology described in National Cooperative Highway Research Program Report (NCHRP) 255, *Highway Traffic Data for Urbanized Area Project Planning and Design* (Transportation Research Board, 1982).

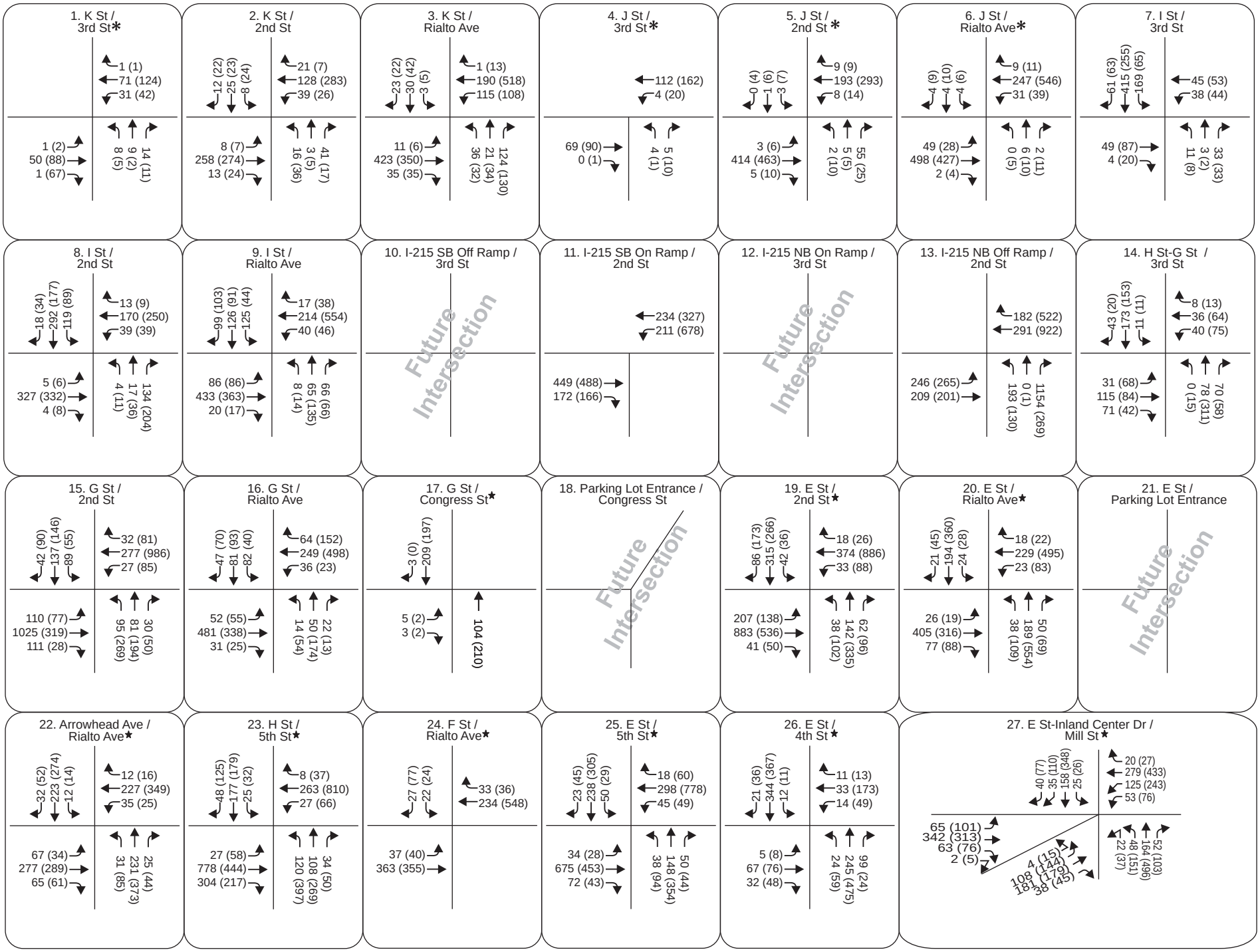

Note: For intersections marked with a "*", counts were conducted in 2010 and for intersections marked with a "★", counts were conducted in 2011

ITERIS

Downtown San Bernardino Passenger Rail Project

City of San Bernardino

FIGURE 7

Existing (2009/2010/2011) Peak Hour Volumes

Q:\2010\16\Jobs\J10-1606 Redlands First Mile\Gra\Revision_Apr2012\With 3rd St Closure\Figures 7-23.cdr

Proposed improvements as part of the I-215 widening project have been included as part of the opening year and forecast year analysis. Adjustments were made to the volumes to reflect the proposed ramp changes in the vicinity of the study area. **Figure 8** shows the year 2035 No Project peak hour volumes at the study intersections. **Figure 9** shows the redistribution of traffic due to I street closure. **Figure 10** shows the redistribution of traffic due to 3rd street closure.

The Project proposes additional parking spaces at the existing Santa Fe Depot parking lot as described earlier. It is assumed that the Santa Fe Depot bound traffic who were parking on the adjacent streets because of unavailable parking at the Depot will now have an option of parking at the Depot. Hence, the proposed additional spaces are not assumed to generate any new traffic.

San Bernardino Transit Center Trips

As described earlier, the Project proposes to construct a new rail station with a parking lot and an Omnitrans Bus Facility near the intersection of E Street and Rialto Avenue. This will generate additional traffic.

Although the number of proposed parking spaces at the transit center has not been finalized, the initial estimate of 265 spaces was assumed for the purpose of this traffic study. The trip generation calculations for this lot were based on rates published in the Institute of Transportation Engineers' (ITE) *Trip Generation, 8th Edition*. Rates published for *Park and Ride Lot with Bus Service* (Code # 90) land use were used to calculate the trips generated by the proposed parking lot. ITE trip generation rates and the trip generation calculations for the parking lot are summarized in **Table 1**.

TABLE 1: PARKING LOT TRIP GENERATION ESTIMATES

Project	Land Use Type	Size	Unit	Daily	AM Peak Hour			PM Peak Hour		
					In	Out	Total	In	Out	Total
Parking Lot	ITE Land Use Code: 90			4.50	81%	19%	0.72	23%	77%	0.62
	Park and Ride Lot with Bus Service	265	spaces	1193	155	36	191	38	127	165

The directional distribution of the new trips generated by the parking lot was developed using the "select zone" run of the SCAG RTP model for the TAZ that represents the site. **Figure 11** illustrates the distribution of parking lot trips. Trip assignment is the product of trip generation multiplied by the trip distribution percentages. The assignment of new trips at each of the study intersections during the weekday AM and PM peak hours is illustrated in **Figure 12.**

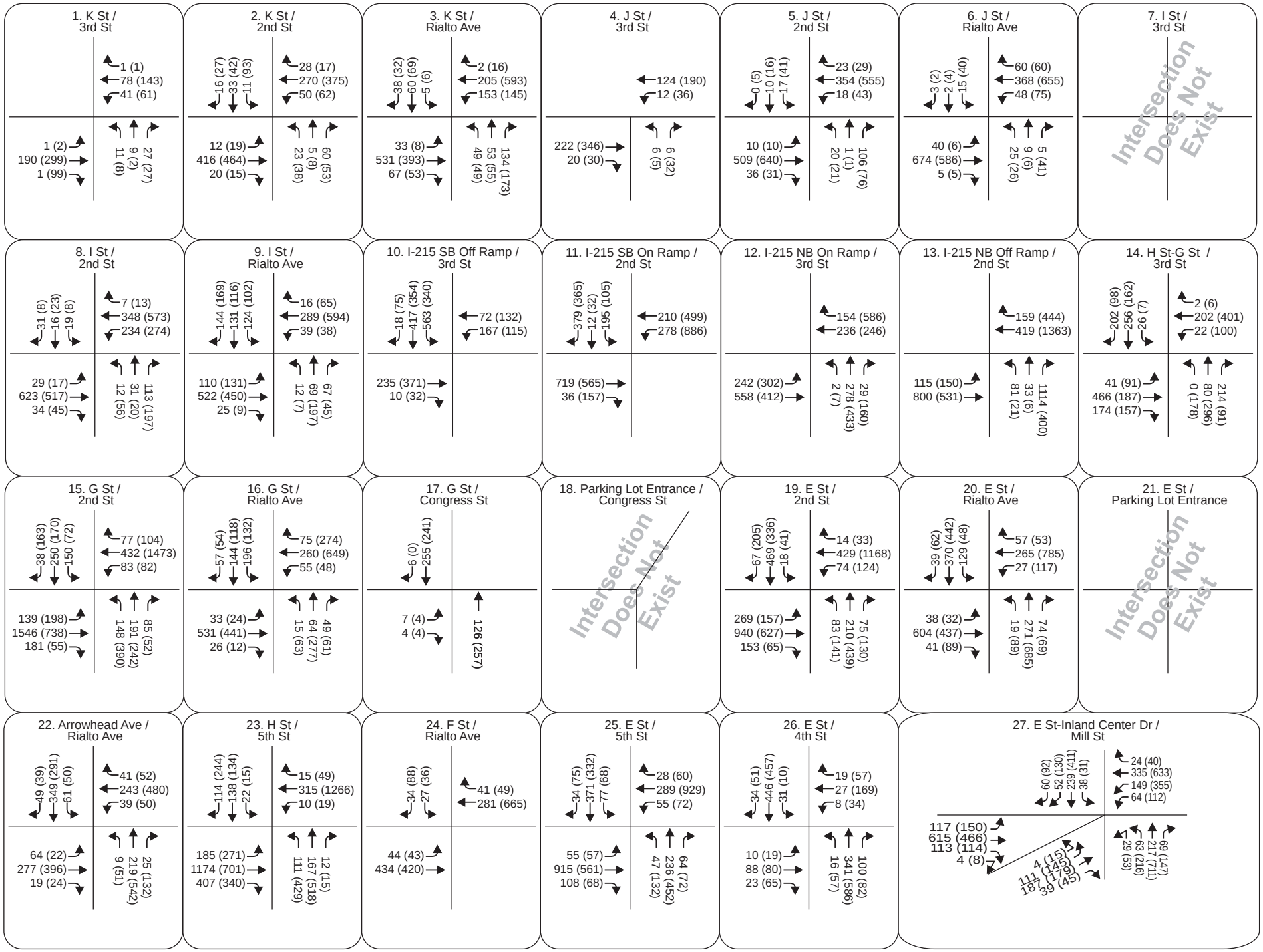

ITERIS

Downtown San Bernardino Passenger Rail Project

City of San Bernardino

FIGURE 8

2035 No Project Peak Hour Volumes

Q:\2010\16\Jobs\J10-1606 Redlands First Mile\Gra\Revision_Apr2012\With 3rd St Closure\Figures 7-23.cdr

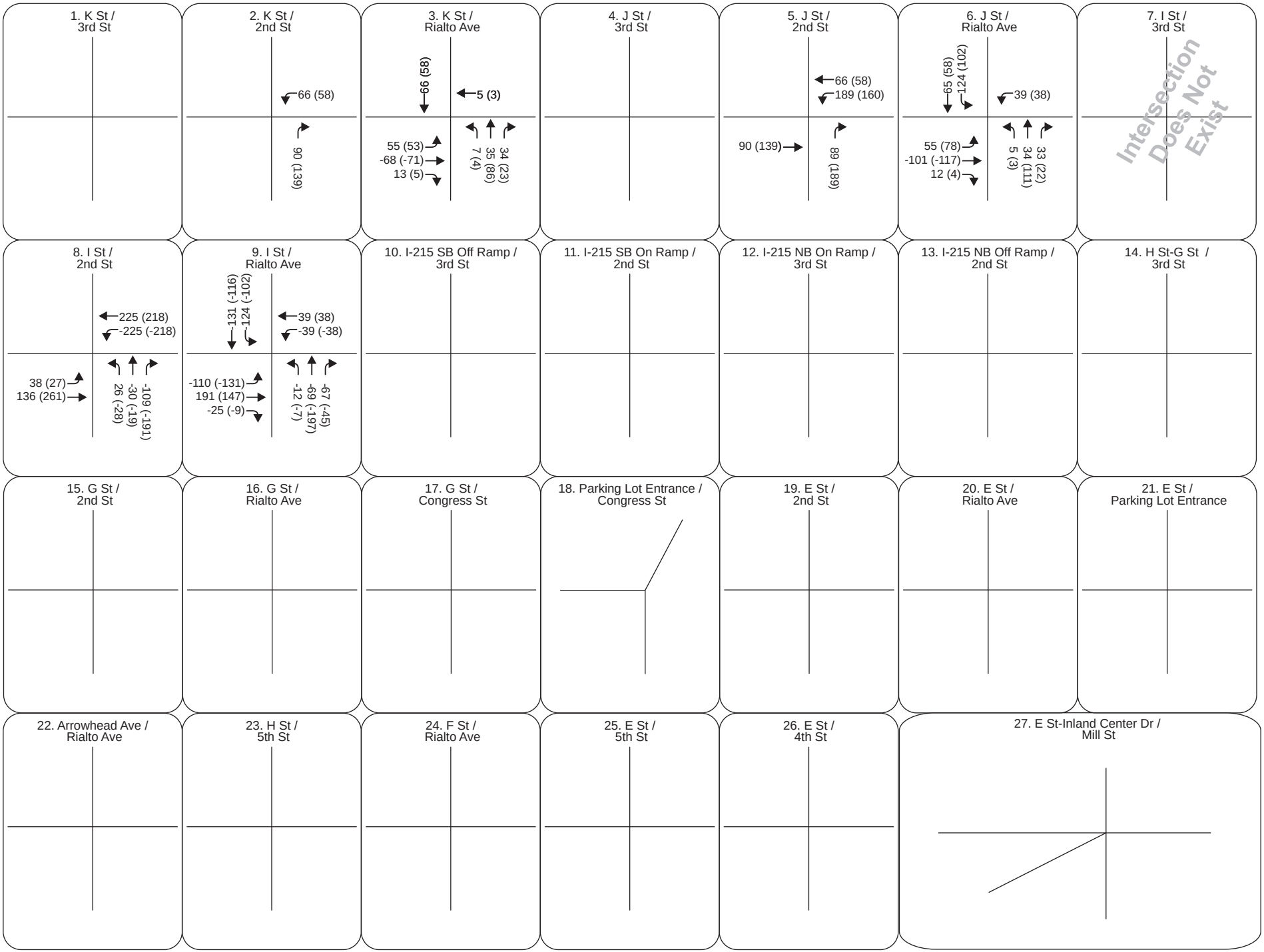

ITERIS

Downtown San Bernardino Passenger Rail Project
City of San Bernardino

FIGURE 9
2035 I Street Redistribution Volumes

Q:\2010\16\Jobs\J10-1606 Redlands First Mile\Gra\Revision_Apr2012\With 3rd St Closure\Figures 7-23.cdr

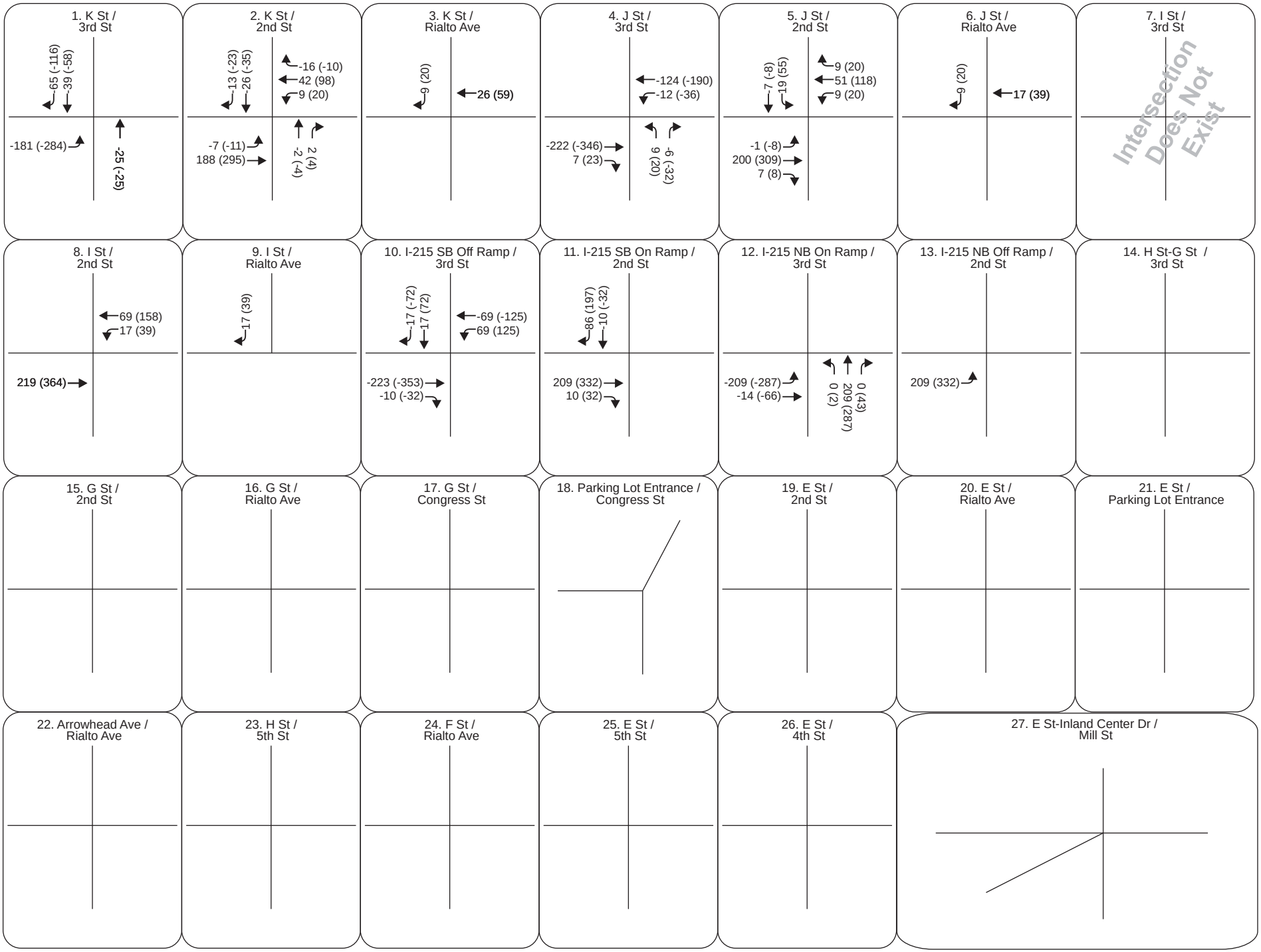

ITERIS

Downtown San Bernardino Passenger Rail Project
City of San Bernardino

FIGURE 10
2035 3rd Street Redistribution Volumes

Q:\2010\16\Jobs\J10-1606 Redlands First Mile\Gra\Revision_Apr2012\With 3rd St Closure\Figures 7-23.cdr

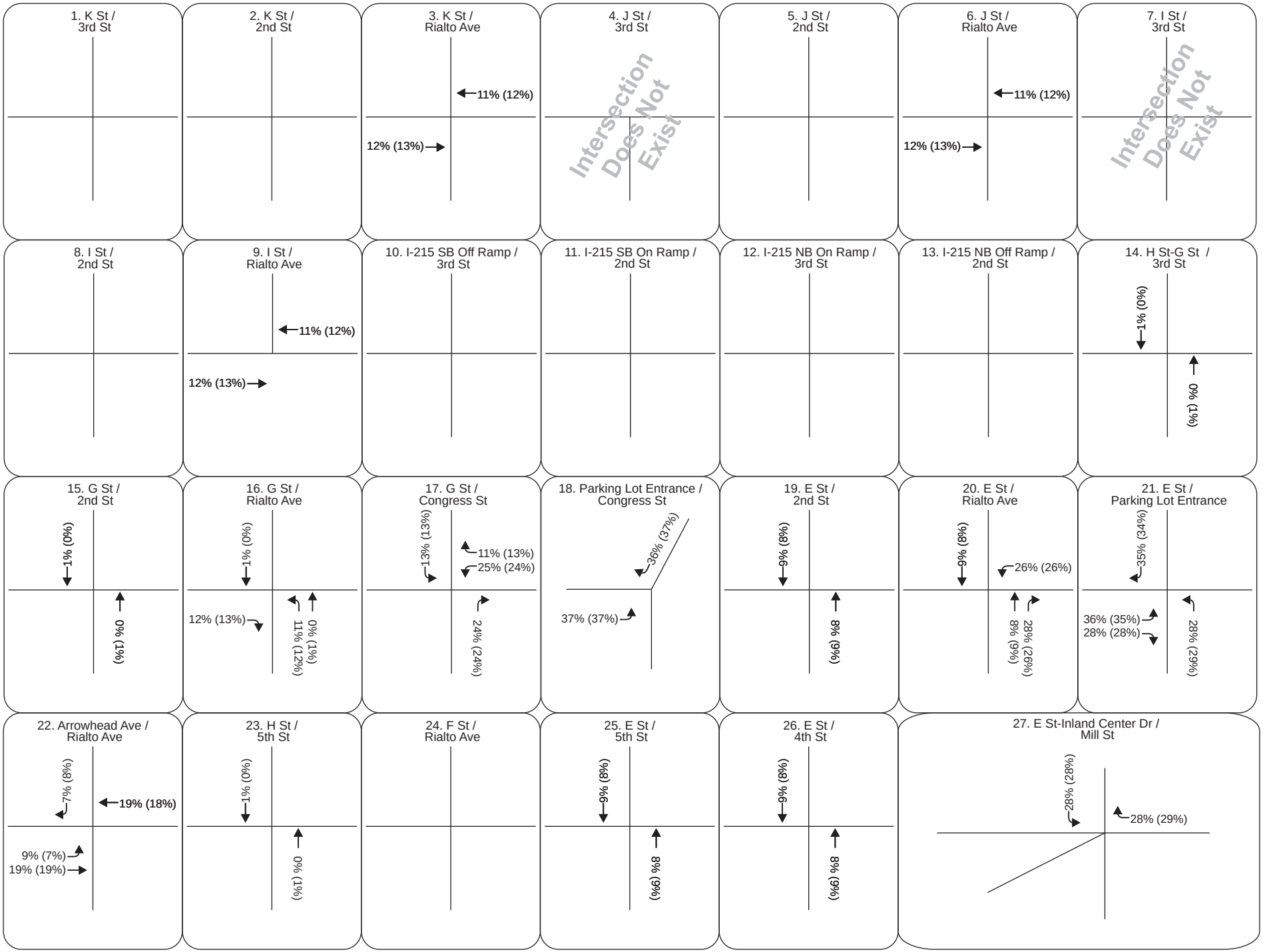

ITERIS

Downtown San Bernardino Passenger Rail Project
City of San Bernardino

FIGURE 11
Parking Lot Trip Distribution

Q:\2010\16\Jobs\J10-1606 Redlands First Mile\Gra\Revision_Apr2012\With 3rd St Closure\Figures 7-23.cdr

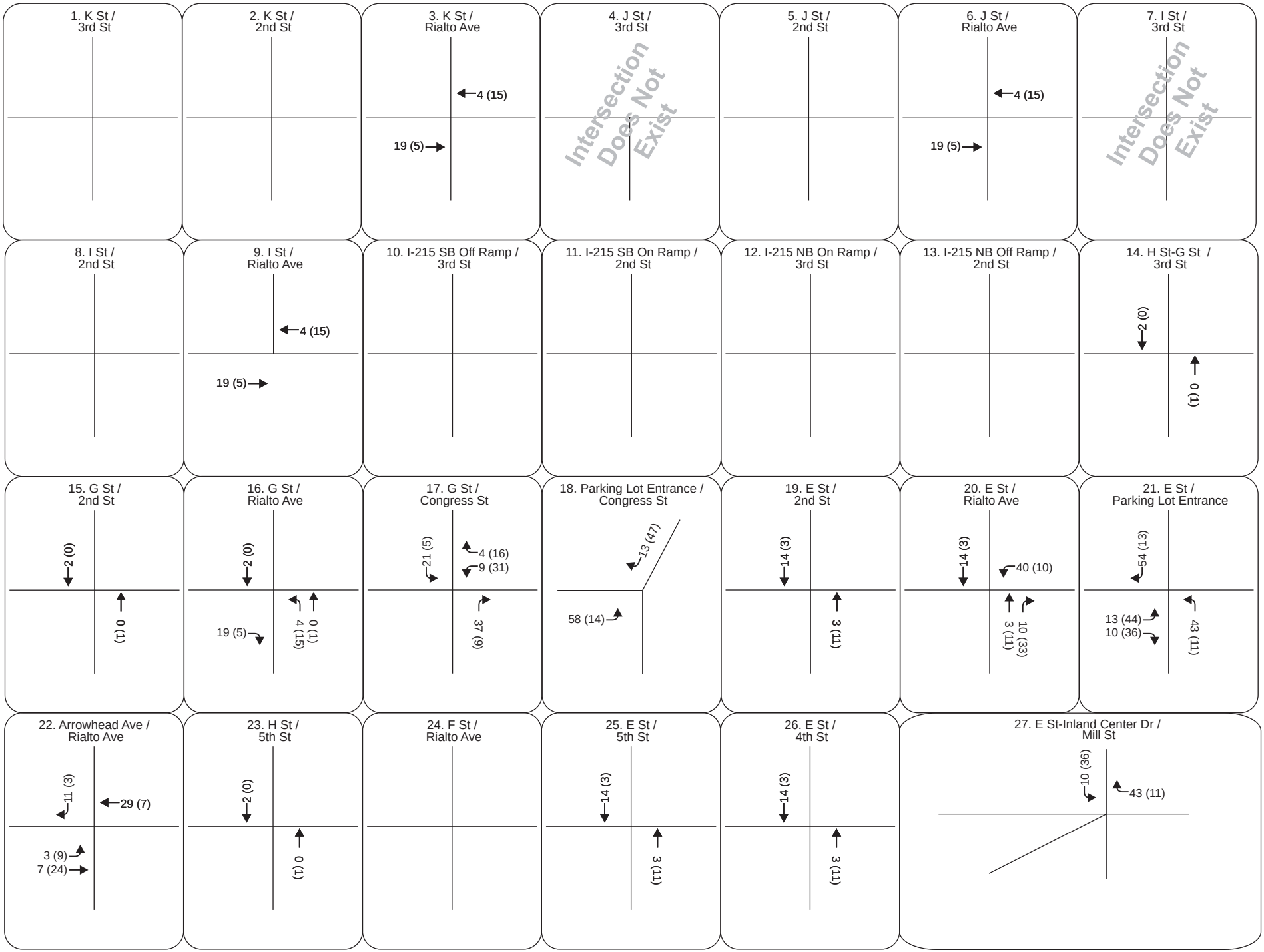

Downtown San Bernardino Passenger Rail Project
City of San Bernardino

FIGURE 12
Additional Trips Generated by the Proposed Parking Lot

Q:\2010\16\Jobs\J10-1606 Redlands First Mile\Gra\Revision_Apr2012\With 3rd St Closure\Figures 7-23.cdr

The Bus Facility will include up to 22 on-site bus bays and 12,000 square feet of office building. These bays will be used by Omnitrans buses operating in the City. The bus routes which will use the transit center include: Route 1, Route 2, Route 3, Route 4, Route 5, Route 7, Route 8, Route 9, Route 10, Route 11, Route 14, Route 15, Route 215, Victor Valley Transit Authority (VVTA), Mountain Area Regional Transit Authority (MARTA), and sbX E Street and sbX Future bus routes. All the bus routes and schedules used in this study are included in **Appendix C**. The total number of buses during the peak hours was calculated using the headways of each individual bus route and these buses were assigned to the roadway network in the study area based on their scheduled routes. The headways and total number of buses in the peak hours for each of these routes are summarized in **Table 2**. The detailed bus volume development calculations are included in **Appendix B**. The assignment of new bus trips (in PCE) at each of the study intersections during the weekday AM and PM peak hours is illustrated in **Figure 13**.

TABLE 2: BUS TRIP GENERATION

Omnitrans Route #	Route Name	Direction	Headway (minutes)		# of Buses in Peak Hour		PCE in Peak Hour (PCE Factor=2.0)	
			AM	PM	AM	PM	AM	PM
sbX Future	Omnitrans articulated bus expansion (sbX)		10	10	6	6	12	12
sbX E St	Cal State - E Street - Loma Linda (Articulated bus)		10	10	6	6	12	12
1	ARMC - San Bernardino - Del Rosa	NB	15	15	4	4	8	8
		SB	15	15	4	4	8	8
2	Cal State - E Street - Loma Linda	NB	15	15	4	4	8	8
		SB	15	15	4	4	8	8
3	Baseline - Highland - San Bernardino CCW	CCW	20	15	3	4	6	8
4	Baseline - Highland - San Bernardino CW	CW	20	15	3	4	6	8
5	San Bernardino - Del Rosa - Cal State	NB	35	35	2	2	4	4
		SB	35	35	2	2	4	4
7	N. San Bernardino - Sierra Way - San Bernardino	NB	30	30	2	2	4	4
		SB	30	30	2	2	4	4
8	San Bernardino - Mentone - Yucaipa (interlined)	EB	60	60	1	1	2	2
		WB	60	60	1	1	2	2
9	San Bernardino - Redlands - Yucaipa (interlined)	EB	60	60	1	1	2	2
		WB	60	60	1	1	2	2
10	Fontana - Baseline - San Bernardino	EB	30	30	2	2	4	4
		WB	30	30	2	2	4	4
11	San Bernardino - Muscoy - Cal State	NB	60	60	1	1	2	2
		SB	60	60	1	1	2	2
14	Fontana - Foothill - San Bernardino	EB	15	15	4	4	8	8
		WB	15	15	4	4	8	8
15	Fontana - San Bndo/Highland - Redlands	EB	30	30	2	2	4	4
		WB	30	30	2	2	4	4
215	San Bernardino - Riverside	NB	20	30	3	2	6	4
		SB	25	25	3	3	6	6
	MARTA (Big Bear)	EB			1	1	2	2
		WB			0	0	0	0
	MARTA (Arrowhead)	EB			1	1	2	2
		WB			0	0	0	0
	TOTAL				**72**	**73**	**144**	**146**

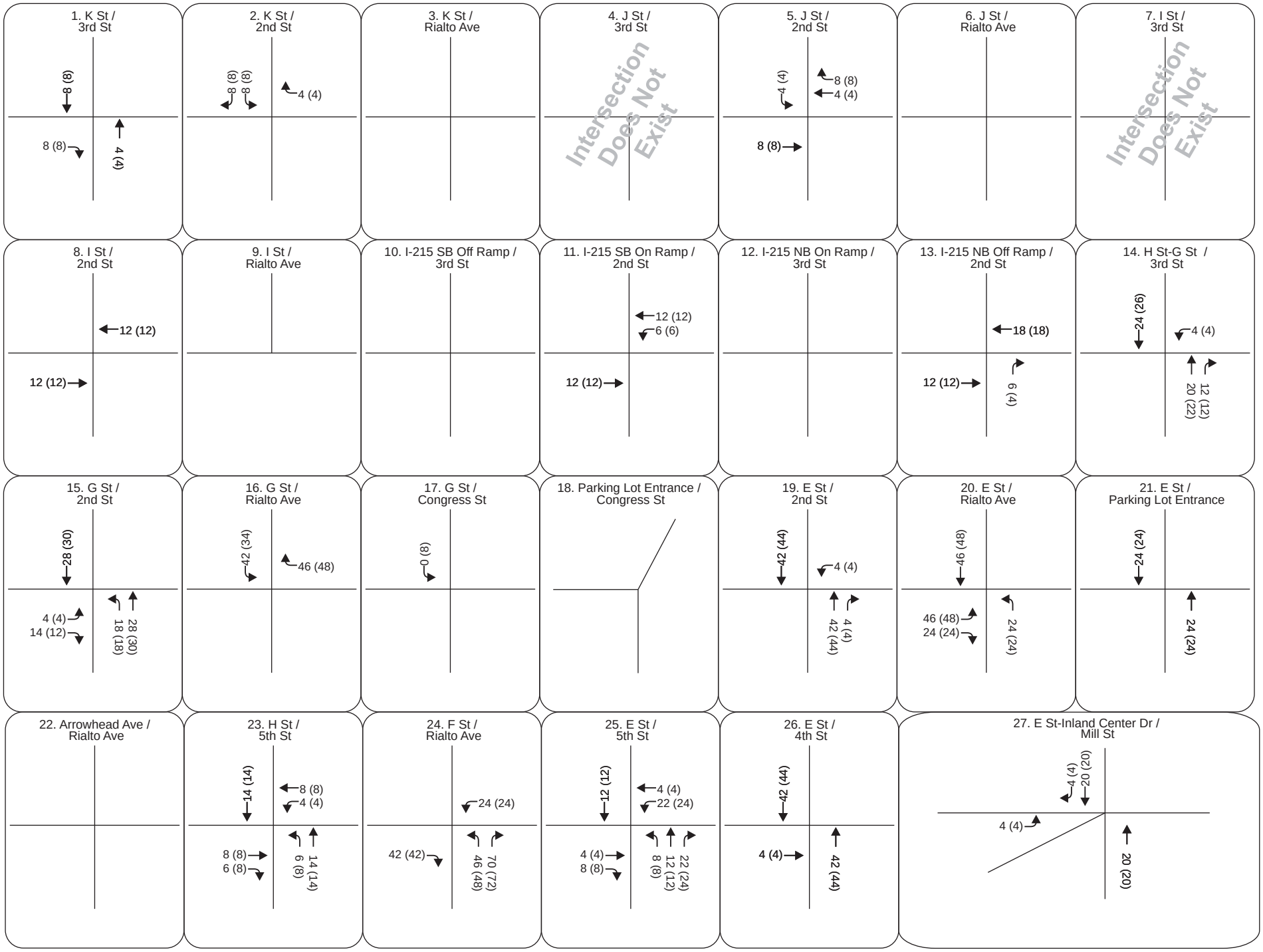

Downtown San Bernardino Passenger Rail Project

City of San Bernardino

FIGURE 13

Additional Bus Trips (PCE) Generated by the Proposed Omnitrans Bus Facility

Q:\2010\16\Jobs\J10-1606 Redlands First Mile\Gra\Revision_Apr2012\With 3rd St Closure\Figures 7-23.cdr

The proposed 12,000 square feet of office building will also generate additional traffic. The peak hour trip generation calculations were based on the rates published for General Office Building (Code: 710) in the ITE *Trip Generation, 8th Edition*. ITE trip generation rates and the trip generation calculations for the office building are summarized in **Table 3**. The daily trips shown in the table were based on the information from Omnitrans that there would be a maximum of twenty six employees at the office at any given time.

TABLE 3: OFFICE BUILDING TRIP GENERATION ESTIMATES

Project	Land Use Type	Size	Unit	Daily	AM Peak Hour			PM Peak Hour		
					In	Out	Total	In	Out	Total
Office	ITE Land Use Code: 710				88%	12%	1.55	17%	83%	1.49
	General Office Building	12	ksf	26	17	2	19	3	15	18

The directional distribution of the new trips generated by the office building was developed using the general traffic patterns in the study area. **Figure 14** illustrated the office trip distribution and the assignment of the new office trips at each of the study intersections during the AM and PM peak hours is illustrated in **Figure 15**.

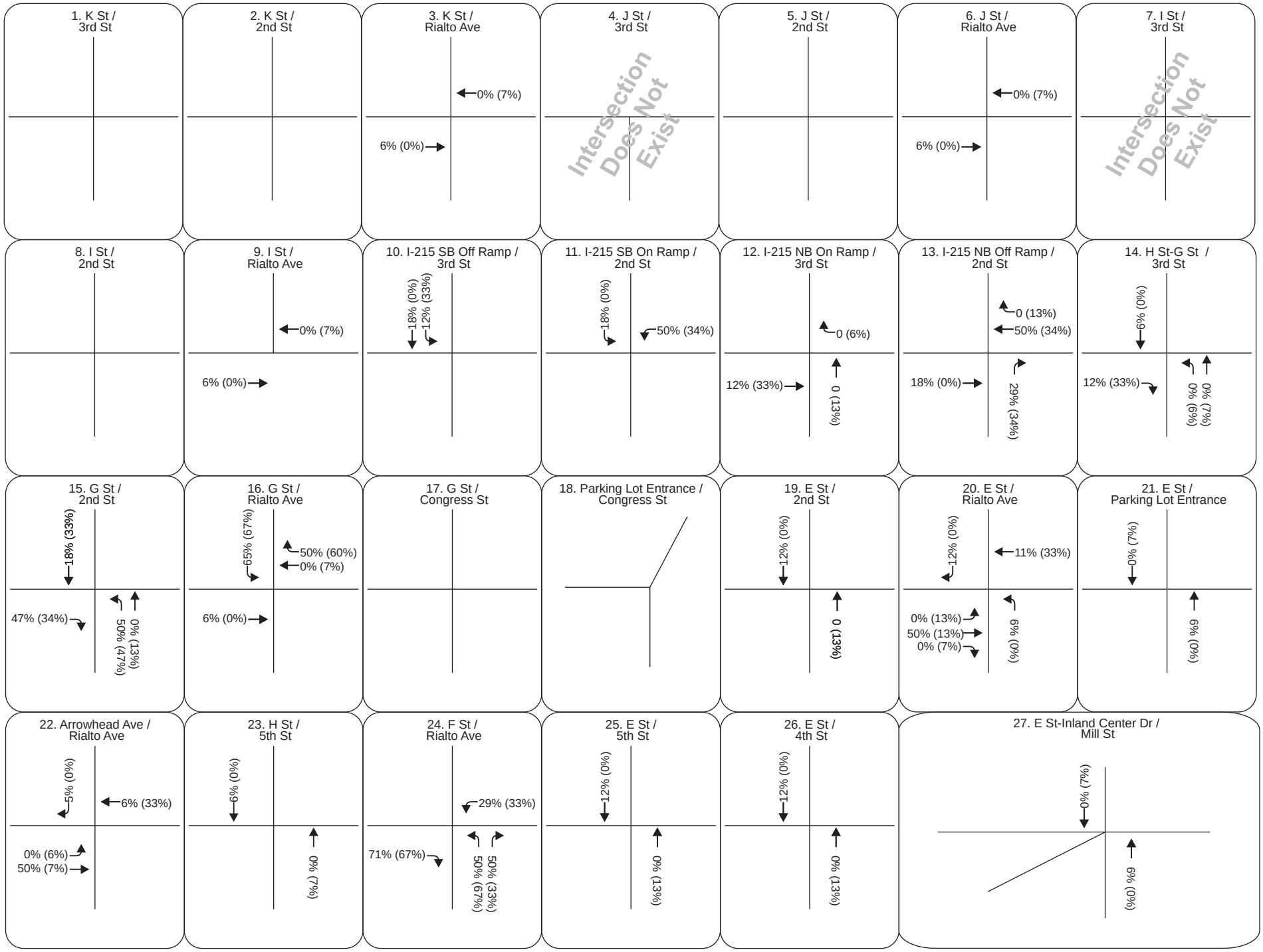

Downtown San Bernardino Passenger Rail Project
City of San Bernardino

FIGURE 14
Office Building Trip Distribution

Q:\2010\16\Jobs\J10-1606 Redlands First Mile\Gra\Revision_Apr2012\With 3rd St Closure\Figures 7-23.cdr

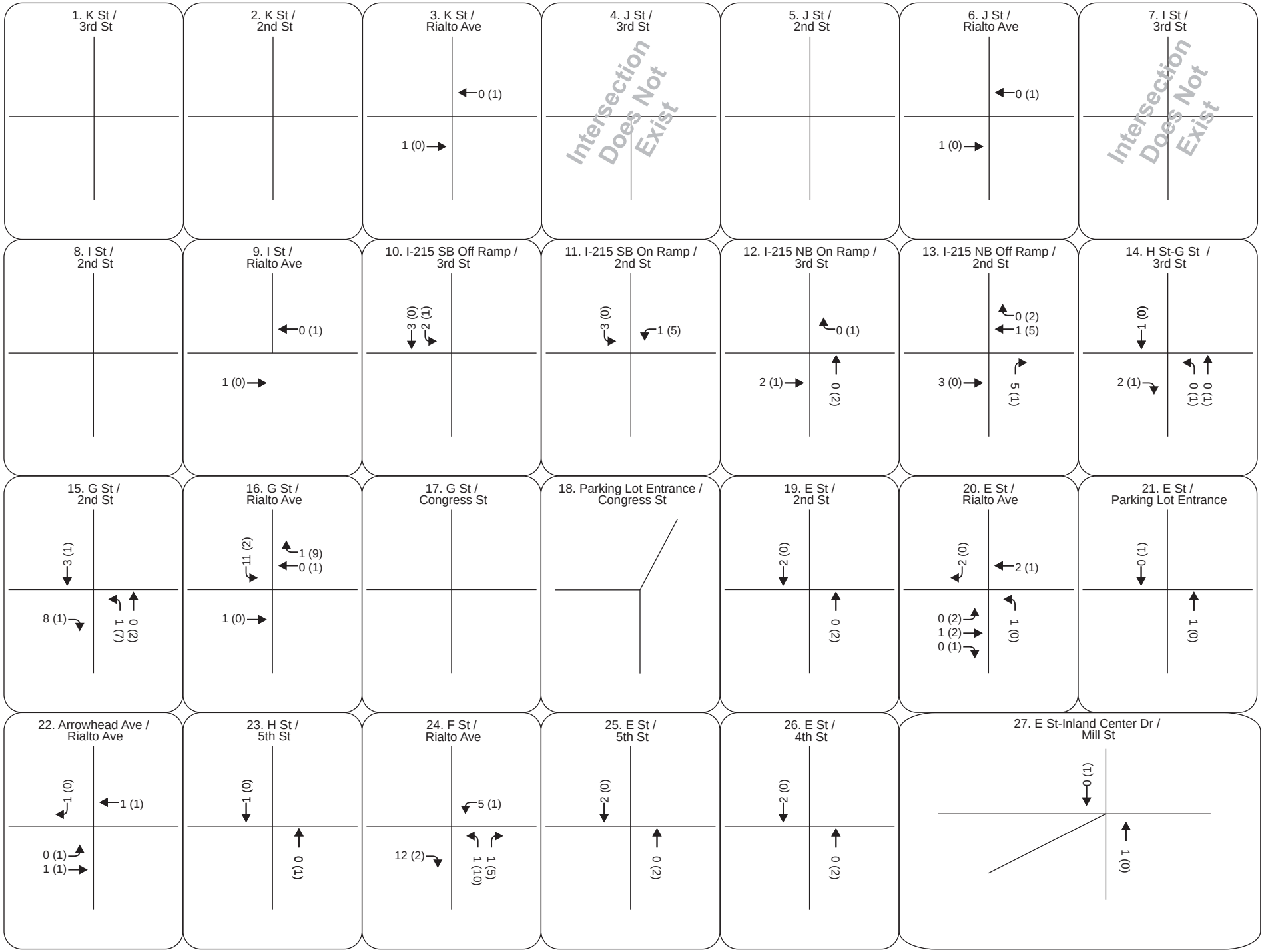

Downtown San Bernardino Passenger Rail Project
City of San Bernardino

FIGURE 15
Additional Trips Generated by the Proposed Office Building

Q:\2010\16\Jobs\J10-1606 Redlands First Mile\Gra\Revision_Apr2012\With 3rd St Closure\Figures 7-23.cdr

Forecast Year (2035) With Project Traffic Volumes

The Project includes reconstruction of rail infrastructure, grade crossing improvements at four locations, and the construction of the San Bernardino Transit Center including a parking lot and an Omnitrans Bus Facility. None of the capital improvements included in the Project are "trip generators" and hence will not generate any new traffic, except for the trips generated by the proposed Transit Center. From the perspective of the transit rider, there will be no change in service at the existing Santa Fe Depot as a result of this Project. Train frequencies and destinations will remain unchanged. With the Project, and the associated permanent street closures, traffic will redistribute itself to reach its desired destinations. To develop With Project volumes, manual adjustments have been performed on the No Project volumes to account for this redistribution and trips from the San Bernardino Transit Center (parking lot trips, bus trips, and office trips) have been added on top of the redistributed volumes. The existing conditions traffic volume counts did not show any traffic going to Congress Street east of G Street. Therefore, for the purpose of intersection analysis, background traffic of 40 trips in the AM peak hour and 50 trips in the PM peak hour are assumed to travel on Congress Street. These trips are approximately 10 percent of traffic volume on G Street during 2035 With Project conditions. This background traffic is assumed to be the same for 2014 With Project conditions also. **Figure 16** shows the year 2035 With Project peak hour volumes at the study intersections, taking into account the redistribution of traffic and added trips from the Transit Center. Volume development worksheets are in **Appendix B.**

Opening Year (2014) No Project Traffic Volumes

Opening year (2014) No Project traffic volumes were developed by interpolating between existing traffic volumes and forecast year (2035) traffic volumes. For consistency, the existing volumes were adjusted to reflect the traffic patterns as if the future I-215 ramp configuration changes exist today. This adjustment allows straightforward interpolation between year 2009 and year 2035 traffic volumes, without the need for any additional manual adjustments. Volume development worksheets are in **Appendix B.** Year 2014 No Project volumes are illustrated in **Figure 17. Figure 18** shows the redistribution of traffic due to I street closure. **Figure 19** shows the redistribution of traffic due to 3rd street closure.

Opening Year (2014) With Project Traffic Volumes

Opening year (2014) With Project traffic volumes were developed in a similar manner as the year 2035 With Project traffic volumes. Year 2014 With Project volumes are illustrated in **Figure 20.**

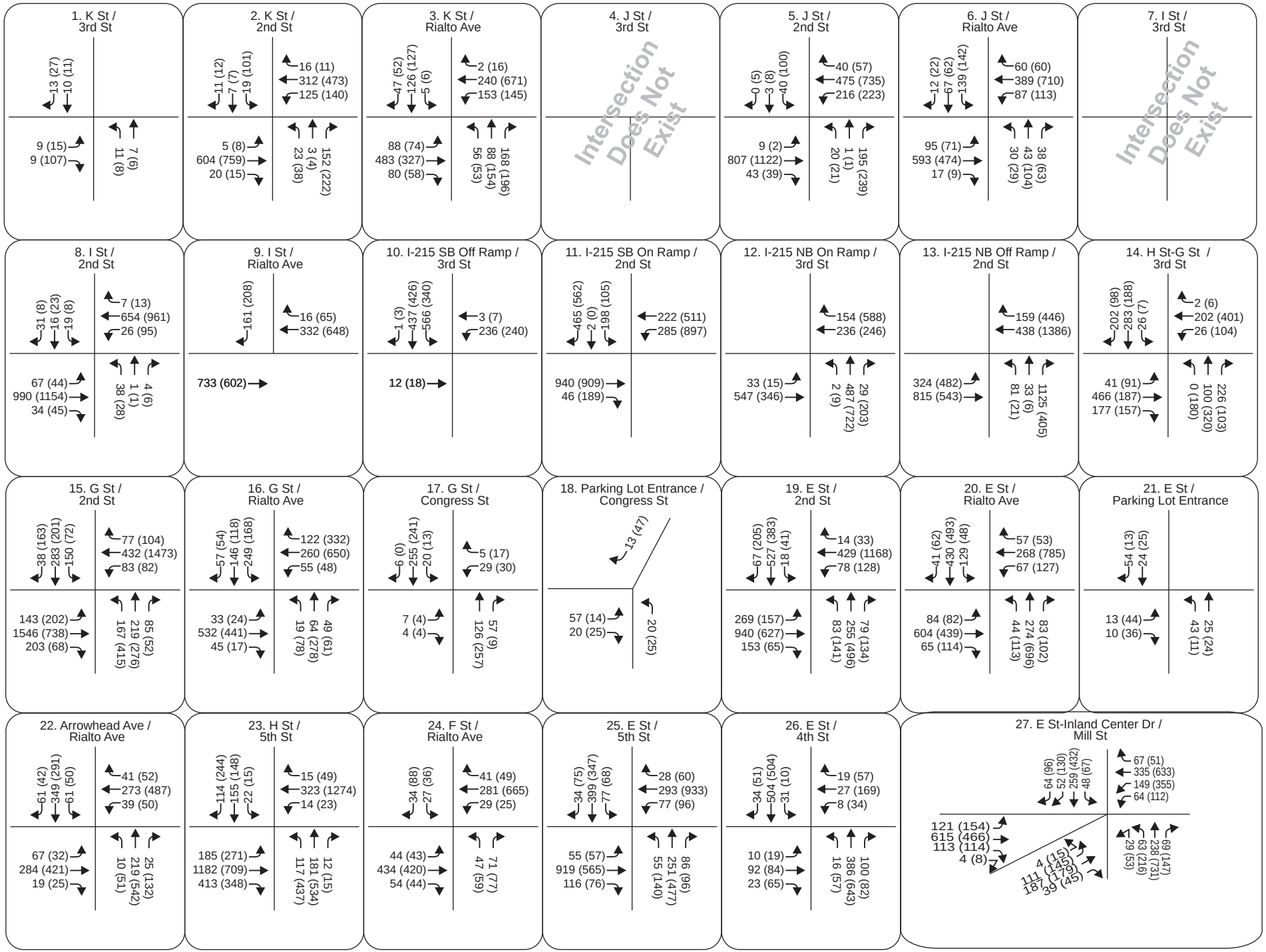

Downtown San Bernardino Passenger Rail Project
City of San Bernardino

FIGURE 16
2035 With Project Peak Hour Volumes

Q:\2010\16\Jobs\J10-1606 Redlands First Mile\Gra\Revision_Apr2012\With 3rd St Closure\Figures 7-23.cdr

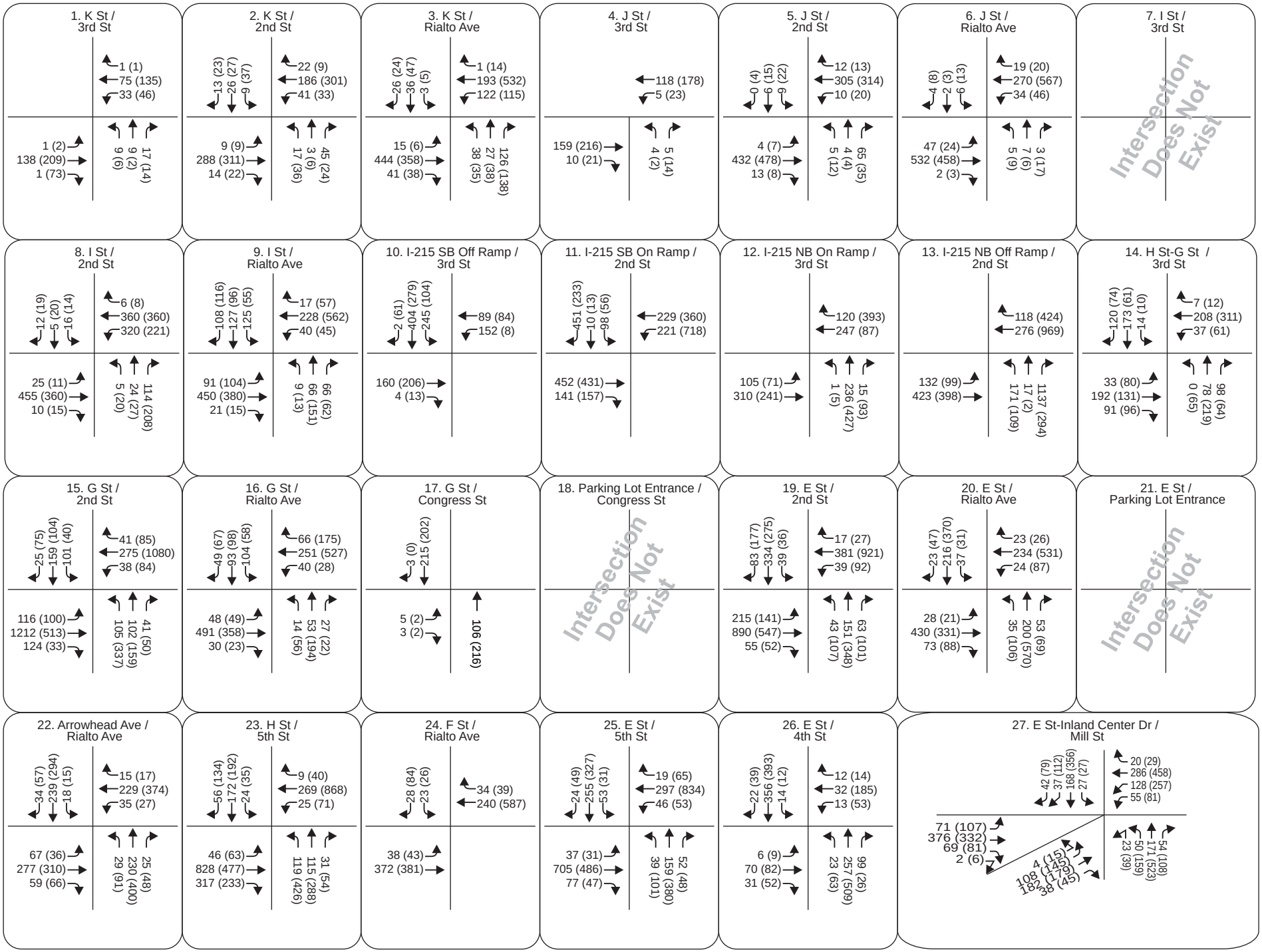

Downtown San Bernardino Passenger Rail Project
City of San Bernardino

FIGURE 17
2014 No Project Peak Hour Volumes

Q:\2010\16\Jobs\J10-1606 Redlands First Mile\Gra\Revision_Apr2012\With 3rd St Closure\Figures 7-23.cdr

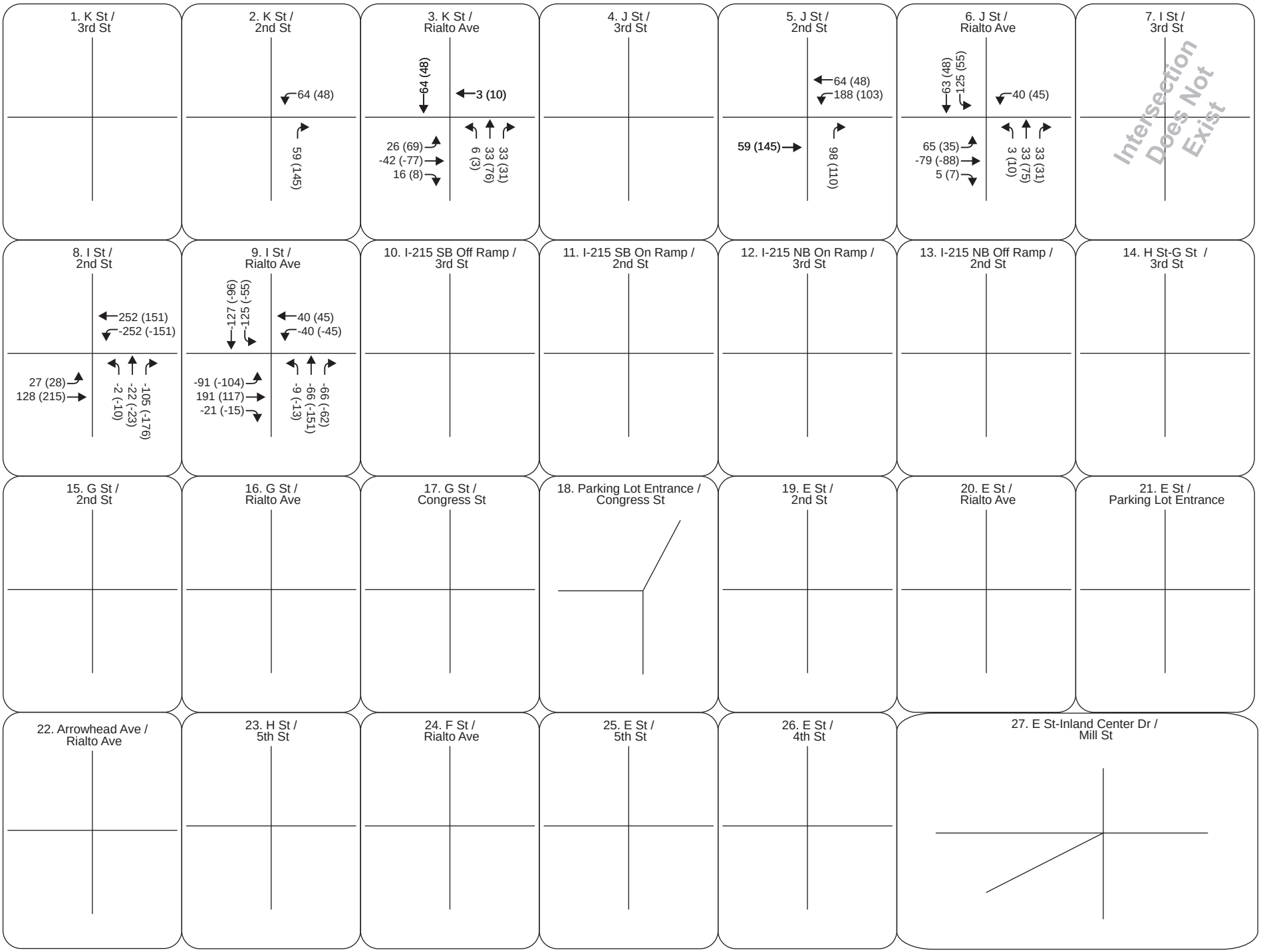

ITERIS

Downtown San Bernardino Passenger Rail Project
City of San Bernardino

FIGURE 18
2014 I Street Redistribution Volumes

Q:\2010\16\Jobs\J10-1606 Redlands First Mile\Gra\Revision_Apr2012\With 3rd St Closure\Figures 7-23.cdr

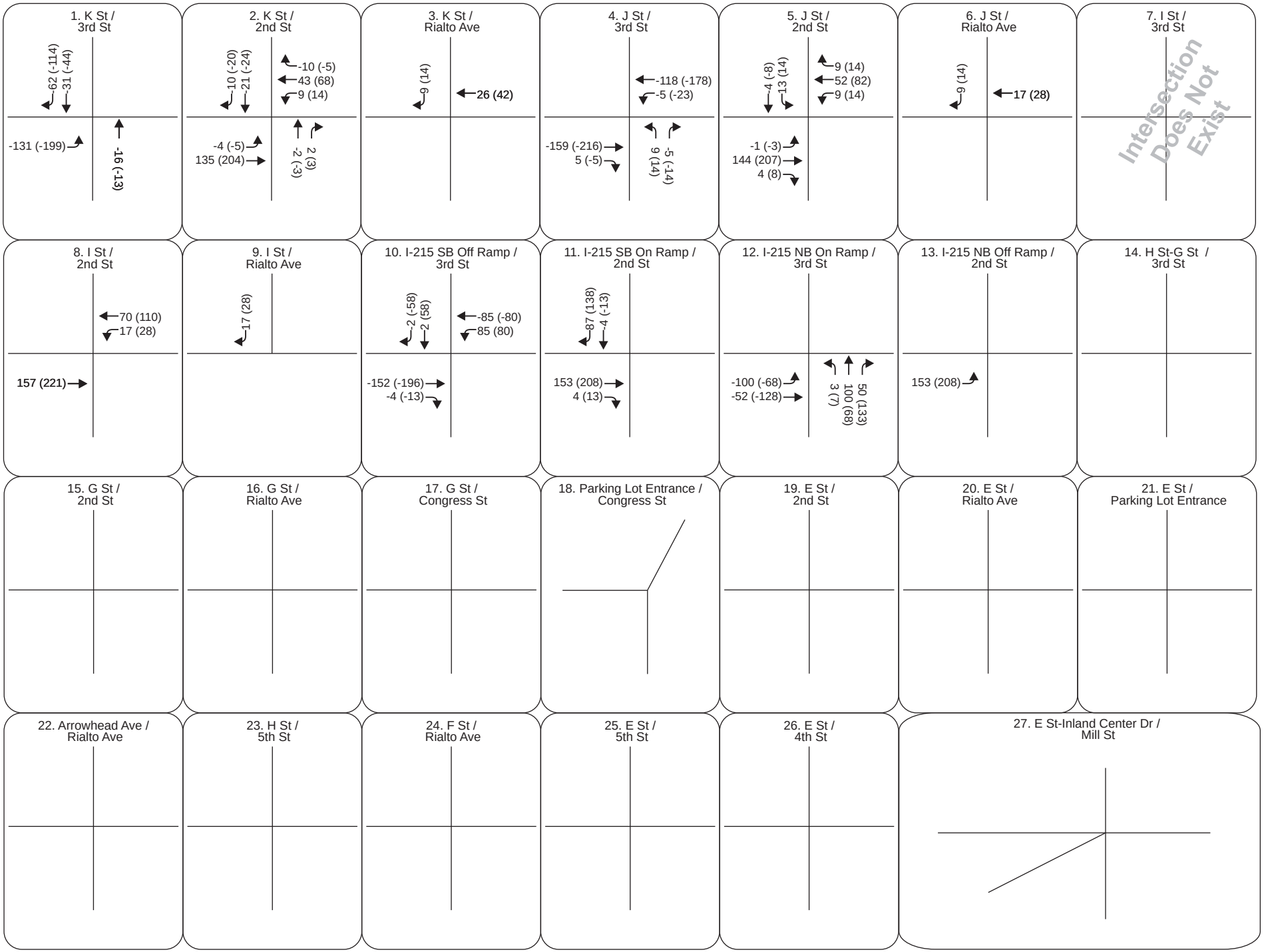

ITERIS

Downtown San Bernardino Passenger Rail Project

City of San Bernardino

FIGURE19

2014 3rd Street Redistribution Volumes

Q:\2010\16\Jobs\J10-1606 Redlands First Mile\Gra\Revision_Apr2012\With 3rd St Closure\Figures 7-23.cdr

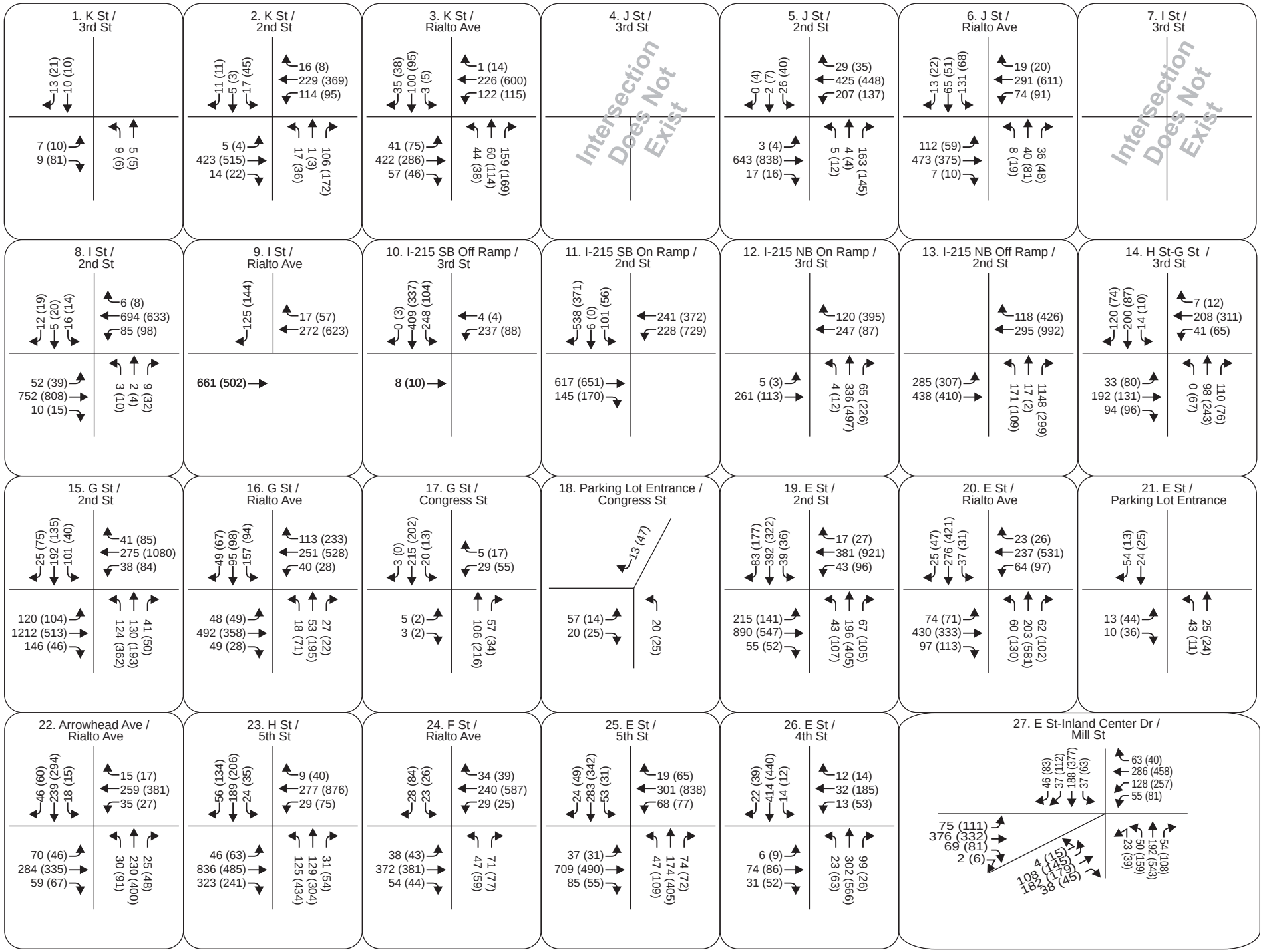

Downtown San Bernardino Passenger Rail Project
City of San Bernardino

FIGURE 20
2014 With Project Peak Hour Volumes

Q:\2010\16\Jobs\J10-1606 Redlands First Mile\Gra\Revision_Apr2012\With 3rd St Closure\Figures 7-23.cdr

2.3 INTERSECTION LEVEL OF SERVICE

Level of service (LOS) is a measure of the quality of operational conditions within a traffic stream, and is generally expressed in terms of such measures as speed and travel time, freedom to maneuver, traffic interruptions, and comfort and convenience. Levels range from A to F, with LOS A representing excellent (free-flow) conditions and LOS F representing extreme congestion.

The analysis of traffic operations at intersections was conducted according to the *Highway Capacity Manual* (HCM) delay methodology, which is described in the *Highway Capacity Manual,* Special Report 209 (Transportation Research Board, Washington, D.C., 2000). Under the HCM methodology, LOS is based on the average delay experienced by vehicles traveling through an intersection. The average delay methodology has been consistently applied for both signalized and unsignalized intersections. The analysis incorporates the effects of the lane geometry and signal phasing (e.g., protected or permitted left turns) at the intersection. **Table 4** presents a brief description of each level of service letter grade, as well as the range of delays associated with each grade.

The analysis was conducted using Synchro 6.0 software. However, due to the inability of the Synchro software to model stop controlled intersection with more than two through lanes, the analyses of the intersections of K Street/2nd Street, J Street/2nd Street, and Parking Lot Entrance/Congress Street have been conducted using Traffix 7.0 software.

TABLE 4: INTERSECTION LEVEL OF SERVICE DEFINITIONS

Level of Service	Description	Signalized Intersection Delay (seconds per vehicle)	Unsignalized Intersection Delay (seconds per vehicle)
A	Excellent operation. All approaches to the intersection appear quite open, turning movements are easily made, and nearly all drivers find freedom of operation.	< 10	< 10
B	Very good operation. Many drivers begin to feel somewhat restricted within platoons of vehicles. This represents stable flow. An approach to an intersection may occasionally be fully utilized and traffic queues start to form.	>10 and < 20	>10 and < 15
C	Good operation. Occasionally drivers may have to wait more than 60 seconds, and back-ups may develop behind turning vehicles. Most drivers feel somewhat restricted.	>20 and < 35	>15 and < 25
D	Fair operation. Cars are sometimes required to wait more than 60 seconds during short peaks. There are no long-standing traffic queues.	>35 and < 55	>25 and < 35
E	Poor operation. Some long-standing vehicular queues develop on critical approaches to intersections. Delays may be up to several minutes.	>55 and < 80	>35 and < 50
F	Forced flow. Represents jammed conditions. Backups form locations downstream or on the cross street may restrict or prevent movement of vehicles out of the intersection approach lanes; therefore, volumes carried are not predictable. Potential for stop and go type traffic flow.	> 80	> 50

Source: *Highway Capacity Manual*, Special Report 209, Transportation Research Board, Washington, DC, 2000.

2.4 LEVEL OF SERVICE STANDARD

All the ramp intersections fall under the jurisdiction of California Department of Transportation. The remaining study intersections fall under the jurisdiction of City of San Bernardino. Both the jurisdictions' level of service standard is LOS D. Intersections operating at LOS E or F are considered unsatisfactory.

3.0 EXISTING CONDITIONS

Previously referenced **Figure 6** shows the existing turning movement volumes at each study intersection during the AM and PM peak hours. The intersection geometrics for the existing conditions are illustrated in **Figure 21**. A level of service analysis was conducted to evaluate existing intersection operations. Levels of service calculation worksheets are included in **Appendix D**. **Table 5** summarizes the existing level of service at these intersections. Results show that all study intersections currently operate at satisfactory levels of service.

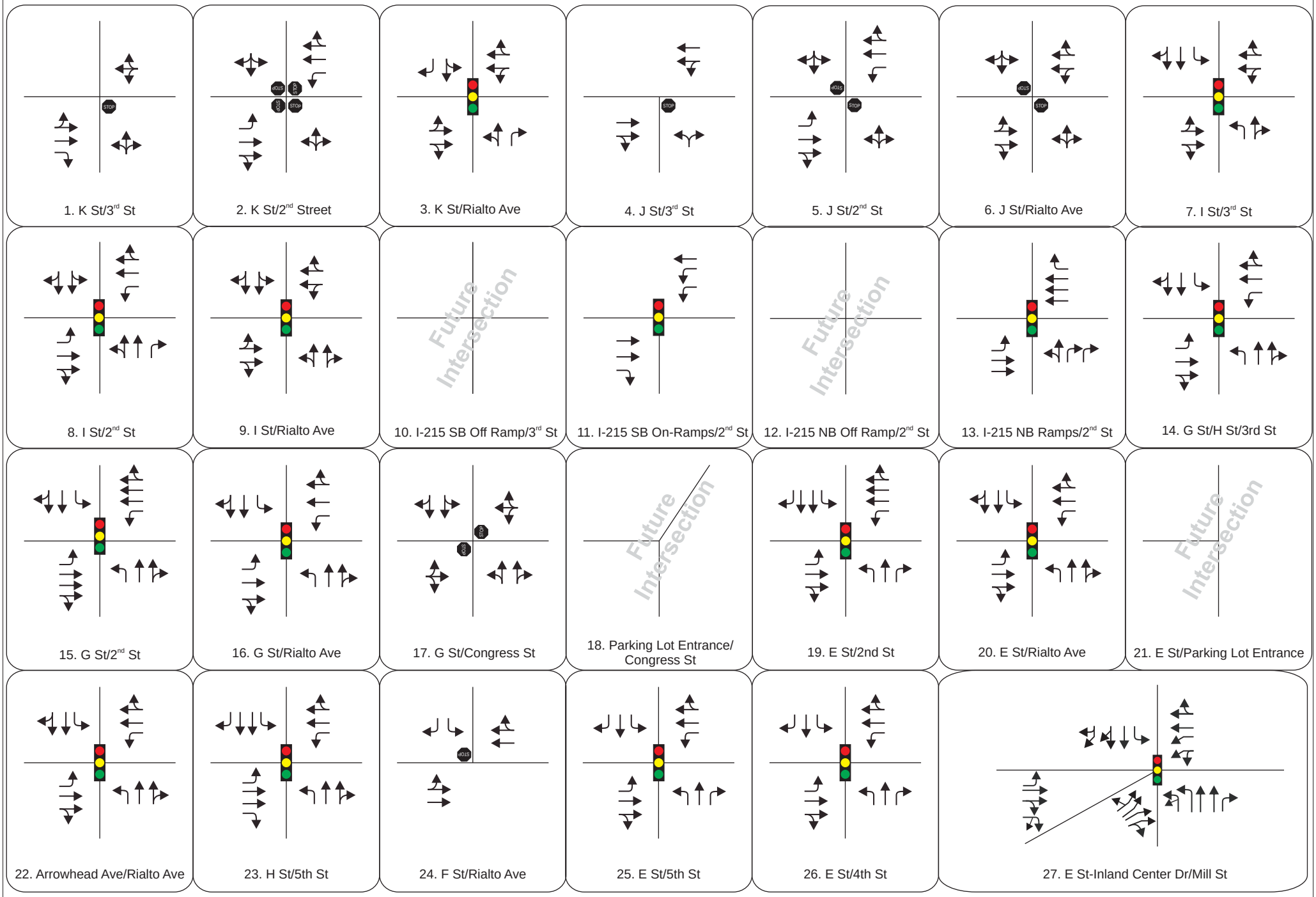

ITERIS

Downtown San Bernardino Passenger Rail Project
City of San Bernardino

FIGURE 21
Existing Lane Geometry

Q:\2010\16\Jobs\J10-1606 Redlands First Mile\Gra\Revision_Apr2012\With 3rd St Closure\Figures 7-23.cdr

TABLE 5: EXISTING (2009/2010/2011) PEAK HOUR LEVELS OF SERVICE

Intersection Name	Control	AM Peak Hour			PM Peak Hour		
		LOS	Delay (Sec.)	V/C	LOS	Delay (Sec.)	V/C
1. K St and 3rd St	2WSC	A	2.9	N/A	A	1.6	N/A
2. K St and 2nd St	AWSC	A	8.5	0.20	A	9.3	0.24
3. K St and Rialto Ave	Signal	B	18.7	0.25	C	20.9	0.31
4. J St and 3rd St	2WSC	A	0.6	N/A	A	0.9	N/A
5. J St and 2nd St	2WSC	A	1.1	N/A	A	1.1	N/A
6. J St and Rialto Ave	2WSC	A	1.3	N/A	A	1.5	N/A
7. I St and 3rd St	Signal	B	10.9	0.18	B	11.5	0.14
8. I St and 2nd St	Signal	B	14.1	0.25	B	14.2	0.20
9. I St and Rialto Ave	Signal	C	21.2	0.29	C	20.3	0.26
10. I-215 SB Off Ramp and 3rd St	Future Intersection						
11. I-215 SB On Ramp and 2nd St	Signal	A	8.3	0.22	B	10.3	0.42
12. I-215 NB On Ramp and 3rd S	Future Intersection						
13. I-215 NB Ramps and 2nd St	Signal	C	20.1	0.41	C	21.1	0.47
14. G St and 3rd St	Signal	C	26.6	0.17	B	19.9	0.21
15. G St and 2nd St	Signal	C	25.2	0.41	C	27.6	0.48
16. G St and Rialto Ave	Signal	B	13.1	0.27	B	12.2	0.28
17. G St and Congress St	2WSC	A	0.2	N/A	A	0.1	N/A
18. Parking Lot Entrance and Congress St	Future Intersection						
19. E St and 2nd St	Signal	C	23.4	0.55	C	28.5	0.68
20. E St and Rialto Ave	Signal	C	22.4	0.30	B	19.1	0.41
21. E St and Parking Lot Entrance	Future Intersection						
22. Arrowhead Ave and Rialto Ave	Signal	B	13.0	0.21	B	14.1	0.30
23. H St and 5th St	Signal	C	20.6	0.48	C	25.9	0.70
24. F St and Rialto Ave	1WSC	A	1.3	N/A	A	1.6	N/A
25. E St and 5th St	Signal	B	11.3	0.46	B	11.5	0.55
26. E St and 4th St	Signal	C	26.0	0.40	C	26.4	0.50
27. E St-Inland Center Dr and Mill St	Signal	D	35.7	0.45	D	39.2	0.59

Notes:
LOS = Level of Service, Delay = Average Vehicle Delay (Seconds), V/C = Volume-to-Capacity Ratio
1WSC – One-Way Stop Control
2WSC - Two-Way Stop Control
AWSC - All-Way Stop Control

4.0 OPENING YEAR (2014) TRAFFIC CONDITIONS

This section analyzes the traffic conditions in the study area during the Project's opening year (2014) under No Project and With Project conditions. The opening year 2014 traffic volumes were developed as described in the "Analysis Methodology" section. The intersection geometrics for the opening year No Project conditions are illustrated in **Figure 22**. The intersection geometrics for the opening year With Project conditions are illustrated in **Figure 23**. The intersection geometrics for the opening year No Project scenario include the configuration changes due to the I-215 widening project and the sbX E Street Corridor BRT project. The intersection geometrics for the opening year With Project scenario include the configuration changes due to the following proposed street reconfigurations as part of this Project:

- 3rd Street will be closed between J Street and the rail line, eliminating the grade crossing. The intersection of 3rd Street and J Street will be reconfigured as a "dog leg".
- I Street at Rialto Avenue will be converted to a cul-de-sac on the south side. The north leg of the intersection will be converted to a right-in/right out intersection. The existing traffic signal at this intersection will be removed and replaced with a stop sign.
- The intersection of K Street/3rd Street will be reconfigured so that 3rd Street becomes the west leg of the intersection forming a T-intersection with K Street. The driveway to the Santa Fe Depot south parking lot will be reconfigured to include an exclusive northbound left-turn lane.
- The intersection of K Street/2nd Street will be reconfigured to include an exclusive southbound left-turn lane.
- The intersection of I Street/2nd Street will be restriped to include an exclusive southbound right-turn lane.

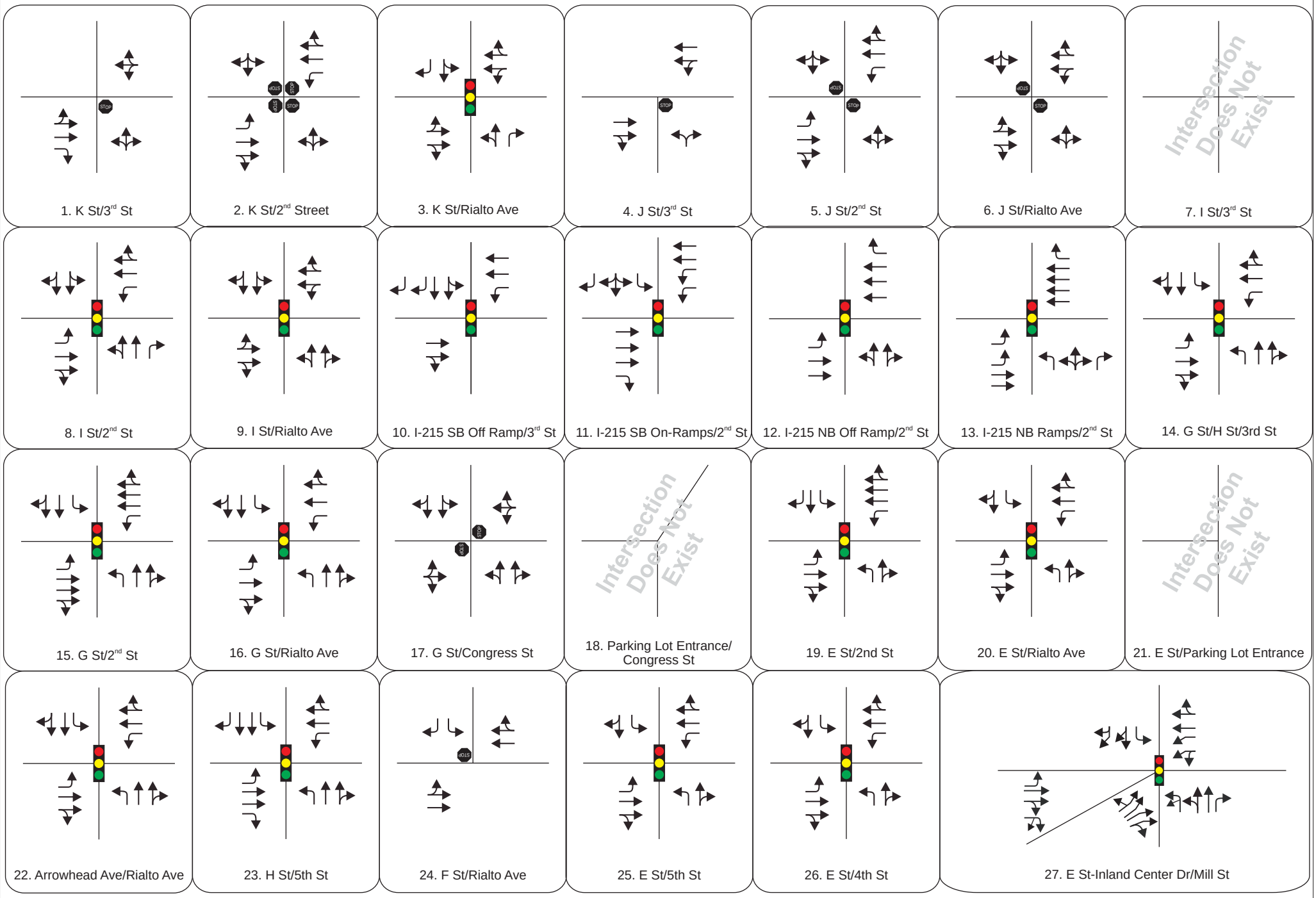

ITERIS

Downtown San Bernardino Passenger Rail Project
City of San Bernardino

FIGURE 22
Year 2014 and Year 2035 No Project Lane Geometry

Q:\2010\16\Jobs\J10-1606 Redlands First Mile\Gra\Revision_Apr2012\With 3rd St Closure\Figures 7-23.cdr

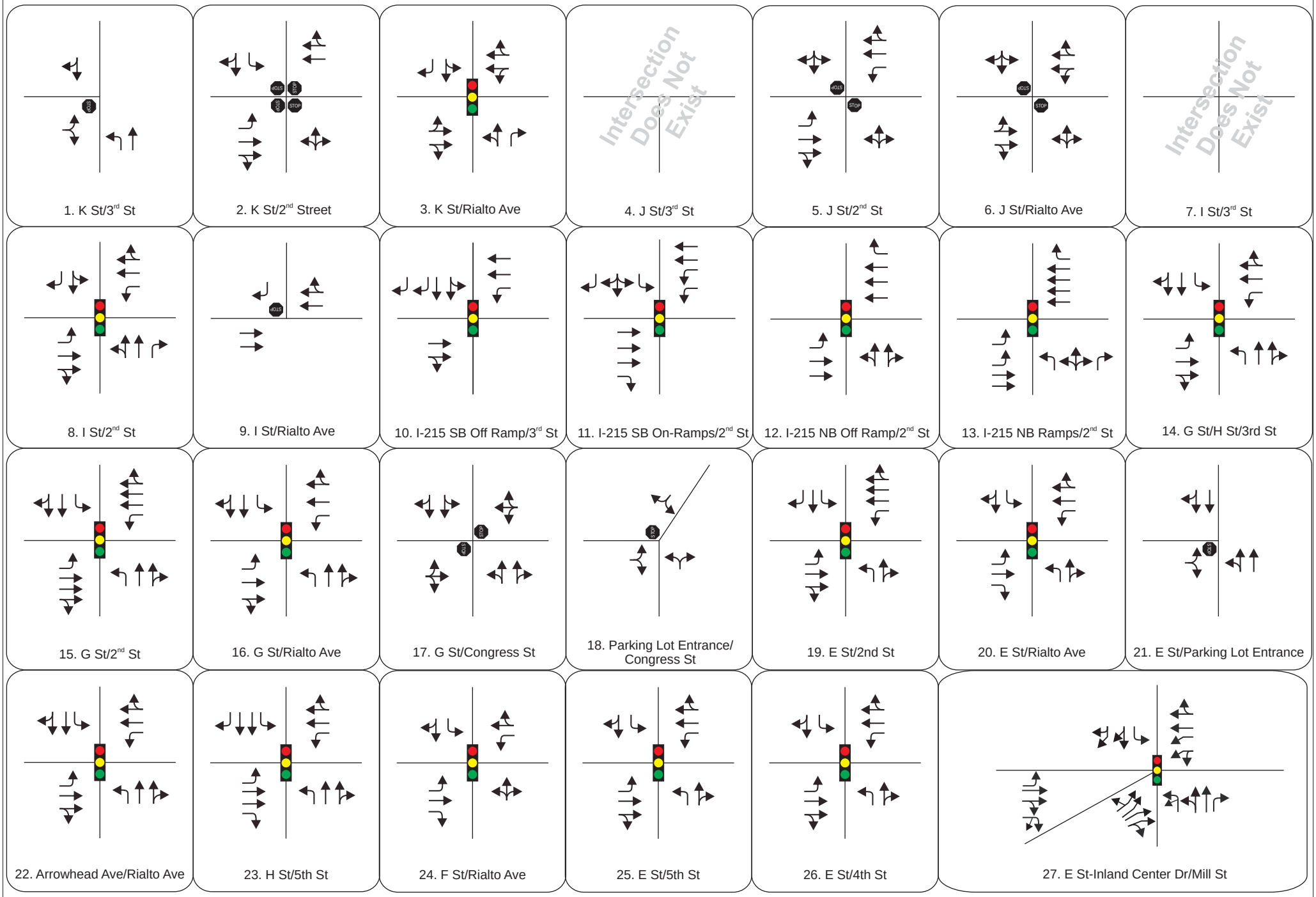

ITERIS

Downtown San Bernardino Passenger Rail Project
City of San Bernardino

FIGURE 23
Year 2014 and Year 2035 With Project Lane Geometry

Q:\2010\16\Jobs\J10-1606 Redlands First Mile\Gra\Revision_Apr2012\With 3rd St Closure\Figures 7-23.cdr

4.1 YEAR 2014 NO PROJECT CONDITIONS

Previously referenced **Figure 17** shows the opening year 2014 No Project turning movement volumes at each study intersection during the AM and PM peak hours. A level of service analysis was conducted to evaluate opening year No Project intersection operations. Levels of service calculation worksheets are included in **Appendix D**. **Table 6** summarizes the resulting levels of service at these intersections. Results show that all study intersections are projected to operate at satisfactory levels of service.

TABLE 6: YEAR 2014 NO PROJECT PEAK HOUR LEVELS OF SERVICE

Intersection Name	Control	AM Peak Hour			PM Peak Hour		
		LOS	Delay (Sec.)	V/C	LOS	Delay (Sec.)	V/C
1. K St and 3rd St	2WSC	A	2.2	N/A	A	1.3	N/A
2. K St and 2nd St	AWSC	A	8.8	0.23	A	9.7	0.27
3. K St and Rialto Ave	Signal	B	19.1	0.27	B	17.7	0.33
4. J St and 3rd St	2WSC	A	0.4	N/A	A	0.8	N/A
5. J St and 2nd St	2WSC	A	1.4	N/A	A	1.7	N/A
6. J St and Rialto Ave	2WSC	A	1.5	N/A	A	1.6	N/A
7. I St and 3rd St	Intersection does not exist						
8. I St and 2nd St	Signal	B	10.8	0.25	B	15.0	0.21
9. I St and Rialto Ave	Signal	C	21.5	0.30	C	21.1	0.28
10. I-215 SB Off Ramp and 3rd St	Signal	C	27.9	0.38	C	21.5	0.24
11. I-215 SB On Ramp and 2nd St	Signal	B	18.1	0.26	B	18.0	0.43
12. I-215 NB On Ramp and 3rd S	Signal	B	19.2	0.21	C	23.9	0.42
13. I-215 NB Ramps and 2nd St	Signal	B	17.9	0.46	B	16.5	0.30
14. G St and 3rd St	Signal	C	20.3	0.21	C	20.8	0.25
15. G St and 2nd St	Signal	C	24.5	0.48	C	28.8	0.59
16. G St and Rialto Ave	Signal	B	13.2	0.29	A	8.1	0.31
17. G St and Congress St	2WSC	A	0.2	N/A	A	0.1	N/A
18. Parking Lot Entrance and Congress St	Intersection does not exist						
19. E St and 2nd St	Signal	C	26.1	0.71	C	29.6	0.77
20. E St and Rialto Ave	Signal	C	24.0	0.42	B	18.6	0.64
21. E St and Parking Lot Entrance	Intersection does not exist						
22. Arrowhead Ave and Rialto Ave	Signal	B	11.6	0.21	B	11.9	0.32
23. H St and 5th St	Signal	C	21.3	0.43	C	25.5	0.77
24. F St and Rialto Ave	1WSC	A	1.3	N/A	A	1.6	N/A
25. E St and 5th St	Signal	C	20.3	0.48	B	19.0	0.61
26. E St and 4th St	Signal	B	18.9	0.39	B	16.3	0.46
27. E St-Inland Center Dr and Mill St	Signal	C	30.9	0.56	D	38.5	0.79

Notes:

LOS = Level of Service, Delay = Average Vehicle Delay (Seconds), V/C = Volume-to-Capacity Ratio
1WSC – One-Way Stop Control
2WSC - Two-Way Stop Control
AWSC - All-Way Stop Control

4.2 YEAR 2014 WITH PROJECT CONDITIONS

Previously referenced **Figure 20** shows the opening year 2014 With Project turning movement volumes at each study intersection during the AM and PM peak hours**.** A level of service analysis was conducted to evaluate opening year With Project intersection operations. Levels of service calculation worksheets are included in **Appendix D**. **Table 7** summarizes the resulting levels of service at these intersections. Results show that all study intersections are projected to operate at satisfactory levels of service except for one intersection.

- J Street and Rialto Avenue (LOS F in the AM and PM peak hours)

During 2014 With Project conditions, due to the additional eastbound and westbound through volumes at the J Street/2nd Street and J Street/Rialto Avenue intersections, the southbound and the northbound movements would experience fewer gaps to be able to exit the intersections and hence would experience higher delays. This results in the unsatisfactory levels of service at these intersections.

TABLE 7: YEAR 2014 WITH PROJECT PEAK HOUR LEVELS OF SERVICE

Intersection Name	Control	AM Peak Hour			PM Peak Hour		
		LOS	Delay (Sec.)	V/C	LOS	Delay (Sec.)	V/C
1. K St and 3rd St	2WSC	A	3.8	N/A	A	6.3	N/A
2. K St and 2nd St	AWSC	B	11.3	0.39	C	15.4	0.56
3. K St and Rialto Ave	Signal	B	19.9	0.35	B	19.0	0.44
4. J St and 3rd St	2WSC	A	4.5	N/A	A	4.7	N/A
5. J St and 2nd St	2WSC	A	4.7	N/A	A	6.3	N/A
6. J St and Rialto Ave	2WSC	**F**	**90.4**	**N/A**	**F**	**49.1**	**N/A**
7. I St and 3rd St	Intersection does not exist						
8. I St and 2nd St	Signal	A	9.1	0.27	A	8.5	0.28
9. I St and Rialto Ave	1WSC	A	1.1	N/A	A	1.3	N/A
10. I-215 SB Off Ramp and 3rd St	Signal	C	33.9	0.39	C	25.7	0.24
11. I-215 SB On Ramp and 2nd St	Signal	B	17.1	0.31	B	18.7	0.49
12. I-215 NB On Ramp and 3rd S	Signal	C	23.4	0.22	C	29.8	0.40
13. I-215 NB Ramps and 2nd St	Signal	B	19.9	0.48	B	18.2	0.35
14. G St and 3rd St	Signal	C	20.1	0.22	C	21.0	0.26
15. G St and 2nd St	Signal	C	24.2	0.53	C	29.4	0.61
16. G St and Rialto Ave	Signal	A	9.3	0.34	A	8.6	0.32
17. G St and Congress St	2WSC	A	1.4	N/A	A	1.8	N/A
18. Parking Lot Entrance and Congress St	1WSC	A	7.6	N/A	A	7.1	N/A
19. E St and 2nd St	Signal	C	28.4	0.72	C	32.5	0.77
20. E St and Rialto Ave	Signal	C	21.7	0.63	C	22.7	0.71
21. E St and Parking Lot Entrance	1WSC	A	0.9	N/A	A	1.2	N/A
22. Arrowhead Ave and Rialto Ave	Signal	B	11.1	0.21	B	12.1	0.33
23. H St and 5th St	Signal	C	21.5	0.47	C	25.7	0.78
24. F St and Rialto Ave	Signal	B	11.7	0.29	B	10.4	0.48
25. E St and 5th St	Signal	C	20.1	0.50	B	19.2	0.64
26. E St and 4th St	Signal	B	18.8	0.45	B	17.0	0.50
27. E St-Inland Center Dr and Mill St	Signal	C	31.5	0.58	D	39.2	0.81

Notes:

LOS = Level of Service, Delay = Average Vehicle Delay (Seconds), V/C = Volume-to-Capacity Ratio
1WSC - One-Way Stop Control
2WSC - Two-Way Stop Control
AWSC - All-Way Stop Control

5.0 FORECAST YEAR (2035) TRAFFIC CONDITIONS

This section analyzes the traffic conditions in the study area during the Project's forecast year (2035) under No Project and With Project conditions. The forecast year 2035 traffic volumes were developed as described in the "Analysis Methodology" section. The intersection geometrics for the forecast year No Project conditions are the same as opening year conditions and are illustrated in previously referenced **Figure 22**. The intersection geometrics for the forecast year With Project conditions are the same as opening year conditions and are illustrated in previously referenced **Figure 23**.

5.1 YEAR 2035 NO PROJECT CONDITIONS

Previously referenced **Figure 8** shows the forecast year 2035 No Project turning movement volumes at each study intersection during the AM and PM peak hours. A level of service analysis was conducted to evaluate forecast year No Project intersection operations. Levels of service calculation worksheets are included in **Appendix D**. **Table 8** summarizes the resulting levels of service at these intersections. Results show that all study intersections are projected to operate at satisfactory levels of service.

TABLE 8: YEAR 2035 NO PROJECT PEAK HOUR LEVELS OF SERVICE

Intersection Name	Control	AM Peak Hour			PM Peak Hour		
		LOS	Delay (Sec.)	V/C	LOS	Delay (Sec.)	V/C
1. K St and 3rd St	2WSC	A	2.3	N/A	A	1.6	N/A
2. K St and 2nd St	AWSC	B	10.0	0.34	B	12.0	0.43
3. K St and Rialto Ave	Signal	B	18.2	0.31	B	18.5	0.37
4. J St and 3rd St	2WSC	A	0.6	N/A	A	1.1	N/A
5. J St and 2nd St	2WSC	A	2.3	N/A	A	4.8	N/A
6. J St and Rialto Ave	2WSC	A	2.2	N/A	A	3.3	N/A
7. I St and 3rd St	Intersection does not exist						
8. I St and 2nd St	Signal	B	12.2	0.23	B	13.2	0.23
9. I St and Rialto Ave	Signal	C	20.1	0.30	C	20.2	0.30
10. I-215 SB Off Ramp and 3rd St	Signal	C	27.9	0.50	C	26.3	0.43
11. I-215 SB On Ramp and 2nd St	Signal	B	17.2	0.37	B	18.5	0.52
12. I-215 NB On Ramp and 3rd S	Signal	B	19.2	0.32	C	27.8	0.70
13. I-215 NB Ramps and 2nd St	Signal	C	20.7	0.57	B	17.2	0.35
14. G St and 3rd St	Signal	C	20.2	0.33	C	21.2	0.33
15. G St and 2nd St	Signal	C	26.5	0.60	C	30.7	0.73
16. G St and Rialto Ave	Signal	B	13.0	0.30	A	9.3	0.36
17. G St and Congress St	2WSC	A	0.3	N/A	A	0.2	N/A
18. Parking Lot Entrance and Congress St	Intersection does not exist						
19. E St and 2nd St	Signal	C	33.7	0.80	C	33.1	0.81
20. E St and Rialto Ave	Signal	C	23.0	0.50	C	24.2	0.78
21. E St and Parking Lot Entrance	Intersection does not exist						
22. Arrowhead Ave and Rialto Ave	Signal	B	11.1	0.21	B	12.0	0.36
23. H St and 5th St	Signal	C	22.9	0.57	D	36.9	0.89
24. F St and Rialto Ave	1WSC	A	1.4	N/A	A	1.7	N/A
25. E St and 5th St	Signal	C	21.6	0.56	B	15.8	0.63
26. E St and 4th St	Signal	B	18.4	0.43	B	16.7	0.50
27. E St-Inland Center Dr and Mill St	Signal	C	31.3	0.58	D	44.6	0.84

Notes:

LOS = Level of Service, Delay = Average Vehicle Delay (Seconds), V/C = Volume-to-Capacity Ratio
1WSC – One-Way Stop Control
2WSC - Two-Way Stop Control
AWSC - All-Way Stop Control

5.2 YEAR 2035 WITH PROJECT CONDITIONS

Previously referenced **Figure 16** shows the forecast year 2035 With Project turning movement volumes at each study intersection during the AM and PM peak hours**.** A level of service analysis was conducted to evaluate forecast year With Project intersection operations. Levels of service calculation worksheets are included in **Appendix D**. **Table 9** summarizes the resulting levels of service at these intersections. Results show that all study intersections are projected to operate at satisfactory levels of service except for two intersections.

- J Street and 2nd Street (LOS F in the PM peak hour)
- J Street and Rialto Avenue (LOS F in the AM and PM peak hours)

During 2035 With Project conditions, due to the additional eastbound and westbound through volumes at the J Street/2nd Street and J Street/Rialto Avenue intersections, the southbound and the northbound movements would experience fewer gaps to be able to exit the intersections and hence would experience higher delays. This results in the unsatisfactory levels of service at these intersections.

TABLE 9: YEAR 2035 WITH PROJECT PEAK HOUR LEVELS OF SERVICE

Intersection Name	Control	AM Peak Hour			PM Peak Hour		
		LOS	Delay (Sec.)	V/C	LOS	Delay (Sec.)	V/C
1. K St and 3rd St	2WSC	A	4.0	N/A	A	6.6	N/A
2. K St and 2nd St	AWSC	C	15.4	0.61	D	34.9	0.93
3. K St and Rialto Ave	Signal	C	20.8	0.39	C	20.1	0.50
4. J St and 3rd St	2WSC	A	3.7	N/A	A	3.2	N/A
5. J St and 2nd St	2WSC	B	13.2	N/A	**F**	**261.1**	N/A
6. J St and Rialto Ave	2WSC	**F**	**238.7**	**N/A**	**F**	**OVERFLOW**	**N/A**
7. I St and 3rd St	Intersection does not exist						
8. I St and 2nd St	Signal	A	8.6	0.34	A	7.3	0.39
9. I St and Rialto Ave	1WSC	A	1.3	N/A	A	1.9	N/A
10. I-215 SB Off Ramp and 3rd St	Signal	C	27.1	0.48	C	21.9	0.41
11. I-215 SB On Ramp and 2nd St	Signal	B	17.1	0.43	C	20.3	0.60
12. I-215 NB On Ramp and 3rd S	Signal	C	23.7	0.32	C	27.4	0.61
13. I-215 NB Ramps and 2nd St	Signal	C	21.3	0.58	B	19.4	0.45
14. G St and 3rd St	Signal	B	20.0	0.34	C	21.4	0.31
15. G St and 2nd St	Signal	C	24.6	0.61	C	31.2	0.75
16. G St and Rialto Ave	Signal	A	9.5	0.34	A	9.2	0.38
17. G St and Congress St	2WSC	A	1.3	N/A	A	1.8	N/A
18. Parking Lot Entrance and Congress St	1WSC	A	7.6	N/A	A	7.1	N/A
19. E St and 2nd St	Signal	D	38.9	0.81	D	38.6	0.85
20. E St and Rialto Ave	Signal	C	20.2	0.73	C	29.1	0.82
21. E St and Parking Lot Entrance	1WSC	A	0.8	N/A	A	1.3	N/A
22. Arrowhead Ave and Rialto Ave	Signal	B	11.4	0.21	B	11.9	0.36
23. H St and 5th St	Signal	C	23.0	0.58	D	37.6	0.90
24. F St and Rialto Ave	Signal	B	11.7	0.31	A	9.9	0.49
25. E St and 5th St	Signal	C	21.6	0.58	B	15.9	0.66
26. E St and 4th St	Signal	B	16.6	0.47	B	17.7	0.54
27. E St-Inland Center Dr and Mill St	Signal	C	32.2	0.59	D	45.6	0.90

Notes:

LOS = Level of Service, Delay = Average Vehicle Delay (Seconds), V/C = Volume-to-Capacity Ratio
1WSC - One-Way Stop Control
2WSC - Two-Way Stop Control
AWSC - All-Way Stop Control
BOLD indicates unsatisfactory

5.3 Recommended Mitigation Measures

During 2014 With Project conditions, the intersection of J Street/Rialto Avenue is projected to operate at unsatisfactory levels of service. During 2035 With Project conditions, the J Street/2nd Street and J Street/Rialto Avenue intersections are projected to operate at unsatisfactory levels of service. The following circulation improvements are recommended to improve operations at these locations:

#5. J Street / 2nd Street: Install a traffic signal at the intersection.

#6. J Street / Rialto Avenue: Convert the intersection to an all-way stop controlled intersection.

A level of service analysis using HCM 2000 methodologies was conducted to evaluate 2035 With Project conditions with improvements at the study intersections. The results of the intersection level of service analysis are summarized in **Table 10**. Detailed LOS calculation worksheets are included in **Appendix D**.

Table 10: With Project With Improvements Peak Hour Levels of Service

Intersection Name	Control	AM Peak Hour			PM Peak Hour		
		LOS	Delay (Sec.)	V/C	LOS	Delay (Sec.)	V/C
2014							
6. J Street and Rialto Avenue	AWSC	C	15.6	0.61	C	16.2	0.66
2035							
5. J Street and 2nd Street	Signal	A	6.6	0.60	B	12.4	0.87
6. J Street and Rialto Avenue	AWSC	C	22.7	0.78	D	33.0	0.93

AWSC – All-Way Stop Control

Results show that the intersections would operate at satisfactory levels of service during both AM and PM peak hours with the recommended intersection improvements.

Traffic volumes should be monitored and a traffic signal warrant study per MUTCD guidelines should be conducted prior to any traffic signal installation.

5.4 Closure of South Leg of I Street/Rialto Avenue Intersection

The rerouting of traffic due to the closure of south leg of I Street/Rialto Avenue intersection would have potential traffic impacts on neighborhood streets, mainly J Street and K Street. These streets have very low traffic volumes and the increase in traffic due to the diversions ranges from 25% to 125%. Although it's impossible to predict these patterns unless the project

is in place, the potential traffic impacts could require development and implementation of a neighborhood traffic management plan which would identify measures to reduce speeds on these alternate north-south roadways. These measures may include physical improvements such as:

- speed humps
- chokers or narrowing of street widths
- diverters or semi-diverters, or

Signage improvements such as:

- stop signs
- reduced speed signs, or a combination of both physical and signage improvements.

A certain amount of money from this project should be kept aside to implement these mitigation measures if the need arises. The City Traffic Engineer will need to assess and investigate additional traffic calming options. It is recommended that the City does not implement any traffic calming measures until the project is in place and the new travel patterns have been studied. Premature and unnecessary implementation of traffic calming measures may disrupt the traffic patterns in the vicinity instead of alleviating the neighborhood concerns.

6.0 PARKING LOT INGRESS AND EGRESS

A queuing analysis was conducted at both the entrances to the proposed parking lot to determine queue lengths at Congress Street entrance and E Street entrance. At Congress Street entrance, approximately 100 feet of storage will be provided for vehicles exiting the parking lot. Similarly, at the E Street entrance, approximately 300 feet of storage will be provided for exiting vehicles. These storage lengths were compared to the calculated 95th percentile queues at these intersections to determine if the provided storage will be adequate. Calculated queue lengths and storage ratios for all study scenarios are summarized in **Table 11**. Detailed queuing reports are included in **Appendix D**.

Results show that the expected queues at the entrances to the parking lot will be very low and the provided storage space will be adequate to handle the traffic exiting the parking lot in the future.

TABLE 11: QUEUE LENGTHS

Congress Street Entrance	Approach	Provided Storage (ft)	95th Percentile Queue (ft) AM	95th Percentile Queue (ft) PM
2014 With Project	Southbound	100	0	5
2035 With Project	Southbound	100	0	5
E Street Entrance	**Approach**	**Provided Storage (ft)**	**95th Percentile Queue (ft) AM**	**95th Percentile Queue (ft) PM**
2014 With Project	Eastbound	300	4	25
2035 With Project	Eastbound	300	5	33

At the E Street entrance, the highest number of vehicles on E Street entering the parking lot is 43 from the south and 54 from the north during the AM peak hour. The anticipated queues on both northbound and southbound E Street at the Parking Lot Entrance will be minimal (Please refer to **Appendix D** for queue results). These volumes and anticipated queues are very low and they do not require any deceleration lanes or turn pockets.

7.0 OMNITRANS BUS FACILITY OPERATIONS

As mentioned previously, an Omnitrans Bus Facility is proposed to be constructed as a part of the Project. The Bus Facility would be located at the southwest corner of the Rialto Avenue/E Street intersection and it would include up to 22 on-site bus bays and 12,000 square feet of office building. These bus bays would be used by the buses operated by Omnitrans, MARTA, VVTA, and other carriers. The total number of buses using the Bus Facility and their trip distribution were discussed in the "Development of Traffic Volumes" section.

A few geometric improvements to the streets adjacent to the Bus Facility are also proposed as part of the Project. These improvements include:

- A traffic signal will be installed at F Street/Rialto Avenue intersection and the driveway into the Bus Facility will be the fourth leg of the intersection.
- Exclusive turn lanes will be provided into the Bus Facility from Rialto Avenue and through capacity on Rialto Avenue between F Street and E Street will be reduced to one lane in each direction.
- Angular on-street parking and Kiss-and-Ride slots will be provided on Rialto Avenue between F Street and E Street.
- A right-turn pocket will be provided along E Street for southbound buses to enter the Bus Facility without turning into Rialto Avenue.

8.0 SUMMARY AND CONCLUSIONS

The proposed Project will extend Metrolink service from its existing terminus at the Santa Fe Depot in San Bernardino to a proposed new rail station to be located at Rialto Avenue and E Street intersection in downtown San Bernardino. No Project and With Project conditions were evaluated under year 2014 and year 2035 conditions. The following summarizes the conclusion of the analysis:

- Under existing conditions, all study intersections currently operate at acceptable levels of service.
- Under year 2014 No Project conditions, all study intersections are projected to operate at acceptable levels of service.
- Under opening year 2014 With Project conditions, all study intersections are projected to operate at acceptable levels of service except for J Street/Rialto Avenue.
- Under year 2035 No Project conditions, all study intersections are projected to operate at acceptable levels of service.
- Under year 2035 With Project conditions, all study intersections are projected to operate at acceptable levels of service except for J Street/2nd Street, and J Street/Rialto Avenue intersections.
- A traffic signal is recommended at the intersection of J Street/2nd Street. MUTCD traffic signal warrant guidelines to be followed.
- Converting the intersection of J Street/Rialto Avenue from a two-way stop control to an all-way stop control is recommended.
- Under year 2014 With Project conditions with the recommended intersection improvement, all study intersections are projected to operate at acceptable levels of service.
- Under year 2035 With Project conditions with recommended intersection improvements, all study intersections are projected to operate at acceptable levels of service.
- The intersections of Parking Lot Entrance/Congress Street and E Street/Parking Lot Entrance are expected to operate at satisfactory levels of service with the proposed one-way stop controls.
- The expected queues at the Congress Street and E Street entrances to the parking lot are projected to be lower than the available storage space.
- The proposed improvements at the study intersections will be adequate to handle bus operations safely and efficiently.

Submitted by:

ITERIS

APPENDICES

DOWNTOWN SAN BERNARDINO PASSENGER RAIL PROJECT (WITH 3RD STREET CLOSURE)

Draft Traffic Impact Analysis

Submitted to:

San Bernardino Associated Governments

April 10, 2012

APPENDIX A: TRAFFIC COUNT SHEETS

Counts Unlimited Inc.
25286 Jaclyn Avenue
Moreno Valley, CA 92557
(951) 485-7934

City of San Bernardino
N/S: "K" Street
E/W: 3rd Street
Weather: Sunny

File Name : SBCK3AM
Site Code : 10089099
Start Date : 4/21/2010
Page No : 1

Groups Printed- Total Volume

	Private Drive Southbound				3rd Street Westbound				"K" Street Northbound				3rd Street Eastbound				
Start Time	Left	Thru	Right	App. Total	Left	Thru	Right	App. Total	Left	Thru	Right	App. Total	Left	Thru	Right	App. Total	Int. Total
07:00 AM	4	0	0	4	8	24	1	33	3	0	2	5	0	7	0	7	49
07:15 AM	0	0	0	0	7	15	0	22	3	0	5	8	0	17	1	18	48
07:30 AM	0	0	0	0	3	14	0	17	1	3	1	5	1	14	0	15	37
07:45 AM	0	0	0	0	11	13	0	24	0	5	5	10	0	9	0	9	43
Total	4	0	0	4	29	66	1	96	7	8	13	28	1	47	1	49	177
08:00 AM	0	0	0	0	5	19	0	24	2	4	3	9	0	10	2	12	45
08:15 AM	0	0	0	0	4	10	1	15	1	4	2	7	0	2	2	4	26
08:30 AM	0	0	0	0	3	14	0	17	1	1	2	4	0	7	2	9	30
08:45 AM	0	0	0	0	7	14	5	26	0	1	1	2	0	8	1	9	37
Total	0	0	0	0	19	57	6	82	4	10	8	22	0	27	7	34	138
Grand Total	4	0	0	4	48	123	7	178	11	18	21	50	1	74	8	83	315
Apprch %	100	0	0		27	69.1	3.9		22	36	42		1.2	89.2	9.6		
Total %	1.3	0	0	1.3	15.2	39	2.2	56.5	3.5	5.7	6.7	15.9	0.3	23.5	2.5	26.3	

	Private Drive Southbound				3rd Street Westbound				"K" Street Northbound				3rd Street Eastbound				
Start Time	Left	Thru	Right	App. Total	Left	Thru	Right	App. Total	Left	Thru	Right	App. Total	Left	Thru	Right	App. Total	Int. Total
Peak Hour Analysis From 07:00 AM to 08:45 AM - Peak 1 of 1																	
Peak Hour for Entire Intersection Begins at 07:00 AM																	
07:00 AM	**4**	0	0	**4**	8	**24**	**1**	**33**	**3**	0	2	5	0	7	0	7	**49**
07:15 AM	0	0	0	0	7	15	0	22	3	0	**5**	8	0	**17**	**1**	**18**	48
07:30 AM	0	0	0	0	3	14	0	17	1	3	1	5	**1**	14	0	15	37
07:45 AM	0	0	0	0	**11**	13	0	24	0	**5**	5	**10**	0	9	0	9	43
Total Volume	4	0	0	4	29	66	1	96	7	8	13	28	1	47	1	49	177
% App. Total	100	0	0		30.2	68.8	1		25	28.6	46.4		2	95.9	2		
PHF	.250	.000	.000	.250	.659	.688	.250	.727	.583	.400	.650	.700	.250	.691	.250	.681	.903

Counts Unlimited Inc.
25286 Jaclyn Avenue
Moreno Valley, CA 92557
(951) 485-7934

City of San Bernardino
N/S: "K" Street
E/W: 3rd Street
Weather: Sunny

File Name : SBCK3AM
Site Code : 10089099
Start Date : 4/21/2010
Page No : 2

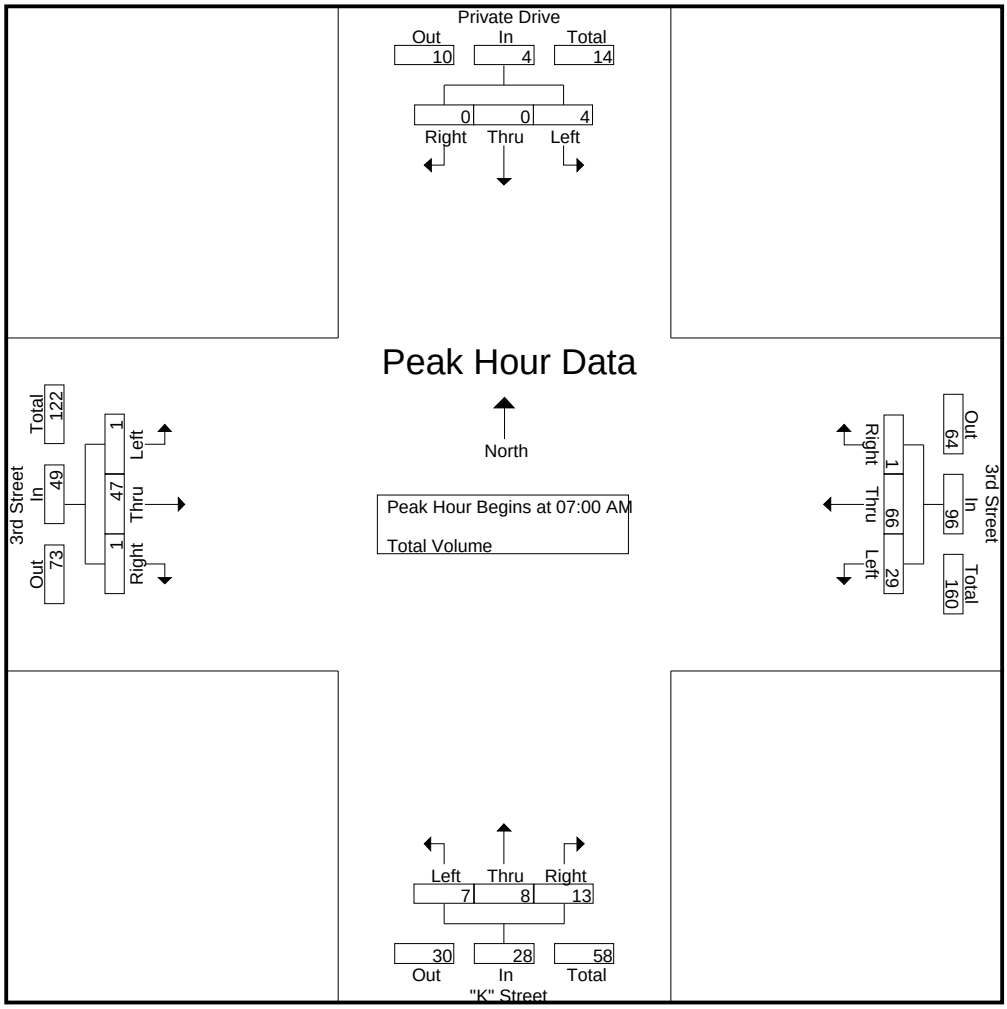

Peak Hour Analysis From 07:00 AM to 08:45 AM - Peak 1 of 1

Peak Hour for Each Approach Begins at:

	07:00 AM				07:00 AM				07:15 AM				07:15 AM			
+0 mins.	**4**	0	0	**4**	8	**24**	**1**	**33**	**3**	0	**5**	8	0	**17**	1	**18**
+15 mins.	0	0	0	0	7	15	0	22	1	3	1	5	**1**	14	0	15
+30 mins.	0	0	0	0	3	14	0	17	0	**5**	5	**10**	0	9	0	9
+45 mins.	0	0	0	0	**11**	13	0	24	2	4	3	9	0	10	**2**	12
Total Volume	4	0	0	4	29	66	1	96	6	12	14	32	1	50	3	54
% App. Total	100	0	0		30.2	68.8	1		18.8	37.5	43.8		1.9	92.6	5.6	
PHF	.250	.000	.000	.250	.659	.688	.250	.727	.500	.600	.700	.800	.250	.735	.375	.750

Counts Unlimited Inc.
25286 Jaclyn Avenue
Moreno Valley, CA 92557
(951) 485-7934

City of San Bernardino
N/S: "K" Street
E/W: 3rd Street
Weather: Sunny

File Name : SBCK3PM
Site Code : 10089099
Start Date : 4/21/2010
Page No : 1

Groups Printed- Total Volume

	Private Drive Southbound				3rd Street Westbound				"K" Street Northbound				3rd Street Eastbound				
Start Time	Left	Thru	Right	App. Total	Left	Thru	Right	App. Total	Left	Thru	Right	App. Total	Left	Thru	Right	App. Total	Int. Total
04:00 PM	0	0	0	0	9	23	1	33	0	0	5	5	0	7	0	7	45
04:15 PM	0	0	0	0	10	21	0	31	1	0	2	3	0	10	0	10	44
04:30 PM	0	0	0	0	6	25	1	32	1	1	3	5	0	6	2	8	45
04:45 PM	0	0	0	0	9	28	1	38	1	0	0	1	1	27	20	48	87
Total	0	0	0	0	34	97	3	134	3	1	10	14	1	50	22	73	221
05:00 PM	0	1	0	1	12	36	0	48	1	0	4	5	0	10	10	20	74
05:15 PM	0	0	0	0	9	27	0	36	0	1	4	5	0	23	21	44	85
05:30 PM	0	0	0	0	10	28	0	38	3	1	3	7	1	24	13	38	83
05:45 PM	0	0	0	0	11	25	0	36	1	0	2	3	0	25	19	44	83
Total	0	1	0	1	42	116	0	158	5	2	13	20	1	82	63	146	325
Grand Total	0	1	0	1	76	213	3	292	8	3	23	34	2	132	85	219	546
Apprch %	0	100	0		26	72.9	1		23.5	8.8	67.6		0.9	60.3	38.8		
Total %	0	0.2	0	0.2	13.9	39	0.5	53.5	1.5	0.5	4.2	6.2	0.4	24.2	15.6	40.1	

	Private Drive Southbound				3rd Street Westbound				"K" Street Northbound				3rd Street Eastbound				
Start Time	Left	Thru	Right	App. Total	Left	Thru	Right	App. Total	Left	Thru	Right	App. Total	Left	Thru	Right	App. Total	Int. Total
Peak Hour Analysis From 04:00 PM to 05:45 PM - Peak 1 of 1																	
Peak Hour for Entire Intersection Begins at 04:45 PM																	
04:45 PM	0	0	0	0	9	28	**1**	38	1	0	0	1	**1**	**27**	20	**48**	**87**
05:00 PM	0	**1**	0	**1**	**12**	**36**	0	**48**	1	0	**4**	5	0	10	10	20	74
05:15 PM	0	0	0	0	9	27	0	36	0	**1**	4	5	0	23	**21**	44	85
05:30 PM	0	0	0	0	10	28	0	38	**3**	1	3	**7**	1	24	13	38	83
Total Volume	0	1	0	1	40	119	1	160	5	2	11	18	2	84	64	150	329
% App. Total	0	100	0		25	74.4	0.6		27.8	11.1	61.1		1.3	56	42.7		
PHF	.000	.250	.000	.250	.833	.826	.250	.833	.417	.500	.688	.643	.500	.778	.762	.781	.945

Counts Unlimited Inc.
25286 Jaclyn Avenue
Moreno Valley, CA 92557
(951) 485-7934

City of San Bernardino
N/S: "K" Street
E/W: 3rd Street
Weather: Sunny

File Name : SBCK3PM
Site Code : 10089099
Start Date : 4/21/2010
Page No : 2

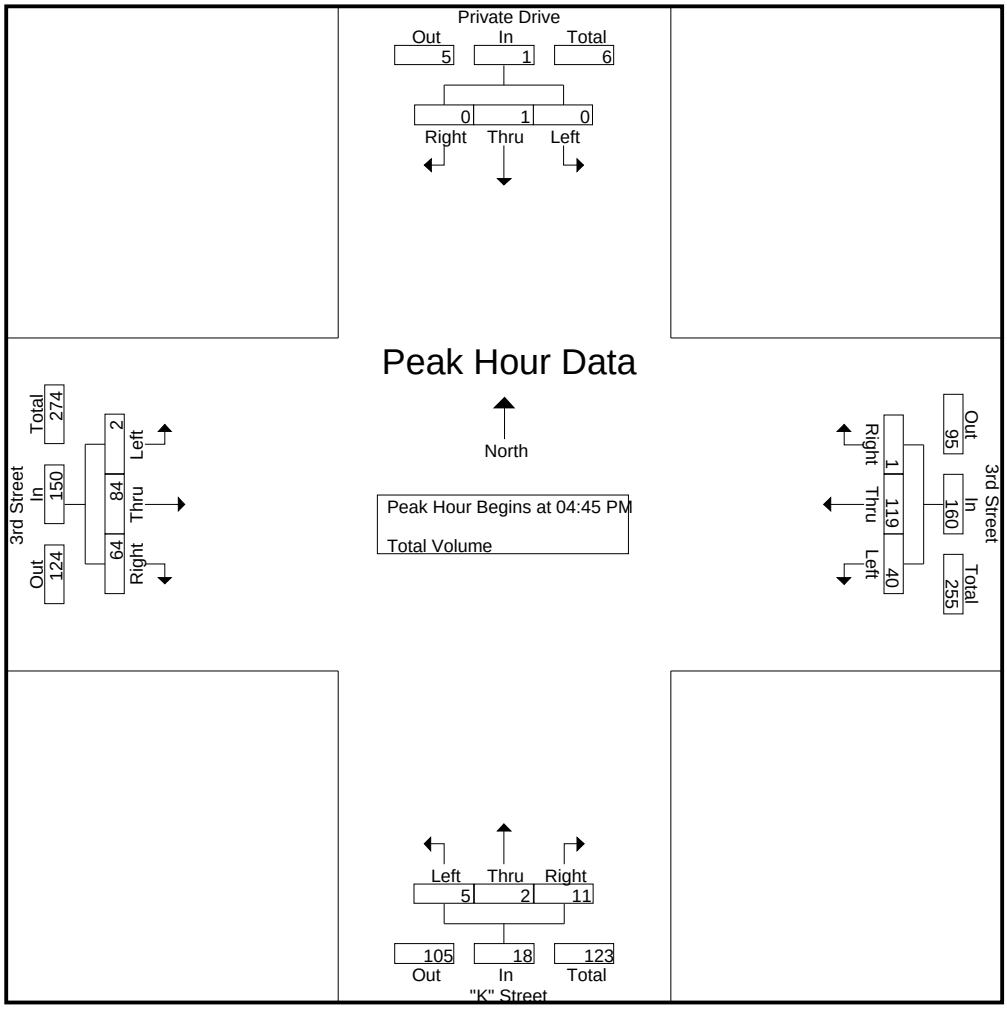

Peak Hour Analysis From 04:00 PM to 05:45 PM - Peak 1 of 1

Peak Hour for Each Approach Begins at:

	04:15 PM				04:45 PM				05:00 PM				04:45 PM			
+0 mins.	0	0	0	0	9	28	**1**	38	1	0	**4**	5	**1**	**27**	20	**48**
+15 mins.	0	0	0	0	**12**	**36**	0	**48**	0	**1**	4	5	0	10	10	20
+30 mins.	0	0	0	0	9	27	0	36	**3**	1	3	**7**	0	23	**21**	44
+45 mins.	0	**1**	0	**1**	10	28	0	38	1	0	2	3	1	24	13	38
Total Volume	0	1	0	1	40	119	1	160	5	2	13	20	2	84	64	150
% App. Total	0	100	0		25	74.4	0.6		25	10	65		1.3	56	42.7	
PHF	.000	.250	.000	.250	.833	.826	.250	.833	.417	.500	.813	.714	.500	.778	.762	.781

Counts Unlimited Inc.
25286 Jaclyn Avenue
Moreno Valley, CA 92557
(951) 485-7934

City of San Bernardino
N/S: "K" Street
E/W: 2nd Street
Weather: Sunny

File Name : SBCK2AM
Site Code : 9268991
Start Date : 10/21/2009
Page No : 1

Groups Printed- Total Volume

	"K" Street Southbound				2nd Street Westbound				"K" Street Northbound				2nd Street Eastbound				
Start Time	Left	Thru	Right	App. Total	Left	Thru	Right	App. Total	Left	Thru	Right	App. Total	Left	Thru	Right	App. Total	Int. Total
07:00 AM	0	3	5	8	4	30	4	38	2	0	8	10	2	39	5	46	102
07:15 AM	2	9	0	11	11	29	3	43	6	0	10	16	1	58	1	60	130
07:30 AM	1	5	4	10	9	29	7	45	3	0	9	12	2	55	5	62	129
07:45 AM	1	2	2	5	6	33	5	44	5	1	11	17	4	70	2	76	142
Total	4	19	11	34	30	121	19	170	16	1	38	55	9	222	13	244	503
08:00 AM	3	7	5	15	10	28	5	43	1	2	8	11	0	57	4	61	130
08:15 AM	2	1	2	5	2	32	1	35	6	2	6	14	1	40	1	42	96
08:30 AM	0	1	1	2	6	26	2	34	10	2	7	19	0	32	7	39	94
08:45 AM	1	4	2	7	3	42	0	45	6	1	3	10	2	37	1	40	102
Total	6	13	10	29	21	128	8	157	23	7	24	54	3	166	13	182	422
Grand Total	10	32	21	63	51	249	27	327	39	8	62	109	12	388	26	426	925
Apprch %	15.9	50.8	33.3		15.6	76.1	8.3		35.8	7.3	56.9		2.8	91.1	6.1		
Total %	1.1	3.5	2.3	6.8	5.5	26.9	2.9	35.4	4.2	0.9	6.7	11.8	1.3	41.9	2.8	46.1	

	"K" Street Southbound				2nd Street Westbound				"K" Street Northbound				2nd Street Eastbound				
Start Time	Left	Thru	Right	App. Total	Left	Thru	Right	App. Total	Left	Thru	Right	App. Total	Left	Thru	Right	App. Total	Int. Total
Peak Hour Analysis From 07:00 AM to 08:45 AM - Peak 1 of 1																	
Peak Hour for Entire Intersection Begins at 07:15 AM																	
07:15 AM	2	**9**	0	11	**11**	29	3	43	**6**	0	10	16	1	58	1	60	130
07:30 AM	1	5	4	10	9	29	**7**	**45**	3	0	9	12	2	55	**5**	62	129
07:45 AM	1	2	2	5	6	**33**	5	44	5	1	**11**	**17**	**4**	**70**	2	**76**	**142**
08:00 AM	**3**	7	**5**	**15**	10	28	5	43	1	**2**	8	11	0	57	4	61	130
Total Volume	7	23	11	41	36	119	20	175	15	3	38	56	7	240	12	259	531
% App. Total	17.1	56.1	26.8		20.6	68	11.4		26.8	5.4	67.9		2.7	92.7	4.6		
PHF	.583	.639	.550	.683	.818	.902	.714	.972	.625	.375	.864	.824	.438	.857	.600	.852	.935

Counts Unlimited Inc.
25286 Jaclyn Avenue
Moreno Valley, CA 92557
(951) 485-7934

City of San Bernardino
N/S: "K" Street
E/W: 2nd Street
Weather: Sunny

File Name : SBCK2AM
Site Code : 9268991
Start Date : 10/21/2009
Page No : 2

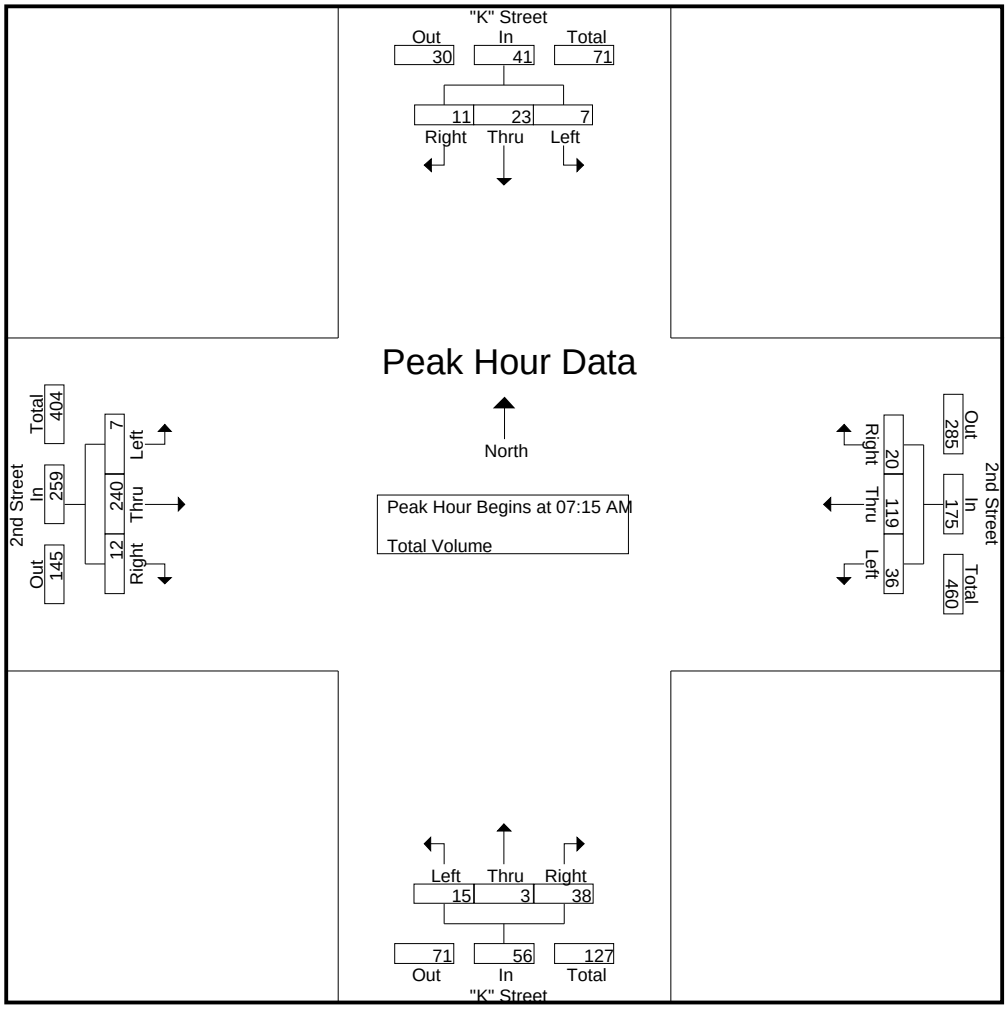

Peak Hour Analysis From 07:00 AM to 08:45 AM - Peak 1 of 1

Peak Hour for Each Approach Begins at:

	07:15 AM				07:15 AM				07:45 AM				07:15 AM			
+0 mins.	2	**9**	0	11	**11**	29	3	43	5	1	**11**	17	1	58	1	60
+15 mins.	1	5	4	10	9	29	**7**	**45**	1	**2**	8	11	2	55	**5**	62
+30 mins.	1	2	2	5	6	**33**	5	44	6	2	6	14	**4**	**70**	2	**76**
+45 mins.	**3**	7	**5**	**15**	10	28	5	43	**10**	2	7	**19**	0	57	4	61
Total Volume	7	23	11	41	36	119	20	175	22	7	32	61	7	240	12	259
% App. Total	17.1	56.1	26.8		20.6	68	11.4		36.1	11.5	52.5		2.7	92.7	4.6	
PHF	.583	.639	.550	.683	.818	.902	.714	.972	.550	.875	.727	.803	.438	.857	.600	.852

Counts Unlimited Inc.
25286 Jaclyn Avenue
Moreno Valley, CA 92557
(951) 485-7934

City of San Bernardino
N/S: "K" Street
E/W: 2nd Street
Weather: Sunny

File Name : SBCK2PM
Site Code : 9268098
Start Date : 10/21/2009
Page No : 1

Groups Printed- Total Volume

	"K" Street Southbound				2nd Street Westbound				"K" Street Northbound				2nd Street Eastbound				
Start Time	Left	Thru	Right	App. Total	Left	Thru	Right	App. Total	Left	Thru	Right	App. Total	Left	Thru	Right	App. Total	Int. Total
04:00 PM	3	4	9	16	7	56	0	63	8	1	13	22	0	57	5	62	163
04:15 PM	1	4	5	10	4	60	1	65	6	1	9	16	1	50	3	54	145
04:30 PM	3	2	7	12	4	59	3	66	7	1	9	17	3	67	2	72	167
04:45 PM	10	3	4	17	6	61	2	69	10	0	8	18	3	57	3	63	167
Total	17	13	25	55	21	236	6	263	31	3	39	73	7	231	13	251	642
05:00 PM	5	6	3	14	3	59	1	63	8	1	1	10	0	74	10	84	171
05:15 PM	4	4	7	15	6	82	3	91	7	1	4	12	3	51	2	56	174
05:30 PM	6	8	5	19	8	66	0	74	9	0	7	16	2	63	3	68	177
05:45 PM	8	4	6	18	8	64	3	75	11	3	4	18	2	75	8	85	196
Total	23	22	21	66	25	271	7	303	35	5	16	56	7	263	23	293	718
Grand Total	40	35	46	121	46	507	13	566	66	8	55	129	14	494	36	544	1360
Apprch %	33.1	28.9	38		8.1	89.6	2.3		51.2	6.2	42.6		2.6	90.8	6.6		
Total %	2.9	2.6	3.4	8.9	3.4	37.3	1	41.6	4.9	0.6	4	9.5	1	36.3	2.6	40	

	"K" Street Southbound				2nd Street Westbound				"K" Street Northbound				2nd Street Eastbound				
Start Time	Left	Thru	Right	App. Total	Left	Thru	Right	App. Total	Left	Thru	Right	App. Total	Left	Thru	Right	App. Total	Int. Total
Peak Hour Analysis From 04:00 PM to 05:45 PM - Peak 1 of 1																	
Peak Hour for Entire Intersection Begins at 05:00 PM																	
05:00 PM	5	6	3	14	3	59	1	63	8	1	1	10	0	74	**10**	84	171
05:15 PM	4	4	**7**	15	6	**82**	**3**	**91**	7	1	4	12	**3**	51	2	56	174
05:30 PM	6	**8**	5	**19**	**8**	66	0	74	9	0	**7**	16	2	63	3	68	177
05:45 PM	**8**	4	6	18	8	64	3	75	**11**	**3**	4	**18**	2	**75**	8	**85**	**196**
Total Volume	23	22	21	66	25	271	7	303	35	5	16	56	7	263	23	293	718
% App. Total	34.8	33.3	31.8		8.3	89.4	2.3		62.5	8.9	28.6		2.4	89.8	7.8		
PHF	.719	.688	.750	.868	.781	.826	.583	.832	.795	.417	.571	.778	.583	.877	.575	.862	.916

Counts Unlimited Inc.
25286 Jaclyn Avenue
Moreno Valley, CA 92557
(951) 485-7934

City of San Bernardino
N/S: "K" Street
E/W: 2nd Street
Weather: Sunny

File Name : SBCK2PM
Site Code : 9268098
Start Date : 10/21/2009
Page No : 2

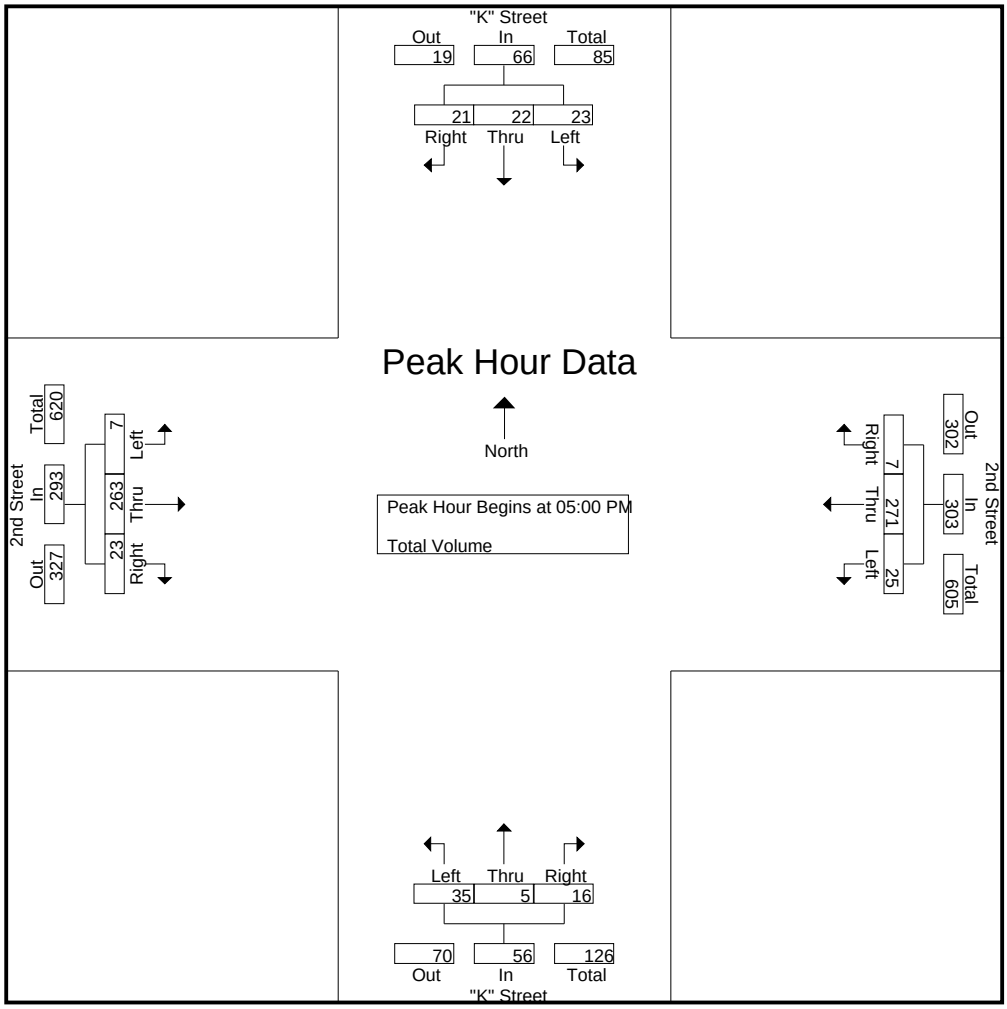

Peak Hour Analysis From 04:00 PM to 05:45 PM - Peak 1 of 1

Peak Hour for Each Approach Begins at:

	05:00 PM				05:00 PM				04:00 PM				05:00 PM			
+0 mins.	5	6	3	14	3	59	1	63	8	**1**	**13**	**22**	0	74	**10**	84
+15 mins.	4	4	**7**	15	6	**82**	**3**	**91**	6	1	9	16	**3**	51	2	56
+30 mins.	6	**8**	5	**19**	**8**	66	0	74	7	1	9	17	2	63	3	68
+45 mins.	**8**	4	6	18	8	64	3	75	**10**	0	8	18	2	**75**	8	**85**
Total Volume	23	22	21	66	25	271	7	303	31	3	39	73	7	263	23	293
% App. Total	34.8	33.3	31.8		8.3	89.4	2.3		42.5	4.1	53.4		2.4	89.8	7.8	
PHF	.719	.688	.750	.868	.781	.826	.583	.832	.775	.750	.750	.830	.583	.877	.575	.862

Counts Unlimited Inc.
25286 Jaclyn Avenue
Moreno Valley, CA 92557
(951) 485-7934

City of San Bernardino
N/S: "K" Street
E/W: Rialto Avenue
Weather: Sunny

File Name : SBCKRIAM
Site Code : 9268099
Start Date : 10/21/2009
Page No : 1

Groups Printed- Total Volume

	"K" Street Southbound				Rialto Avenue Westbound				"K" Street Northbound				Rialto Avenue Eastbound				
Start Time	Left	Thru	Right	App. Total	Left	Thru	Right	App. Total	Left	Thru	Right	App. Total	Left	Thru	Right	App. Total	Int. Total
07:00 AM	1	4	1	6	13	29	1	43	6	2	18	26	4	79	7	90	165
07:15 AM	0	10	8	18	22	36	0	58	10	6	34	50	3	89	8	100	226
07:30 AM	1	8	8	17	22	53	0	75	8	5	35	48	2	111	7	120	260
07:45 AM	1	8	4	13	40	49	0	89	11	4	28	43	4	123	11	138	283
Total	3	30	21	54	97	167	1	265	35	17	115	167	13	402	33	448	934
08:00 AM	1	3	2	6	27	45	1	73	6	5	22	33	2	84	8	94	206
08:15 AM	0	4	1	5	10	29	4	43	3	4	10	17	2	64	3	69	134
08:30 AM	1	5	1	7	19	42	1	62	9	8	13	30	3	71	16	90	189
08:45 AM	2	5	2	9	22	46	2	70	12	5	25	42	1	65	14	80	201
Total	4	17	6	27	78	162	8	248	30	22	70	122	8	284	41	333	730
Grand Total	7	47	27	81	175	329	9	513	65	39	185	289	21	686	74	781	1664
Apprch %	8.6	58	33.3		34.1	64.1	1.8		22.5	13.5	64		2.7	87.8	9.5		
Total %	0.4	2.8	1.6	4.9	10.5	19.8	0.5	30.8	3.9	2.3	11.1	17.4	1.3	41.2	4.4	46.9	

	"K" Street Southbound				Rialto Avenue Westbound				"K" Street Northbound				Rialto Avenue Eastbound				
Start Time	Left	Thru	Right	App. Total	Left	Thru	Right	App. Total	Left	Thru	Right	App. Total	Left	Thru	Right	App. Total	Int. Total
Peak Hour Analysis From 07:00 AM to 08:45 AM - Peak 1 of 1																	
Peak Hour for Entire Intersection Begins at 07:15 AM																	
07:15 AM	0	**10**	**8**	**18**	22	36	0	58	10	**6**	34	**50**	3	89	8	100	226
07:30 AM	**1**	8	8	17	22	**53**	0	75	8	5	**35**	48	2	111	7	120	260
07:45 AM	1	8	4	13	**40**	49	0	**89**	**11**	4	28	43	**4**	**123**	**11**	**138**	**283**
08:00 AM	1	3	2	6	27	45	**1**	73	6	5	22	33	2	84	8	94	206
Total Volume	3	29	22	54	111	183	1	295	35	20	119	174	11	407	34	452	975
% App. Total	5.6	53.7	40.7		37.6	62	0.3		20.1	11.5	68.4		2.4	90	7.5		
PHF	.750	.725	.688	.750	.694	.863	.250	.829	.795	.833	.850	.870	.688	.827	.773	.819	.861

Counts Unlimited Inc.
25286 Jaclyn Avenue
Moreno Valley, CA 92557
(951) 485-7934

City of San Bernardino
N/S: "K" Street
E/W: Rialto Avenue
Weather: Sunny

File Name : SBCKRIAM
Site Code : 9268099
Start Date : 10/21/2009
Page No : 2

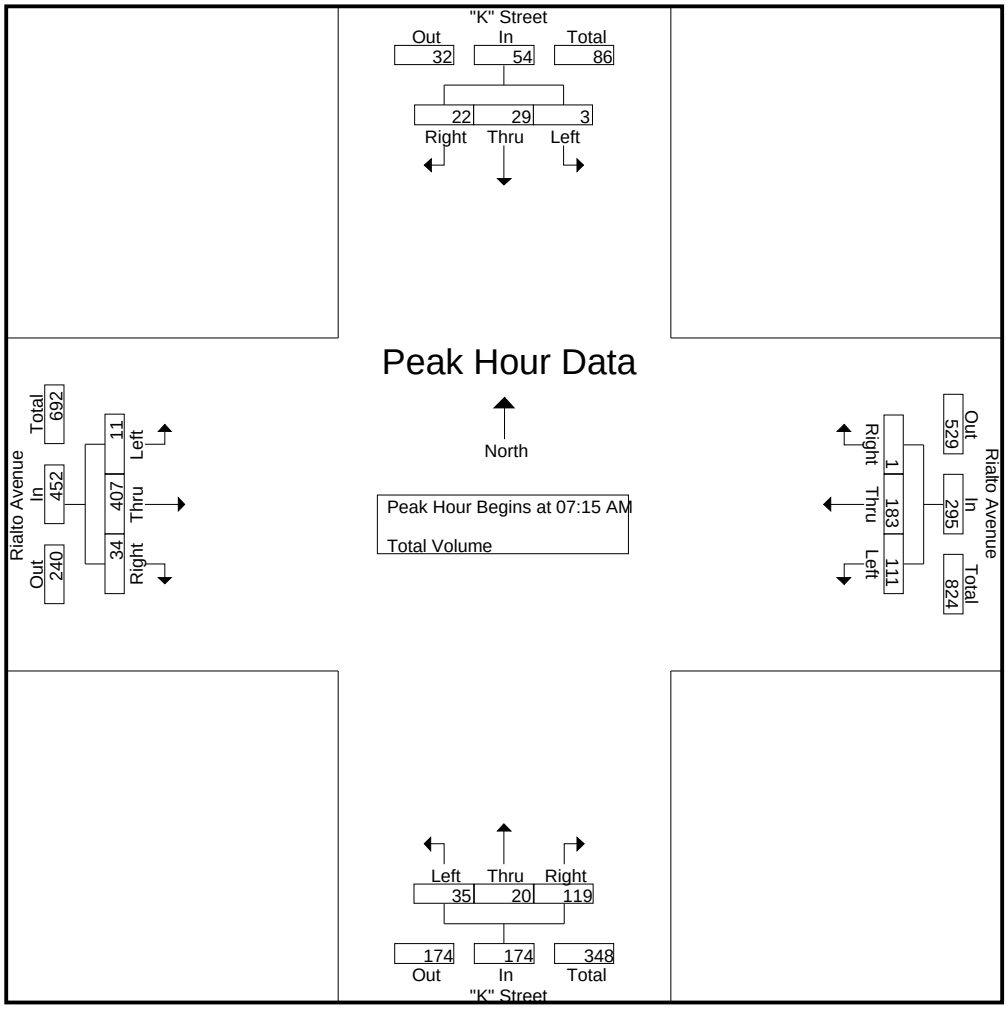

Peak Hour Analysis From 07:00 AM to 08:45 AM - Peak 1 of 1

Peak Hour for Each Approach Begins at:

	07:00 AM				07:15 AM				07:15 AM				07:15 AM			
+0 mins.	**1**	4	1	6	22	36	0	58	10	**6**	34	**50**	3	89	8	100
+15 mins.	0	**10**	**8**	**18**	22	**53**	0	75	8	5	**35**	48	2	111	7	120
+30 mins.	1	8	8	17	**40**	49	0	**89**	**11**	4	28	43	**4**	**123**	**11**	**138**
+45 mins.	1	8	4	13	27	45	**1**	73	6	5	22	33	2	84	8	94
Total Volume	3	30	21	54	111	183	1	295	35	20	119	174	11	407	34	452
% App. Total	5.6	55.6	38.9		37.6	62	0.3		20.1	11.5	68.4		2.4	90	7.5	
PHF	.750	.750	.656	.750	.694	.863	.250	.829	.795	.833	.850	.870	.688	.827	.773	.819

Counts Unlimited Inc.
25286 Jaclyn Avenue
Moreno Valley, CA 92557
(951) 485-7934

City of San Bernardino
N/S: "K" Street
E/W: Rialto Avenue
Weather: Sunny

File Name : SBCKRIPM
Site Code : 9268099
Start Date : 10/21/2009
Page No : 1

Groups Printed- Total Volume

	"K" Street Southbound				Rialto Avenue Westbound				"K" Street Northbound				Rialto Avenue Eastbound				
Start Time	Left	Thru	Right	App. Total	Left	Thru	Right	App. Total	Left	Thru	Right	App. Total	Left	Thru	Right	App. Total	Int. Total
04:00 PM	2	4	6	12	24	97	2	123	15	10	41	66	2	80	7	89	290
04:15 PM	1	6	2	9	20	80	4	104	7	9	36	52	5	78	8	91	256
04:30 PM	0	6	1	7	26	120	2	148	5	6	21	32	5	83	9	97	284
04:45 PM	2	7	3	12	24	111	4	139	5	9	27	41	3	52	6	61	253
Total	5	23	12	40	94	408	12	514	32	34	125	191	15	293	30	338	1083
05:00 PM	1	14	3	18	23	156	0	179	8	6	29	43	1	93	11	105	345
05:15 PM	2	6	4	12	21	127	2	150	9	7	37	53	1	80	9	90	305
05:30 PM	2	7	8	17	28	106	4	138	9	12	30	51	1	84	5	90	296
05:45 PM	0	14	7	21	34	120	7	161	5	8	32	45	3	87	9	99	326
Total	5	41	22	68	106	509	13	628	31	33	128	192	6	344	34	384	1272
Grand Total	10	64	34	108	200	917	25	1142	63	67	253	383	21	637	64	722	2355
Apprch %	9.3	59.3	31.5		17.5	80.3	2.2		16.4	17.5	66.1		2.9	88.2	8.9		
Total %	0.4	2.7	1.4	4.6	8.5	38.9	1.1	48.5	2.7	2.8	10.7	16.3	0.9	27	2.7	30.7	

	"K" Street Southbound				Rialto Avenue Westbound				"K" Street Northbound				Rialto Avenue Eastbound				
Start Time	Left	Thru	Right	App. Total	Left	Thru	Right	App. Total	Left	Thru	Right	App. Total	Left	Thru	Right	App. Total	Int. Total
Peak Hour Analysis From 04:00 PM to 05:45 PM - Peak 1 of 1																	
Peak Hour for Entire Intersection Begins at 05:00 PM																	
05:00 PM	1	**14**	3	18	23	**156**	0	**179**	8	6	29	43	1	**93**	**11**	**105**	**345**
05:15 PM	**2**	6	4	12	21	127	2	150	**9**	7	**37**	**53**	1	80	9	90	305
05:30 PM	2	7	**8**	17	28	106	4	138	9	**12**	30	51	1	84	5	90	296
05:45 PM	0	14	7	**21**	**34**	120	**7**	161	5	8	32	45	**3**	87	9	99	326
Total Volume	5	41	22	68	106	509	13	628	31	33	128	192	6	344	34	384	1272
% App. Total	7.4	60.3	32.4		16.9	81.1	2.1		16.1	17.2	66.7		1.6	89.6	8.9		
PHF	.625	.732	.688	.810	.779	.816	.464	.877	.861	.688	.865	.906	.500	.925	.773	.914	.922

Counts Unlimited Inc.
25286 Jaclyn Avenue
Moreno Valley, CA 92557
(951) 485-7934

City of San Bernardino
N/S: "K" Street
E/W: Rialto Avenue
Weather: Sunny

File Name : SBCKRIPM
Site Code : 9268099
Start Date : 10/21/2009
Page No : 2

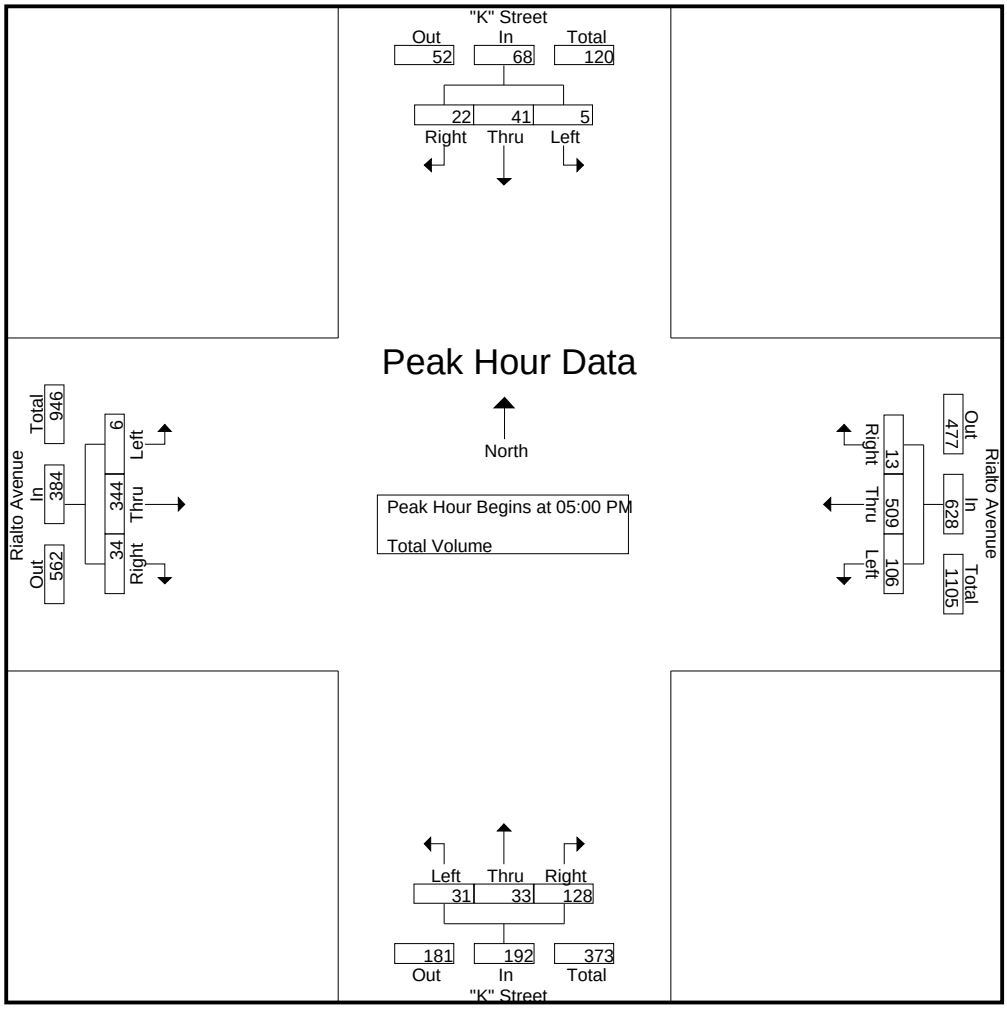

Peak Hour Analysis From 04:00 PM to 05:45 PM - Peak 1 of 1

Peak Hour for Each Approach Begins at:

	05:00 PM				05:00 PM				05:00 PM				05:00 PM			
+0 mins.	1	**14**	3	18	23	**156**	0	**179**	8	6	29	43	1	**93**	**11**	**105**
+15 mins.	**2**	6	4	12	21	127	2	150	**9**	7	**37**	**53**	1	80	9	90
+30 mins.	2	7	**8**	17	28	106	4	138	9	**12**	30	51	1	84	5	90
+45 mins.	0	14	7	**21**	**34**	120	**7**	161	5	8	32	45	**3**	87	9	99
Total Volume	5	41	22	68	106	509	13	628	31	33	128	192	6	344	34	384
% App. Total	7.4	60.3	32.4		16.9	81.1	2.1		16.1	17.2	66.7		1.6	89.6	8.9	
PHF	.625	.732	.688	.810	.779	.816	.464	.877	.861	.688	.865	.906	.500	.925	.773	.914

Counts Unlimited Inc.
25286 Jaclyn Avenue
Moreno Valley, CA 92557
(951) 485-7934

City of San Bernardino
N/S: "J" Street
E/W: 3rd Street
Weather: Sunny

File Name : SBCJ3AM
Site Code : 10089159
Start Date : 4/21/2010
Page No : 1

Groups Printed- Total Volume

	3rd Street Westbound			"J" Street Northbound			3rd Street Eastbound			
Start Time	Left	Thru	App. Total	Left	Right	App. Total	Thru	Right	App. Total	Int. Total
07:00 AM	2	35	37	1	0	1	9	0	9	47
07:15 AM	0	24	24	0	0	0	21	0	21	45
07:30 AM	1	21	22	0	2	2	12	0	12	36
07:45 AM	1	28	29	4	0	4	19	0	19	52
Total	4	108	112	5	2	7	61	0	61	180
08:00 AM	2	31	33	0	3	3	12	0	12	48
08:15 AM	1	17	18	1	2	3	6	0	6	27
08:30 AM	3	22	25	0	1	1	8	2	10	36
08:45 AM	3	25	28	1	3	4	13	2	15	47
Total	9	95	104	2	9	11	39	4	43	158
Grand Total	13	203	216	7	11	18	100	4	104	338
Apprch %	6	94		38.9	61.1		96.2	3.8		
Total %	3.8	60.1	63.9	2.1	3.3	5.3	29.6	1.2	30.8	

	3rd Street Westbound			"J" Street Northbound			3rd Street Eastbound			
Start Time	Left	Thru	App. Total	Left	Right	App. Total	Thru	Right	App. Total	Int. Total
Peak Hour Analysis From 07:00 AM to 08:45 AM - Peak 1 of 1										
Peak Hour for Entire Intersection Begins at 07:15 AM										
07:15 AM	0	24	24	0	0	0	**21**	0	**21**	45
07:30 AM	1	21	22	0	2	2	12	0	12	36
07:45 AM	1	28	29	**4**	0	**4**	19	0	19	**52**
08:00 AM	**2**	**31**	**33**	0	**3**	3	12	0	12	48
Total Volume	4	104	108	4	5	9	64	0	64	181
% App. Total	3.7	96.3		44.4	55.6		100	0		
PHF	.500	.839	.818	.250	.417	.563	.762	.000	.762	.870

Counts Unlimited Inc.
25286 Jaclyn Avenue
Moreno Valley, CA 92557
(951) 485-7934

City of San Bernardino
N/S: "J" Street
E/W: 3rd Street
Weather: Sunny

File Name : SBCJ3AM
Site Code : 10089159
Start Date : 4/21/2010
Page No : 2

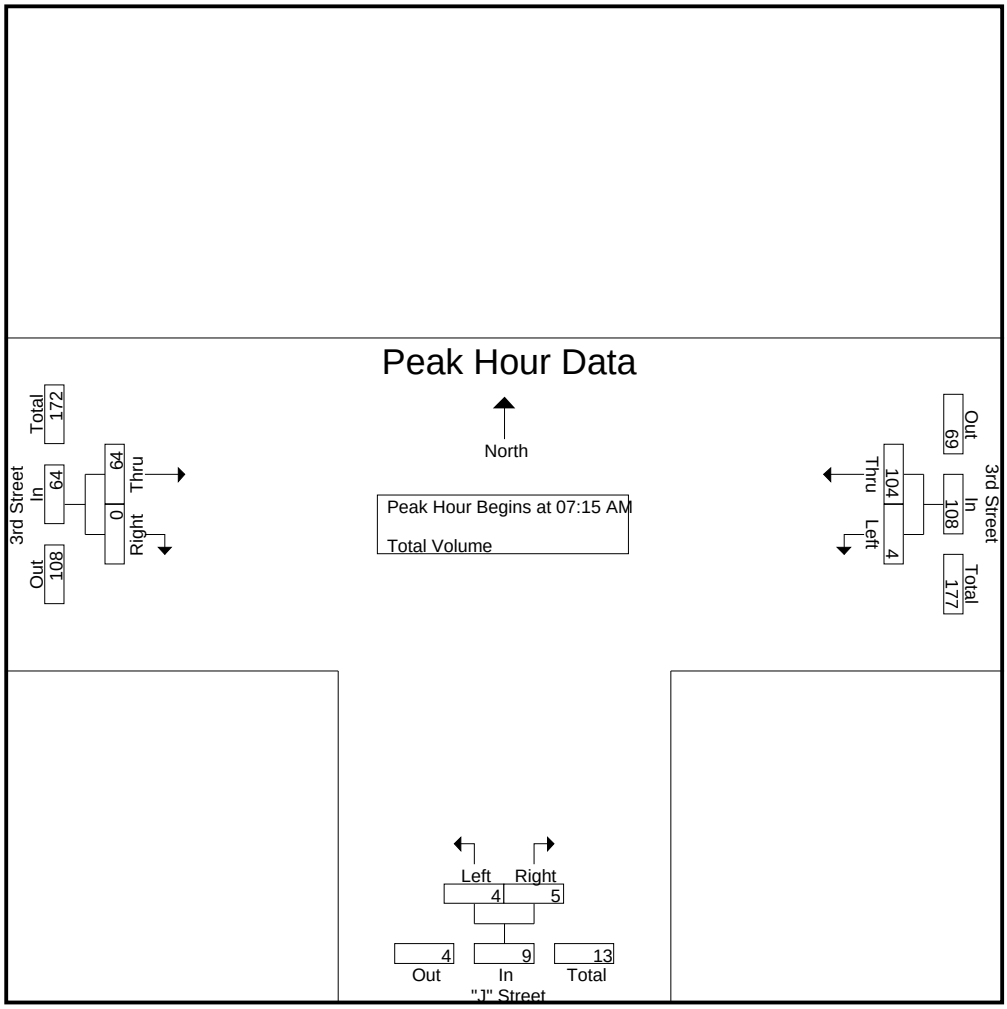

Peak Hour Analysis From 07:00 AM to 08:45 AM - Peak 1 of 1

Peak Hour for Each Approach Begins at:

	07:00 AM			07:30 AM			07:15 AM		
+0 mins.	**2**	**35**	**37**	0	2	2	**21**	0	**21**
+15 mins.	0	24	24	**4**	0	**4**	12	0	12
+30 mins.	1	21	22	0	**3**	3	19	0	19
+45 mins.	1	28	29	1	2	3	12	0	12
Total Volume	4	108	112	5	7	12	64	0	64
% App. Total	3.6	96.4		41.7	58.3		100	0	
PHF	.500	.771	.757	.313	.583	.750	.762	.000	.762

Counts Unlimited Inc.
25286 Jaclyn Avenue
Moreno Valley, CA 92557
(951) 485-7934

City of San Bernardino
N/S: "J" Street
E/W: 3rd Street
Weather: Sunny

File Name : SBCJ3PM
Site Code : 10089159
Start Date : 4/21/2010
Page No : 1

Groups Printed- Total Volume

	3rd Street Westbound			"J" Street Northbound			3rd Street Eastbound			
Start Time	Left	Thru	App. Total	Left	Right	App. Total	Thru	Right	App. Total	Int. Total
04:00 PM	3	33	36	0	2	2	13	0	13	51
04:15 PM	5	31	36	0	6	6	18	1	19	61
04:30 PM	1	31	32	2	3	5	11	1	12	49
04:45 PM	3	32	35	1	2	3	20	1	21	59
Total	12	127	139	3	13	16	62	3	65	220
05:00 PM	4	35	39	0	1	1	15	0	15	55
05:15 PM	3	37	40	0	4	4	21	1	22	66
05:30 PM	7	47	54	0	3	3	12	0	12	69
05:45 PM	5	36	41	1	2	3	38	0	38	82
Total	19	155	174	1	10	11	86	1	87	272
Grand Total	31	282	313	4	23	27	148	4	152	492
Apprch %	9.9	90.1		14.8	85.2		97.4	2.6		
Total %	6.3	57.3	63.6	0.8	4.7	5.5	30.1	0.8	30.9	

	3rd Street Westbound			"J" Street Northbound			3rd Street Eastbound			
Start Time	Left	Thru	App. Total	Left	Right	App. Total	Thru	Right	App. Total	Int. Total
Peak Hour Analysis From 04:00 PM to 05:45 PM - Peak 1 of 1										
Peak Hour for Entire Intersection Begins at 05:00 PM										
05:00 PM	4	35	39	0	1	1	15	0	15	55
05:15 PM	3	37	40	0	**4**	**4**	21	**1**	22	66
05:30 PM	**7**	**47**	**54**	0	3	3	12	0	12	69
05:45 PM	5	36	41	**1**	2	3	**38**	0	**38**	**82**
Total Volume	19	155	174	1	10	11	86	1	87	272
% App. Total	10.9	89.1		9.1	90.9		98.9	1.1		
PHF	.679	.824	.806	.250	.625	.688	.566	.250	.572	.829

Counts Unlimited Inc.
25286 Jaclyn Avenue
Moreno Valley, CA 92557
(951) 485-7934

City of San Bernardino
N/S: "J" Street
E/W: 3rd Street
Weather: Sunny

File Name : SBCJ3PM
Site Code : 10089159
Start Date : 4/21/2010
Page No : 2

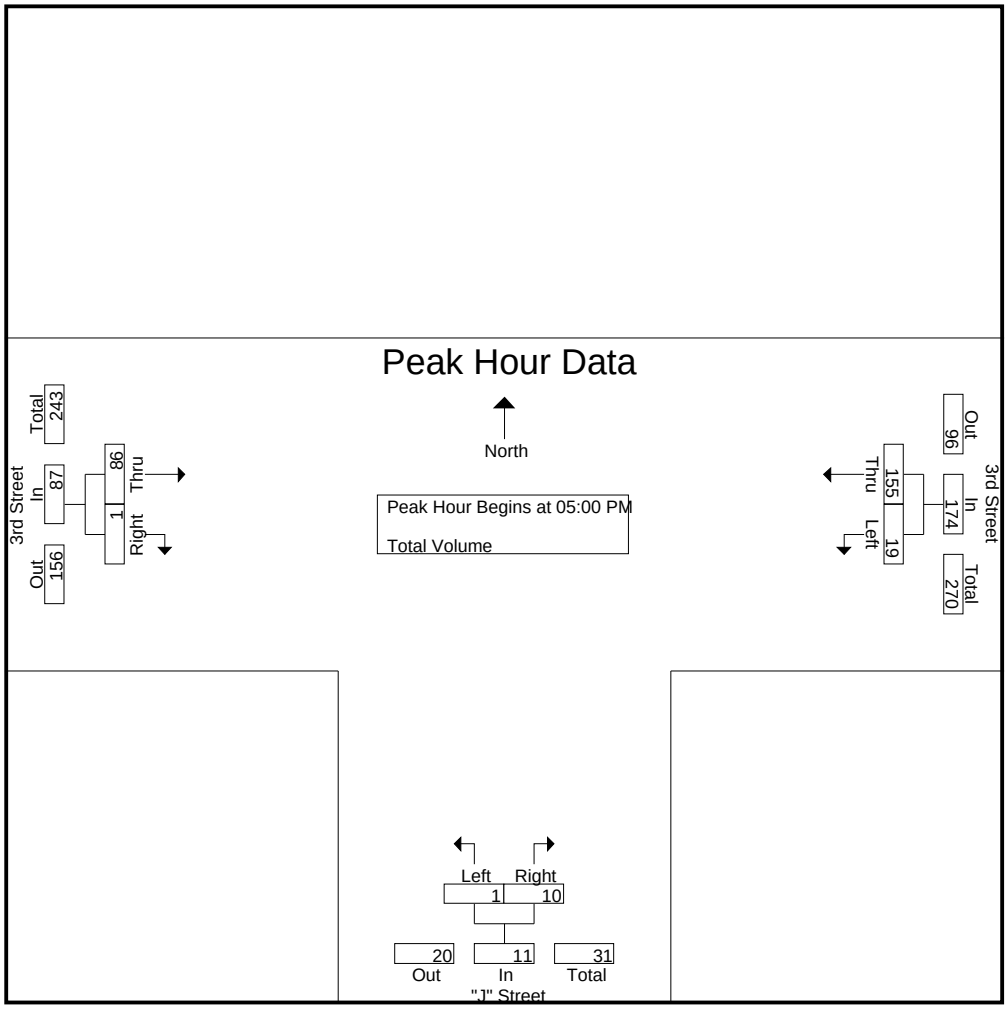

Peak Hour Analysis From 04:00 PM to 05:45 PM - Peak 1 of 1

Peak Hour for Each Approach Begins at:

	05:00 PM			04:00 PM			05:00 PM		
+0 mins.	4	35	39	0	2	2	15	0	15
+15 mins.	3	37	40	0	**6**	**6**	21	**1**	22
+30 mins.	**7**	**47**	**54**	**2**	3	5	12	0	12
+45 mins.	5	36	41	1	2	3	**38**	0	**38**
Total Volume	19	155	174	3	13	16	86	1	87
% App. Total	10.9	89.1		18.8	81.2		98.9	1.1	
PHF	.679	.824	.806	.375	.542	.667	.566	.250	.572

Counts Unlimited Inc.
25286 Jaclyn Avenue
Moreno Valley, CA 92557
(951) 485-7934

City of San Bernardino
N/S: "J" Street
2nd Street
Weather: Sunny

File Name : SBCJ2AM
Site Code : 10089098
Start Date : 4/21/2010
Page No : 1

Groups Printed- Passenger Vehicles - Large 2 Axle Vehicles - 3 Axle Vehicles - 4+ Axle Trucks

	"J" Street Southbound				2nd Street Westbound				"J" Street Northbound				2nd Street Eastbound				
Start Time	Left	Thru	Right	App. Total	Left	Thru	Right	App. Total	Left	Thru	Right	App. Total	Left	Thru	Right	App. Total	Int. Total
07:00 AM	0	2	0	2	2	43	1	46	0	0	7	7	0	69	1	70	125
07:15 AM	0	0	0	0	3	36	2	41	0	1	14	15	0	84	1	85	141
07:30 AM	1	1	0	2	1	37	1	39	1	2	9	12	0	113	0	113	166
07:45 AM	1	0	0	1	2	57	3	62	1	0	13	14	2	106	2	110	187
Total	2	3	0	5	8	173	7	188	2	3	43	48	2	372	4	378	619
08:00 AM	1	0	0	1	2	53	2	57	0	2	17	19	0	79	2	81	158
08:15 AM	1	2	1	4	3	45	0	48	1	1	3	5	2	76	0	78	135
08:30 AM	3	4	0	7	3	39	1	43	2	1	12	15	0	60	2	62	127
08:45 AM	0	1	1	2	1	33	0	34	2	0	8	10	3	57	1	61	107
Total	5	7	2	14	9	170	3	182	5	4	40	49	5	272	5	282	527
Grand Total	7	10	2	19	17	343	10	370	7	7	83	97	7	644	9	660	1146
Apprch %	36.8	52.6	10.5		4.6	92.7	2.7		7.2	7.2	85.6		1.1	97.6	1.4		
Total %	0.6	0.9	0.2	1.7	1.5	29.9	0.9	32.3	0.6	0.6	7.2	8.5	0.6	56.2	0.8	57.6	
Passenger Vehicles	7	9	2	18	17	326	9	352	6	6	76	88	5	606	8	619	1077
% Passenger Vehicles	100	90	100	94.7	100	95	90	95.1	85.7	85.7	91.6	90.7	71.4	94.1	88.9	93.8	94
Large 2 Axle Vehicles	0	0	0	0	0	4	0	4	0	1	4	5	2	12	0	14	23
% Large 2 Axle Vehicles	0	0	0	0	0	1.2	0	1.1	0	14.3	4.8	5.2	28.6	1.9	0	2.1	2
3 Axle Vehicles	0	1	0	1	0	3	1	4	1	0	1	2	0	2	1	3	10
% 3 Axle Vehicles	0	10	0	5.3	0	0.9	10	1.1	14.3	0	1.2	2.1	0	0.3	11.1	0.5	0.9
4+ Axle Trucks	0	0	0	0	0	10	0	10	0	0	2	2	0	24	0	24	36
% 4+ Axle Trucks	0	0	0	0	0	2.9	0	2.7	0	0	2.4	2.1	0	3.7	0	3.6	3.1

	"J" Street Southbound				2nd Street Westbound				"J" Street Northbound				2nd Street Eastbound				
Start Time	Left	Thru	Right	App. Total	Left	Thru	Right	App. Total	Left	Thru	Right	App. Total	Left	Thru	Right	App. Total	Int. Total
Peak Hour Analysis From 07:00 AM to 08:45 AM - Peak 1 of 1																	
Peak Hour for Entire Intersection Begins at 07:15 AM																	
07:15 AM	0	0	0	0	**3**	36	2	41	0	1	14	15	0	84	1	85	141
07:30 AM	**1**	**1**	0	**2**	1	37	1	39	**1**	**2**	9	12	0	**113**	0	**113**	166
07:45 AM	1	0	0	1	2	**57**	**3**	**62**	1	0	13	14	**2**	106	**2**	110	**187**
08:00 AM	1	0	0	1	2	53	2	57	0	2	**17**	**19**	0	79	2	81	158
Total Volume	3	1	0	4	8	183	8	199	2	5	53	60	2	382	5	389	652
% App. Total	75	25	0		4	92	4		3.3	8.3	88.3		0.5	98.2	1.3		
PHF	.750	.250	.000	.500	.667	.803	.667	.802	.500	.625	.779	.789	.250	.845	.625	.861	.872

Counts Unlimited Inc.
25286 Jaclyn Avenue
Moreno Valley, CA 92557
(951) 485-7934

City of San Bernardino
N/S: "J" Street
2nd Street
Weather: Sunny

File Name : SBCJ2AM
Site Code : 10089098
Start Date : 4/21/2010
Page No : 2

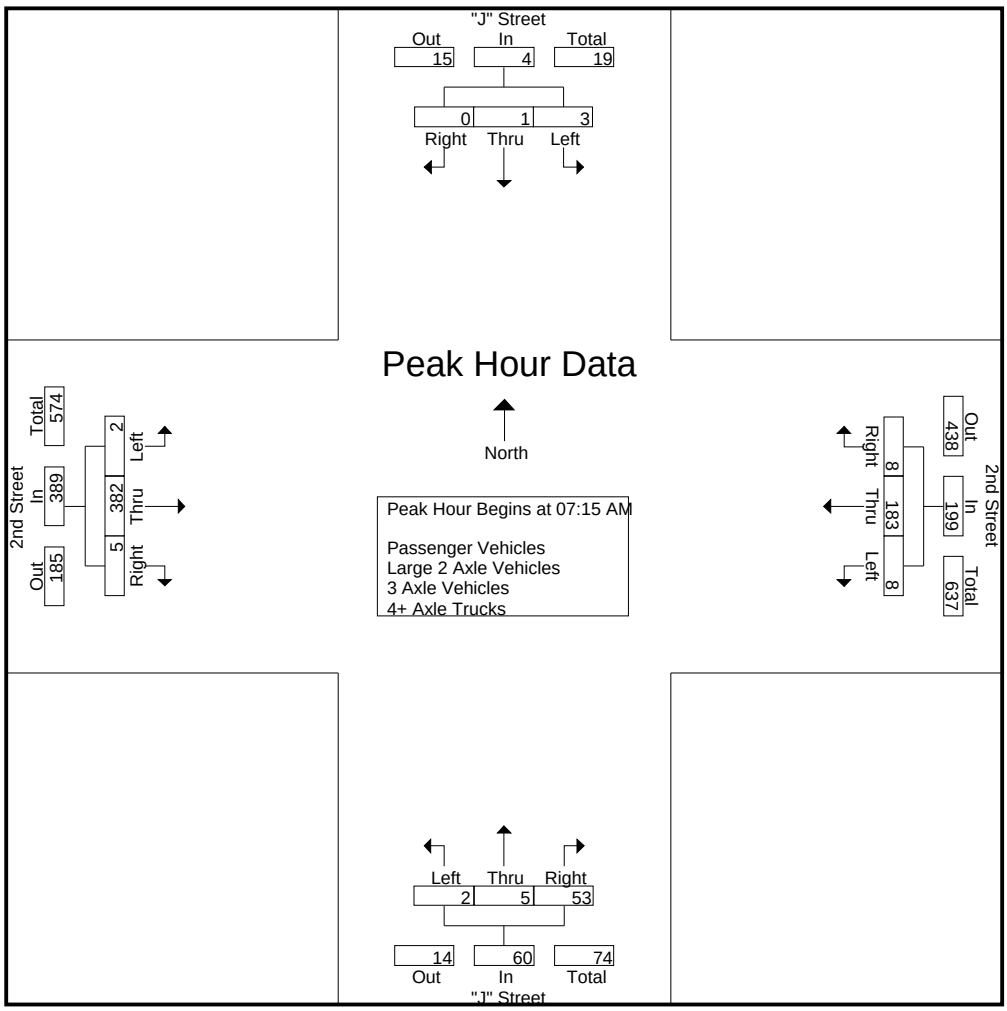

Peak Hour Analysis From 07:00 AM to 08:45 AM - Peak 1 of 1

Peak Hour for Each Approach Begins at:

	08:00 AM				07:45 AM				07:15 AM				07:15 AM			
+0 mins.	1	0	0	1	2	**57**	**3**	**62**	0	1	14	15	0	84	1	85
+15 mins.	1	2	**1**	4	2	53	2	57	**1**	**2**	9	12	0	**113**	0	**113**
+30 mins.	**3**	**4**	0	**7**	**3**	45	0	48	1	0	13	14	**2**	106	**2**	110
+45 mins.	0	1	1	2	3	39	1	43	0	2	**17**	**19**	0	79	2	81
Total Volume	5	7	2	14	10	194	6	210	2	5	53	60	2	382	5	389
% App. Total	35.7	50	14.3		4.8	92.4	2.9		3.3	8.3	88.3		0.5	98.2	1.3	
PHF	.417	.438	.500	.500	.833	.851	.500	.847	.500	.625	.779	.789	.250	.845	.625	.861

Counts Unlimited Inc.
25286 Jaclyn Avenue
Moreno Valley, CA 92557
(951) 485-7934

City of San Bernardino
N/S: "J" Street
2nd Street
Weather: Sunny

File Name : SBCJ2AM
Site Code : 10089098
Start Date : 4/21/2010
Page No : 1

Groups Printed- Passenger Vehicles

	"J" Street Southbound				2nd Street Westbound				"J" Street Northbound				2nd Street Eastbound				
Start Time	Left	Thru	Right	App. Total	Left	Thru	Right	App. Total	Left	Thru	Right	App. Total	Left	Thru	Right	App. Total	Int. Total
07:00 AM	0	2	0	2	2	38	1	41	0	0	7	7	0	66	1	67	117
07:15 AM	0	0	0	0	3	36	2	41	0	1	12	13	0	81	1	82	136
07:30 AM	1	1	0	2	1	34	1	36	1	2	7	10	0	109	0	109	157
07:45 AM	1	0	0	1	2	54	3	59	1	0	13	14	0	101	2	103	177
Total	2	3	0	5	8	162	7	177	2	3	39	44	0	357	4	361	587
08:00 AM	1	0	0	1	2	52	1	55	0	2	17	19	0	74	2	76	151
08:15 AM	1	1	1	3	3	42	0	45	0	0	3	3	2	70	0	72	123
08:30 AM	3	4	0	7	3	38	1	42	2	1	11	14	0	56	1	57	120
08:45 AM	0	1	1	2	1	32	0	33	2	0	6	8	3	49	1	53	96
Total	5	6	2	13	9	164	2	175	4	3	37	44	5	249	4	258	490
Grand Total	7	9	2	18	17	326	9	352	6	6	76	88	5	606	8	619	1077
Apprch %	38.9	50	11.1		4.8	92.6	2.6		6.8	6.8	86.4		0.8	97.9	1.3		
Total %	0.6	0.8	0.2	1.7	1.6	30.3	0.8	32.7	0.6	0.6	7.1	8.2	0.5	56.3	0.7	57.5	

	"J" Street Southbound				2nd Street Westbound				"J" Street Northbound				2nd Street Eastbound				
Start Time	Left	Thru	Right	App. Total	Left	Thru	Right	App. Total	Left	Thru	Right	App. Total	Left	Thru	Right	App. Total	Int. Total
Peak Hour Analysis From 07:15 AM to 08:00 AM - Peak 1 of 1																	
Peak Hour for Entire Intersection Begins at 07:15 AM																	
07:15 AM	0	0	0	0	**3**	36	2	41	0	1	12	13	0	81	1	82	136
07:30 AM	**1**	**1**	0	**2**	1	34	1	36	**1**	**2**	7	10	0	**109**	0	**109**	157
07:45 AM	1	0	0	1	2	**54**	**3**	**59**	1	0	13	14	0	101	**2**	103	**177**
08:00 AM	1	0	0	1	2	52	1	55	0	2	**17**	**19**	0	74	2	76	151
Total Volume	3	1	0	4	8	176	7	191	2	5	49	56	0	365	5	370	621
% App. Total	75	25	0		4.2	92.1	3.7		3.6	8.9	87.5		0	98.6	1.4		
PHF	.750	.250	.000	.500	.667	.815	.583	.809	.500	.625	.721	.737	.000	.837	.625	.849	.877

Counts Unlimited Inc.
25286 Jaclyn Avenue
Moreno Valley, CA 92557
(951) 485-7934

City of San Bernardino
N/S: "J" Street
2nd Street
Weather: Sunny

File Name : SBCJ2AM
Site Code : 10089098
Start Date : 4/21/2010
Page No : 2

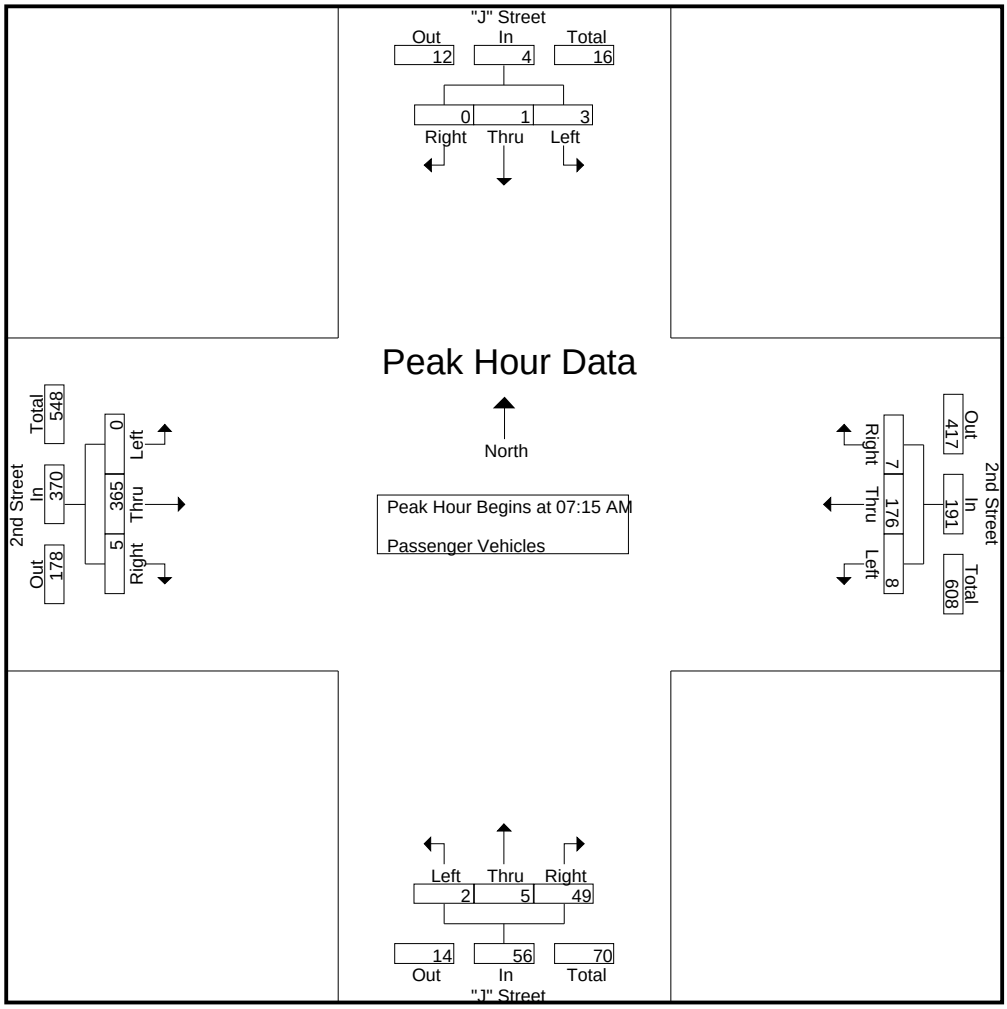

Peak Hour Analysis From 07:15 AM to 08:00 AM - Peak 1 of 1

Peak Hour for Each Approach Begins at:

	07:15 AM				07:15 AM				07:15 AM				07:15 AM			
+0 mins.	0	0	0	0	**3**	36	2	41	0	1	12	13	0	81	1	82
+15 mins.	**1**	**1**	0	**2**	1	34	1	36	**1**	**2**	7	10	0	**109**	0	**109**
+30 mins.	1	0	0	1	2	**54**	**3**	**59**	1	0	13	14	0	101	**2**	103
+45 mins.	1	0	0	1	2	52	1	55	0	2	**17**	**19**	0	74	2	76
Total Volume	3	1	0	4	8	176	7	191	2	5	49	56	0	365	5	370
% App. Total	75	25	0		4.2	92.1	3.7		3.6	8.9	87.5		0	98.6	1.4	
PHF	.750	.250	.000	.500	.667	.815	.583	.809	.500	.625	.721	.737	.000	.837	.625	.849

Counts Unlimited Inc.
25286 Jaclyn Avenue
Moreno Valley, CA 92557
(951) 485-7934

City of San Bernardino
N/S: "J" Street
2nd Street
Weather: Sunny

File Name : SBCJ2AM
Site Code : 10089098
Start Date : 4/21/2010
Page No : 1

Groups Printed- Large 2 Axle Vehicles

	"J" Street Southbound				2nd Street Westbound				"J" Street Northbound				2nd Street Eastbound				
Start Time	Left	Thru	Right	App. Total	Left	Thru	Right	App. Total	Left	Thru	Right	App. Total	Left	Thru	Right	App. Total	Int. Total
07:00 AM	0	0	0	0	0	2	0	2	0	0	0	0	0	0	0	0	2
07:15 AM	0	0	0	0	0	0	0	0	0	0	2	2	0	0	0	0	2
07:30 AM	0	0	0	0	0	1	0	1	0	0	2	2	0	0	0	0	3
07:45 AM	0	0	0	0	0	1	0	1	0	0	0	0	2	0	0	2	3
Total	0	0	0	0	0	4	0	4	0	0	4	4	2	0	0	2	10
08:00 AM	0	0	0	0	0	0	0	0	0	0	0	0	0	1	0	1	1
08:15 AM	0	0	0	0	0	0	0	0	0	1	0	1	0	3	0	3	4
08:30 AM	0	0	0	0	0	0	0	0	0	0	0	0	0	2	0	2	2
08:45 AM	0	0	0	0	0	0	0	0	0	0	0	0	0	6	0	6	6
Total	0	0	0	0	0	0	0	0	0	1	0	1	0	12	0	12	13
Grand Total	0	0	0	0	0	4	0	4	0	1	4	5	2	12	0	14	23
Apprch %	0	0	0		0	100	0		0	20	80		14.3	85.7	0		
Total %	0	0	0	0	0	17.4	0	17.4	0	4.3	17.4	21.7	8.7	52.2	0	60.9	

	"J" Street Southbound				2nd Street Westbound				"J" Street Northbound				2nd Street Eastbound				
Start Time	Left	Thru	Right	App. Total	Left	Thru	Right	App. Total	Left	Thru	Right	App. Total	Left	Thru	Right	App. Total	Int. Total
Peak Hour Analysis From 07:15 AM to 08:00 AM - Peak 1 of 1																	
Peak Hour for Entire Intersection Begins at 07:15 AM																	
07:15 AM	0	0	0	0	0	0	0	0	0	0	**2**	**2**	0	0	0	0	2
07:30 AM	0	0	0	0	0	**1**	0	**1**	0	0	2	2	0	0	0	0	**3**
07:45 AM	0	0	0	0	0	1	0	1	0	0	0	0	**2**	0	0	**2**	3
08:00 AM	0	0	0	0	0	0	0	0	0	0	0	0	0	**1**	0	1	1
Total Volume	0	0	0	0	0	2	0	2	0	0	4	4	2	1	0	3	9
% App. Total	0	0	0		0	100	0		0	0	100		66.7	33.3	0		
PHF	.000	.000	.000	.000	.000	.500	.000	.500	.000	.000	.500	.500	.250	.250	.000	.375	.750

Counts Unlimited Inc.
25286 Jaclyn Avenue
Moreno Valley, CA 92557
(951) 485-7934

City of San Bernardino
N/S: "J" Street
2nd Street
Weather: Sunny

File Name : SBCJ2AM
Site Code : 10089098
Start Date : 4/21/2010
Page No : 2

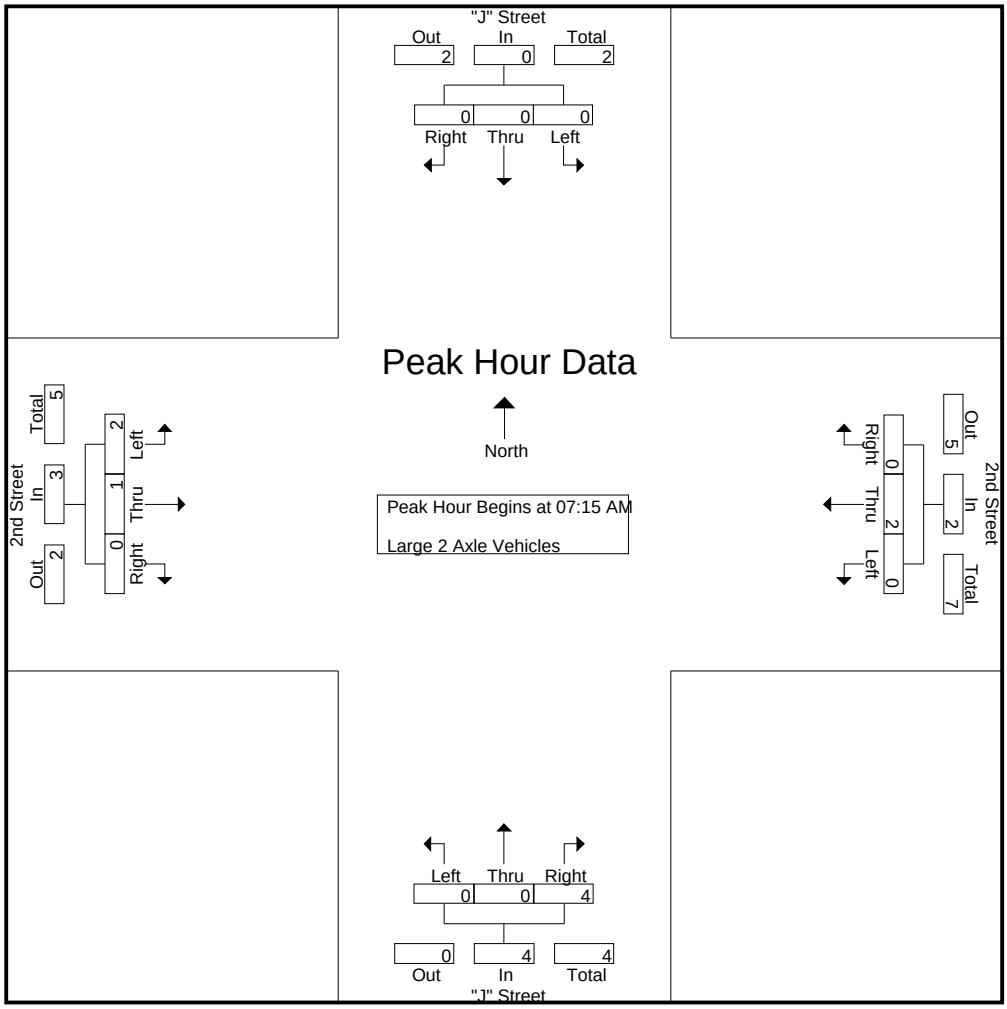

Peak Hour Analysis From 07:15 AM to 08:00 AM - Peak 1 of 1

Peak Hour for Each Approach Begins at:

	07:15 AM				07:15 AM				07:15 AM				07:15 AM			
+0 mins.	0	0	0	0	0	0	0	0	0	0	**2**	**2**	0	0	0	0
+15 mins.	0	0	0	0	0	**1**	0	**1**	0	0	2	2	0	0	0	0
+30 mins.	0	0	0	0	0	1	0	1	0	0	0	0	**2**	0	0	**2**
+45 mins.	0	0	0	0	0	0	0	0	0	0	0	0	0	**1**	0	1
Total Volume	0	0	0	0	0	2	0	2	0	0	4	4	2	1	0	3
% App. Total	0	0	0		0	100	0		0	0	100		66.7	33.3	0	
PHF	.000	.000	.000	.000	.000	.500	.000	.500	.000	.000	.500	.500	.250	.250	.000	.375

Counts Unlimited Inc.
25286 Jaclyn Avenue
Moreno Valley, CA 92557
(951) 485-7934

City of San Bernardino
N/S: "J" Street
2nd Street
Weather: Sunny

File Name : SBCJ2AM
Site Code : 10089098
Start Date : 4/21/2010
Page No : 1

Groups Printed- 3 Axle Vehicles

	"J" Street Southbound				2nd Street Westbound				"J" Street Northbound				2nd Street Eastbound				
Start Time	Left	Thru	Right	App. Total	Left	Thru	Right	App. Total	Left	Thru	Right	App. Total	Left	Thru	Right	App. Total	Int. Total
07:00 AM	0	0	0	0	0	0	0	0	0	0	0	0	0	0	0	0	0
07:15 AM	0	0	0	0	0	0	0	0	0	0	0	0	0	0	0	0	0
07:30 AM	0	0	0	0	0	0	0	0	0	0	0	0	0	0	0	0	0
07:45 AM	0	0	0	0	0	1	0	1	0	0	0	0	0	0	0	0	1
Total	0	0	0	0	0	1	0	1	0	0	0	0	0	0	0	0	1
08:00 AM	0	0	0	0	0	0	1	1	0	0	0	0	0	1	0	1	2
08:15 AM	0	1	0	1	0	1	0	1	1	0	0	1	0	0	0	0	3
08:30 AM	0	0	0	0	0	0	0	0	0	0	1	1	0	0	1	1	2
08:45 AM	0	0	0	0	0	1	0	1	0	0	0	0	0	1	0	1	2
Total	0	1	0	1	0	2	1	3	1	0	1	2	0	2	1	3	9
Grand Total	0	1	0	1	0	3	1	4	1	0	1	2	0	2	1	3	10
Apprch %	0	100	0		0	75	25		50	0	50		0	66.7	33.3		
Total %	0	10	0	10	0	30	10	40	10	0	10	20	0	20	10	30	

	"J" Street Southbound				2nd Street Westbound				"J" Street Northbound				2nd Street Eastbound				
Start Time	Left	Thru	Right	App. Total	Left	Thru	Right	App. Total	Left	Thru	Right	App. Total	Left	Thru	Right	App. Total	Int. Total
Peak Hour Analysis From 07:15 AM to 08:00 AM - Peak 1 of 1																	
Peak Hour for Entire Intersection Begins at 07:15 AM																	
07:15 AM	0	0	0	0	0	0	0	0	0	0	0	0	0	0	0	0	0
07:30 AM	0	0	0	0	0	0	0	0	0	0	0	0	0	0	0	0	0
07:45 AM	0	0	0	0	0	**1**	0	**1**	0	0	0	0	0	0	0	0	1
08:00 AM	0	0	0	0	0	0	**1**	1	0	0	0	0	0	**1**	0	**1**	**2**
Total Volume	0	0	0	0	0	1	1	2	0	0	0	0	0	1	0	1	3
% App. Total	0	0	0		0	50	50		0	0	0		0	100	0		
PHF	.000	.000	.000	.000	.000	.250	.250	.500	.000	.000	.000	.000	.000	.250	.000	.250	.375

Counts Unlimited Inc.
25286 Jaclyn Avenue
Moreno Valley, CA 92557
(951) 485-7934

City of San Bernardino
N/S: "J" Street
2nd Street
Weather: Sunny

File Name : SBCJ2AM
Site Code : 10089098
Start Date : 4/21/2010
Page No : 2

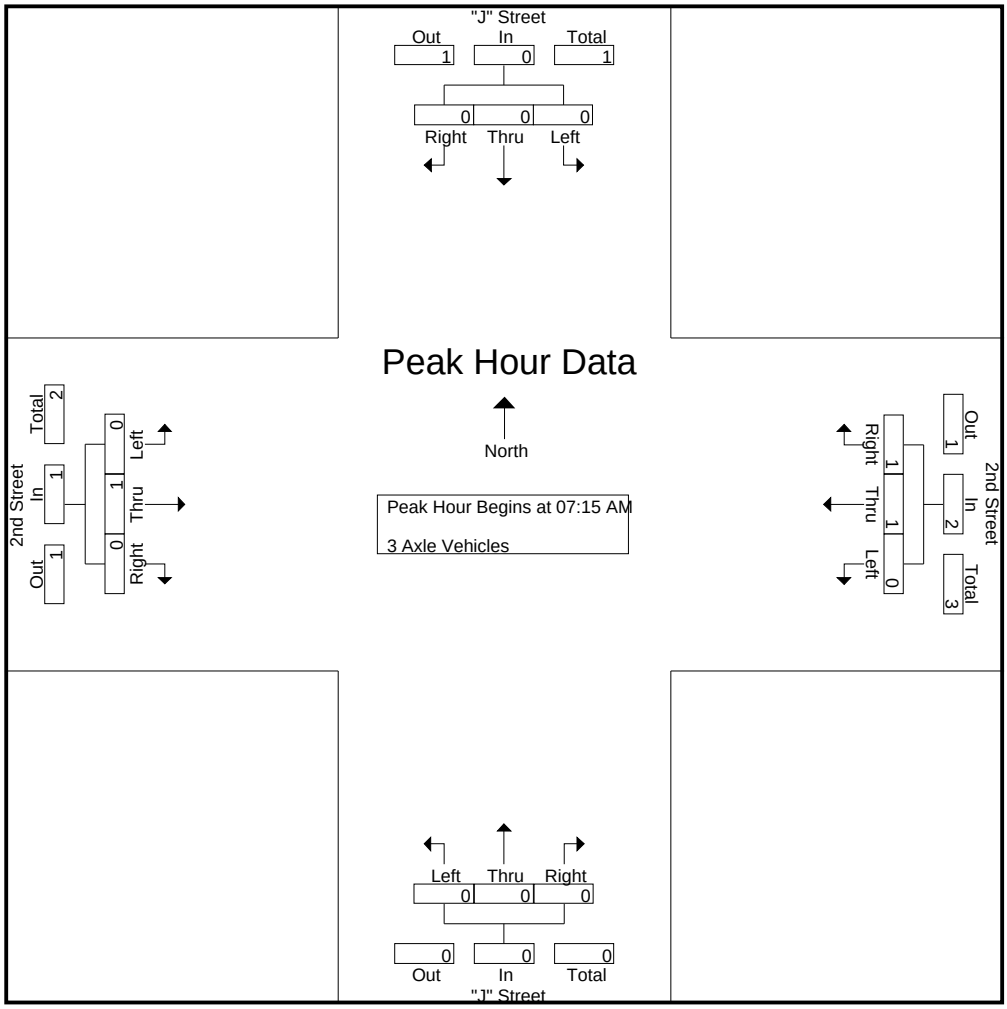

Peak Hour Analysis From 07:15 AM to 08:00 AM - Peak 1 of 1

Peak Hour for Each Approach Begins at:

	07:15 AM				07:15 AM				07:15 AM				07:15 AM			
+0 mins.	0	0	0	0	0	0	0	0	0	0	0	0	0	0	0	0
+15 mins.	0	0	0	0	0	0	0	0	0	0	0	0	0	0	0	0
+30 mins.	0	0	0	0	0	**1**	0	**1**	0	0	0	0	0	0	0	0
+45 mins.	0	0	0	0	0	0	**1**	1	0	0	0	0	0	**1**	0	**1**
Total Volume	0	0	0	0	0	1	1	2	0	0	0	0	0	1	0	1
% App. Total	0	0	0		0	50	50		0	0	0		0	100	0	
PHF	.000	.000	.000	.000	.000	.250	.250	.500	.000	.000	.000	.000	.000	.250	.000	.250

Counts Unlimited Inc.
25286 Jaclyn Avenue
Moreno Valley, CA 92557
(951) 485-7934

City of San Bernardino
N/S: "J" Street
2nd Street
Weather: Sunny

File Name : SBCJ2AM
Site Code : 10089098
Start Date : 4/21/2010
Page No : 1

Groups Printed- 4+ Axle Trucks

	"J" Street Southbound				2nd Street Westbound				"J" Street Northbound				2nd Street Eastbound				
Start Time	Left	Thru	Right	App. Total	Left	Thru	Right	App. Total	Left	Thru	Right	App. Total	Left	Thru	Right	App. Total	Int. Total
07:00 AM	0	0	0	0	0	3	0	3	0	0	0	0	0	3	0	3	6
07:15 AM	0	0	0	0	0	0	0	0	0	0	0	0	0	3	0	3	3
07:30 AM	0	0	0	0	0	2	0	2	0	0	0	0	0	4	0	4	6
07:45 AM	0	0	0	0	0	1	0	1	0	0	0	0	0	5	0	5	6
Total	0	0	0	0	0	6	0	6	0	0	0	0	0	15	0	15	21
08:00 AM	0	0	0	0	0	1	0	1	0	0	0	0	0	3	0	3	4
08:15 AM	0	0	0	0	0	2	0	2	0	0	0	0	0	3	0	3	5
08:30 AM	0	0	0	0	0	1	0	1	0	0	0	0	0	2	0	2	3
08:45 AM	0	0	0	0	0	0	0	0	0	0	2	2	0	1	0	1	3
Total	0	0	0	0	0	4	0	4	0	0	2	2	0	9	0	9	15
Grand Total	0	0	0	0	0	10	0	10	0	0	2	2	0	24	0	24	36
Apprch %	0	0	0		0	100	0		0	0	100		0	100	0		
Total %	0	0	0	0	0	27.8	0	27.8	0	0	5.6	5.6	0	66.7	0	66.7	

	"J" Street Southbound				2nd Street Westbound				"J" Street Northbound				2nd Street Eastbound				
Start Time	Left	Thru	Right	App. Total	Left	Thru	Right	App. Total	Left	Thru	Right	App. Total	Left	Thru	Right	App. Total	Int. Total
Peak Hour Analysis From 07:15 AM to 08:00 AM - Peak 1 of 1																	
Peak Hour for Entire Intersection Begins at 07:15 AM																	
07:15 AM	0	0	0	0	0	0	0	0	0	0	0	0	0	3	0	3	3
07:30 AM	0	0	0	0	0	**2**	0	**2**	0	0	0	0	0	4	0	4	**6**
07:45 AM	0	0	0	0	0	1	0	1	0	0	0	0	0	**5**	0	**5**	6
08:00 AM	0	0	0	0	0	1	0	1	0	0	0	0	0	3	0	3	4
Total Volume	0	0	0	0	0	4	0	4	0	0	0	0	0	15	0	15	19
% App. Total	0	0	0		0	100	0		0	0	0		0	100	0		
PHF	.000	.000	.000	.000	.000	.500	.000	.500	.000	.000	.000	.000	.000	.750	.000	.750	.792

Counts Unlimited Inc.
25286 Jaclyn Avenue
Moreno Valley, CA 92557
(951) 485-7934

City of San Bernardino
N/S: "J" Street
2nd Street
Weather: Sunny

File Name : SBCJ2AM
Site Code : 10089098
Start Date : 4/21/2010
Page No : 2

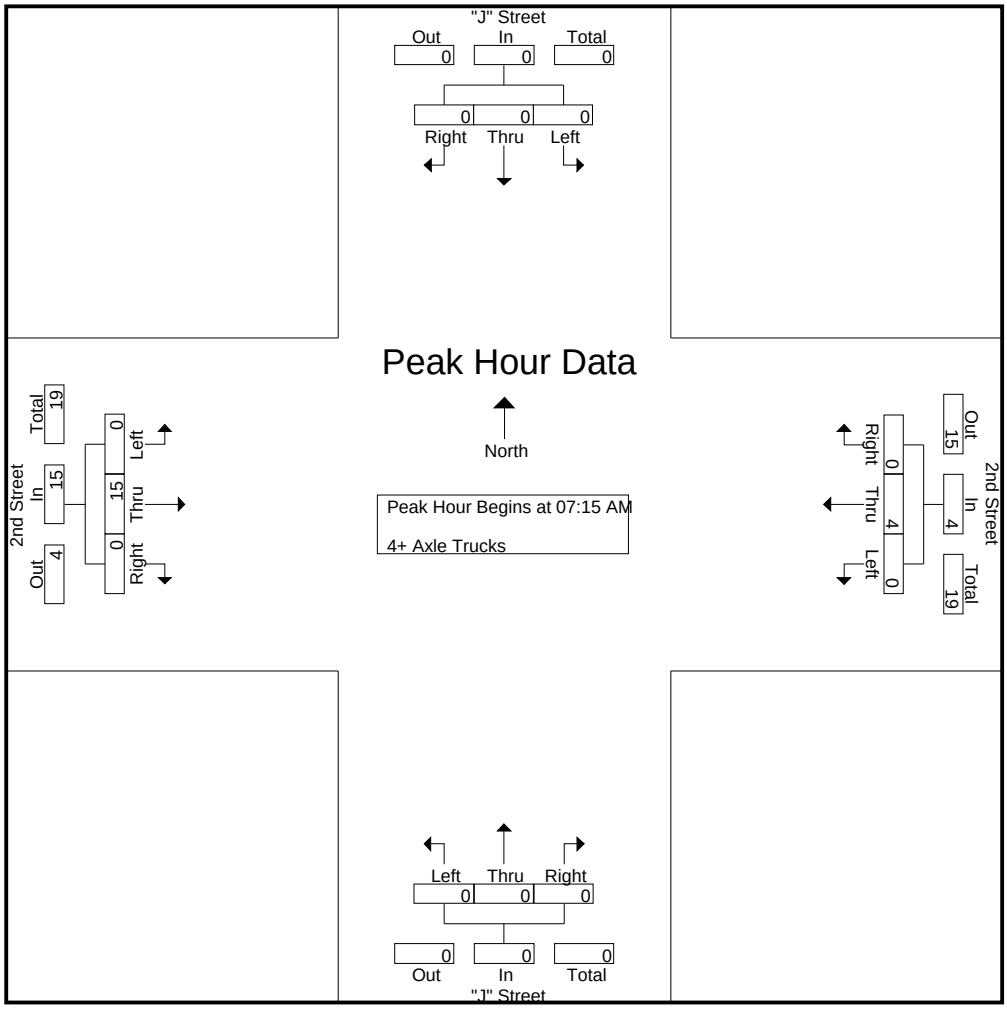

Peak Hour Analysis From 07:15 AM to 08:00 AM - Peak 1 of 1

Peak Hour for Each Approach Begins at:

	07:15 AM				07:15 AM				07:15 AM				07:15 AM			
+0 mins.	0	0	0	0	0	0	0	0	0	0	0	0	0	3	0	3
+15 mins.	0	0	0	0	0	**2**	0	**2**	0	0	0	0	0	4	0	4
+30 mins.	0	0	0	0	0	1	0	1	0	0	0	0	0	**5**	0	**5**
+45 mins.	0	0	0	0	0	1	0	1	0	0	0	0	0	3	0	3
Total Volume	0	0	0	0	0	4	0	4	0	0	0	0	0	15	0	15
% App. Total	0	0	0		0	100	0		0	0	0		0	100	0	
PHF	.000	.000	.000	.000	.000	.500	.000	.500	.000	.000	.000	.000	.000	.750	.000	.750

Counts Unlimited Inc.
25286 Jaclyn Avenue
Moreno Valley, CA 92557
(951) 485-7934

City of San Bernardino
N/S: "J" Street
E/W: 2nd Street
Weather: Sunny

File Name : SBCJ2PM
Site Code : 10089098
Start Date : 4/21/2010
Page No : 1

Groups Printed- Passenger Vehicles - Large 2 Axle Vehicles - 3 Axle Vehicles - 4+ Axle Trucks

	"J" Street Southbound				2nd Street Westbound				"J" Street Northbound				2nd Street Eastbound				
Start Time	Left	Thru	Right	App. Total	Left	Thru	Right	App. Total	Left	Thru	Right	App. Total	Left	Thru	Right	App. Total	Int. Total
04:00 PM	0	0	0	0	4	64	2	70	1	3	13	17	1	116	2	119	206
04:15 PM	0	1	1	2	2	51	1	54	0	2	4	6	0	68	2	70	132
04:30 PM	1	0	3	4	4	64	4	72	4	2	10	16	0	85	2	87	179
04:45 PM	1	1	2	4	4	63	2	69	1	4	7	12	3	117	4	124	209
Total	2	2	6	10	14	242	9	265	6	11	34	51	4	386	10	400	726
05:00 PM	2	1	1	4	2	68	3	73	5	0	6	11	1	103	1	105	193
05:15 PM	4	2	1	7	7	65	3	75	3	0	7	10	2	108	2	112	204
05:30 PM	0	2	0	2	1	84	0	85	1	1	5	7	0	114	3	117	211
05:45 PM	1	1	0	2	3	71	1	75	0	0	8	8	3	110	0	113	198
Total	7	6	2	15	13	288	7	308	9	1	26	36	6	435	6	447	806
Grand Total	9	8	8	25	27	530	16	573	15	12	60	87	10	821	16	847	1532
Apprch %	36	32	32		4.7	92.5	2.8		17.2	13.8	69		1.2	96.9	1.9		
Total %	0.6	0.5	0.5	1.6	1.8	34.6	1	37.4	1	0.8	3.9	5.7	0.7	53.6	1	55.3	
Passenger Vehicles	9	8	8	25	27	512	14	553	14	12	60	86	10	796	16	822	1486
% Passenger Vehicles	100	100	100	100	100	96.6	87.5	96.5	93.3	100	100	98.9	100	97	100	97	97
Large 2 Axle Vehicles	0	0	0	0	0	4	0	4	0	0	0	0	0	5	0	5	9
% Large 2 Axle Vehicles	0	0	0	0	0	0.8	0	0.7	0	0	0	0	0	0.6	0	0.6	0.6
3 Axle Vehicles	0	0	0	0	0	4	1	5	0	0	0	0	0	5	0	5	10
% 3 Axle Vehicles	0	0	0	0	0	0.8	6.2	0.9	0	0	0	0	0	0.6	0	0.6	0.7
4+ Axle Trucks	0	0	0	0	0	10	1	11	1	0	0	1	0	15	0	15	27
% 4+ Axle Trucks	0	0	0	0	0	1.9	6.2	1.9	6.7	0	0	1.1	0	1.8	0	1.8	1.8

	"J" Street Southbound				2nd Street Westbound				"J" Street Northbound				2nd Street Eastbound				
Start Time	Left	Thru	Right	App. Total	Left	Thru	Right	App. Total	Left	Thru	Right	App. Total	Left	Thru	Right	App. Total	Int. Total
Peak Hour Analysis From 04:00 PM to 05:45 PM - Peak 1 of 1																	
Peak Hour for Entire Intersection Begins at 04:45 PM																	
04:45 PM	1	1	**2**	4	4	63	2	69	1	**4**	**7**	**12**	**3**	**117**	**4**	**124**	209
05:00 PM	2	1	1	4	2	68	**3**	73	**5**	0	6	11	1	103	1	105	193
05:15 PM	**4**	**2**	1	**7**	**7**	65	3	75	3	0	7	10	2	108	2	112	204
05:30 PM	0	2	0	2	1	**84**	0	**85**	1	1	5	7	0	114	3	117	**211**
Total Volume	7	6	4	17	14	280	8	302	10	5	25	40	6	442	10	458	817
% App. Total	41.2	35.3	23.5		4.6	92.7	2.6		25	12.5	62.5		1.3	96.5	2.2		
PHF	.438	.750	.500	.607	.500	.833	.667	.888	.500	.313	.893	.833	.500	.944	.625	.923	.968

Counts Unlimited Inc.
25286 Jaclyn Avenue
Moreno Valley, CA 92557
(951) 485-7934

City of San Bernardino
N/S: "J" Street
E/W: 2nd Street
Weather: Sunny

File Name : SBCJ2PM
Site Code : 10089098
Start Date : 4/21/2010
Page No : 2

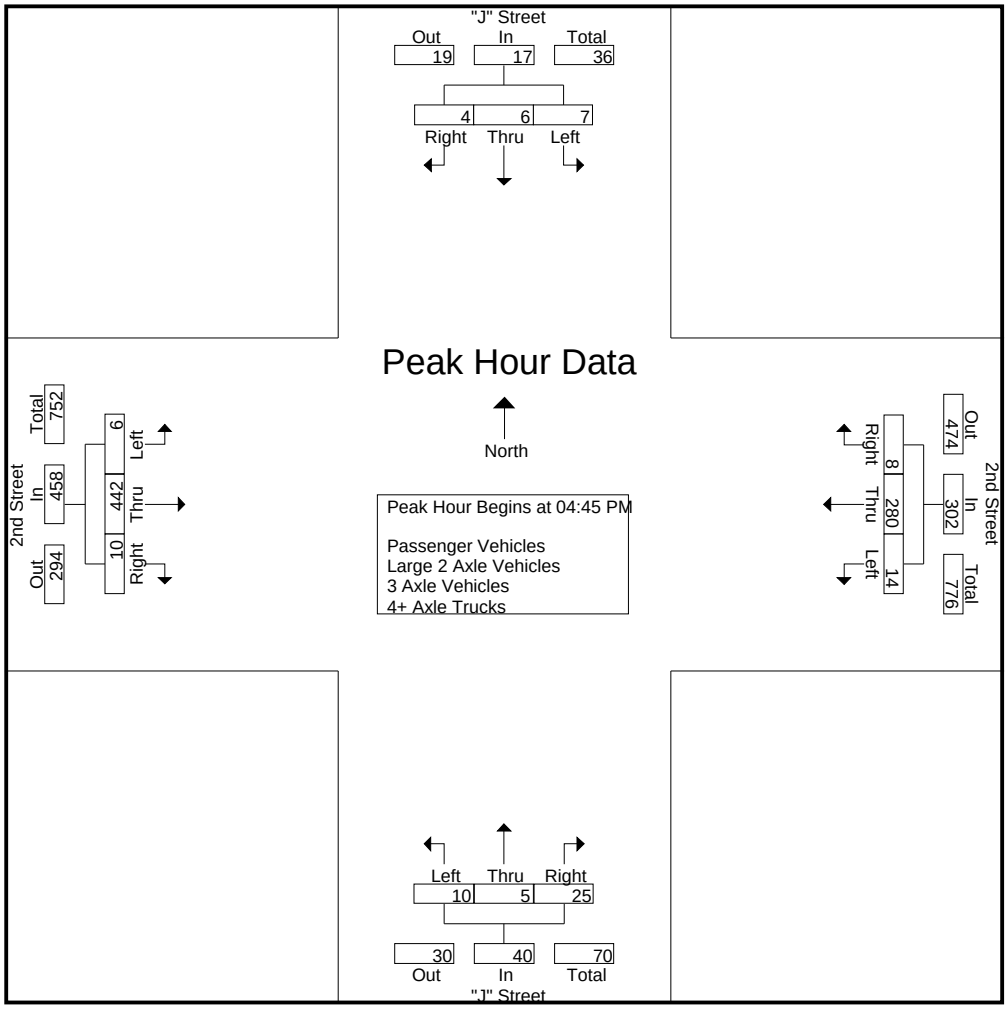

Peak Hour Analysis From 04:00 PM to 05:45 PM - Peak 1 of 1

Peak Hour for Each Approach Begins at:

	04:30 PM				05:00 PM				04:00 PM				04:45 PM			
+0 mins.	1	0	**3**	4	2	68	**3**	73	1	3	**13**	**17**	**3**	**117**	**4**	**124**
+15 mins.	1	1	2	4	**7**	65	3	75	0	2	4	6	1	103	1	105
+30 mins.	2	1	1	4	1	**84**	0	**85**	**4**	2	10	16	2	108	2	112
+45 mins.	**4**	**2**	1	**7**	3	71	1	75	1	**4**	7	12	0	114	3	117
Total Volume	8	4	7	19	13	288	7	308	6	11	34	51	6	442	10	458
% App. Total	42.1	21.1	36.8		4.2	93.5	2.3		11.8	21.6	66.7		1.3	96.5	2.2	
PHF	.500	.500	.583	.679	.464	.857	.583	.906	.375	.688	.654	.750	.500	.944	.625	.923

Counts Unlimited Inc.
25286 Jaclyn Avenue
Moreno Valley, CA 92557
(951) 485-7934

City of San Bernardino
N/S: "J" Street
E/W: 2nd Street
Weather: Sunny

File Name : SBCJ2PM
Site Code : 10089098
Start Date : 4/21/2010
Page No : 1

Groups Printed- Passenger Vehicles

	"J" Street Southbound				2nd Street Westbound				"J" Street Northbound				2nd Street Eastbound				
Start Time	Left	Thru	Right	App. Total	Left	Thru	Right	App. Total	Left	Thru	Right	App. Total	Left	Thru	Right	App. Total	Int. Total
04:00 PM	0	0	0	0	4	62	2	68	1	3	13	17	1	114	2	117	202
04:15 PM	0	1	1	2	2	47	1	50	0	2	4	6	0	68	2	70	128
04:30 PM	1	0	3	4	4	63	4	71	3	2	10	15	0	80	2	82	172
04:45 PM	1	1	2	4	4	61	2	67	1	4	7	12	3	116	4	123	206
Total	2	2	6	10	14	233	9	256	5	11	34	50	4	378	10	392	708
05:00 PM	2	1	1	4	2	66	3	71	5	0	6	11	1	98	1	100	186
05:15 PM	4	2	1	7	7	62	2	71	3	0	7	10	2	107	2	111	199
05:30 PM	0	2	0	2	1	82	0	83	1	1	5	7	0	109	3	112	204
05:45 PM	1	1	0	2	3	69	0	72	0	0	8	8	3	104	0	107	189
Total	7	6	2	15	13	279	5	297	9	1	26	36	6	418	6	430	778
Grand Total	9	8	8	25	27	512	14	553	14	12	60	86	10	796	16	822	1486
Apprch %	36	32	32		4.9	92.6	2.5		16.3	14	69.8		1.2	96.8	1.9		
Total %	0.6	0.5	0.5	1.7	1.8	34.5	0.9	37.2	0.9	0.8	4	5.8	0.7	53.6	1.1	55.3	

	"J" Street Southbound				2nd Street Westbound				"J" Street Northbound				2nd Street Eastbound				
Start Time	Left	Thru	Right	App. Total	Left	Thru	Right	App. Total	Left	Thru	Right	App. Total	Left	Thru	Right	App. Total	Int. Total
Peak Hour Analysis From 04:45 PM to 05:30 PM - Peak 1 of 1																	
Peak Hour for Entire Intersection Begins at 04:45 PM																	
04:45 PM	1	1	**2**	4	4	61	2	67	1	**4**	**7**	**12**	**3**	**116**	**4**	**123**	**206**
05:00 PM	2	1	1	4	2	66	**3**	71	**5**	0	6	11	1	98	1	100	186
05:15 PM	**4**	**2**	1	**7**	**7**	62	2	71	3	0	7	10	2	107	2	111	199
05:30 PM	0	2	0	2	1	**82**	0	**83**	1	1	5	7	0	109	3	112	204
Total Volume	7	6	4	17	14	271	7	292	10	5	25	40	6	430	10	446	795
% App. Total	41.2	35.3	23.5		4.8	92.8	2.4		25	12.5	62.5		1.3	96.4	2.2		
PHF	.438	.750	.500	.607	.500	.826	.583	.880	.500	.313	.893	.833	.500	.927	.625	.907	.965

Counts Unlimited Inc.
25286 Jaclyn Avenue
Moreno Valley, CA 92557
(951) 485-7934

City of San Bernardino
N/S: "J" Street
E/W: 2nd Street
Weather: Sunny

File Name : SBCJ2PM
Site Code : 10089098
Start Date : 4/21/2010
Page No : 2

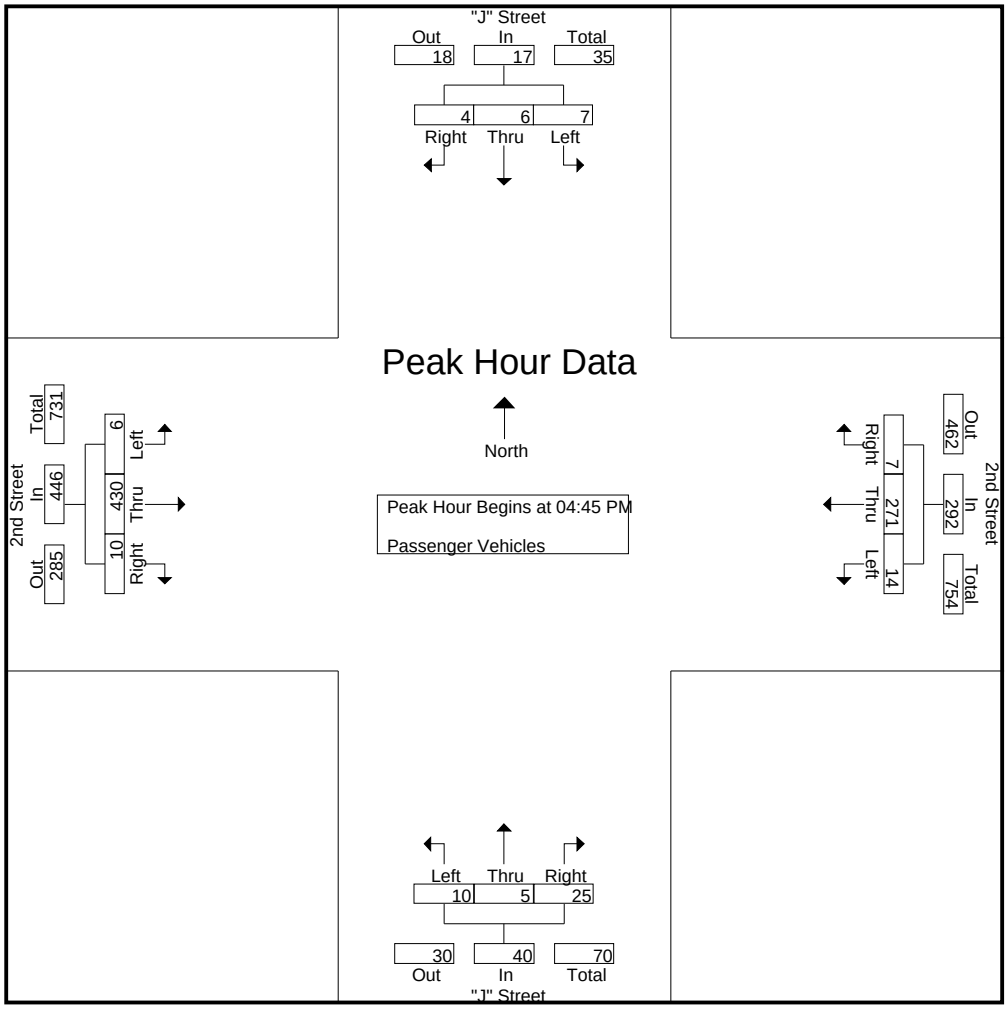

Peak Hour Analysis From 04:45 PM to 05:30 PM - Peak 1 of 1

Peak Hour for Each Approach Begins at:

	04:45 PM				04:45 PM				04:45 PM				04:45 PM			
+0 mins.	1	1	**2**	4	4	61	2	67	1	**4**	**7**	**12**	**3**	**116**	**4**	**123**
+15 mins.	2	1	1	4	2	66	**3**	71	**5**	0	6	11	1	98	1	100
+30 mins.	**4**	**2**	1	**7**	**7**	62	2	71	3	0	7	10	2	107	2	111
+45 mins.	0	2	0	2	1	**82**	0	**83**	1	1	5	7	0	109	3	112
Total Volume	7	6	4	17	14	271	7	292	10	5	25	40	6	430	10	446
% App. Total	41.2	35.3	23.5		4.8	92.8	2.4		25	12.5	62.5		1.3	96.4	2.2	
PHF	.438	.750	.500	.607	.500	.826	.583	.880	.500	.313	.893	.833	.500	.927	.625	.907

Counts Unlimited Inc.
25286 Jaclyn Avenue
Moreno Valley, CA 92557
(951) 485-7934

City of San Bernardino
N/S: "J" Street
E/W: 2nd Street
Weather: Sunny

File Name : SBCJ2PM
Site Code : 10089098
Start Date : 4/21/2010
Page No : 1

Groups Printed- Large 2 Axle Vehicles

	"J" Street Southbound				2nd Street Westbound				"J" Street Northbound				2nd Street Eastbound				
Start Time	Left	Thru	Right	App. Total	Left	Thru	Right	App. Total	Left	Thru	Right	App. Total	Left	Thru	Right	App. Total	Int. Total
04:00 PM	0	0	0	0	0	0	0	0	0	0	0	0	0	1	0	1	1
04:15 PM	0	0	0	0	0	2	0	2	0	0	0	0	0	0	0	0	2
04:30 PM	0	0	0	0	0	1	0	1	0	0	0	0	0	2	0	2	3
04:45 PM	0	0	0	0	0	1	0	1	0	0	0	0	0	0	0	0	1
Total	0	0	0	0	0	4	0	4	0	0	0	0	0	3	0	3	7
05:00 PM	0	0	0	0	0	0	0	0	0	0	0	0	0	1	0	1	1
05:15 PM	0	0	0	0	0	0	0	0	0	0	0	0	0	0	0	0	0
05:30 PM	0	0	0	0	0	0	0	0	0	0	0	0	0	0	0	0	0
05:45 PM	0	0	0	0	0	0	0	0	0	0	0	0	0	1	0	1	1
Total	0	0	0	0	0	0	0	0	0	0	0	0	0	2	0	2	2
Grand Total	0	0	0	0	0	4	0	4	0	0	0	0	0	5	0	5	9
Apprch %	0	0	0		0	100	0		0	0	0		0	100	0		
Total %	0	0	0	0	0	44.4	0	44.4	0	0	0	0	0	55.6	0	55.6	

	"J" Street Southbound				2nd Street Westbound				"J" Street Northbound				2nd Street Eastbound				
Start Time	Left	Thru	Right	App. Total	Left	Thru	Right	App. Total	Left	Thru	Right	App. Total	Left	Thru	Right	App. Total	Int. Total
Peak Hour Analysis From 04:45 PM to 05:30 PM - Peak 1 of 1																	
Peak Hour for Entire Intersection Begins at 04:45 PM																	
04:45 PM	0	0	0	0	0	**1**	0	**1**	0	0	0	0	0	0	0	0	**1**
05:00 PM	0	0	0	0	0	0	0	0	0	0	0	0	0	**1**	0	**1**	1
05:15 PM	0	0	0	0	0	0	0	0	0	0	0	0	0	0	0	0	0
05:30 PM	0	0	0	0	0	0	0	0	0	0	0	0	0	0	0	0	0
Total Volume	0	0	0	0	0	1	0	1	0	0	0	0	0	1	0	1	2
% App. Total	0	0	0		0	100	0		0	0	0		0	100	0		
PHF	.000	.000	.000	.000	.000	.250	.000	.250	.000	.000	.000	.000	.000	.250	.000	.250	.500

Counts Unlimited Inc.
25286 Jaclyn Avenue
Moreno Valley, CA 92557
(951) 485-7934

City of San Bernardino
N/S: "J" Street
E/W: 2nd Street
Weather: Sunny

File Name : SBCJ2PM
Site Code : 10089098
Start Date : 4/21/2010
Page No : 2

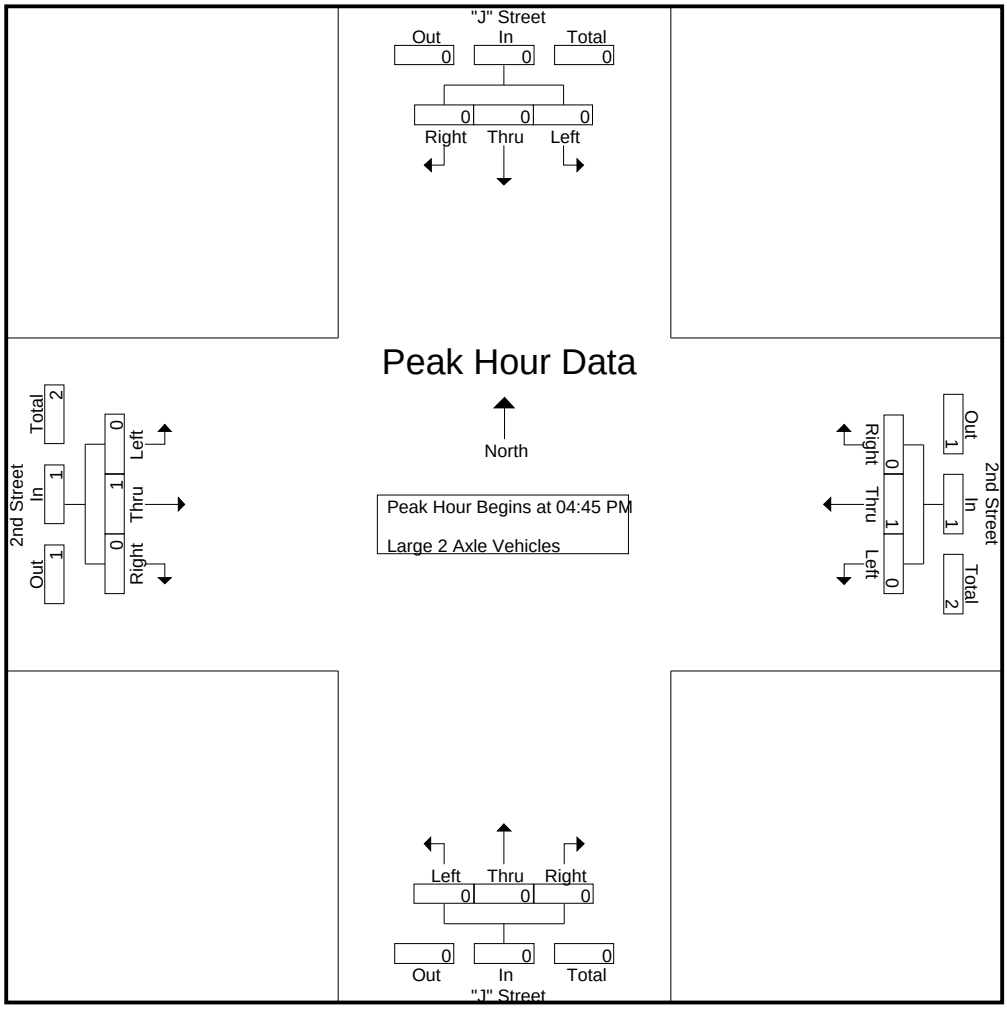

Peak Hour Analysis From 04:45 PM to 05:30 PM - Peak 1 of 1

Peak Hour for Each Approach Begins at:

	04:45 PM				04:45 PM				04:45 PM				04:45 PM			
+0 mins.	0	0	0	0	0	**1**	0	**1**	0	0	0	0	0	0	0	0
+15 mins.	0	0	0	0	0	0	0	0	0	0	0	0	0	**1**	0	**1**
+30 mins.	0	0	0	0	0	0	0	0	0	0	0	0	0	0	0	0
+45 mins.	0	0	0	0	0	0	0	0	0	0	0	0	0	0	0	0
Total Volume	0	0	0	0	0	1	0	1	0	0	0	0	0	1	0	1
% App. Total	0	0	0		0	100	0		0	0	0		0	100	0	
PHF	.000	.000	.000	.000	.000	.250	.000	.250	.000	.000	.000	.000	.000	.250	.000	.250

Counts Unlimited Inc.
25286 Jaclyn Avenue
Moreno Valley, CA 92557
(951) 485-7934

City of San Bernardino
N/S: "J" Street
E/W: 2nd Street
Weather: Sunny

File Name : SBCJ2PM
Site Code : 10089098
Start Date : 4/21/2010
Page No : 1

Groups Printed- 3 Axle Vehicles

	"J" Street Southbound				2nd Street Westbound				"J" Street Northbound				2nd Street Eastbound				
Start Time	Left	Thru	Right	App. Total	Left	Thru	Right	App. Total	Left	Thru	Right	App. Total	Left	Thru	Right	App. Total	Int. Total
04:00 PM	0	0	0	0	0	0	0	0	0	0	0	0	0	1	0	1	1
04:15 PM	0	0	0	0	0	0	0	0	0	0	0	0	0	0	0	0	0
04:30 PM	0	0	0	0	0	0	0	0	0	0	0	0	0	1	0	1	1
04:45 PM	0	0	0	0	0	0	0	0	0	0	0	0	0	1	0	1	1
Total	0	0	0	0	0	0	0	0	0	0	0	0	0	3	0	3	3
05:00 PM	0	0	0	0	0	1	0	1	0	0	0	0	0	0	0	0	1
05:15 PM	0	0	0	0	0	1	1	2	0	0	0	0	0	0	0	0	2
05:30 PM	0	0	0	0	0	2	0	2	0	0	0	0	0	1	0	1	3
05:45 PM	0	0	0	0	0	0	0	0	0	0	0	0	0	1	0	1	1
Total	0	0	0	0	0	4	1	5	0	0	0	0	0	2	0	2	7
Grand Total	0	0	0	0	0	4	1	5	0	0	0	0	0	5	0	5	10
Apprch %	0	0	0		0	80	20		0	0	0		0	100	0		
Total %	0	0	0	0	0	40	10	50	0	0	0	0	0	50	0	50	

	"J" Street Southbound				2nd Street Westbound				"J" Street Northbound				2nd Street Eastbound				
Start Time	Left	Thru	Right	App. Total	Left	Thru	Right	App. Total	Left	Thru	Right	App. Total	Left	Thru	Right	App. Total	Int. Total
Peak Hour Analysis From 04:45 PM to 05:30 PM - Peak 1 of 1																	
Peak Hour for Entire Intersection Begins at 04:45 PM																	
04:45 PM	0	0	0	0	0	0	0	0	0	0	0	0	0	**1**	0	**1**	1
05:00 PM	0	0	0	0	0	1	0	1	0	0	0	0	0	0	0	0	1
05:15 PM	0	0	0	0	0	1	**1**	**2**	0	0	0	0	0	0	0	0	2
05:30 PM	0	0	0	0	0	**2**	0	2	0	0	0	0	0	1	0	1	**3**
Total Volume	0	0	0	0	0	4	1	5	0	0	0	0	0	2	0	2	7
% App. Total	0	0	0		0	80	20		0	0	0		0	100	0		
PHF	.000	.000	.000	.000	.000	.500	.250	.625	.000	.000	.000	.000	.000	.500	.000	.500	.583

Counts Unlimited Inc.
25286 Jaclyn Avenue
Moreno Valley, CA 92557
(951) 485-7934

City of San Bernardino
N/S: "J" Street
E/W: 2nd Street
Weather: Sunny

File Name : SBCJ2PM
Site Code : 10089098
Start Date : 4/21/2010
Page No : 2

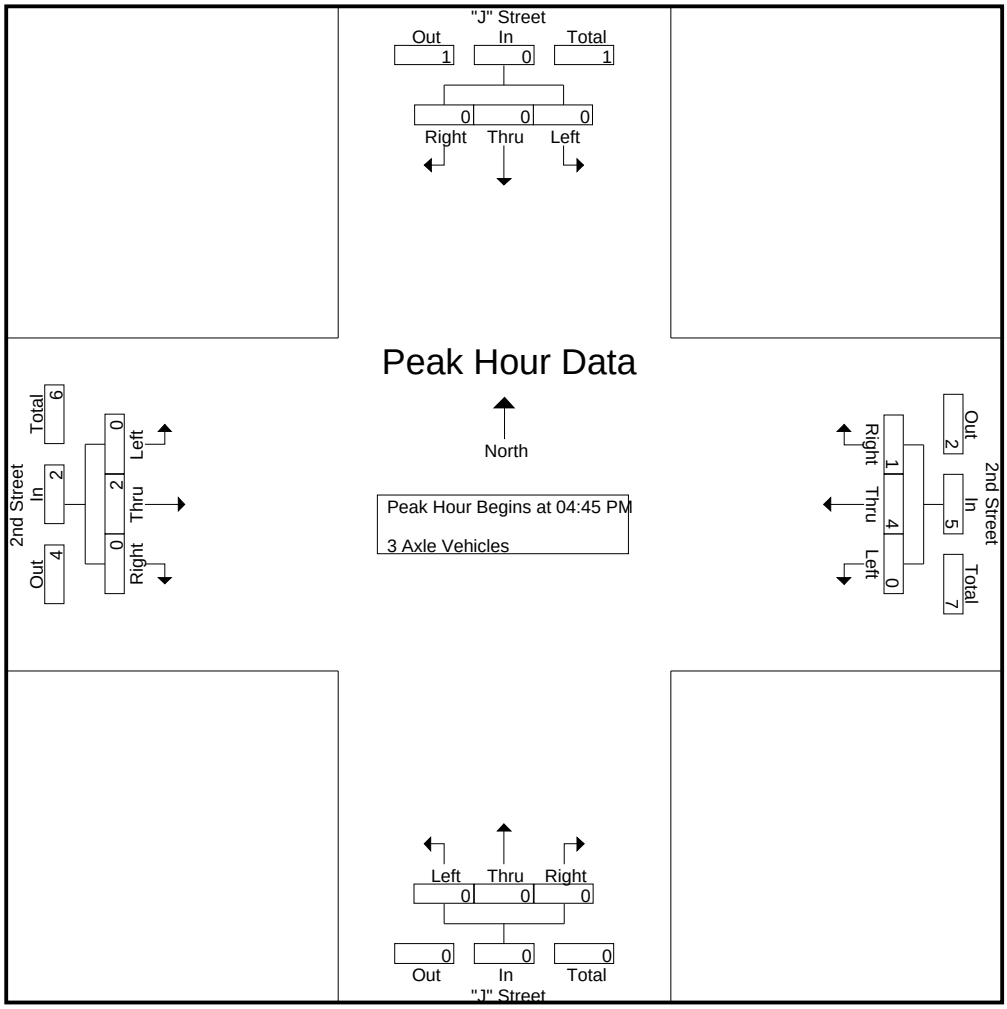

Peak Hour Analysis From 04:45 PM to 05:30 PM - Peak 1 of 1

Peak Hour for Each Approach Begins at:

	04:45 PM				04:45 PM				04:45 PM				04:45 PM			
+0 mins.	0	0	0	0	0	0	0	0	0	0	0	0	0	**1**	0	**1**
+15 mins.	0	0	0	0	0	1	0	1	0	0	0	0	0	0	0	0
+30 mins.	0	0	0	0	0	1	**1**	**2**	0	0	0	0	0	0	0	0
+45 mins.	0	0	0	0	0	**2**	0	2	0	0	0	0	0	1	0	1
Total Volume	0	0	0	0	0	4	1	5	0	0	0	0	0	2	0	2
% App. Total	0	0	0		0	80	20		0	0	0		0	100	0	
PHF	.000	.000	.000	.000	.000	.500	.250	.625	.000	.000	.000	.000	.000	.500	.000	.500

Counts Unlimited Inc.
25286 Jaclyn Avenue
Moreno Valley, CA 92557
(951) 485-7934

City of San Bernardino
N/S: "J" Street
E/W: 2nd Street
Weather: Sunny

File Name : SBCJ2PM
Site Code : 10089098
Start Date : 4/21/2010
Page No : 1

Groups Printed- 4+ Axle Trucks

	"J" Street Southbound				2nd Street Westbound				"J" Street Northbound				2nd Street Eastbound				
Start Time	Left	Thru	Right	App. Total	Left	Thru	Right	App. Total	Left	Thru	Right	App. Total	Left	Thru	Right	App. Total	Int. Total
04:00 PM	0	0	0	0	0	2	0	2	0	0	0	0	0	0	0	0	2
04:15 PM	0	0	0	0	0	2	0	2	0	0	0	0	0	0	0	0	2
04:30 PM	0	0	0	0	0	0	0	0	1	0	0	1	0	2	0	2	3
04:45 PM	0	0	0	0	0	1	0	1	0	0	0	0	0	0	0	0	1
Total	0	0	0	0	0	5	0	5	1	0	0	1	0	2	0	2	8
05:00 PM	0	0	0	0	0	1	0	1	0	0	0	0	0	4	0	4	5
05:15 PM	0	0	0	0	0	2	0	2	0	0	0	0	0	1	0	1	3
05:30 PM	0	0	0	0	0	0	0	0	0	0	0	0	0	4	0	4	4
05:45 PM	0	0	0	0	0	2	1	3	0	0	0	0	0	4	0	4	7
Total	0	0	0	0	0	5	1	6	0	0	0	0	0	13	0	13	19
Grand Total	0	0	0	0	0	10	1	11	1	0	0	1	0	15	0	15	27
Apprch %	0	0	0		0	90.9	9.1		100	0	0		0	100	0		
Total %	0	0	0	0	0	37	3.7	40.7	3.7	0	0	3.7	0	55.6	0	55.6	

	"J" Street Southbound				2nd Street Westbound				"J" Street Northbound				2nd Street Eastbound				
Start Time	Left	Thru	Right	App. Total	Left	Thru	Right	App. Total	Left	Thru	Right	App. Total	Left	Thru	Right	App. Total	Int. Total
Peak Hour Analysis From 04:45 PM to 05:30 PM - Peak 1 of 1																	
Peak Hour for Entire Intersection Begins at 04:45 PM																	
04:45 PM	0	0	0	0	0	1	0	1	0	0	0	0	0	0	0	0	1
05:00 PM	0	0	0	0	0	1	0	1	0	0	0	0	0	**4**	0	**4**	**5**
05:15 PM	0	0	0	0	0	**2**	0	**2**	0	0	0	0	0	1	0	1	3
05:30 PM	0	0	0	0	0	0	0	0	0	0	0	0	0	4	0	4	4
Total Volume	0	0	0	0	0	4	0	4	0	0	0	0	0	9	0	9	13
% App. Total	0	0	0		0	100	0		0	0	0		0	100	0		
PHF	.000	.000	.000	.000	.000	.500	.000	.500	.000	.000	.000	.000	.000	.563	.000	.563	.650

Counts Unlimited Inc.
25286 Jaclyn Avenue
Moreno Valley, CA 92557
(951) 485-7934

City of San Bernardino
N/S: "J" Street
E/W: 2nd Street
Weather: Sunny

File Name : SBCJ2PM
Site Code : 10089098
Start Date : 4/21/2010
Page No : 2

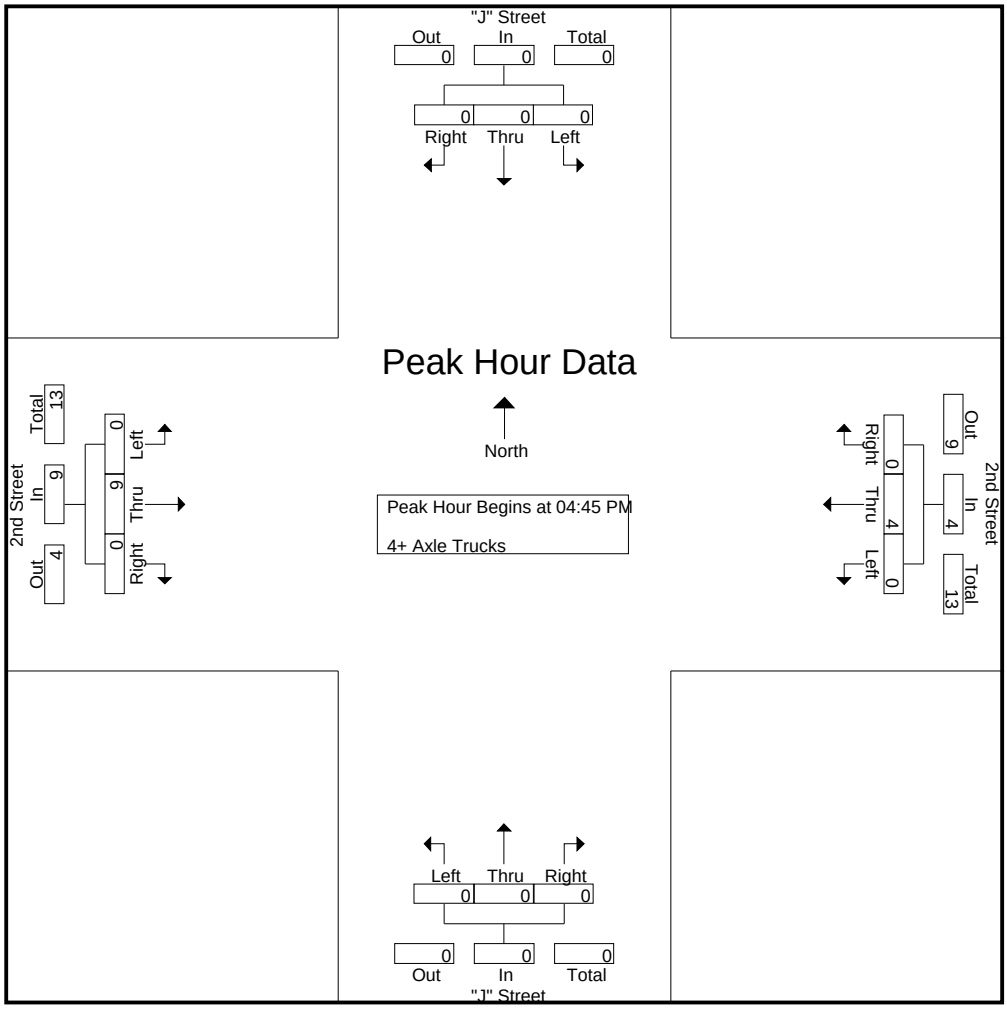

Peak Hour Analysis From 04:45 PM to 05:30 PM - Peak 1 of 1

Peak Hour for Each Approach Begins at:

	04:45 PM				04:45 PM				04:45 PM				04:45 PM			
+0 mins.	0	0	0	0	0	1	0	1	0	0	0	0	0	0	0	0
+15 mins.	0	0	0	0	0	1	0	1	0	0	0	0	0	**4**	0	**4**
+30 mins.	0	0	0	0	0	**2**	0	**2**	0	0	0	0	0	1	0	1
+45 mins.	0	0	0	0	0	0	0	0	0	0	0	0	0	4	0	4
Total Volume	0	0	0	0	0	4	0	4	0	0	0	0	0	9	0	9
% App. Total	0	0	0		0	100	0		0	0	0		0	100	0	
PHF	.000	.000	.000	.000	.000	.500	.000	.500	.000	.000	.000	.000	.000	.563	.000	.563

Counts Unlimited Inc.
25286 Jaclyn Avenue
Moreno Valley, CA 92557
(951) 485-7934

City of San Bernardino
N/S: "J" Street
E/W: Rialto Avenue
Weather: Sunny

File Name : SBCJRIAM
Site Code : 10089022
Start Date : 4/21/2010
Page No : 1

Groups Printed- Passenger Vehicles - Large 2 Axle Vehicles - 3 Axle Vehicles - 4+ Axle Trucks

	"J" Street Southbound				Rialto Avenue Westbound				"J" Street Northbound				Rialto Avenue Eastbound				
Start Time	Left	Thru	Right	App. Total	Left	Thru	Right	App. Total	Left	Thru	Right	App. Total	Left	Thru	Right	App. Total	Int. Total
07:00 AM	1	1	1	3	4	43	2	49	0	0	7	7	4	66	1	71	130
07:15 AM	0	1	2	3	7	53	1	61	0	2	0	2	11	117	0	128	194
07:30 AM	0	0	1	1	3	65	3	71	0	2	1	3	10	117	1	128	203
07:45 AM	2	2	0	4	9	63	1	73	0	2	1	3	11	143	0	154	234
Total	3	4	4	11	23	224	7	254	0	6	9	15	36	443	2	481	761
08:00 AM	2	1	1	4	11	57	2	70	0	0	0	0	14	104	1	119	193
08:15 AM	1	3	1	5	8	62	1	71	0	0	1	1	4	95	2	101	178
08:30 AM	0	7	5	12	6	55	4	65	0	1	0	1	9	123	1	133	211
08:45 AM	0	3	2	5	3	86	1	90	0	3	0	3	5	87	0	92	190
Total	3	14	9	26	28	260	8	296	0	4	1	5	32	409	4	445	772
Grand Total	6	18	13	37	51	484	15	550	0	10	10	20	68	852	6	926	1533
Apprch %	16.2	48.6	35.1		9.3	88	2.7		0	50	50		7.3	92	0.6		
Total %	0.4	1.2	0.8	2.4	3.3	31.6	1	35.9	0	0.7	0.7	1.3	4.4	55.6	0.4	60.4	
Passenger Vehicles	5	18	13	36	50	458	14	522	0	10	8	18	62	808	6	876	1452
% Passenger Vehicles	83.3	100	100	97.3	98	94.6	93.3	94.9	0	100	80	90	91.2	94.8	100	94.6	94.7
Large 2 Axle Vehicles	0	0	0	0	1	18	0	19	0	0	2	2	6	35	0	41	62
% Large 2 Axle Vehicles	0	0	0	0	2	3.7	0	3.5	0	0	20	10	8.8	4.1	0	4.4	4
3 Axle Vehicles	1	0	0	1	0	2	0	2	0	0	0	0	0	4	0	4	7
% 3 Axle Vehicles	16.7	0	0	2.7	0	0.4	0	0.4	0	0	0	0	0	0.5	0	0.4	0.5
4+ Axle Trucks	0	0	0	0	0	6	1	7	0	0	0	0	0	5	0	5	12
% 4+ Axle Trucks	0	0	0	0	0	1.2	6.7	1.3	0	0	0	0	0	0.6	0	0.5	0.8

	"J" Street Southbound				Rialto Avenue Westbound				"J" Street Northbound				Rialto Avenue Eastbound				
Start Time	Left	Thru	Right	App. Total	Left	Thru	Right	App. Total	Left	Thru	Right	App. Total	Left	Thru	Right	App. Total	Int. Total
Peak Hour Analysis From 07:15 AM to 08:00 AM - Peak 1 of 1																	
Peak Hour for Entire Intersection Begins at 07:15 AM																	
07:15 AM	0	1	**2**	3	7	53	1	61	0	**2**	0	2	11	117	0	128	194
07:30 AM	0	0	1	1	3	**65**	**3**	71	0	2	**1**	**3**	10	117	**1**	128	203
07:45 AM	**2**	**2**	0	**4**	9	63	1	**73**	0	2	1	3	11	**143**	0	**154**	**234**
08:00 AM	2	1	1	4	**11**	57	2	70	0	0	0	0	**14**	104	1	119	193
Total Volume	4	4	4	12	30	238	7	275	0	6	2	8	46	481	2	529	824
% App. Total	33.3	33.3	33.3		10.9	86.5	2.5		0	75	25		8.7	90.9	0.4		
PHF	.500	.500	.500	.750	.682	.915	.583	.942	.000	.750	.500	.667	.821	.841	.500	.859	.880

Counts Unlimited Inc.
25286 Jaclyn Avenue
Moreno Valley, CA 92557
(951) 485-7934

City of San Bernardino
N/S: "J" Street
E/W: Rialto Avenue
Weather: Sunny

File Name : SBCJRIAM
Site Code : 10089022
Start Date : 4/21/2010
Page No : 2

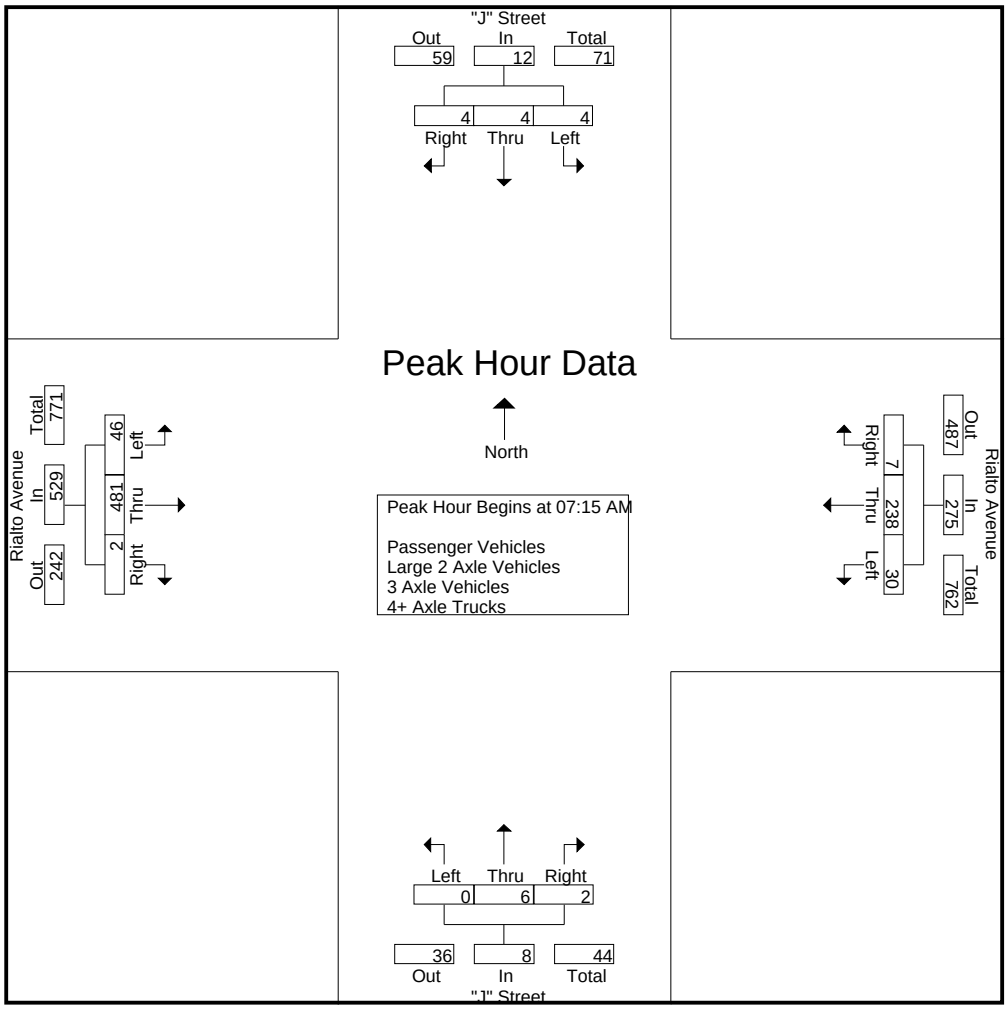

Peak Hour Analysis From 07:15 AM to 08:00 AM - Peak 1 of 1

Peak Hour for Each Approach Begins at:

	07:15 AM				**07:15 AM**				**07:15 AM**				**07:15 AM**			
+0 mins.	**0**	**1**	2	3	7	53	1	61	0	2	0	2	11	117	0	128
+15 mins.	0	0	1	1	3	65	3	71	0	2	**1**	**3**	10	117	**1**	128
+30 mins.	**2**	**2**	0	**4**	9	63	1	**73**	0	2	1	3	11	**143**	0	**154**
+45 mins.	2	1	1	4	**11**	57	2	70	0	0	0	0	**14**	104	1	119
Total Volume	4	4	4	12	30	238	7	275	0	6	2	8	46	481	2	529
% App. Total	33.3	33.3	33.3		10.9	86.5	2.5		0	75	25		8.7	90.9	0.4	
PHF	.500	.500	.500	.750	.682	.915	.583	.942	.000	.750	.500	.667	.821	.841	.500	.859

Counts Unlimited Inc.
25286 Jaclyn Avenue
Moreno Valley, CA 92557
(951) 485-7934

City of San Bernardino
N/S: "J" Street
E/W: Rialto Avenue
Weather: Sunny

File Name : SBCJRIAM
Site Code : 10089022
Start Date : 4/21/2010
Page No : 1

Groups Printed- Passenger Vehicles

	"J" Street Southbound				Rialto Avenue Westbound				"J" Street Northbound				Rialto Avenue Eastbound				
Start Time	Left	Thru	Right	App. Total	Left	Thru	Right	App. Total	Left	Thru	Right	App. Total	Left	Thru	Right	App. Total	Int. Total
07:00 AM	1	1	1	3	4	37	2	43	0	0	5	5	4	61	1	66	117
07:15 AM	0	1	2	3	7	50	1	58	0	2	0	2	8	105	0	113	176
07:30 AM	0	0	1	1	3	64	2	69	0	2	1	3	8	110	1	119	192
07:45 AM	2	2	0	4	9	58	1	68	0	2	1	3	11	138	0	149	224
Total	3	4	4	11	23	209	6	238	0	6	7	13	31	414	2	447	709
08:00 AM	2	1	1	4	10	56	2	68	0	0	0	0	14	103	1	118	190
08:15 AM	0	3	1	4	8	59	1	68	0	0	1	1	3	92	2	97	170
08:30 AM	0	7	5	12	6	53	4	63	0	1	0	1	9	115	1	125	201
08:45 AM	0	3	2	5	3	81	1	85	0	3	0	3	5	84	0	89	182
Total	2	14	9	25	27	249	8	284	0	4	1	5	31	394	4	429	743
Grand Total	5	18	13	36	50	458	14	522	0	10	8	18	62	808	6	876	1452
Apprch %	13.9	50	36.1		9.6	87.7	2.7		0	55.6	44.4		7.1	92.2	0.7		
Total %	0.3	1.2	0.9	2.5	3.4	31.5	1	36	0	0.7	0.6	1.2	4.3	55.6	0.4	60.3	

	"J" Street Southbound				Rialto Avenue Westbound				"J" Street Northbound				Rialto Avenue Eastbound				
Start Time	Left	Thru	Right	App. Total	Left	Thru	Right	App. Total	Left	Thru	Right	App. Total	Left	Thru	Right	App. Total	Int. Total
Peak Hour Analysis From 07:15 AM to 08:00 AM - Peak 1 of 1																	
Peak Hour for Entire Intersection Begins at 07:15 AM																	
07:15 AM	0	1	**2**	3	7	50	1	58	0	**2**	0	2	8	105	0	113	176
07:30 AM	0	0	1	1	3	**64**	**2**	**69**	0	2	**1**	**3**	8	110	**1**	119	192
07:45 AM	**2**	**2**	0	**4**	9	58	1	68	0	2	1	3	11	**138**	0	**149**	**224**
08:00 AM	2	1	1	4	**10**	56	2	68	0	0	0	0	**14**	103	1	118	190
Total Volume	4	4	4	12	29	228	6	263	0	6	2	8	41	456	2	499	782
% App. Total	33.3	33.3	33.3		11	86.7	2.3		0	75	25		8.2	91.4	0.4		
PHF	.500	.500	.500	.750	.725	.891	.750	.953	.000	.750	.500	.667	.732	.826	.500	.837	.873

Counts Unlimited Inc.
25286 Jaclyn Avenue
Moreno Valley, CA 92557
(951) 485-7934

City of San Bernardino
N/S: "J" Street
E/W: Rialto Avenue
Weather: Sunny

File Name : SBCJRIAM
Site Code : 10089022
Start Date : 4/21/2010
Page No : 2

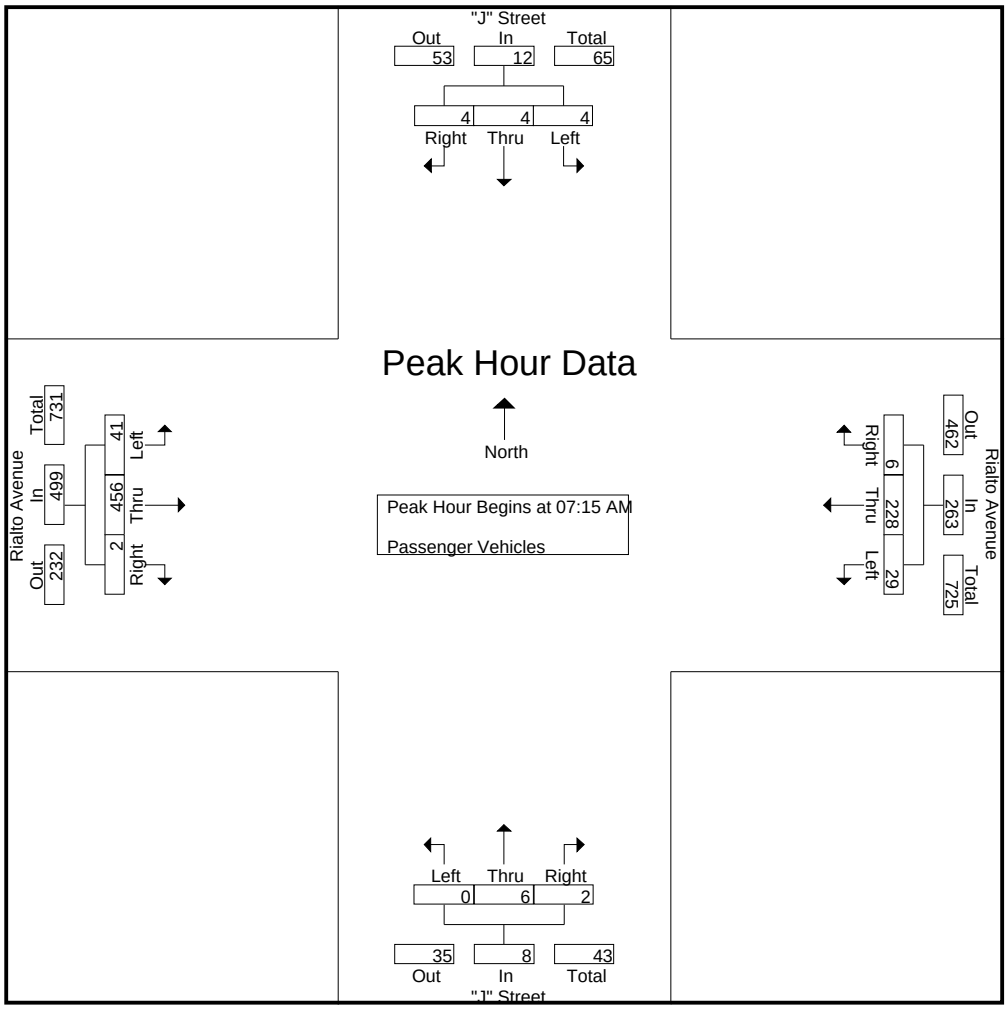

Peak Hour Analysis From 07:15 AM to 08:00 AM - Peak 1 of 1

Peak Hour for Each Approach Begins at:

	07:15 AM				07:15 AM				07:15 AM				07:15 AM			
+0 mins.	**0**	**1**	2	3	7	50	1	58	0	2	0	2	8	105	0	113
+15 mins.	0	0	1	1	3	64	2	**69**	0	2	**1**	**3**	8	110	**1**	119
+30 mins.	**2**	**2**	0	**4**	9	58	1	68	0	2	1	3	11	**138**	0	**149**
+45 mins.	2	1	1	4	**10**	56	2	68	0	0	0	0	**14**	103	1	118
Total Volume	4	4	4	12	29	228	6	263	0	6	2	8	41	456	2	499
% App. Total	33.3	33.3	33.3		11	86.7	2.3		0	75	25		8.2	91.4	0.4	
PHF	.500	.500	.500	.750	.725	.891	.750	.953	.000	.750	.500	.667	.732	.826	.500	.837

Counts Unlimited Inc.
25286 Jaclyn Avenue
Moreno Valley, CA 92557
(951) 485-7934

City of San Bernardino
N/S: "J" Street
E/W: Rialto Avenue
Weather: Sunny

File Name : SBCJRIAM
Site Code : 10089022
Start Date : 4/21/2010
Page No : 1

Groups Printed- Large 2 Axle Vehicles

	"J" Street Southbound				Rialto Avenue Westbound				"J" Street Northbound				Rialto Avenue Eastbound				
Start Time	Left	Thru	Right	App. Total	Left	Thru	Right	App. Total	Left	Thru	Right	App. Total	Left	Thru	Right	App. Total	Int. Total
07:00 AM	0	0	0	0	0	5	0	5	0	0	2	2	0	4	0	4	11
07:15 AM	0	0	0	0	0	3	0	3	0	0	0	0	3	11	0	14	17
07:30 AM	0	0	0	0	0	1	0	1	0	0	0	0	2	6	0	8	9
07:45 AM	0	0	0	0	0	2	0	2	0	0	0	0	0	3	0	3	5
Total	0	0	0	0	0	11	0	11	0	0	2	2	5	24	0	29	42
08:00 AM	0	0	0	0	1	1	0	2	0	0	0	0	0	1	0	1	3
08:15 AM	0	0	0	0	0	2	0	2	0	0	0	0	1	2	0	3	5
08:30 AM	0	0	0	0	0	1	0	1	0	0	0	0	0	5	0	5	6
08:45 AM	0	0	0	0	0	3	0	3	0	0	0	0	0	3	0	3	6
Total	0	0	0	0	1	7	0	8	0	0	0	0	1	11	0	12	20
Grand Total	0	0	0	0	1	18	0	19	0	0	2	2	6	35	0	41	62
Apprch %	0	0	0		5.3	94.7	0		0	0	100		14.6	85.4	0		
Total %	0	0	0	0	1.6	29	0	30.6	0	0	3.2	3.2	9.7	56.5	0	66.1	

	"J" Street Southbound				Rialto Avenue Westbound				"J" Street Northbound				Rialto Avenue Eastbound				
Start Time	Left	Thru	Right	App. Total	Left	Thru	Right	App. Total	Left	Thru	Right	App. Total	Left	Thru	Right	App. Total	Int. Total
Peak Hour Analysis From 07:15 AM to 08:00 AM - Peak 1 of 1																	
Peak Hour for Entire Intersection Begins at 07:15 AM																	
07:15 AM	0	0	0	0	0	**3**	0	**3**	0	0	0	0	**3**	**11**	0	**14**	**17**
07:30 AM	0	0	0	0	0	1	0	1	0	0	0	0	2	6	0	8	9
07:45 AM	0	0	0	0	0	2	0	2	0	0	0	0	0	3	0	3	5
08:00 AM	0	0	0	0	**1**	1	0	2	0	0	0	0	0	1	0	1	3
Total Volume	0	0	0	0	1	7	0	8	0	0	0	0	5	21	0	26	34
% App. Total	0	0	0		12.5	87.5	0		0	0	0		19.2	80.8	0		
PHF	.000	.000	.000	.000	.250	.583	.000	.667	.000	.000	.000	.000	.417	.477	.000	.464	.500

Counts Unlimited Inc.
25286 Jaclyn Avenue
Moreno Valley, CA 92557
(951) 485-7934

City of San Bernardino
N/S: "J" Street
E/W: Rialto Avenue
Weather: Sunny

File Name : SBCJRIAM
Site Code : 10089022
Start Date : 4/21/2010
Page No : 2

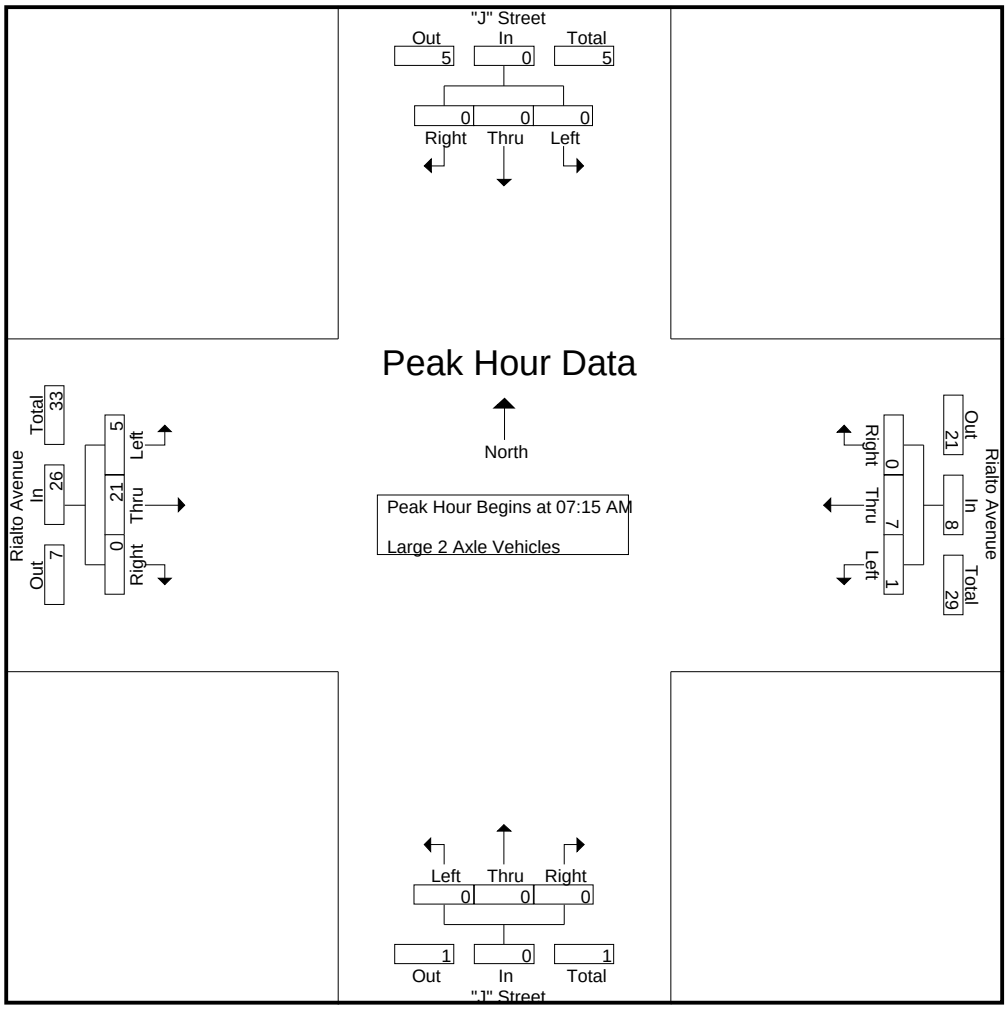

Peak Hour Analysis From 07:15 AM to 08:00 AM - Peak 1 of 1

Peak Hour for Each Approach Begins at:

	07:15 AM				**07:15 AM**				**07:15 AM**				**07:15 AM**			
+0 mins.	**0**	**0**	**0**	**0**	**0**	3	0	3	0	0	0	0	3	11	0	**14**
+15 mins.	0	0	0	0	0	1	0	1	0	0	0	0	2	6	0	8
+30 mins.	0	0	0	0	0	2	0	2	0	0	0	0	0	3	0	3
+45 mins.	0	0	0	0	**1**	1	0	2	0	0	0	0	0	1	0	1
Total Volume	0	0	0	0	1	7	0	8	0	0	0	0	5	21	0	26
% App. Total	0	0	0		12.5	87.5	0		0	0	0		19.2	80.8	0	
PHF	.000	.000	.000	.000	.250	.583	.000	.667	.000	.000	.000	.000	.417	.477	.000	.464

Counts Unlimited Inc.
25286 Jaclyn Avenue
Moreno Valley, CA 92557
(951) 485-7934

City of San Bernardino
N/S: "J" Street
E/W: Rialto Avenue
Weather: Sunny

File Name : SBCJRIAM
Site Code : 10089022
Start Date : 4/21/2010
Page No : 1

Groups Printed- 3 Axle Vehicles

	"J" Street Southbound				Rialto Avenue Westbound				"J" Street Northbound				Rialto Avenue Eastbound				
Start Time	Left	Thru	Right	App. Total	Left	Thru	Right	App. Total	Left	Thru	Right	App. Total	Left	Thru	Right	App. Total	Int. Total
07:00 AM	0	0	0	0	0	0	0	0	0	0	0	0	0	0	0	0	0
07:15 AM	0	0	0	0	0	0	0	0	0	0	0	0	0	0	0	0	0
07:30 AM	0	0	0	0	0	0	0	0	0	0	0	0	0	1	0	1	1
07:45 AM	0	0	0	0	0	1	0	1	0	0	0	0	0	1	0	1	2
Total	0	0	0	0	0	1	0	1	0	0	0	0	0	2	0	2	3
08:00 AM	0	0	0	0	0	0	0	0	0	0	0	0	0	0	0	0	0
08:15 AM	1	0	0	1	0	0	0	0	0	0	0	0	0	1	0	1	2
08:30 AM	0	0	0	0	0	1	0	1	0	0	0	0	0	1	0	1	2
08:45 AM	0	0	0	0	0	0	0	0	0	0	0	0	0	0	0	0	0
Total	1	0	0	1	0	1	0	1	0	0	0	0	0	2	0	2	4
Grand Total	1	0	0	1	0	2	0	2	0	0	0	0	0	4	0	4	7
Apprch %	100	0	0		0	100	0		0	0	0		0	100	0		
Total %	14.3	0	0	14.3	0	28.6	0	28.6	0	0	0	0	0	57.1	0	57.1	

	"J" Street Southbound				Rialto Avenue Westbound				"J" Street Northbound				Rialto Avenue Eastbound				
Start Time	Left	Thru	Right	App. Total	Left	Thru	Right	App. Total	Left	Thru	Right	App. Total	Left	Thru	Right	App. Total	Int. Total
Peak Hour Analysis From 07:15 AM to 08:00 AM - Peak 1 of 1																	
Peak Hour for Entire Intersection Begins at 07:15 AM																	
07:15 AM	0	0	0	0	0	0	0	0	0	0	0	0	0	0	0	0	0
07:30 AM	0	0	0	0	0	0	0	0	0	0	0	0	0	**1**	0	**1**	1
07:45 AM	0	0	0	0	0	**1**	0	**1**	0	0	0	0	0	1	0	1	**2**
08:00 AM	0	0	0	0	0	0	0	0	0	0	0	0	0	0	0	0	0
Total Volume	0	0	0	0	0	1	0	1	0	0	0	0	0	2	0	2	3
% App. Total	0	0	0		0	100	0		0	0	0		0	100	0		
PHF	.000	.000	.000	.000	.000	.250	.000	.250	.000	.000	.000	.000	.000	.500	.000	.500	.375

Counts Unlimited Inc.
25286 Jaclyn Avenue
Moreno Valley, CA 92557
(951) 485-7934

City of San Bernardino
N/S: "J" Street
E/W: Rialto Avenue
Weather: Sunny

File Name : SBCJRIAM
Site Code : 10089022
Start Date : 4/21/2010
Page No : 2

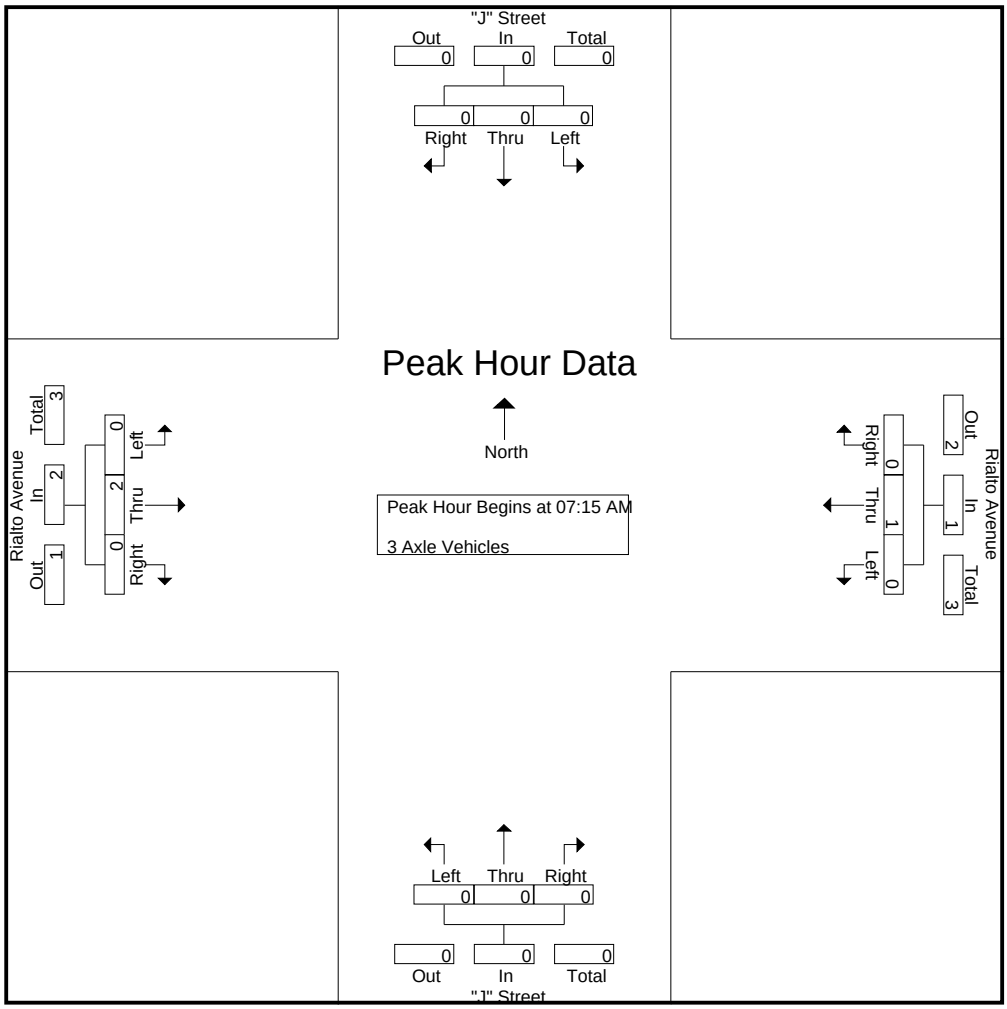

Peak Hour Analysis From 07:15 AM to 08:00 AM - Peak 1 of 1
Peak Hour for Each Approach Begins at:

	07:15 AM				07:15 AM				07:15 AM				07:15 AM			
+0 mins.	0	0	0	0	0	0	0	0	0	0	0	0	0	0	0	0
+15 mins.	0	0	0	0	0	0	0	0	0	0	0	0	0	**1**	0	**1**
+30 mins.	0	0	0	0	0	**1**	0	**1**	0	0	0	0	0	1	0	1
+45 mins.	0	0	0	0	0	0	0	0	0	0	0	0	0	0	0	0
Total Volume	0	0	0	0	0	1	0	1	0	0	0	0	0	2	0	2
% App. Total	0	0	0		0	100	0		0	0	0		0	100	0	
PHF	.000	.000	.000	.000	.000	.250	.000	.250	.000	.000	.000	.000	.000	.500	.000	.500

Counts Unlimited Inc.
25286 Jaclyn Avenue
Moreno Valley, CA 92557
(951) 485-7934

City of San Bernardino
N/S: "J" Street
E/W: Rialto Avenue
Weather: Sunny

File Name : SBCJRIAM
Site Code : 10089022
Start Date : 4/21/2010
Page No : 1

Groups Printed- 4+ Axle Trucks

	"J" Street Southbound				Rialto Avenue Westbound				"J" Street Northbound				Rialto Avenue Eastbound				
Start Time	Left	Thru	Right	App. Total	Left	Thru	Right	App. Total	Left	Thru	Right	App. Total	Left	Thru	Right	App. Total	Int. Total
07:00 AM	0	0	0	0	0	1	0	1	0	0	0	0	0	1	0	1	2
07:15 AM	0	0	0	0	0	0	0	0	0	0	0	0	0	1	0	1	1
07:30 AM	0	0	0	0	0	0	1	1	0	0	0	0	0	0	0	0	1
07:45 AM	0	0	0	0	0	2	0	2	0	0	0	0	0	1	0	1	3
Total	0	0	0	0	0	3	1	4	0	0	0	0	0	3	0	3	7
08:00 AM	0	0	0	0	0	0	0	0	0	0	0	0	0	0	0	0	0
08:15 AM	0	0	0	0	0	1	0	1	0	0	0	0	0	0	0	0	1
08:30 AM	0	0	0	0	0	0	0	0	0	0	0	0	0	2	0	2	2
08:45 AM	0	0	0	0	0	2	0	2	0	0	0	0	0	0	0	0	2
Total	0	0	0	0	0	3	0	3	0	0	0	0	0	2	0	2	5
Grand Total	0	0	0	0	0	6	1	7	0	0	0	0	0	5	0	5	12
Apprch %	0	0	0		0	85.7	14.3		0	0	0		0	100	0		
Total %	0	0	0	0	0	50	8.3	58.3	0	0	0	0	0	41.7	0	41.7	

	"J" Street Southbound				Rialto Avenue Westbound				"J" Street Northbound				Rialto Avenue Eastbound				
Start Time	Left	Thru	Right	App. Total	Left	Thru	Right	App. Total	Left	Thru	Right	App. Total	Left	Thru	Right	App. Total	Int. Total
Peak Hour Analysis From 07:15 AM to 08:00 AM - Peak 1 of 1																	
Peak Hour for Entire Intersection Begins at 07:15 AM																	
07:15 AM	0	0	0	0	0	0	0	0	0	0	0	0	0	**1**	0	**1**	1
07:30 AM	0	0	0	0	0	0	**1**	1	0	0	0	0	0	0	0	0	1
07:45 AM	0	0	0	0	0	**2**	0	**2**	0	0	0	0	0	1	0	1	**3**
08:00 AM	0	0	0	0	0	0	0	0	0	0	0	0	0	0	0	0	0
Total Volume	0	0	0	0	0	2	1	3	0	0	0	0	0	2	0	2	5
% App. Total	0	0	0		0	66.7	33.3		0	0	0		0	100	0		
PHF	.000	.000	.000	.000	.000	.250	.250	.375	.000	.000	.000	.000	.000	.500	.000	.500	.417

Counts Unlimited Inc.
25286 Jaclyn Avenue
Moreno Valley, CA 92557
(951) 485-7934

City of San Bernardino
N/S: "J" Street
E/W: Rialto Avenue
Weather: Sunny

File Name : SBCJRIAM
Site Code : 10089022
Start Date : 4/21/2010

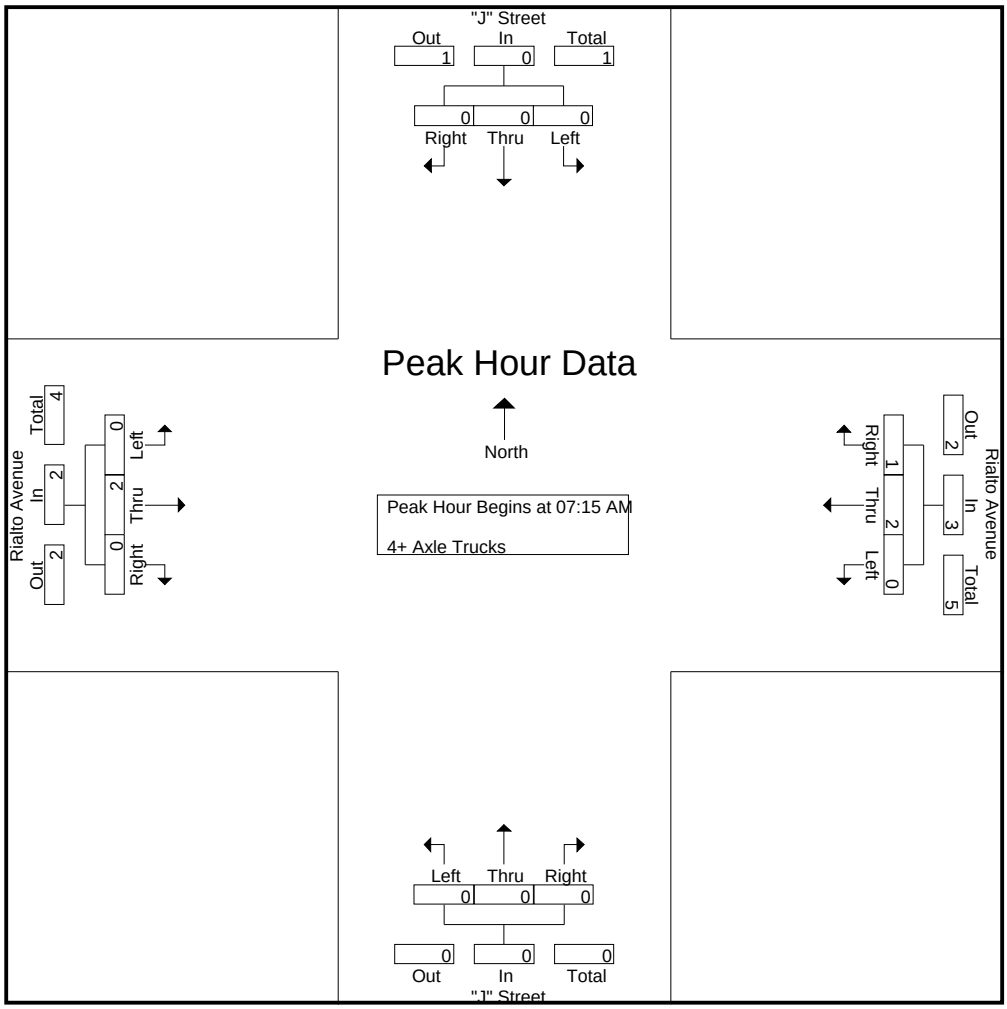

Peak Hour Analysis From 07:15 AM to 08:00 AM - Peak 1 of 1

Peak Hour for Each Approach Begins at:

	07:15 AM				07:15 AM				07:15 AM				07:15 AM			
+0 mins.	0	0	0	0	0	0	0	0	0	0	0	0	0	**1**	0	**1**
+15 mins.	0	0	0	0	0	0	**1**	1	0	0	0	0	0	0	0	0
+30 mins.	0	0	0	0	0	**2**	0	**2**	0	0	0	0	0	1	0	1
+45 mins.	0	0	0	0	0	0	0	0	0	0	0	0	0	0	0	0
Total Volume	0	0	0	0	0	2	1	3	0	0	0	0	0	2	0	2
% App. Total	0	0	0		0	66.7	33.3		0	0	0		0	100	0	
PHF	.000	.000	.000	.000	.000	.250	.250	.375	.000	.000	.000	.000	.000	.500	.000	.500

Counts Unlimited Inc.
25286 Jaclyn Avenue
Moreno Valley, CA 92557
(951) 485-7934

City of San Bernardino
N/S: "J" Stret
E/W: Rialto Avenue
Weather: Sunny

File Name : SBCJRIPM
Site Code : 10089022
Start Date : 4/21/2010
Page No : 1

Groups Printed- Passenger Vehicles - Large 2 Axle Vehicles - 3 Axle Vehicles - 4+ Axle Trucks

	"J" Street Southbound				Rialto Avenue Westbound				"J" Street Northbound				Rialto Avenue Eastbound				
Start Time	Left	Thru	Right	App. Total	Left	Thru	Right	App. Total	Left	Thru	Right	App. Total	Left	Thru	Right	App. Total	Int. Total
04:00 PM	0	3	1	4	12	114	4	130	0	0	1	1	14	103	4	121	256
04:15 PM	1	3	1	5	10	97	1	108	0	2	2	4	7	95	1	103	220
04:30 PM	1	1	3	5	16	129	2	147	2	3	3	8	9	108	2	119	279
04:45 PM	3	1	3	7	3	117	0	120	0	4	4	8	8	103	1	112	247
Total	5	8	8	21	41	457	7	505	2	9	10	21	38	409	8	455	1002
05:00 PM	0	2	2	4	7	165	4	176	1	2	2	5	6	89	0	95	280
05:15 PM	2	6	1	9	12	132	3	147	2	1	2	5	5	113	1	119	280
05:30 PM	2	3	2	7	9	109	3	121	0	0	3	3	3	91	3	97	228
05:45 PM	1	2	0	3	6	101	0	107	1	1	3	5	7	99	0	106	221
Total	5	13	5	23	34	507	10	551	4	4	10	18	21	392	4	417	1009
Grand Total	10	21	13	44	75	964	17	1056	6	13	20	39	59	801	12	872	2011
Apprch %	22.7	47.7	29.5		7.1	91.3	1.6		15.4	33.3	51.3		6.8	91.9	1.4		
Total %	0.5	1	0.6	2.2	3.7	47.9	0.8	52.5	0.3	0.6	1	1.9	2.9	39.8	0.6	43.4	
Passenger Vehicles	10	21	13	44	74	951	16	1041	6	13	20	39	59	779	12	850	1974
% Passenger Vehicles	100	100	100	100	98.7	98.7	94.1	98.6	100	100	100	100	100	97.3	100	97.5	98.2
Large 2 Axle Vehicles	0	0	0	0	1	11	0	12	0	0	0	0	0	17	0	17	29
% Large 2 Axle Vehicles	0	0	0	0	1.3	1.1	0	1.1	0	0	0	0	0	2.1	0	1.9	1.4
3 Axle Vehicles	0	0	0	0	0	0	0	0	0	0	0	0	0	0	0	0	0
% 3 Axle Vehicles	0	0	0	0	0	0	0	0	0	0	0	0	0	0	0	0	0
4+ Axle Trucks	0	0	0	0	0	2	1	3	0	0	0	0	0	5	0	5	8
% 4+ Axle Trucks	0	0	0	0	0	0.2	5.9	0.3	0	0	0	0	0	0.6	0	0.6	0.4

	"J" Street Southbound				Rialto Avenue Westbound				"J" Street Northbound				Rialto Avenue Eastbound				
Start Time	Left	Thru	Right	App. Total	Left	Thru	Right	App. Total	Left	Thru	Right	App. Total	Left	Thru	Right	App. Total	Int. Total
Peak Hour Analysis From 04:00 PM to 05:45 PM - Peak 1 of 1																	
Peak Hour for Entire Intersection Begins at 04:30 PM																	
04:30 PM	1	1	**3**	5	**16**	129	2	147	**2**	3	3	**8**	**9**	108	**2**	**119**	279
04:45 PM	**3**	1	3	7	3	117	0	120	0	**4**	**4**	8	8	103	1	112	247
05:00 PM	0	2	2	4	7	**165**	**4**	**176**	1	2	2	5	6	89	0	95	**280**
05:15 PM	2	**6**	1	**9**	12	132	3	147	2	1	2	5	5	**113**	1	119	280
Total Volume	6	10	9	25	38	543	9	590	5	10	11	26	28	413	4	445	1086
% App. Total	24	40	36		6.4	92	1.5		19.2	38.5	42.3		6.3	92.8	0.9		
PHF	.500	.417	.750	.694	.594	.823	.563	.838	.625	.625	.688	.813	.778	.914	.500	.935	.970

Counts Unlimited Inc.
25286 Jaclyn Avenue
Moreno Valley, CA 92557
(951) 485-7934

City of San Bernardino
N/S: "J" Stret
E/W: Rialto Avenue
Weather: Sunny

File Name : SBCJRIPM
Site Code : 10089022
Start Date : 4/21/2010
Page No : 2

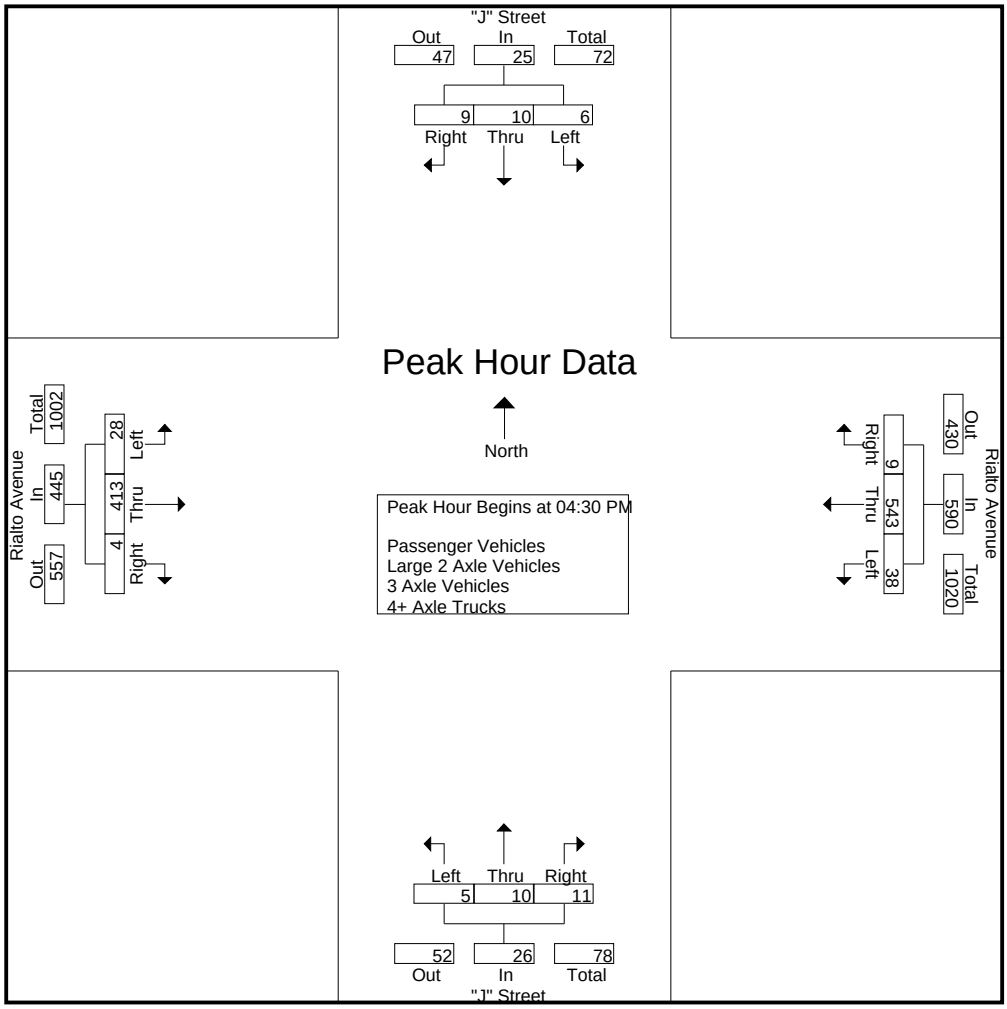

Peak Hour Analysis From 04:00 PM to 05:45 PM - Peak 1 of 1

Peak Hour for Each Approach Begins at:

	04:45 PM				04:30 PM				04:30 PM				04:00 PM			
+0 mins.	**3**	1	**3**	7	**16**	129	2	147	**2**	3	3	**8**	**14**	103	**4**	**121**
+15 mins.	0	2	2	4	3	117	0	120	0	**4**	**4**	8	7	95	1	103
+30 mins.	2	**6**	1	**9**	7	**165**	**4**	**176**	1	2	2	5	9	**108**	2	119
+45 mins.	2	3	2	7	12	132	3	147	2	1	2	5	8	103	1	112
Total Volume	7	12	8	27	38	543	9	590	5	10	11	26	38	409	8	455
% App. Total	25.9	44.4	29.6		6.4	92	1.5		19.2	38.5	42.3		8.4	89.9	1.8	
PHF	.583	.500	.667	.750	.594	.823	.563	.838	.625	.625	.688	.813	.679	.947	.500	.940

Counts Unlimited Inc.
25286 Jaclyn Avenue
Moreno Valley, CA 92557
(951) 485-7934

City of San Bernardino
N/S: "J" Stret
E/W: Rialto Avenue
Weather: Sunny

File Name : SBCJRIPM
Site Code : 10089022
Start Date : 4/21/2010
Page No : 1

Groups Printed- Passenger Vehicles

	"J" Street Southbound				Rialto Avenue Westbound				"J" Street Northbound				Rialto Avenue Eastbound				
Start Time	Left	Thru	Right	App. Total	Left	Thru	Right	App. Total	Left	Thru	Right	App. Total	Left	Thru	Right	App. Total	Int. Total
04:00 PM	0	3	1	4	12	111	4	127	0	0	1	1	14	100	4	118	250
04:15 PM	1	3	1	5	10	97	1	108	0	2	2	4	7	94	1	102	219
04:30 PM	1	1	3	5	15	127	2	144	2	3	3	8	9	102	2	113	270
04:45 PM	3	1	3	7	3	115	0	118	0	4	4	8	8	101	1	110	243
Total	5	8	8	21	40	450	7	497	2	9	10	21	38	397	8	443	982
05:00 PM	0	2	2	4	7	164	4	175	1	2	2	5	6	84	0	90	274
05:15 PM	2	6	1	9	12	131	2	145	2	1	2	5	5	111	1	117	276
05:30 PM	2	3	2	7	9	105	3	117	0	0	3	3	3	89	3	95	222
05:45 PM	1	2	0	3	6	101	0	107	1	1	3	5	7	98	0	105	220
Total	5	13	5	23	34	501	9	544	4	4	10	18	21	382	4	407	992
Grand Total	10	21	13	44	74	951	16	1041	6	13	20	39	59	779	12	850	1974
Apprch %	22.7	47.7	29.5		7.1	91.4	1.5		15.4	33.3	51.3		6.9	91.6	1.4		
Total %	0.5	1.1	0.7	2.2	3.7	48.2	0.8	52.7	0.3	0.7	1	2	3	39.5	0.6	43.1	

	"J" Street Southbound				Rialto Avenue Westbound				"J" Street Northbound				Rialto Avenue Eastbound				
Start Time	Left	Thru	Right	App. Total	Left	Thru	Right	App. Total	Left	Thru	Right	App. Total	Left	Thru	Right	App. Total	Int. Total
Peak Hour Analysis From 04:30 PM to 05:15 PM - Peak 1 of 1																	
Peak Hour for Entire Intersection Begins at 04:30 PM																	
04:30 PM	1	1	**3**	5	**15**	127	2	144	**2**	3	3	**8**	**9**	102	**2**	113	270
04:45 PM	**3**	1	3	7	3	115	0	118	0	**4**	**4**	8	8	101	1	110	243
05:00 PM	0	2	2	4	7	**164**	**4**	**175**	1	2	2	5	6	84	0	90	274
05:15 PM	2	**6**	1	**9**	12	131	2	145	2	1	2	5	5	**111**	1	**117**	**276**
Total Volume	6	10	9	25	37	537	8	582	5	10	11	26	28	398	4	430	1063
% App. Total	24	40	36		6.4	92.3	1.4		19.2	38.5	42.3		6.5	92.6	0.9		
PHF	.500	.417	.750	.694	.617	.819	.500	.831	.625	.625	.688	.813	.778	.896	.500	.919	.963

Counts Unlimited Inc.
25286 Jaclyn Avenue
Moreno Valley, CA 92557
(951) 485-7934

City of San Bernardino
N/S: "J" Stret
E/W: Rialto Avenue
Weather: Sunny

File Name : SBCJRIPM
Site Code : 10089022
Start Date : 4/21/2010
Page No : 2

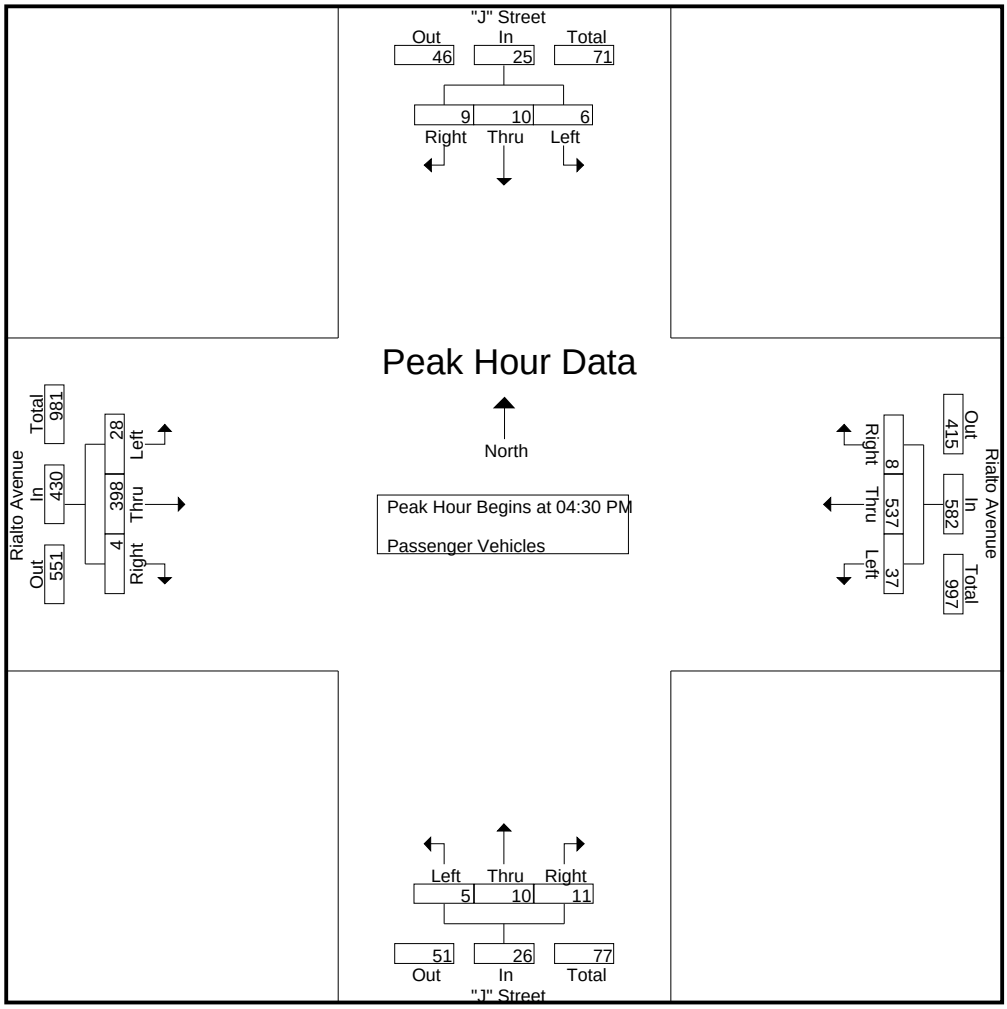

Peak Hour Analysis From 04:30 PM to 05:15 PM - Peak 1 of 1

Peak Hour for Each Approach Begins at:

	04:30 PM				04:30 PM				04:30 PM				04:30 PM			
+0 mins.	1	1	**3**	5	**15**	127	2	144	**2**	3	3	**8**	**9**	102	**2**	113
+15 mins.	**3**	1	3	7	3	115	0	118	0	**4**	**4**	8	8	101	1	110
+30 mins.	0	2	2	4	7	**164**	**4**	**175**	1	2	2	5	6	84	0	90
+45 mins.	2	**6**	1	**9**	12	131	2	145	2	1	2	5	5	**111**	1	**117**
Total Volume	6	10	9	25	37	537	8	582	5	10	11	26	28	398	4	430
% App. Total	24	40	36		6.4	92.3	1.4		19.2	38.5	42.3		6.5	92.6	0.9	
PHF	.500	.417	.750	.694	.617	.819	.500	.831	.625	.625	.688	.813	.778	.896	.500	.919

Counts Unlimited Inc.
25286 Jaclyn Avenue
Moreno Valley, CA 92557
(951) 485-7934

City of San Bernardino
N/S: "J" Stret
E/W: Rialto Avenue
Weather: Sunny

File Name : SBCJRIPM
Site Code : 10089022
Start Date : 4/21/2010
Page No : 1

Groups Printed- Large 2 Axle Vehicles

	"J" Street Southbound				Rialto Avenue Westbound				"J" Street Northbound				Rialto Avenue Eastbound				
Start Time	Left	Thru	Right	App. Total	Left	Thru	Right	App. Total	Left	Thru	Right	App. Total	Left	Thru	Right	App. Total	Int. Total
04:00 PM	0	0	0	0	0	3	0	3	0	0	0	0	0	2	0	2	5
04:15 PM	0	0	0	0	0	0	0	0	0	0	0	0	0	1	0	1	1
04:30 PM	0	0	0	0	1	2	0	3	0	0	0	0	0	3	0	3	6
04:45 PM	0	0	0	0	0	2	0	2	0	0	0	0	0	2	0	2	4
Total	0	0	0	0	1	7	0	8	0	0	0	0	0	8	0	8	16
05:00 PM	0	0	0	0	0	1	0	1	0	0	0	0	0	4	0	4	5
05:15 PM	0	0	0	0	0	1	0	1	0	0	0	0	0	2	0	2	3
05:30 PM	0	0	0	0	0	2	0	2	0	0	0	0	0	2	0	2	4
05:45 PM	0	0	0	0	0	0	0	0	0	0	0	0	0	1	0	1	1
Total	0	0	0	0	0	4	0	4	0	0	0	0	0	9	0	9	13
Grand Total	0	0	0	0	1	11	0	12	0	0	0	0	0	17	0	17	29
Apprch %	0	0	0		8.3	91.7	0		0	0	0		0	100	0		
Total %	0	0	0	0	3.4	37.9	0	41.4	0	0	0	0	0	58.6	0	58.6	

	"J" Street Southbound				Rialto Avenue Westbound				"J" Street Northbound				Rialto Avenue Eastbound				
Start Time	Left	Thru	Right	App. Total	Left	Thru	Right	App. Total	Left	Thru	Right	App. Total	Left	Thru	Right	App. Total	Int. Total
Peak Hour Analysis From 04:30 PM to 05:15 PM - Peak 1 of 1																	
Peak Hour for Entire Intersection Begins at 04:30 PM																	
04:30 PM	0	0	0	0	**1**	**2**	0	**3**	0	0	0	0	0	3	0	3	**6**
04:45 PM	0	0	0	0	0	2	0	2	0	0	0	0	0	2	0	2	4
05:00 PM	0	0	0	0	0	1	0	1	0	0	0	0	0	**4**	0	**4**	5
05:15 PM	0	0	0	0	0	1	0	1	0	0	0	0	0	2	0	2	3
Total Volume	0	0	0	0	1	6	0	7	0	0	0	0	0	11	0	11	18
% App. Total	0	0	0		14.3	85.7	0		0	0	0		0	100	0		
PHF	.000	.000	.000	.000	.250	.750	.000	.583	.000	.000	.000	.000	.000	.688	.000	.688	.750

Counts Unlimited Inc.
25286 Jaclyn Avenue
Moreno Valley, CA 92557
(951) 485-7934

City of San Bernardino
N/S: "J" Stret
E/W: Rialto Avenue
Weather: Sunny

File Name : SBCJRIPM
Site Code : 10089022
Start Date : 4/21/2010
Page No : 2

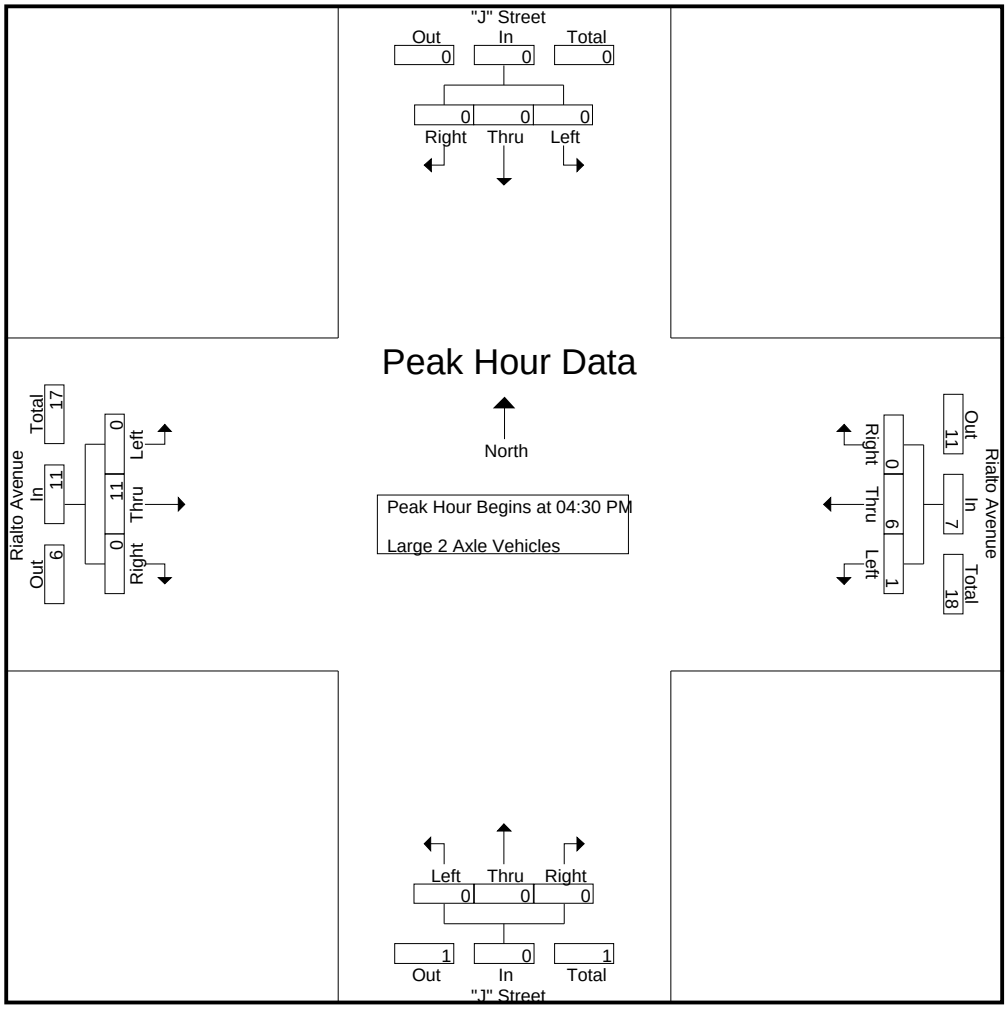

Peak Hour Analysis From 04:30 PM to 05:15 PM - Peak 1 of 1

Peak Hour for Each Approach Begins at:

	04:30 PM				04:30 PM				04:30 PM				04:30 PM			
+0 mins.	0	0	0	0	**1**	**2**	0	**3**	0	0	0	0	0	3	0	3
+15 mins.	0	0	0	0	0	2	0	2	0	0	0	0	0	2	0	2
+30 mins.	0	0	0	0	0	1	0	1	0	0	0	0	0	**4**	0	**4**
+45 mins.	0	0	0	0	0	1	0	1	0	0	0	0	0	2	0	2
Total Volume	0	0	0	0	1	6	0	7	0	0	0	0	0	11	0	11
% App. Total	0	0	0		14.3	85.7	0		0	0	0		0	100	0	
PHF	.000	.000	.000	.000	.250	.750	.000	.583	.000	.000	.000	.000	.000	.688	.000	.688

Counts Unlimited Inc.
25286 Jaclyn Avenue
Moreno Valley, CA 92557
(951) 485-7934

City of San Bernardino
N/S: "J" Stret
E/W: Rialto Avenue
Weather: Sunny

File Name : SBCJRIPM
Site Code : 10089022
Start Date : 4/21/2010
Page No : 1

Groups Printed- 3 Axle Vehicles

	"J" Street Southbound				Rialto Avenue Westbound				"J" Street Northbound				Rialto Avenue Eastbound				
Start Time	Left	Thru	Right	App. Total	Left	Thru	Right	App. Total	Left	Thru	Right	App. Total	Left	Thru	Right	App. Total	Int. Total
04:00 PM	0	0	0	0	0	0	0	0	0	0	0	0	0	0	0	0	0
04:15 PM	0	0	0	0	0	0	0	0	0	0	0	0	0	0	0	0	0
04:30 PM	0	0	0	0	0	0	0	0	0	0	0	0	0	0	0	0	0
04:45 PM	0	0	0	0	0	0	0	0	0	0	0	0	0	0	0	0	0
Total	0	0	0	0	0	0	0	0	0	0	0	0	0	0	0	0	0
05:00 PM	0	0	0	0	0	0	0	0	0	0	0	0	0	0	0	0	0
05:15 PM	0	0	0	0	0	0	0	0	0	0	0	0	0	0	0	0	0
05:30 PM	0	0	0	0	0	0	0	0	0	0	0	0	0	0	0	0	0
05:45 PM	0	0	0	0	0	0	0	0	0	0	0	0	0	0	0	0	0
Total	0	0	0	0	0	0	0	0	0	0	0	0	0	0	0	0	0
Grand Total	0	0	0	0	0	0	0	0	0	0	0	0	0	0	0	0	0
Apprch %	0	0	0		0	0	0		0	0	0		0	0	0		
Total %																	

	"J" Street Southbound				Rialto Avenue Westbound				"J" Street Northbound				Rialto Avenue Eastbound				
Start Time	Left	Thru	Right	App. Total	Left	Thru	Right	App. Total	Left	Thru	Right	App. Total	Left	Thru	Right	App. Total	Int. Total
Peak Hour Analysis From 04:30 PM to 05:15 PM - Peak 1 of 1																	
Peak Hour for Entire Intersection Begins at 04:30 PM																	
04:30 PM	0	0	0	0	0	0	0	0	0	0	0	0	0	0	0	0	0
04:45 PM	0	0	0	0	0	0	0	0	0	0	0	0	0	0	0	0	0
05:00 PM	0	0	0	0	0	0	0	0	0	0	0	0	0	0	0	0	0
05:15 PM	0	0	0	0	0	0	0	0	0	0	0	0	0	0	0	0	0
Total Volume	0	0	0	0	0	0	0	0	0	0	0	0	0	0	0	0	0
% App. Total	0	0	0		0	0	0		0	0	0		0	0	0		
PHF	.000	.000	.000	.000	.000	.000	.000	.000	.000	.000	.000	.000	.000	.000	.000	.000	.000

Counts Unlimited Inc.
25286 Jaclyn Avenue
Moreno Valley, CA 92557
(951) 485-7934

City of San Bernardino
N/S: "J" Stret
E/W: Rialto Avenue
Weather: Sunny

File Name : SBCJRIPM
Site Code : 10089022
Start Date : 4/21/2010
Page No : 2

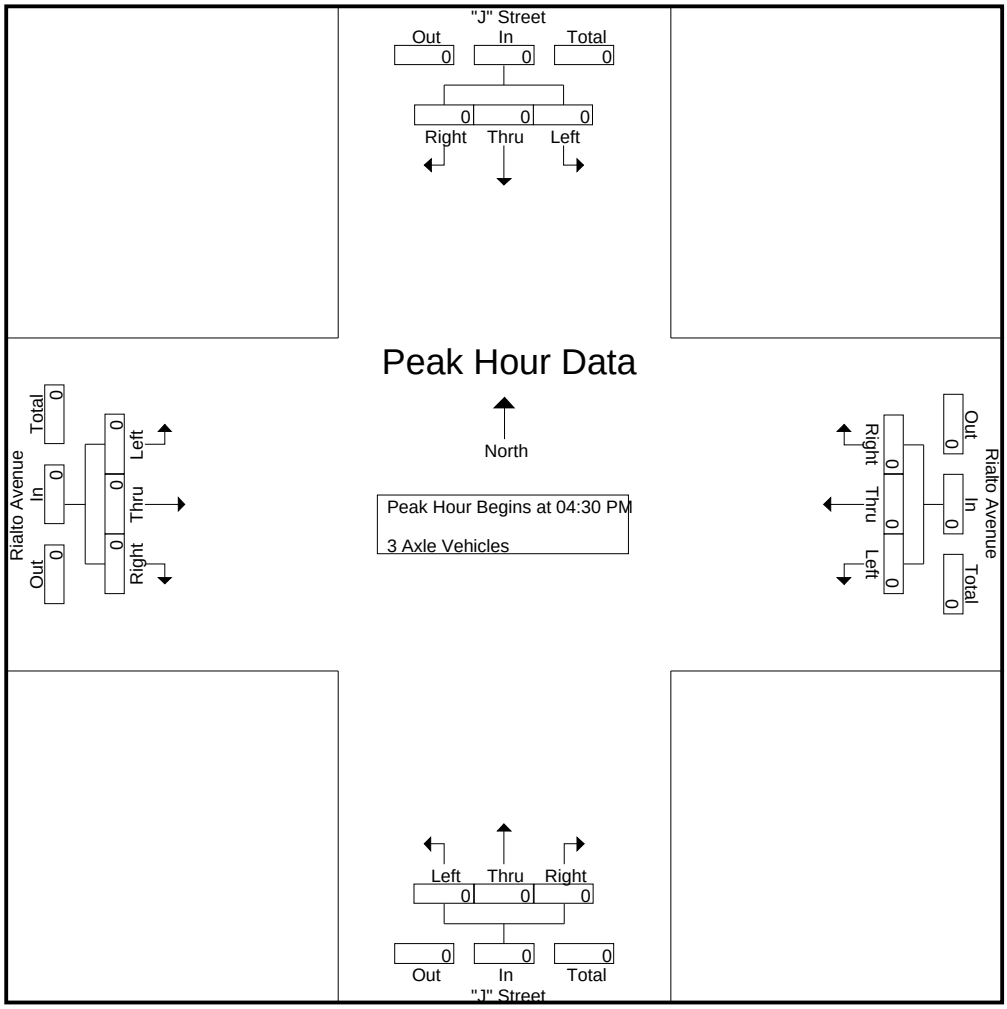

Peak Hour Analysis From 04:30 PM to 05:15 PM - Peak 1 of 1

Peak Hour for Each Approach Begins at:

	04:30 PM				04:30 PM				04:30 PM				04:30 PM			
+0 mins.	0	0	0	0	0	0	0	0	0	0	0	0	0	0	0	0
+15 mins.	0	0	0	0	0	0	0	0	0	0	0	0	0	0	0	0
+30 mins.	0	0	0	0	0	0	0	0	0	0	0	0	0	0	0	0
+45 mins.	0	0	0	0	0	0	0	0	0	0	0	0	0	0	0	0
Total Volume	0	0	0	0	0	0	0	0	0	0	0	0	0	0	0	0
% App. Total	0	0	0		0	0	0		0	0	0		0	0	0	
PHF	.000	.000	.000	.000	.000	.000	.000	.000	.000	.000	.000	.000	.000	.000	.000	.000

Counts Unlimited Inc.
25286 Jaclyn Avenue
Moreno Valley, CA 92557
(951) 485-7934

City of San Bernardino
N/S: "J" Stret
E/W: Rialto Avenue
Weather: Sunny

File Name : SBCJRIPM
Site Code : 10089022
Start Date : 4/21/2010
Page No : 1

Groups Printed- 4+ Axle Trucks

	"J" Street Southbound				Rialto Avenue Westbound				"J" Street Northbound				Rialto Avenue Eastbound				
Start Time	Left	Thru	Right	App. Total	Left	Thru	Right	App. Total	Left	Thru	Right	App. Total	Left	Thru	Right	App. Total	Int. Total
04:00 PM	0	0	0	0	0	0	0	0	0	0	0	0	0	1	0	1	1
04:15 PM	0	0	0	0	0	0	0	0	0	0	0	0	0	0	0	0	0
04:30 PM	0	0	0	0	0	0	0	0	0	0	0	0	0	3	0	3	3
04:45 PM	0	0	0	0	0	0	0	0	0	0	0	0	0	0	0	0	0
Total	0	0	0	0	0	0	0	0	0	0	0	0	0	4	0	4	4
05:00 PM	0	0	0	0	0	0	0	0	0	0	0	0	0	1	0	1	1
05:15 PM	0	0	0	0	0	0	1	1	0	0	0	0	0	0	0	0	1
05:30 PM	0	0	0	0	0	2	0	2	0	0	0	0	0	0	0	0	2
05:45 PM	0	0	0	0	0	0	0	0	0	0	0	0	0	0	0	0	0
Total	0	0	0	0	0	2	1	3	0	0	0	0	0	1	0	1	4
Grand Total	0	0	0	0	0	2	1	3	0	0	0	0	0	5	0	5	8
Apprch %	0	0	0		0	66.7	33.3		0	0	0		0	100	0		
Total %	0	0	0	0	0	25	12.5	37.5	0	0	0	0	0	62.5	0	62.5	

	"J" Street Southbound				Rialto Avenue Westbound				"J" Street Northbound				Rialto Avenue Eastbound				
Start Time	Left	Thru	Right	App. Total	Left	Thru	Right	App. Total	Left	Thru	Right	App. Total	Left	Thru	Right	App. Total	Int. Total
Peak Hour Analysis From 04:30 PM to 05:15 PM - Peak 1 of 1																	
Peak Hour for Entire Intersection Begins at 04:30 PM																	
04:30 PM	0	0	0	0	0	0	0	0	0	0	0	0	0	**3**	0	**3**	**3**
04:45 PM	0	0	0	0	0	0	0	0	0	0	0	0	0	0	0	0	0
05:00 PM	0	0	0	0	0	0	0	0	0	0	0	0	0	1	0	1	1
05:15 PM	0	0	0	0	0	0	**1**	**1**	0	0	0	0	0	0	0	0	1
Total Volume	0	0	0	0	0	0	1	1	0	0	0	0	0	4	0	4	5
% App. Total	0	0	0		0	0	100		0	0	0		0	100	0		
PHF	.000	.000	.000	.000	.000	.000	.250	.250	.000	.000	.000	.000	.000	.333	.000	.333	.417

Counts Unlimited Inc.
25286 Jaclyn Avenue
Moreno Valley, CA 92557
(951) 485-7934

City of San Bernardino
N/S: "J" Stret
E/W: Rialto Avenue
Weather: Sunny

File Name : SBCJRIPM
Site Code : 10089022
Start Date : 4/21/2010
Page No : 2

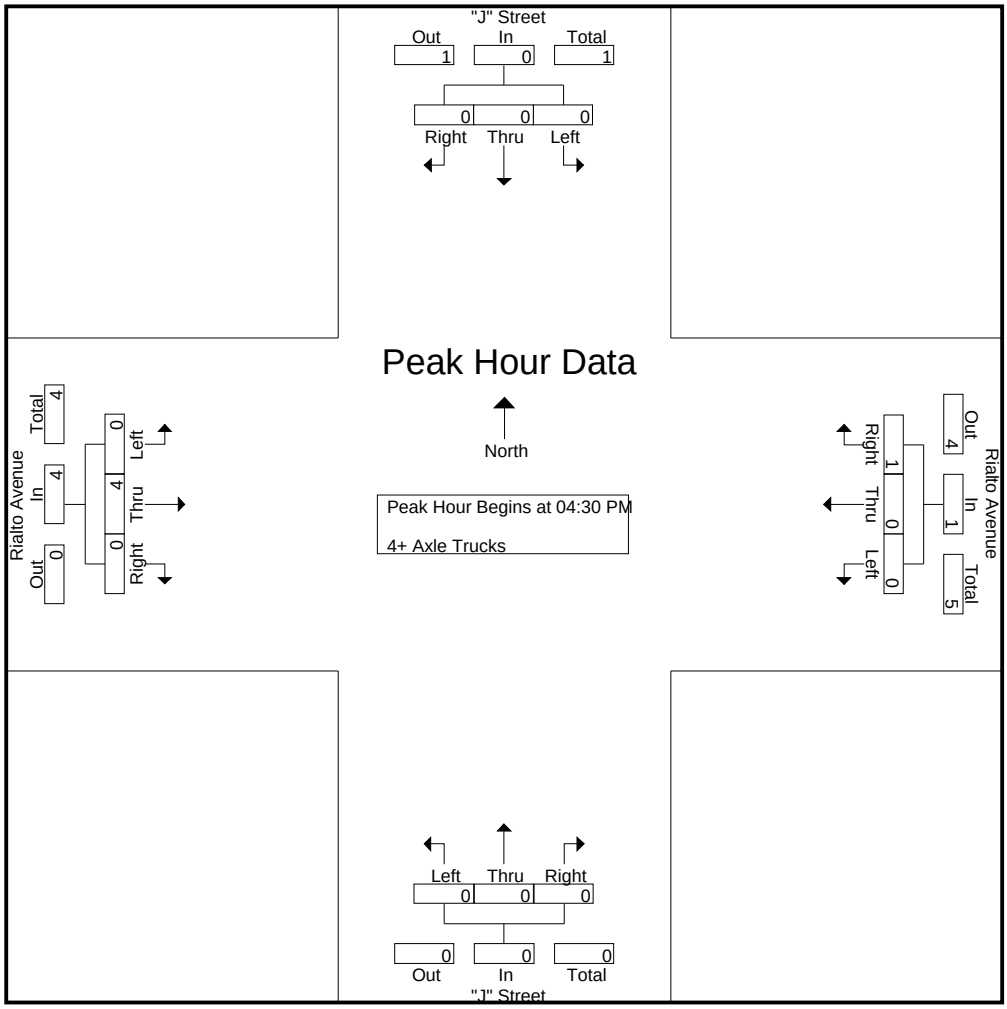

Peak Hour Analysis From 04:30 PM to 05:15 PM - Peak 1 of 1

Peak Hour for Each Approach Begins at:

	04:30 PM				04:30 PM				04:30 PM				04:30 PM			
+0 mins.	0	0	0	0	0	0	0	0	0	0	0	0	0	**3**	0	**3**
+15 mins.	0	0	0	0	0	0	0	0	0	0	0	0	0	0	0	0
+30 mins.	0	0	0	0	0	0	0	0	0	0	0	0	0	1	0	1
+45 mins.	0	0	0	0	0	0	**1**	**1**	0	0	0	0	0	0	0	0
Total Volume	0	0	0	0	0	0	1	1	0	0	0	0	0	4	0	4
% App. Total	0	0	0		0	0	100		0	0	0		0	100	0	
PHF	.000	.000	.000	.000	.000	.000	.250	.250	.000	.000	.000	.000	.000	.333	.000	.333

Counts Unlimited Inc.
25286 Jaclyn Avenue
Moreno Valley, CA 92557
(951) 485-7934

City of San Bernardino
N/S: "I" Street
E/W: 3rd Street
Weather: Sunny

File Name : SBCI3AM
Site Code : 9268066
Start Date : 10/21/2009
Page No : 1

Groups Printed- Total Volume

	"I" Street Southbound				3rd Street Westbound				"I" Street Northbound				3rd Street Eastbound				
Start Time	Left	Thru	Right	App. Total	Left	Thru	Right	App. Total	Left	Thru	Right	App. Total	Left	Thru	Right	App. Total	Int. Total
07:00 AM	40	93	23	156	4	7	0	11	3	0	5	8	0	9	1	10	185
07:15 AM	46	108	14	168	6	8	0	14	2	1	6	9	0	9	0	9	200
07:30 AM	32	83	21	136	12	7	0	19	5	0	4	9	0	9	3	12	176
07:45 AM	41	107	9	157	8	7	0	15	1	1	11	13	0	15	0	15	200
Total	159	391	67	617	30	29	0	59	11	2	26	39	0	42	4	46	761
08:00 AM	38	89	13	140	9	20	0	29	2	1	10	13	0	13	1	14	196
08:15 AM	31	95	13	139	3	5	0	8	3	1	7	11	0	5	0	5	163
08:30 AM	28	86	8	122	5	7	0	12	1	1	5	7	0	9	0	9	150
08:45 AM	31	73	8	112	5	9	0	14	3	0	5	8	0	10	3	13	147
Total	128	343	42	513	22	41	0	63	9	3	27	39	0	37	4	41	656
Grand Total	287	734	109	1130	52	70	0	122	20	5	53	78	0	79	8	87	1417
Apprch %	25.4	65	9.6		42.6	57.4	0		25.6	6.4	67.9		0	90.8	9.2		
Total %	20.3	51.8	7.7	79.7	3.7	4.9	0	8.6	1.4	0.4	3.7	5.5	0	5.6	0.6	6.1	

	"I" Street Southbound				3rd Street Westbound				"I" Street Northbound				3rd Street Eastbound				
Start Time	Left	Thru	Right	App. Total	Left	Thru	Right	App. Total	Left	Thru	Right	App. Total	Left	Thru	Right	App. Total	Int. Total
Peak Hour Analysis From 07:00 AM to 08:45 AM - Peak 1 of 1																	
Peak Hour for Entire Intersection Begins at 07:15 AM																	
07:15 AM	**46**	**108**	14	**168**	6	8	0	14	2	**1**	6	9	0	9	0	9	**200**
07:30 AM	32	83	**21**	136	**12**	7	0	19	**5**	0	4	9	0	9	**3**	12	176
07:45 AM	41	107	9	157	8	7	0	15	1	1	**11**	**13**	0	**15**	0	**15**	200
08:00 AM	38	89	13	140	9	**20**	0	**29**	2	1	10	13	0	13	1	14	196
Total Volume	157	387	57	601	35	42	0	77	10	3	31	44	0	46	4	50	772
% App. Total	26.1	64.4	9.5		45.5	54.5	0		22.7	6.8	70.5		0	92	8		
PHF	.853	.896	.679	.894	.729	.525	.000	.664	.500	.750	.705	.846	.000	.767	.333	.833	.965

Counts Unlimited Inc.
25286 Jaclyn Avenue
Moreno Valley, CA 92557
(951) 485-7934

City of San Bernardino
N/S: "I" Street
E/W: 3rd Street
Weather: Sunny

File Name : SBCI3AM
Site Code : 9268066
Start Date : 10/21/2009
Page No : 2

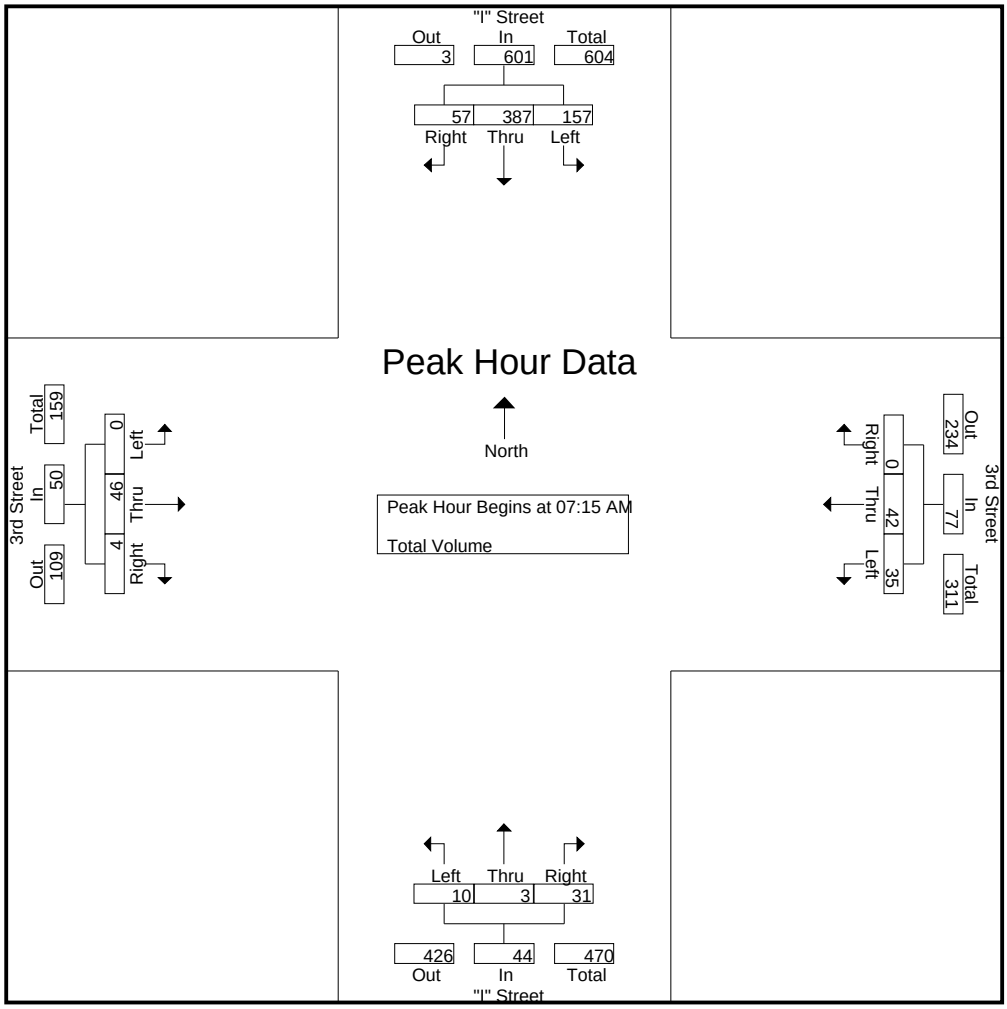

Peak Hour Analysis From 07:00 AM to 08:45 AM - Peak 1 of 1

Peak Hour for Each Approach Begins at:

	07:00 AM				07:15 AM				07:30 AM				07:15 AM			
+0 mins.	40	93	**23**	156	6	8	0	14	**5**	0	4	9	0	9	0	9
+15 mins.	**46**	**108**	14	**168**	**12**	7	0	19	1	**1**	**11**	**13**	0	9	**3**	12
+30 mins.	32	83	21	136	8	7	0	15	2	1	10	13	0	**15**	0	**15**
+45 mins.	41	107	9	157	9	**20**	0	**29**	3	1	7	11	0	13	1	14
Total Volume	159	391	67	617	35	42	0	77	11	3	32	46	0	46	4	50
% App. Total	25.8	63.4	10.9		45.5	54.5	0		23.9	6.5	69.6		0	92	8	
PHF	.864	.905	.728	.918	.729	.525	.000	.664	.550	.750	.727	.885	.000	.767	.333	.833

Counts Unlimited Inc.
25286 Jaclyn Avenue
Moreno Valley, CA 92557
(951) 485-7934

City of San Bernardino
N/S: "I" Street
E/W: 3rd Street
Weather: Sunny

File Name : SBCI3PM
Site Code : 9268066
Start Date : 10/20/2009
Page No : 1

Groups Printed- Total Volume

	"I" Street Southbound				3rd Street Westbound				"I" Street Northbound				3rd Street Eastbound				
Start Time	Left	Thru	Right	App. Total	Left	Thru	Right	App. Total	Left	Thru	Right	App. Total	Left	Thru	Right	App. Total	Int. Total
04:00 PM	18	58	14	90	12	13	0	25	2	0	10	12	1	19	4	24	151
04:15 PM	9	51	9	69	7	14	1	22	2	0	8	10	0	11	1	12	113
04:30 PM	18	61	13	92	11	11	0	22	1	1	7	9	0	16	1	17	140
04:45 PM	18	67	18	103	12	14	0	26	1	0	10	11	0	29	7	36	176
Total	63	237	54	354	42	52	1	95	6	1	35	42	1	75	13	89	580
05:00 PM	16	60	20	96	12	14	0	26	3	1	8	12	0	12	5	17	151
05:15 PM	10	57	9	76	7	12	0	19	3	0	7	10	0	26	6	32	137
05:30 PM	10	53	15	78	6	16	0	22	0	0	7	7	0	16	0	16	123
05:45 PM	16	55	9	80	11	14	0	25	0	1	7	8	0	50	9	59	172
Total	52	225	53	330	36	56	0	92	6	2	29	37	0	104	20	124	583
Grand Total	115	462	107	684	78	108	1	187	12	3	64	79	1	179	33	213	1163
Apprch %	16.8	67.5	15.6		41.7	57.8	0.5		15.2	3.8	81		0.5	84	15.5		
Total %	9.9	39.7	9.2	58.8	6.7	9.3	0.1	16.1	1	0.3	5.5	6.8	0.1	15.4	2.8	18.3	

	"I" Street Southbound				3rd Street Westbound				"I" Street Northbound				3rd Street Eastbound				
Start Time	Left	Thru	Right	App. Total	Left	Thru	Right	App. Total	Left	Thru	Right	App. Total	Left	Thru	Right	App. Total	Int. Total
Peak Hour Analysis From 04:00 PM to 05:45 PM - Peak 1 of 1																	
Peak Hour for Entire Intersection Begins at 04:30 PM																	
04:30 PM	**18**	61	13	92	11	11	0	22	1	**1**	7	9	0	16	1	17	140
04:45 PM	18	**67**	18	**103**	**12**	**14**	0	**26**	1	0	**10**	11	0	**29**	**7**	**36**	**176**
05:00 PM	16	60	**20**	96	12	14	0	26	**3**	1	8	**12**	0	12	5	17	151
05:15 PM	10	57	9	76	7	12	0	19	3	0	7	10	0	26	6	32	137
Total Volume	62	245	60	367	42	51	0	93	8	2	32	42	0	83	19	102	604
% App. Total	16.9	66.8	16.3		45.2	54.8	0		19	4.8	76.2		0	81.4	18.6		
PHF	.861	.914	.750	.891	.875	.911	.000	.894	.667	.500	.800	.875	.000	.716	.679	.708	.858

Counts Unlimited Inc.
25286 Jaclyn Avenue
Moreno Valley, CA 92557
(951) 485-7934

City of San Bernardino
N/S: "I" Street
E/W: 3rd Street
Weather: Sunny

File Name : SBCI3PM
Site Code : 9268066
Start Date : 10/20/2009
Page No : 2

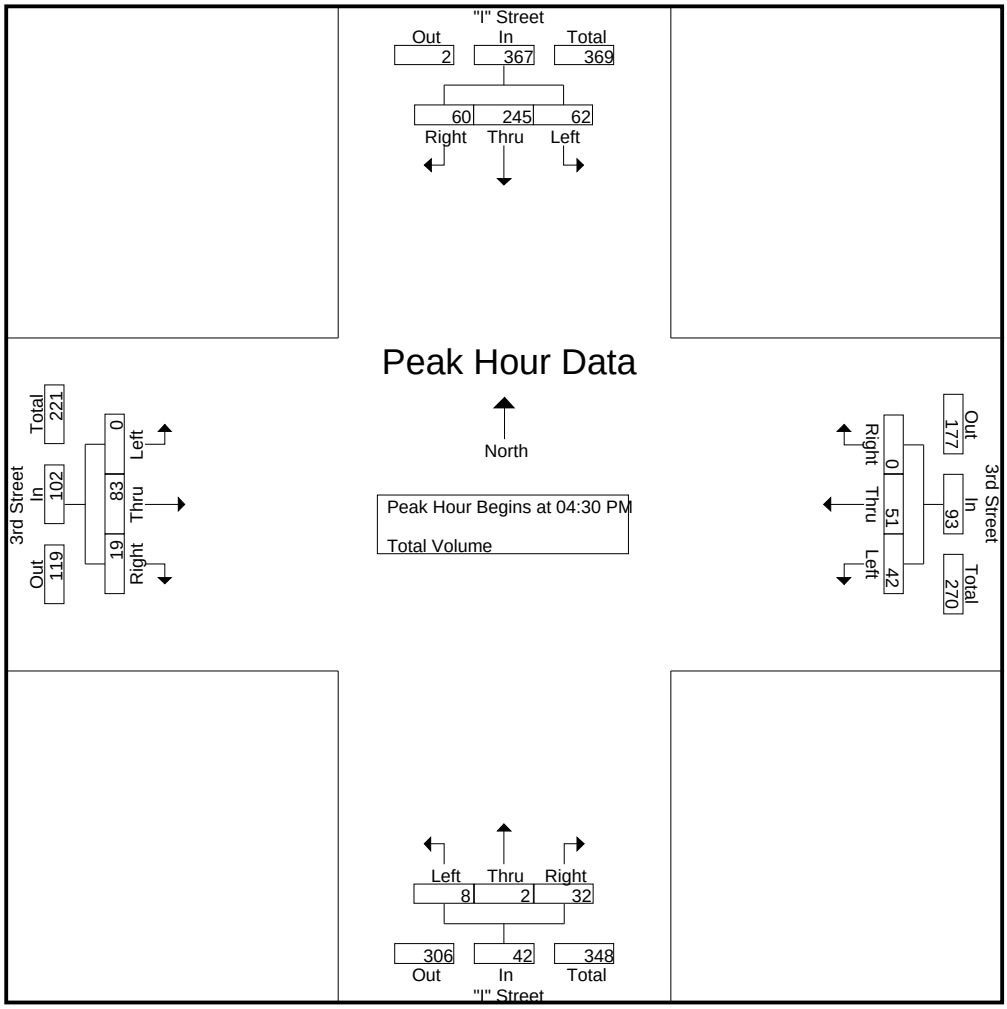

Peak Hour Analysis From 04:00 PM to 05:45 PM - Peak 1 of 1

Peak Hour for Each Approach Begins at:

	04:30 PM				04:15 PM				04:00 PM				05:00 PM			
+0 mins.	**18**	61	13	92	7	**14**	**1**	22	**2**	0	**10**	**12**	0	12	5	17
+15 mins.	18	**67**	18	**103**	11	11	0	22	2	0	8	10	0	26	6	32
+30 mins.	16	60	**20**	96	**12**	14	0	**26**	1	**1**	7	9	0	16	0	16
+45 mins.	10	57	9	76	12	14	0	26	1	0	10	11	0	**50**	**9**	**59**
Total Volume	62	245	60	367	42	53	1	96	6	1	35	42	0	104	20	124
% App. Total	16.9	66.8	16.3		43.8	55.2	1		14.3	2.4	83.3		0	83.9	16.1	
PHF	.861	.914	.750	.891	.875	.946	.250	.923	.750	.250	.875	.875	.000	.520	.556	.525

Counts Unlimited Inc.
25286 Jaclyn Avenue
Moreno Valley, CA 92557
(951) 485-7934

City of San Bernardino
N/S: "I" Street
E/W: 2nd Street
Weather: Sunny

File Name : SBCI2AM
Site Code : 9268137
Start Date : 10/21/2009
Page No : 1

Groups Printed- Total Volume

	"I" Street Southbound				2nd Street Westbound				"I" Street Northbound				2nd Street Eastbound				
Start Time	Left	Thru	Right	App. Total	Left	Thru	Right	App. Total	Left	Thru	Right	App. Total	Left	Thru	Right	App. Total	Int. Total
07:00 AM	37	57	4	98	2	39	2	43	0	3	21	24	1	53	3	57	222
07:15 AM	22	82	6	110	8	37	4	49	0	1	28	29	1	80	1	82	270
07:30 AM	24	64	3	91	8	43	3	54	2	1	41	44	1	80	0	81	270
07:45 AM	28	73	5	106	14	42	1	57	2	8	32	42	1	75	3	79	284
Total	111	276	18	405	32	161	10	203	4	13	122	139	4	288	7	299	1046
08:00 AM	37	53	3	93	6	36	4	46	0	6	24	30	2	70	0	72	241
08:15 AM	24	45	3	72	3	23	5	31	1	7	17	25	0	39	3	42	170
08:30 AM	27	39	5	71	1	20	1	22	0	4	24	28	0	34	1	35	156
08:45 AM	21	52	3	76	5	24	3	32	3	5	32	40	1	48	1	50	198
Total	109	189	14	312	15	103	13	131	4	22	97	123	3	191	5	199	765
Grand Total	220	465	32	717	47	264	23	334	8	35	219	262	7	479	12	498	1811
Apprch %	30.7	64.9	4.5		14.1	79	6.9		3.1	13.4	83.6		1.4	96.2	2.4		
Total %	12.1	25.7	1.8	39.6	2.6	14.6	1.3	18.4	0.4	1.9	12.1	14.5	0.4	26.4	0.7	27.5	

	"I" Street Southbound				2nd Street Westbound				"I" Street Northbound				2nd Street Eastbound				
Start Time	Left	Thru	Right	App. Total	Left	Thru	Right	App. Total	Left	Thru	Right	App. Total	Left	Thru	Right	App. Total	Int. Total
Peak Hour Analysis From 07:00 AM to 08:45 AM - Peak 1 of 1																	
Peak Hour for Entire Intersection Begins at 07:15 AM																	
07:15 AM	22	**82**	**6**	**110**	8	37	**4**	49	0	1	28	29	1	**80**	1	**82**	270
07:30 AM	24	64	3	91	8	**43**	3	54	**2**	1	**41**	**44**	1	80	0	81	270
07:45 AM	28	73	5	106	**14**	42	1	**57**	2	**8**	32	42	1	75	**3**	79	**284**
08:00 AM	**37**	53	3	93	6	36	4	46	0	6	24	30	**2**	70	0	72	241
Total Volume	111	272	17	400	36	158	12	206	4	16	125	145	5	305	4	314	1065
% App. Total	27.8	68	4.2		17.5	76.7	5.8		2.8	11	86.2		1.6	97.1	1.3		
PHF	.750	.829	.708	.909	.643	.919	.750	.904	.500	.500	.762	.824	.625	.953	.333	.957	.938

Counts Unlimited Inc.
25286 Jaclyn Avenue
Moreno Valley, CA 92557
(951) 485-7934

City of San Bernardino
N/S: "I" Street
E/W: 2nd Street
Weather: Sunny

File Name : SBCI2AM
Site Code : 9268137
Start Date : 10/21/2009
Page No : 2

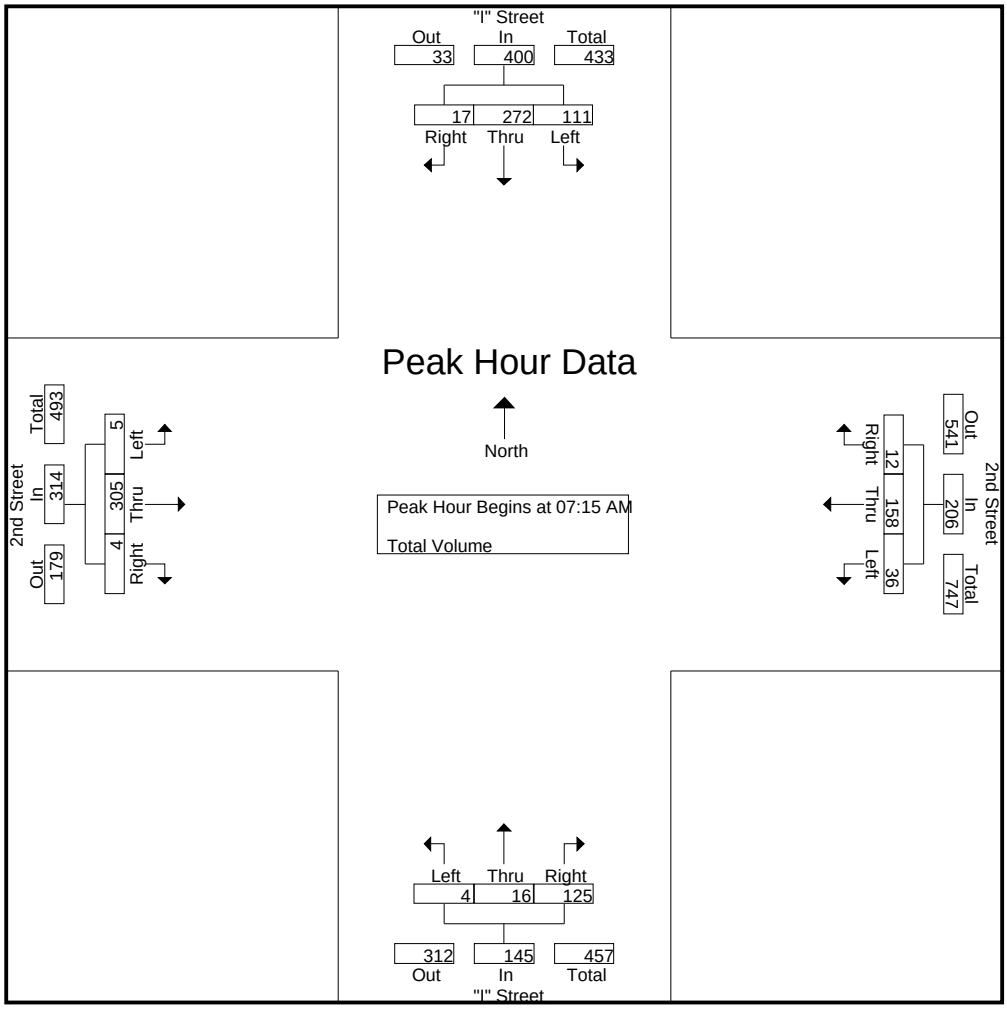

Peak Hour Analysis From 07:00 AM to 08:45 AM - Peak 1 of 1

Peak Hour for Each Approach Begins at:

	07:00 AM				07:15 AM				07:15 AM				07:15 AM			
+0 mins.	**37**	57	4	98	8	37	**4**	49	0	1	28	29	1	**80**	1	**82**
+15 mins.	22	**82**	**6**	**110**	8	**43**	3	54	**2**	1	**41**	**44**	1	80	0	81
+30 mins.	24	64	3	91	**14**	42	1	**57**	2	**8**	32	42	1	75	**3**	79
+45 mins.	28	73	5	106	6	36	4	46	0	6	24	30	**2**	70	0	72
Total Volume	111	276	18	405	36	158	12	206	4	16	125	145	5	305	4	314
% App. Total	27.4	68.1	4.4		17.5	76.7	5.8		2.8	11	86.2		1.6	97.1	1.3	
PHF	.750	.841	.750	.920	.643	.919	.750	.904	.500	.500	.762	.824	.625	.953	.333	.957

Counts Unlimited Inc.
25286 Jaclyn Avenue
Moreno Valley, CA 92557
(951) 485-7934

City of San Bernardino
N/S:"I" Street
E/W: 2nd Street
Weather: Sunny

File Name : SBCI2PM
Site Code : 9268137
Start Date : 10/21/2009
Page No : 1

Groups Printed- Total Volume

	"I" Street Southbound				2nd Street Westbound				"I" Street Northbound				2nd Street Eastbound				
Start Time	Left	Thru	Right	App. Total	Left	Thru	Right	App. Total	Left	Thru	Right	App. Total	Left	Thru	Right	App. Total	Int. Total
04:00 PM	13	44	9	66	5	48	0	53	0	9	61	70	4	82	4	90	279
04:15 PM	19	43	6	68	9	48	4	61	8	6	47	61	2	53	3	58	248
04:30 PM	24	49	10	83	7	55	1	63	4	8	52	64	2	75	2	79	289
04:45 PM	35	32	4	71	7	43	1	51	2	2	47	51	3	82	3	88	261
Total	91	168	29	288	28	194	6	228	14	25	207	246	11	292	12	315	1077
05:00 PM	24	30	9	63	11	49	2	62	4	8	57	69	1	94	2	97	291
05:15 PM	21	45	10	76	12	68	2	82	2	12	38	52	3	66	1	70	280
05:30 PM	21	41	6	68	5	61	3	69	3	6	54	63	2	79	1	82	282
05:45 PM	19	54	8	81	9	62	2	73	2	9	47	58	0	79	4	83	295
Total	85	170	33	288	37	240	9	286	11	35	196	242	6	318	8	332	1148
Grand Total	176	338	62	576	65	434	15	514	25	60	403	488	17	610	20	647	2225
Apprch %	30.6	58.7	10.8		12.6	84.4	2.9		5.1	12.3	82.6		2.6	94.3	3.1		
Total %	7.9	15.2	2.8	25.9	2.9	19.5	0.7	23.1	1.1	2.7	18.1	21.9	0.8	27.4	0.9	29.1	

	"I" Street Southbound				2nd Street Westbound				"I" Street Northbound				2nd Street Eastbound				
Start Time	Left	Thru	Right	App. Total	Left	Thru	Right	App. Total	Left	Thru	Right	App. Total	Left	Thru	Right	App. Total	Int. Total
Peak Hour Analysis From 04:00 PM to 05:45 PM - Peak 1 of 1																	
Peak Hour for Entire Intersection Begins at 05:00 PM																	
05:00 PM	**24**	30	9	63	11	49	2	62	**4**	8	**57**	**69**	1	**94**	2	**97**	291
05:15 PM	21	45	**10**	76	**12**	**68**	2	**82**	2	**12**	38	52	**3**	66	1	70	280
05:30 PM	21	41	6	68	5	61	**3**	69	3	6	54	63	2	79	1	82	282
05:45 PM	19	**54**	8	**81**	9	62	2	73	2	9	47	58	0	79	**4**	83	**295**
Total Volume	85	170	33	288	37	240	9	286	11	35	196	242	6	318	8	332	1148
% App. Total	29.5	59	11.5		12.9	83.9	3.1		4.5	14.5	81		1.8	95.8	2.4		
PHF	.885	.787	.825	.889	.771	.882	.750	.872	.688	.729	.860	.877	.500	.846	.500	.856	.973

Counts Unlimited Inc.
25286 Jaclyn Avenue
Moreno Valley, CA 92557
(951) 485-7934

City of San Bernardino
N/S:"I" Street
E/W: 2nd Street
Weather: Sunny

File Name : SBCI2PM
Site Code : 9268137
Start Date : 10/21/2009
Page No : 2

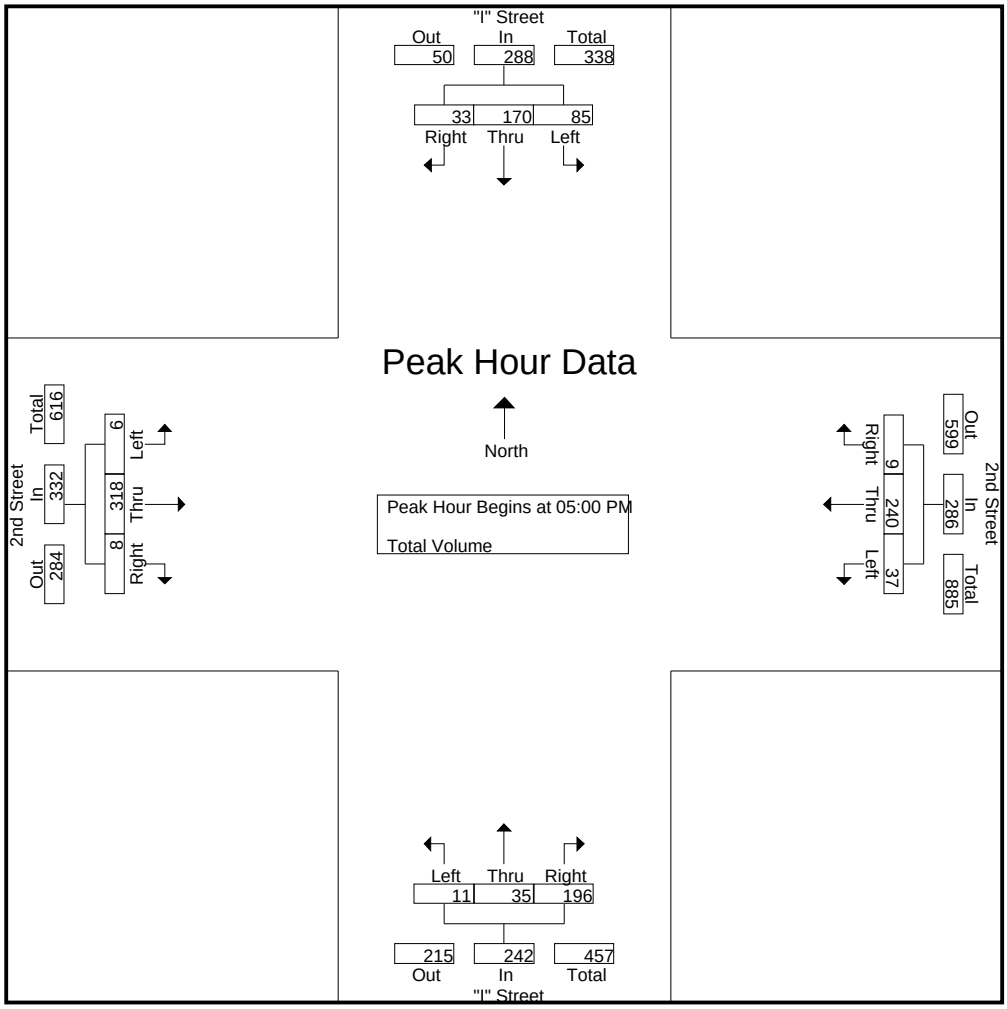

Peak Hour Analysis From 04:00 PM to 05:45 PM - Peak 1 of 1

Peak Hour for Each Approach Begins at:

	04:30 PM				05:00 PM				04:00 PM				04:45 PM			
+0 mins.	24	**49**	**10**	**83**	11	49	2	62	0	**9**	**61**	**70**	**3**	82	**3**	88
+15 mins.	**35**	32	4	71	**12**	**68**	2	**82**	**8**	6	47	61	1	**94**	2	**97**
+30 mins.	24	30	9	63	5	61	**3**	69	4	8	52	64	3	66	1	70
+45 mins.	21	45	10	76	9	62	2	73	2	2	47	51	2	79	1	82
Total Volume	104	156	33	293	37	240	9	286	14	25	207	246	9	321	7	337
% App. Total	35.5	53.2	11.3		12.9	83.9	3.1		5.7	10.2	84.1		2.7	95.3	2.1	
PHF	.743	.796	.825	.883	.771	.882	.750	.872	.438	.694	.848	.879	.750	.854	.583	.869

Counts Unlimited Inc.
25286 Jaclyn Avenue
Moreno Valley, CA 92557
(951) 485-7934

City of San Bernardino
N/S: "I" Street
E/W: Rialto Avenue
Weather: Sunny

File Name : SBCIRIAM
Site Code : 9268083
Start Date : 10/21/2009
Page No : 1

Groups Printed- Total Volume

	"I" Street Southbound				Rialto Avenue Westbound				"I" Street Northbound				Rialto Avenue Eastbound				
Start Time	Left	Thru	Right	App. Total	Left	Thru	Right	App. Total	Left	Thru	Right	App. Total	Left	Thru	Right	App. Total	Int. Total
07:00 AM	35	8	18	61	8	32	1	41	3	13	9	25	9	64	2	75	202
07:15 AM	37	25	23	85	10	35	2	47	0	7	15	22	23	83	4	110	264
07:30 AM	26	34	25	85	5	46	7	58	0	15	15	30	26	113	5	144	317
07:45 AM	27	34	27	88	10	71	4	85	3	18	17	38	17	120	2	139	350
Total	125	101	93	319	33	184	14	231	6	53	56	115	75	380	13	468	1133
08:00 AM	30	28	20	78	14	54	3	71	5	23	17	45	17	101	8	126	320
08:15 AM	28	18	23	69	10	40	3	53	1	15	16	32	20	84	4	108	262
08:30 AM	24	21	19	64	15	59	2	76	0	16	13	29	12	85	1	98	267
08:45 AM	27	17	24	68	11	61	4	76	1	16	15	32	11	89	3	103	279
Total	109	84	86	279	50	214	12	276	7	70	61	138	60	359	16	435	1128
Grand Total	234	185	179	598	83	398	26	507	13	123	117	253	135	739	29	903	2261
Apprch %	39.1	30.9	29.9		16.4	78.5	5.1		5.1	48.6	46.2		15	81.8	3.2		
Total %	10.3	8.2	7.9	26.4	3.7	17.6	1.1	22.4	0.6	5.4	5.2	11.2	6	32.7	1.3	39.9	

	"I" Street Southbound				Rialto Avenue Westbound				"I" Street Northbound				Rialto Avenue Eastbound				
Start Time	Left	Thru	Right	App. Total	Left	Thru	Right	App. Total	Left	Thru	Right	App. Total	Left	Thru	Right	App. Total	Int. Total
Peak Hour Analysis From 07:00 AM to 08:45 AM - Peak 1 of 1																	
Peak Hour for Entire Intersection Begins at 07:15 AM																	
07:15 AM	**37**	25	23	85	10	35	2	47	0	7	15	22	23	83	4	110	264
07:30 AM	26	**34**	25	85	5	46	**7**	58	0	15	15	30	**26**	113	5	**144**	317
07:45 AM	27	34	**27**	**88**	10	**71**	4	**85**	3	18	**17**	38	17	**120**	2	139	**350**
08:00 AM	30	28	20	78	**14**	54	3	71	**5**	**23**	17	**45**	17	101	**8**	126	320
Total Volume	120	121	95	336	39	206	16	261	8	63	64	135	83	417	19	519	1251
% App. Total	35.7	36	28.3		14.9	78.9	6.1		5.9	46.7	47.4		16	80.3	3.7		
PHF	.811	.890	.880	.955	.696	.725	.571	.768	.400	.685	.941	.750	.798	.869	.594	.901	.894

Counts Unlimited Inc.
25286 Jaclyn Avenue
Moreno Valley, CA 92557
(951) 485-7934

City of San Bernardino
N/S: "I" Street
E/W: Rialto Avenue
Weather: Sunny

File Name : SBCIRIAM
Site Code : 9268083
Start Date : 10/21/2009
Page No : 2

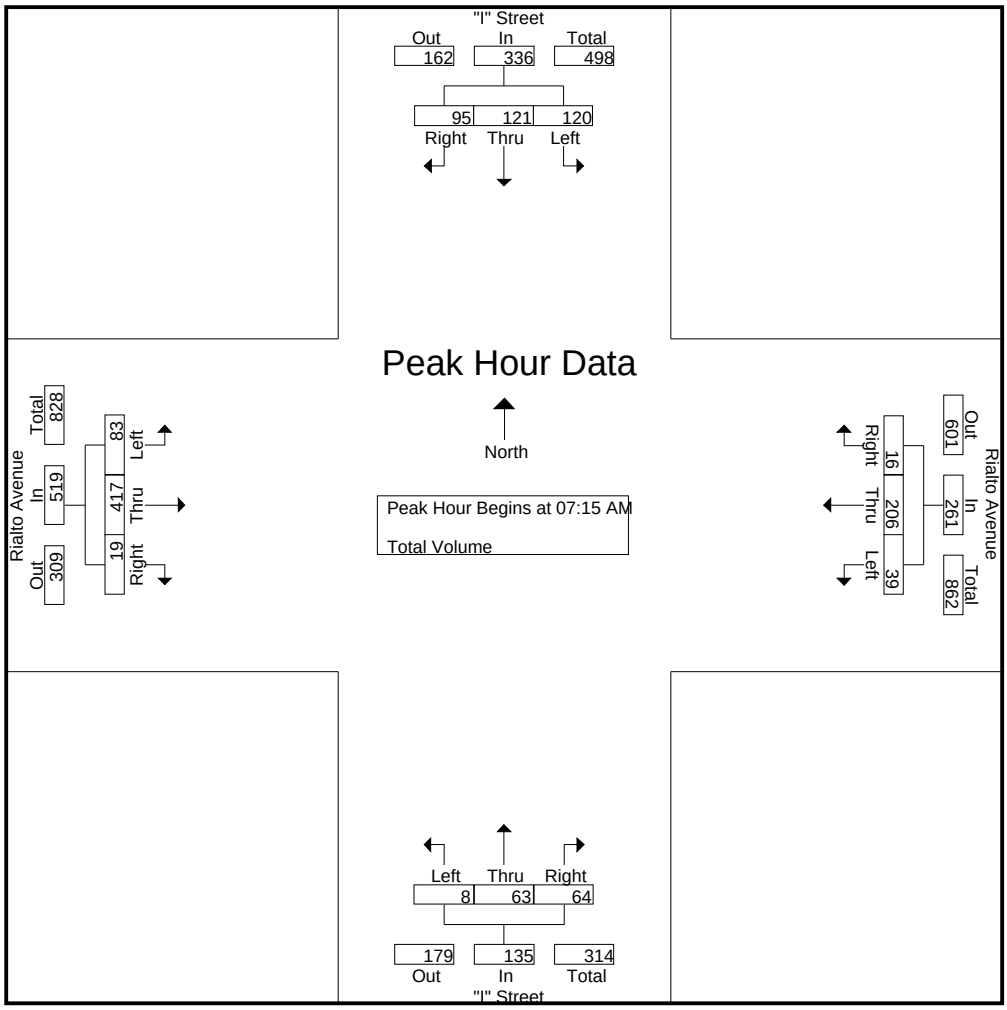

Peak Hour Analysis From 07:00 AM to 08:45 AM - Peak 1 of 1
Peak Hour for Each Approach Begins at:

	07:15 AM				07:45 AM				07:30 AM				07:15 AM			
+0 mins.	**37**	25	23	85	10	**71**	**4**	**85**	0	15	15	30	23	83	4	110
+15 mins.	26	**34**	25	85	14	54	3	71	3	18	**17**	38	**26**	113	5	**144**
+30 mins.	27	34	**27**	**88**	10	40	3	53	**5**	**23**	17	**45**	17	**120**	2	139
+45 mins.	30	28	20	78	**15**	59	2	76	1	15	16	32	17	101	**8**	126
Total Volume	120	121	95	336	49	224	12	285	9	71	65	145	83	417	19	519
% App. Total	35.7	36	28.3		17.2	78.6	4.2		6.2	49	44.8		16	80.3	3.7	
PHF	.811	.890	.880	.955	.817	.789	.750	.838	.450	.772	.956	.806	.798	.869	.594	.901

Counts Unlimited Inc.
25286 Jaclyn Avenue
Moreno Valley, CA 92557
(951) 485-7934

City of San Bernardino
N/S: "I" Street
E/W: Rialto Avenue
Weather: Sunny

File Name : SBCIRIPM
Site Code : 9268083
Start Date : 10/21/2009
Page No : 1

Groups Printed- Total Volume

	"I" Street Southbound				Rialto Avenue Westbound				"I" Street Northbound				Rialto Avenue Eastbound				
Start Time	Left	Thru	Right	App. Total	Left	Thru	Right	App. Total	Left	Thru	Right	App. Total	Left	Thru	Right	App. Total	Int. Total
04:00 PM	17	27	19	63	5	110	5	120	3	43	22	68	17	91	3	111	362
04:15 PM	12	21	18	51	6	101	10	117	1	35	21	57	29	82	5	116	341
04:30 PM	12	24	22	58	13	106	12	131	3	28	19	50	14	71	5	90	329
04:45 PM	14	19	23	56	12	130	5	147	2	21	17	40	27	65	5	97	340
Total	55	91	82	228	36	447	32	515	9	127	79	215	87	309	18	414	1372
05:00 PM	11	17	26	54	11	164	14	189	5	32	22	59	13	81	2	96	398
05:15 PM	9	30	24	63	13	134	8	155	3	25	16	44	23	93	7	123	385
05:30 PM	9	18	27	54	11	107	9	127	4	39	14	57	22	80	2	104	342
05:45 PM	14	24	24	62	10	139	6	155	2	37	13	52	26	103	6	135	404
Total	43	89	101	233	45	544	37	626	14	133	65	212	84	357	17	458	1529
Grand Total	98	180	183	461	81	991	69	1141	23	260	144	427	171	666	35	872	2901
Apprch %	21.3	39	39.7		7.1	86.9	6		5.4	60.9	33.7		19.6	76.4	4		
Total %	3.4	6.2	6.3	15.9	2.8	34.2	2.4	39.3	0.8	9	5	14.7	5.9	23	1.2	30.1	

	"I" Street Southbound				Rialto Avenue Westbound				"I" Street Northbound				Rialto Avenue Eastbound				
Start Time	Left	Thru	Right	App. Total	Left	Thru	Right	App. Total	Left	Thru	Right	App. Total	Left	Thru	Right	App. Total	Int. Total
Peak Hour Analysis From 04:00 PM to 05:45 PM - Peak 1 of 1																	
Peak Hour for Entire Intersection Begins at 05:00 PM																	
05:00 PM	11	17	26	54	11	**164**	**14**	**189**	**5**	32	**22**	**59**	13	81	2	96	398
05:15 PM	9	**30**	24	**63**	**13**	134	8	155	3	25	16	44	23	93	**7**	123	385
05:30 PM	9	18	**27**	54	11	107	9	127	4	**39**	14	57	22	80	2	104	342
05:45 PM	**14**	24	24	62	10	139	6	155	2	37	13	52	**26**	**103**	6	**135**	**404**
Total Volume	43	89	101	233	45	544	37	626	14	133	65	212	84	357	17	458	1529
% App. Total	18.5	38.2	43.3		7.2	86.9	5.9		6.6	62.7	30.7		18.3	77.9	3.7		
PHF	.768	.742	.935	.925	.865	.829	.661	.828	.700	.853	.739	.898	.808	.867	.607	.848	.946

Counts Unlimited Inc.
25286 Jaclyn Avenue
Moreno Valley, CA 92557
(951) 485-7934

City of San Bernardino
N/S: "I" Street
E/W: Rialto Avenue
Weather: Sunny

File Name : SBCIRIPM
Site Code : 9268083
Start Date : 10/21/2009
Page No : 2

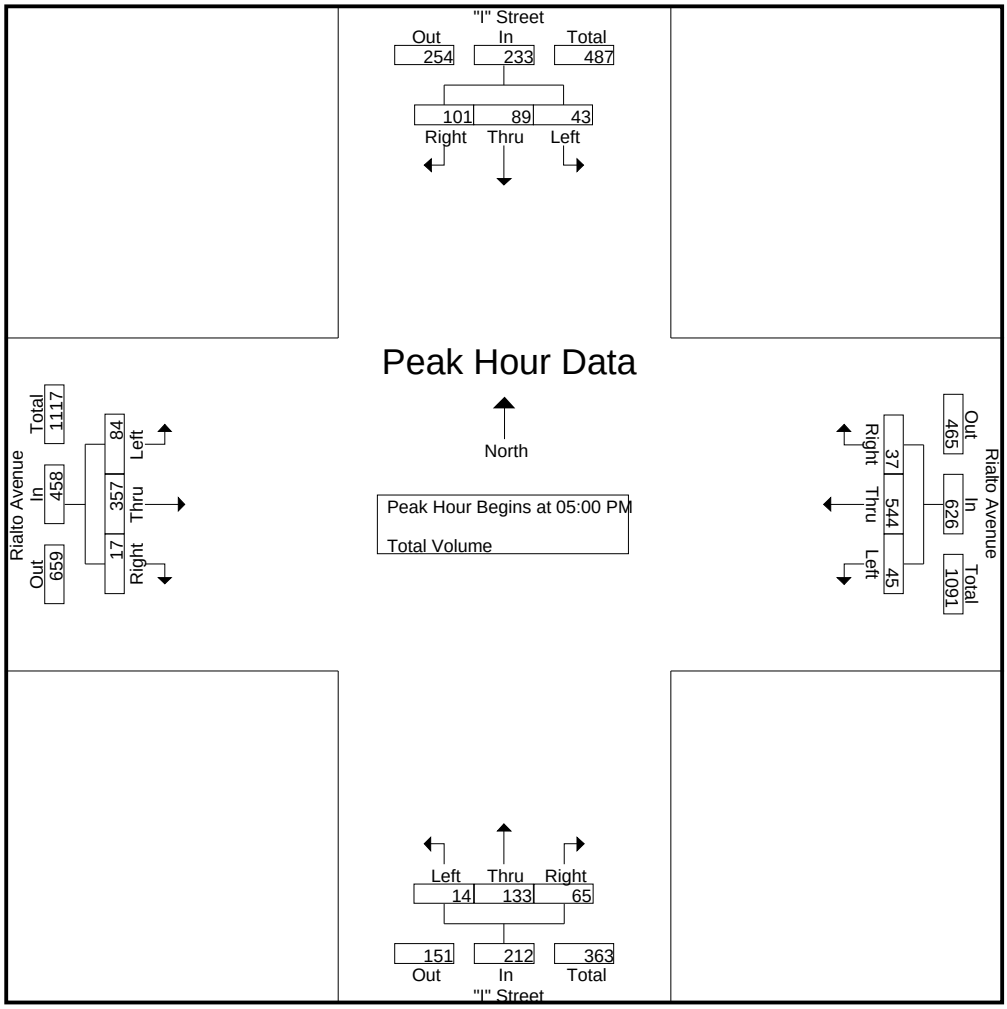

Peak Hour Analysis From 04:00 PM to 05:45 PM - Peak 1 of 1

Peak Hour for Each Approach Begins at:

	05:00 PM				05:00 PM				04:00 PM				05:00 PM			
+0 mins.	11	17	26	54	11	**164**	**14**	**189**	**3**	**43**	**22**	**68**	13	81	2	96
+15 mins.	9	**30**	24	**63**	**13**	134	8	155	1	35	21	57	23	93	**7**	123
+30 mins.	9	18	**27**	54	11	107	9	127	3	28	19	50	22	80	2	104
+45 mins.	**14**	24	24	62	10	139	6	155	2	21	17	40	**26**	**103**	6	**135**
Total Volume	43	89	101	233	45	544	37	626	9	127	79	215	84	357	17	458
% App. Total	18.5	38.2	43.3		7.2	86.9	5.9		4.2	59.1	36.7		18.3	77.9	3.7	
PHF	.768	.742	.935	.925	.865	.829	.661	.828	.750	.738	.898	.790	.808	.867	.607	.848

Counts Unlimited Inc.
25286 Jaclyn Avenue
Moreno Valley, CA 92557
(951) 485-7934

City of San Bernardino
N/S: I-215 Southbound On Ramp
E/W: 2nd Street
Weather: Sunny

File Name : SBC215S2AM
Site Code : 9268131
Start Date : 10/21/2009
Page No : 1

Groups Printed- Total Volume

	2nd Street Westbound			I-215 Southbound On Ramp Northbound			2nd Street Eastbound			
Start Time	Left	Thru	App. Total	Left	Right	App. Total	Thru	Right	App. Total	Int. Total
07:00 AM	44	35	79	0	0	0	85	22	107	186
07:15 AM	45	51	96	0	0	0	105	35	140	236
07:30 AM	48	58	106	0	0	0	105	47	152	258
07:45 AM	56	60	116	0	0	0	104	41	145	261
Total	193	204	397	0	0	0	399	145	544	941
08:00 AM	48	49	97	0	0	0	104	37	141	238
08:15 AM	53	44	97	0	0	0	86	21	107	204
08:30 AM	71	36	107	0	0	0	78	21	99	206
08:45 AM	61	37	98	0	0	0	80	28	108	206
Total	233	166	399	0	0	0	348	107	455	854
Grand Total	426	370	796	0	0	0	747	252	999	1795
Apprch %	53.5	46.5		0	0		74.8	25.2		
Total %	23.7	20.6	44.3	0	0	0	41.6	14	55.7	

	2nd Street Westbound			I-215 Southbound On Ramp Northbound			2nd Street Eastbound			
Start Time	Left	Thru	App. Total	Left	Right	App. Total	Thru	Right	App. Total	Int. Total
Peak Hour Analysis From 07:00 AM to 08:45 AM - Peak 1 of 1										
Peak Hour for Entire Intersection Begins at 07:15 AM										
07:15 AM	45	51	96	0	0	0	**105**	35	140	236
07:30 AM	48	58	106	0	0	0	105	**47**	**152**	258
07:45 AM	**56**	**60**	**116**	0	0	0	104	41	145	**261**
08:00 AM	48	49	97	0	0	0	104	37	141	238
Total Volume	197	218	415	0	0	0	418	160	578	993
% App. Total	47.5	52.5		0	0		72.3	27.7		
PHF	.879	.908	.894	.000	.000	.000	.995	.851	.951	.951

Counts Unlimited Inc.
25286 Jaclyn Avenue
Moreno Valley, CA 92557
(951) 485-7934

City of San Bernardino
N/S: I-215 Southbound On Ramp
E/W: 2nd Street
Weather: Sunny

File Name : SBC215S2AM
Site Code : 9268131
Start Date : 10/21/2009
Page No : 2

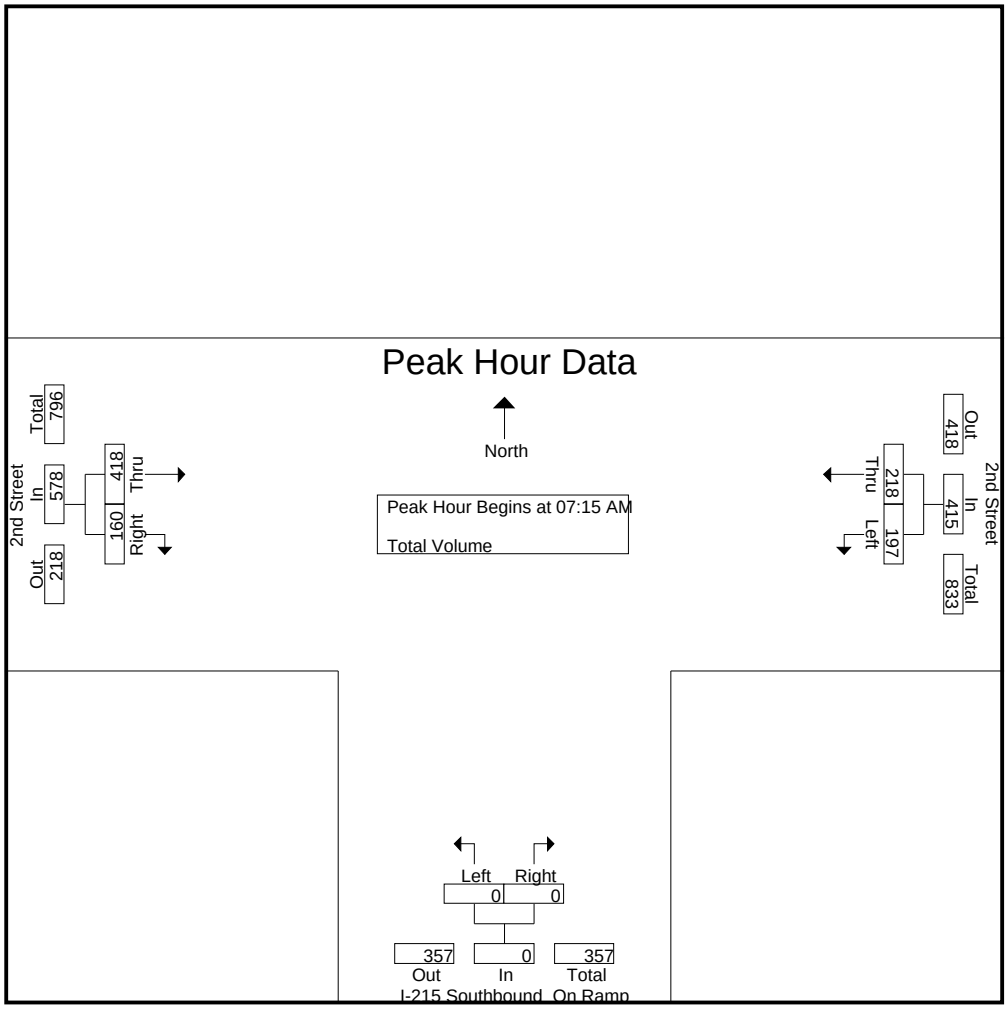

Peak Hour Analysis From 07:00 AM to 08:45 AM - Peak 1 of 1

Peak Hour for Each Approach Begins at:

	07:45 AM			07:00 AM			07:15 AM		
+0 mins.	56	**60**	**116**	0	0	0	**105**	35	140
+15 mins.	48	49	97	0	0	0	105	**47**	**152**
+30 mins.	53	44	97	0	0	0	104	41	145
+45 mins.	**71**	36	107	0	0	0	104	37	141
Total Volume	228	189	417	0	0	0	418	160	578
% App. Total	54.7	45.3		0	0		72.3	27.7	
PHF	.803	.788	.899	.000	.000	.000	.995	.851	.951

Counts Unlimited Inc.
25286 Jaclyn Avenue
Moreno Valley, CA 92557
(951) 485-7934

City of San Bernardino
N/S: I-215 Southbound On Ramp
E/W: 2nd Street
Weather: Sunny

File Name : SBC215S2PM
Site Code : 9268131
Start Date : 10/21/2009
Page No : 1

Groups Printed- Total Volume

	2nd Street Westbound			I-215 Southbound On Ramp Northbound			2nd Street Eastbound			
Start Time	Left	Thru	App. Total	Left	Right	App. Total	Thru	Right	App. Total	Int. Total
04:00 PM	143	49	192	0	0	0	132	35	167	359
04:15 PM	124	71	195	0	0	0	94	25	119	314
04:30 PM	171	63	234	0	0	0	103	39	142	376
04:45 PM	144	64	208	0	0	0	116	40	156	364
Total	582	247	829	0	0	0	445	139	584	1413
05:00 PM	190	69	259	0	0	0	112	55	167	426
05:15 PM	160	89	249	0	0	0	110	23	133	382
05:30 PM	180	73	253	0	0	0	122	40	162	415
05:45 PM	120	83	203	0	0	0	124	41	165	368
Total	650	314	964	0	0	0	468	159	627	1591
Grand Total	1232	561	1793	0	0	0	913	298	1211	3004
Apprch %	68.7	31.3		0	0		75.4	24.6		
Total %	41	18.7	59.7	0	0	0	30.4	9.9	40.3	

	2nd Street Westbound			I-215 Southbound On Ramp Northbound			2nd Street Eastbound			
Start Time	Left	Thru	App. Total	Left	Right	App. Total	Thru	Right	App. Total	Int. Total
Peak Hour Analysis From 04:00 PM to 05:45 PM - Peak 1 of 1										
Peak Hour for Entire Intersection Begins at 05:00 PM										
05:00 PM	**190**	69	**259**	0	0	0	112	**55**	**167**	**426**
05:15 PM	160	**89**	249	0	0	0	110	23	133	382
05:30 PM	180	73	253	0	0	0	122	40	162	415
05:45 PM	120	83	203	0	0	0	**124**	41	165	368
Total Volume	650	314	964	0	0	0	468	159	627	1591
% App. Total	67.4	32.6		0	0		74.6	25.4		
PHF	.855	.882	.931	.000	.000	.000	.944	.723	.939	.934

Counts Unlimited Inc.
25286 Jaclyn Avenue
Moreno Valley, CA 92557
(951) 485-7934

City of San Bernardino
N/S: I-215 Southbound On Ramp
E/W: 2nd Street
Weather: Sunny

File Name : SBC215S2PM
Site Code : 9268131
Start Date : 10/21/2009
Page No : 2

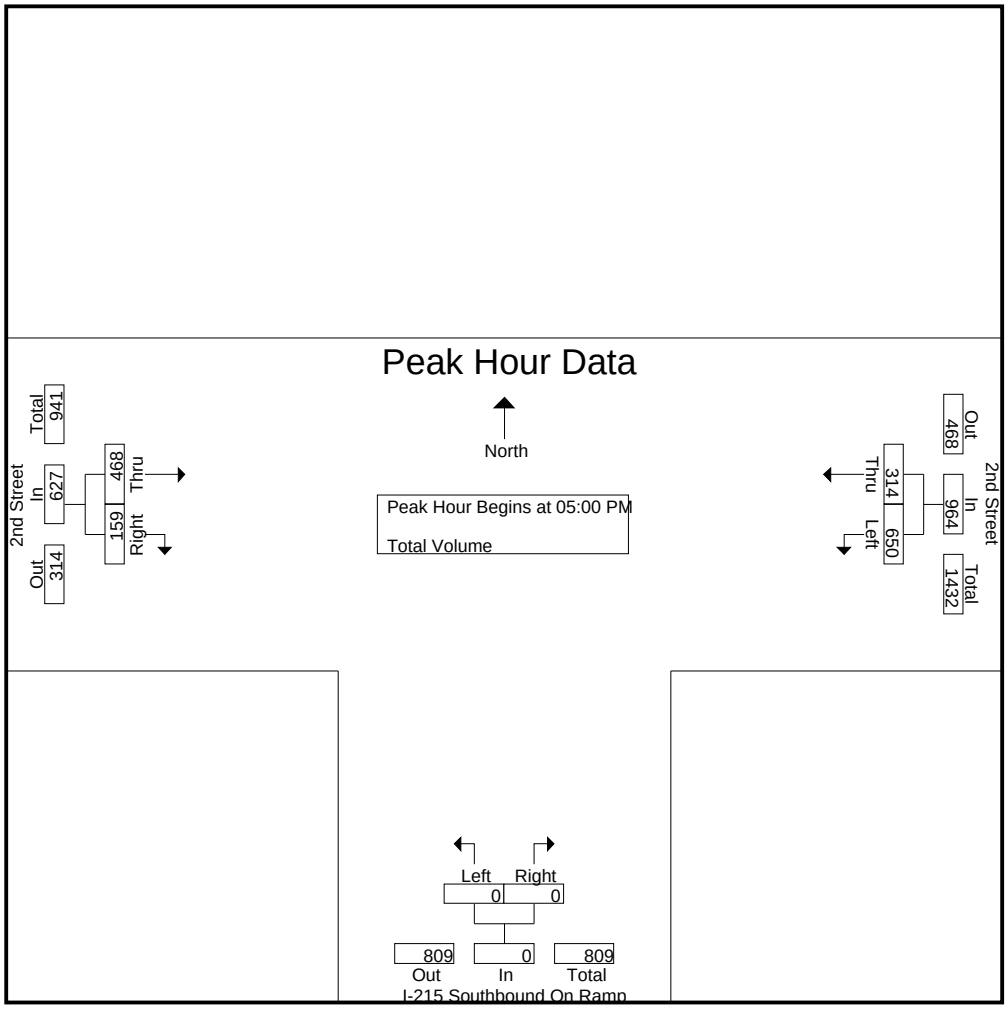

Peak Hour Analysis From 04:00 PM to 05:45 PM - Peak 1 of 1

Peak Hour for Each Approach Begins at:

	04:45 PM			04:00 PM			05:00 PM		
+0 mins.	144	64	208	0	0	0	112	**55**	**167**
+15 mins.	**190**	69	**259**	0	0	0	110	23	133
+30 mins.	160	**89**	249	0	0	0	122	40	162
+45 mins.	180	73	253	0	0	0	**124**	41	165
Total Volume	674	295	969	0	0	0	468	159	627
% App. Total	69.6	30.4		0	0		74.6	25.4	
PHF	.887	.829	.935	.000	.000	.000	.944	.723	.939

Counts Unlimited Inc.
25286 Jaclyn Avenue
Moreno Valley, CA 92557
(951) 485-7934

City of San Bernardino
N/S: I-215 Northbound Ramps
E/W: 2nd Street
Weather: Sunny

File Name : SBC215N2AM
Site Code : 9268135
Start Date : 10/21/2009
Page No : 1

Groups Printed- Total Volume

	I-215 Northbound On Ramp Southbound				2nd Street Westbound				I-215 Northbound Off Ramp Northbound				2nd Street Eastbound				
Start Time	Left	Thru	Right	App. Total	Left	Thru	Right	App. Total	Left	Thru	Right	App. Total	Left	Thru	Right	App. Total	Int. Total
07:00 AM	0	0	0	0	0	47	20	67	42	0	222	264	38	47	0	85	416
07:15 AM	0	0	0	0	0	60	42	102	49	0	317	366	55	51	0	106	574
07:30 AM	0	0	0	0	0	74	39	113	36	0	242	278	68	36	0	104	495
07:45 AM	0	0	0	0	0	78	43	121	57	0	291	348	49	53	0	102	571
Total	0	0	0	0	0	259	144	403	184	0	1072	1256	210	187	0	397	2056
08:00 AM	0	0	0	0	0	59	46	105	38	0	225	263	57	55	0	112	480
08:15 AM	0	0	0	0	0	88	53	141	26	0	194	220	36	52	0	88	449
08:30 AM	0	0	0	0	0	87	51	138	23	1	204	228	39	41	0	80	446
08:45 AM	0	0	0	0	0	76	29	105	21	0	173	194	33	38	0	71	370
Total	0	0	0	0	0	310	179	489	108	1	796	905	165	186	0	351	1745
Grand Total	0	0	0	0	0	569	323	892	292	1	1868	2161	375	373	0	748	3801
Apprch %	0	0	0		0	63.8	36.2		13.5	0	86.4		50.1	49.9	0		
Total %	0	0	0	0	0	15	8.5	23.5	7.7	0	49.1	56.9	9.9	9.8	0	19.7	

	I-215 Northbound On Ramp Southbound				2nd Street Westbound				I-215 Northbound Off Ramp Northbound				2nd Street Eastbound				
Start Time	Left	Thru	Right	App. Total	Left	Thru	Right	App. Total	Left	Thru	Right	App. Total	Left	Thru	Right	App. Total	Int. Total
Peak Hour Analysis From 07:00 AM to 08:45 AM - Peak 1 of 1																	
Peak Hour for Entire Intersection Begins at 07:15 AM																	
07:15 AM	0	0	0	0	0	60	42	102	49	0	**317**	**366**	55	51	0	106	**574**
07:30 AM	0	0	0	0	0	74	39	113	36	0	242	278	**68**	36	0	104	495
07:45 AM	0	0	0	0	0	**78**	43	**121**	**57**	0	291	348	49	53	0	102	571
08:00 AM	0	0	0	0	0	59	**46**	105	38	0	225	263	57	**55**	0	**112**	480
Total Volume	0	0	0	0	0	271	170	441	180	0	1075	1255	229	195	0	424	2120
% App. Total	0	0	0		0	61.5	38.5		14.3	0	85.7		54	46	0		
PHF	.000	.000	.000	.000	.000	.869	.924	.911	.789	.000	.848	.857	.842	.886	.000	.946	.923

Counts Unlimited Inc.
25286 Jaclyn Avenue
Moreno Valley, CA 92557
(951) 485-7934

City of San Bernardino
N/S: I-215 Northbound Ramps
E/W: 2nd Street
Weather: Sunny

File Name : SBC215N2AM
Site Code : 9268135
Start Date : 10/21/2009
Page No : 2

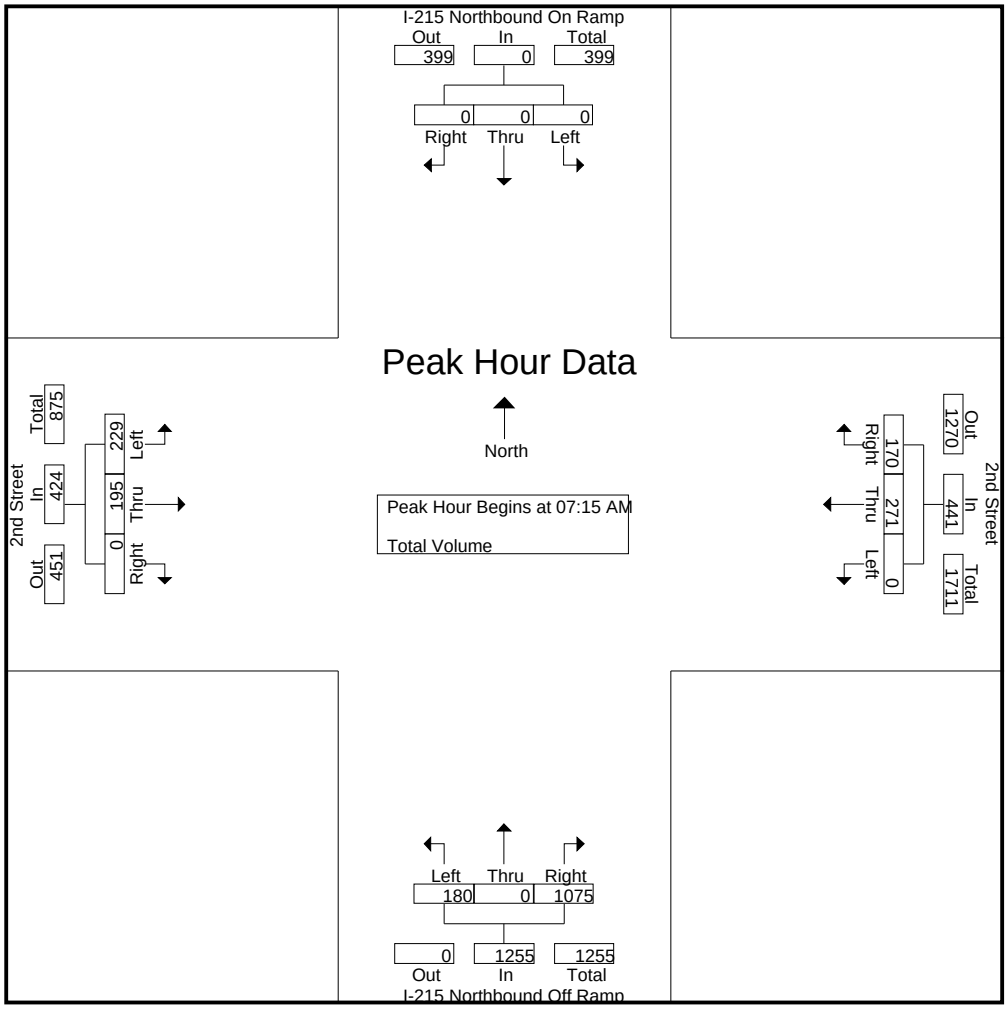

Peak Hour Analysis From 07:00 AM to 08:45 AM - Peak 1 of 1

Peak Hour for Each Approach Begins at:

	07:00 AM				07:45 AM				07:00 AM				07:15 AM			
+0 mins.	0	0	0	0	0	78	43	121	42	0	222	264	55	51	0	106
+15 mins.	0	0	0	0	0	59	46	105	49	0	**317**	**366**	**68**	36	0	104
+30 mins.	0	0	0	0	0	**88**	**53**	**141**	36	0	242	278	49	53	0	102
+45 mins.	0	0	0	0	0	87	51	138	**57**	0	291	348	57	**55**	0	**112**
Total Volume	0	0	0	0	0	312	193	505	184	0	1072	1256	229	195	0	424
% App. Total	0	0	0		0	61.8	38.2		14.6	0	85.4		54	46	0	
PHF	.000	.000	.000	.000	.000	.886	.910	.895	.807	.000	.845	.858	.842	.886	.000	.946

Counts Unlimited Inc.
25286 Jaclyn Avenue
Moreno Valley, CA 92557
(951) 485-7934

City of San Bernardino
N/S: I-215 Northbound Ramps
E/W: 2nd Street
Weather: Sunny

File Name : SBC215N2PM
Site Code : 9268135
Start Date : 10/21/2009
Page No : 1

Groups Printed- Total Volume

	I-215 Northbound On Ramp Southbound				2nd Street Westbound				I-210 Northbound Off Ramp Northbound				2nd Street Eastbound				
Start Time	Left	Thru	Right	App. Total	Left	Thru	Right	App. Total	Left	Thru	Right	App. Total	Left	Thru	Right	App. Total	Int. Total
04:00 PM	0	0	0	0	0	168	113	281	33	0	97	130	79	50	0	129	540
04:15 PM	0	0	0	0	0	163	99	262	27	0	66	93	67	43	0	110	465
04:30 PM	0	0	0	0	0	222	128	350	32	0	76	108	62	48	0	110	568
04:45 PM	0	0	0	0	0	199	125	324	27	1	69	97	58	45	0	103	524
Total	0	0	0	0	0	752	465	1217	119	1	308	428	266	186	0	452	2097
05:00 PM	0	0	0	0	0	241	114	355	30	0	52	82	60	51	0	111	548
05:15 PM	0	0	0	0	0	222	134	356	36	0	61	97	74	49	0	123	576
05:30 PM	0	0	0	0	0	233	137	370	25	0	42	67	63	57	0	120	557
05:45 PM	0	0	0	0	0	160	106	266	38	0	44	82	78	51	0	129	477
Total	0	0	0	0	0	856	491	1347	129	0	199	328	275	208	0	483	2158
Grand Total	0	0	0	0	0	1608	956	2564	248	1	507	756	541	394	0	935	4255
Apprch %	0	0	0		0	62.7	37.3		32.8	0.1	67.1		57.9	42.1	0		
Total %	0	0	0	0	0	37.8	22.5	60.3	5.8	0	11.9	17.8	12.7	9.3	0	22	

	I-215 Northbound On Ramp Southbound				2nd Street Westbound				I-210 Northbound Off Ramp Northbound				2nd Street Eastbound				
Start Time	Left	Thru	Right	App. Total	Left	Thru	Right	App. Total	Left	Thru	Right	App. Total	Left	Thru	Right	App. Total	Int. Total
Peak Hour Analysis From 04:00 PM to 05:45 PM - Peak 1 of 1																	
Peak Hour for Entire Intersection Begins at 04:30 PM																	
04:30 PM	0	0	0	0	0	222	128	350	32	0	**76**	**108**	62	48	0	110	568
04:45 PM	0	0	0	0	0	199	125	324	27	**1**	69	97	58	45	0	103	524
05:00 PM	0	0	0	0	0	**241**	114	355	30	0	52	82	60	**51**	0	111	548
05:15 PM	0	0	0	0	0	222	**134**	**356**	**36**	0	61	97	**74**	49	0	**123**	**576**
Total Volume	0	0	0	0	0	884	501	1385	125	1	258	384	254	193	0	447	2216
% App. Total	0	0	0		0	63.8	36.2		32.6	0.3	67.2		56.8	43.2	0		
PHF	.000	.000	.000	.000	.000	.917	.935	.973	.868	.250	.849	.889	.858	.946	.000	.909	.962

Counts Unlimited Inc.
25286 Jaclyn Avenue
Moreno Valley, CA 92557
(951) 485-7934

City of San Bernardino
N/S: I-215 Northbound Ramps
E/W: 2nd Street
Weather: Sunny

File Name : SBC215N2PM
Site Code : 9268135
Start Date : 10/21/2009
Page No : 2

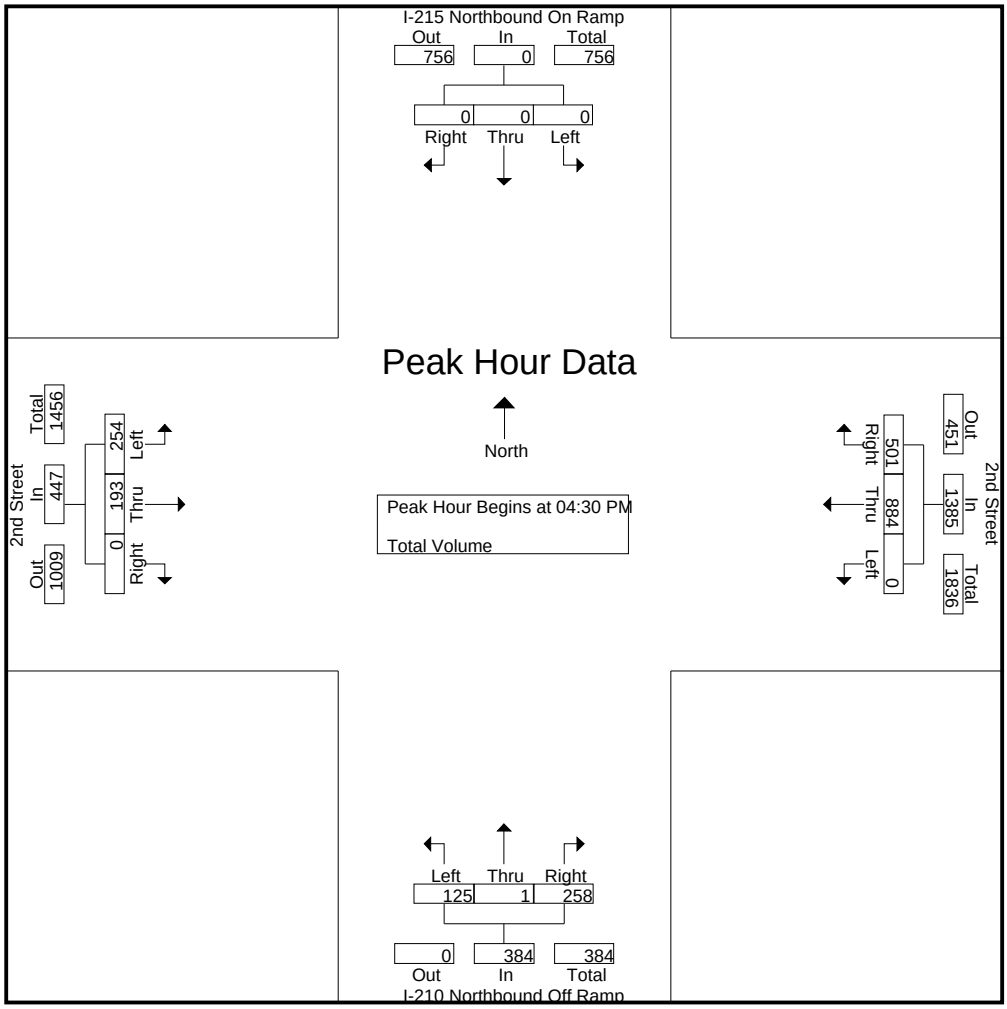

Peak Hour Analysis From 04:00 PM to 05:45 PM - Peak 1 of 1

Peak Hour for Each Approach Begins at:

	04:00 PM				04:45 PM				04:00 PM				05:00 PM			
+0 mins.	0	0	0	0	0	199	125	324	**33**	0	**97**	**130**	60	51	0	111
+15 mins.	0	0	0	0	0	**241**	114	355	27	0	66	93	74	49	0	123
+30 mins.	0	0	0	0	0	222	134	356	32	0	76	108	63	**57**	0	120
+45 mins.	0	0	0	0	0	233	**137**	**370**	27	**1**	69	97	**78**	51	0	**129**
Total Volume	0	0	0	0	0	895	510	1405	119	1	308	428	275	208	0	483
% App. Total	0	0	0		0	63.7	36.3		27.8	0.2	72		56.9	43.1	0	
PHF	.000	.000	.000	.000	.000	.928	.931	.949	.902	.250	.794	.823	.881	.912	.000	.936

Counts Unlimited Inc.
25286 Jaclyn Avenue
Moreno Valley, CA 92557
(951) 485-7934

City of San Bernardino
N/S: "H" Street - "G" Street
E/W: 3rd Street
Weather: Sunny

File Name : SBCHG3AM
Site Code : 9268063
Start Date : 10/21/2009
Page No : 1

Groups Printed- Passenger Vehicles - Large 2 Axle Vehicles - 3 Axle Vehicles - 4+ Axle Trucks

	"H" Street Southbound				3rd Street Westbound				"G" Street Northbound				3rd Street Eastbound				
Start Time	Left	Thru	Right	App. Total	Left	Thru	Right	App. Total	Left	Thru	Right	App. Total	Left	Thru	Right	App. Total	Int. Total
07:00 AM	0	18	3	21	5	6	1	12	1	15	5	21	4	34	13	51	105
07:15 AM	1	23	7	31	5	7	1	13	0	15	15	30	6	27	17	50	124
07:30 AM	1	45	12	58	10	7	0	17	0	20	15	35	5	23	16	44	154
07:45 AM	1	66	7	74	12	8	3	23	0	21	22	43	8	29	21	58	198
Total	3	152	29	184	32	28	5	65	1	71	57	129	23	113	67	203	581
08:00 AM	5	35	14	54	9	13	4	26	0	17	16	33	9	33	14	56	169
08:15 AM	6	24	3	33	14	4	0	18	0	16	7	23	6	18	15	39	113
08:30 AM	1	33	5	39	16	7	5	28	2	24	7	33	4	17	11	32	132
08:45 AM	4	25	2	31	7	8	3	18	4	25	9	38	5	25	15	45	132
Total	16	117	24	157	46	32	12	90	6	82	39	127	24	93	55	172	546
Grand Total	19	269	53	341	78	60	17	155	7	153	96	256	47	206	122	375	1127
Apprch %	5.6	78.9	15.5		50.3	38.7	11		2.7	59.8	37.5		12.5	54.9	32.5		
Total %	1.7	23.9	4.7	30.3	6.9	5.3	1.5	13.8	0.6	13.6	8.5	22.7	4.2	18.3	10.8	33.3	
Passenger Vehicles	15	258	44	317	64	57	17	138	7	139	91	237	40	198	110	348	1040
% Passenger Vehicles	78.9	95.9	83	93	82.1	95	100	89	100	90.8	94.8	92.6	85.1	96.1	90.2	92.8	92.3
Large 2 Axle Vehicles	3	6	7	16	12	3	0	15	0	12	5	17	6	7	11	24	72
% Large 2 Axle Vehicles	15.8	2.2	13.2	4.7	15.4	5	0	9.7	0	7.8	5.2	6.6	12.8	3.4	9	6.4	6.4
3 Axle Vehicles	0	1	1	2	0	0	0	0	0	0	0	0	1	0	0	1	3
% 3 Axle Vehicles	0	0.4	1.9	0.6	0	0	0	0	0	0	0	0	2.1	0	0	0.3	0.3
4+ Axle Trucks	1	4	1	6	2	0	0	2	0	2	0	2	0	1	1	2	12
% 4+ Axle Trucks	5.3	1.5	1.9	1.8	2.6	0	0	1.3	0	1.3	0	0.8	0	0.5	0.8	0.5	1.1

	"H" Street Southbound				3rd Street Westbound				"G" Street Northbound				3rd Street Eastbound				
Start Time	Left	Thru	Right	App. Total	Left	Thru	Right	App. Total	Left	Thru	Right	App. Total	Left	Thru	Right	App. Total	Int. Total
Peak Hour Analysis From 07:15 AM to 08:00 AM - Peak 1 of 1																	
Peak Hour for Entire Intersection Begins at 07:15 AM																	
07:15 AM	1	23	7	31	5	7	1	13	0	15	15	30	6	27	17	50	124
07:30 AM	1	45	12	58	10	7	0	17	0	20	15	35	5	23	16	44	154
07:45 AM	1	**66**	7	**74**	**12**	8	3	23	0	**21**	**22**	**43**	8	29	**21**	**58**	**198**
08:00 AM	**5**	35	**14**	54	9	**13**	**4**	**26**	0	17	16	33	**9**	**33**	14	56	169
Total Volume	8	169	40	217	36	35	8	79	0	73	68	141	28	112	68	208	645
% App. Total	3.7	77.9	18.4		45.6	44.3	10.1		0	51.8	48.2		13.5	53.8	32.7		
PHF	.400	.640	.714	.733	.750	.673	.500	.760	.000	.869	.773	.820	.778	.848	.810	.897	.814

Counts Unlimited Inc.
25286 Jaclyn Avenue
Moreno Valley, CA 92557
(951) 485-7934

City of San Bernardino
N/S: "H" Street - "G" Street
E/W: 3rd Street
Weather: Sunny

File Name : SBCHG3AM
Site Code : 9268063
Start Date : 10/21/2009
Page No : 2

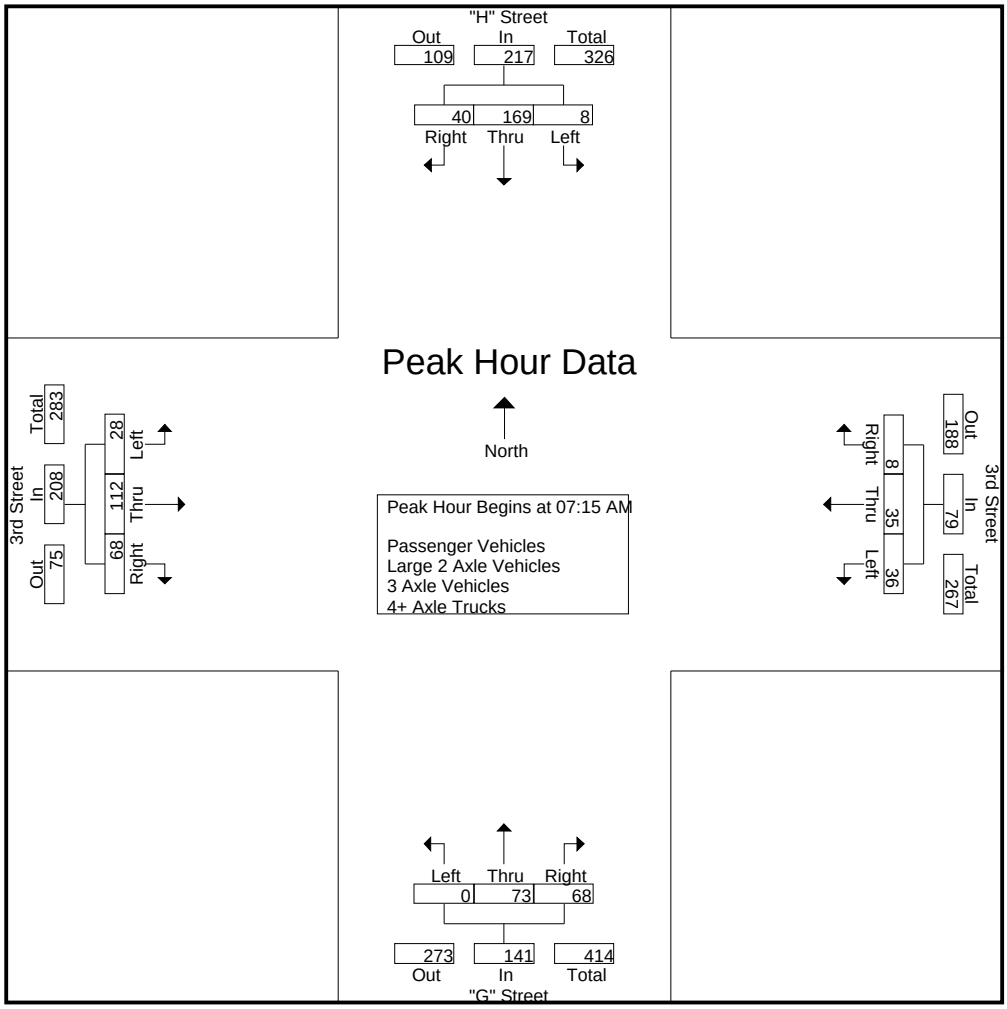

Peak Hour Analysis From 07:15 AM to 08:00 AM - Peak 1 of 1

Peak Hour for Each Approach Begins at:

	07:15 AM				07:15 AM				07:15 AM				07:15 AM			
+0 mins.	1	23	7	31	5	7	1	13	0	15	15	30	6	27	17	50
+15 mins.	1	45	12	58	10	7	0	17	0	20	15	35	5	23	16	44
+30 mins.	1	**66**	7	**74**	**12**	8	3	23	0	**21**	**22**	**43**	8	29	**21**	**58**
+45 mins.	**5**	35	**14**	54	9	**13**	**4**	**26**	0	17	16	33	**9**	**33**	14	56
Total Volume	8	169	40	217	36	35	8	79	0	73	68	141	28	112	68	208
% App. Total	3.7	77.9	18.4		45.6	44.3	10.1		0	51.8	48.2		13.5	53.8	32.7	
PHF	.400	.640	.714	.733	.750	.673	.500	.760	.000	.869	.773	.820	.778	.848	.810	.897

Counts Unlimited Inc.
25286 Jaclyn Avenue
Moreno Valley, CA 92557
(951) 485-7934

City of San Bernardino
N/S: "H" Street - "G" Street
E/W: 3rd Street
Weather: Sunny

File Name : SBCHG3AM
Site Code : 9268063
Start Date : 10/21/2009
Page No : 1

Groups Printed- Passenger Vehicles

	"H" Street Southbound				3rd Street Westbound				"G" Street Northbound				3rd Street Eastbound				
Start Time	Left	Thru	Right	App. Total	Left	Thru	Right	App. Total	Left	Thru	Right	App. Total	Left	Thru	Right	App. Total	Int. Total
07:00 AM	0	16	0	16	3	6	1	10	1	12	5	18	4	32	11	47	91
07:15 AM	1	21	4	26	4	6	1	11	0	11	14	25	6	27	16	49	111
07:30 AM	0	44	11	55	8	7	0	15	0	18	15	33	4	20	15	39	142
07:45 AM	1	65	7	73	12	8	3	23	0	19	21	40	7	29	19	55	191
Total	2	146	22	170	27	27	5	59	1	60	55	116	21	108	61	190	535
08:00 AM	4	33	13	50	7	13	4	24	0	16	15	31	7	33	12	52	157
08:15 AM	5	23	2	30	11	4	0	15	0	16	6	22	4	17	12	33	100
08:30 AM	1	32	5	38	13	6	5	24	2	23	7	32	4	16	11	31	125
08:45 AM	3	24	2	29	6	7	3	16	4	24	8	36	4	24	14	42	123
Total	13	112	22	147	37	30	12	79	6	79	36	121	19	90	49	158	505
Grand Total	15	258	44	317	64	57	17	138	7	139	91	237	40	198	110	348	1040
Apprch %	4.7	81.4	13.9		46.4	41.3	12.3		3	58.6	38.4		11.5	56.9	31.6		
Total %	1.4	24.8	4.2	30.5	6.2	5.5	1.6	13.3	0.7	13.4	8.8	22.8	3.8	19	10.6	33.5	

	"H" Street Southbound				3rd Street Westbound				"G" Street Northbound				3rd Street Eastbound				
Start Time	Left	Thru	Right	App. Total	Left	Thru	Right	App. Total	Left	Thru	Right	App. Total	Left	Thru	Right	App. Total	Int. Total
Peak Hour Analysis From 07:15 AM to 08:00 AM - Peak 1 of 1																	
Peak Hour for Entire Intersection Begins at 07:15 AM																	
07:15 AM	1	21	4	26	4	6	1	11	0	11	14	25	6	27	16	49	111
07:30 AM	0	44	11	55	8	7	0	15	0	18	15	33	4	20	15	39	142
07:45 AM	1	**65**	7	**73**	**12**	8	3	23	0	**19**	**21**	**40**	**7**	29	**19**	**55**	**191**
08:00 AM	**4**	33	**13**	50	7	**13**	**4**	**24**	0	16	15	31	7	**33**	12	52	157
Total Volume	6	163	35	204	31	34	8	73	0	64	65	129	24	109	62	195	601
% App. Total	2.9	79.9	17.2		42.5	46.6	11		0	49.6	50.4		12.3	55.9	31.8		
PHF	.375	.627	.673	.699	.646	.654	.500	.760	.000	.842	.774	.806	.857	.826	.816	.886	.787

Counts Unlimited Inc.
25286 Jaclyn Avenue
Moreno Valley, CA 92557
(951) 485-7934

City of San Bernardino
N/S: "H" Street - "G" Street
E/W: 3rd Street
Weather: Sunny

File Name : SBCHG3AM
Site Code : 9268063
Start Date : 10/21/2009
Page No : 2

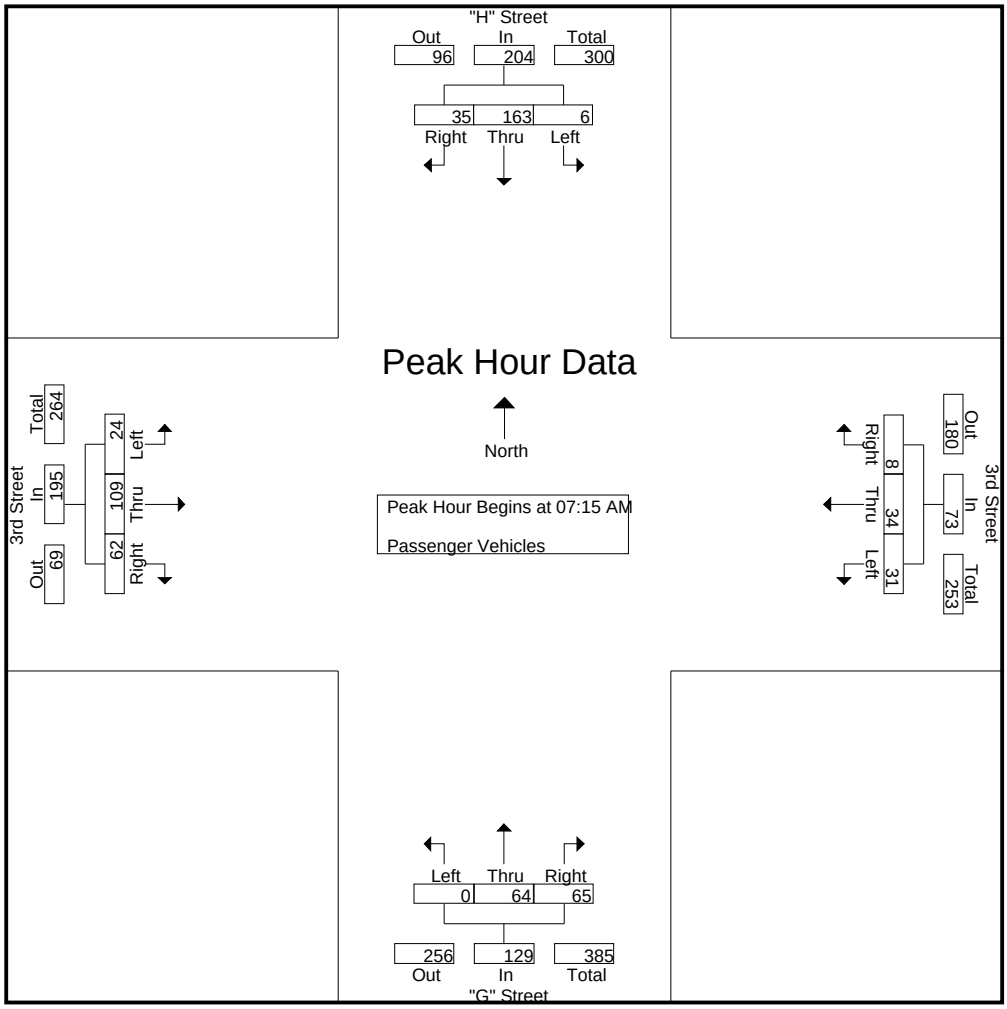

Peak Hour Analysis From 07:15 AM to 08:00 AM - Peak 1 of 1

Peak Hour for Each Approach Begins at:

	07:15 AM				07:15 AM				07:15 AM				07:15 AM			
+0 mins.	1	21	4	26	4	6	1	11	0	11	14	25	6	27	16	49
+15 mins.	0	44	11	55	8	7	0	15	0	18	15	33	4	20	15	39
+30 mins.	1	**65**	7	**73**	**12**	8	3	23	0	**19**	**21**	**40**	**7**	29	**19**	**55**
+45 mins.	**4**	33	**13**	50	7	**13**	**4**	**24**	0	16	15	31	7	**33**	12	52
Total Volume	6	163	35	204	31	34	8	73	0	64	65	129	24	109	62	195
% App. Total	2.9	79.9	17.2		42.5	46.6	11		0	49.6	50.4		12.3	55.9	31.8	
PHF	.375	.627	.673	.699	.646	.654	.500	.760	.000	.842	.774	.806	.857	.826	.816	.886

Counts Unlimited Inc.
25286 Jaclyn Avenue
Moreno Valley, CA 92557
(951) 485-7934

City of San Bernardino
N/S: "H" Street - "G" Street
E/W: 3rd Street
Weather: Sunny

File Name : SBCHG3AM
Site Code : 9268063
Start Date : 10/21/2009
Page No : 1

Groups Printed- Large 2 Axle Vehicles

	"H" Street Southbound				3rd Street Westbound				"G" Street Northbound				3rd Street Eastbound				
Start Time	Left	Thru	Right	App. Total	Left	Thru	Right	App. Total	Left	Thru	Right	App. Total	Left	Thru	Right	App. Total	Int. Total
07:00 AM	0	1	2	3	2	0	0	2	0	1	0	1	0	2	2	4	10
07:15 AM	0	2	3	5	0	1	0	1	0	4	1	5	0	0	1	1	12
07:30 AM	0	0	0	0	2	0	0	2	0	2	0	2	1	2	1	4	8
07:45 AM	0	1	0	1	0	0	0	0	0	2	1	3	0	0	2	2	6
Total	0	4	5	9	4	1	0	5	0	9	2	11	1	4	6	11	36
08:00 AM	1	2	1	4	2	0	0	2	0	1	1	2	2	0	2	4	12
08:15 AM	1	0	1	2	2	0	0	2	0	0	1	1	2	1	2	5	10
08:30 AM	0	0	0	0	3	1	0	4	0	1	0	1	0	1	0	1	6
08:45 AM	1	0	0	1	1	1	0	2	0	1	1	2	1	1	1	3	8
Total	3	2	2	7	8	2	0	10	0	3	3	6	5	3	5	13	36
Grand Total	3	6	7	16	12	3	0	15	0	12	5	17	6	7	11	24	72
Apprch %	18.8	37.5	43.8		80	20	0		0	70.6	29.4		25	29.2	45.8		
Total %	4.2	8.3	9.7	22.2	16.7	4.2	0	20.8	0	16.7	6.9	23.6	8.3	9.7	15.3	33.3	

	"H" Street Southbound				3rd Street Westbound				"G" Street Northbound				3rd Street Eastbound				
Start Time	Left	Thru	Right	App. Total	Left	Thru	Right	App. Total	Left	Thru	Right	App. Total	Left	Thru	Right	App. Total	Int. Total
Peak Hour Analysis From 07:15 AM to 08:00 AM - Peak 1 of 1																	
Peak Hour for Entire Intersection Begins at 07:15 AM																	
07:15 AM	0	**2**	**3**	**5**	0	**1**	0	1	0	**4**	**1**	**5**	0	0	1	1	**12**
07:30 AM	0	0	0	0	**2**	0	0	**2**	0	2	0	2	1	**2**	1	**4**	8
07:45 AM	0	1	0	1	0	0	0	0	0	2	1	3	0	0	**2**	2	6
08:00 AM	**1**	2	1	4	2	0	0	2	0	1	1	2	**2**	0	2	4	12
Total Volume	1	5	4	10	4	1	0	5	0	9	3	12	3	2	6	11	38
% App. Total	10	50	40		80	20	0		0	75	25		27.3	18.2	54.5		
PHF	.250	.625	.333	.500	.500	.250	.000	.625	.000	.563	.750	.600	.375	.250	.750	.688	.792

Counts Unlimited Inc.
25286 Jaclyn Avenue
Moreno Valley, CA 92557
(951) 485-7934

City of San Bernardino
N/S: "H" Street - "G" Street
E/W: 3rd Street
Weather: Sunny

File Name : SBCHG3AM
Site Code : 9268063
Start Date : 10/21/2009
Page No : 2

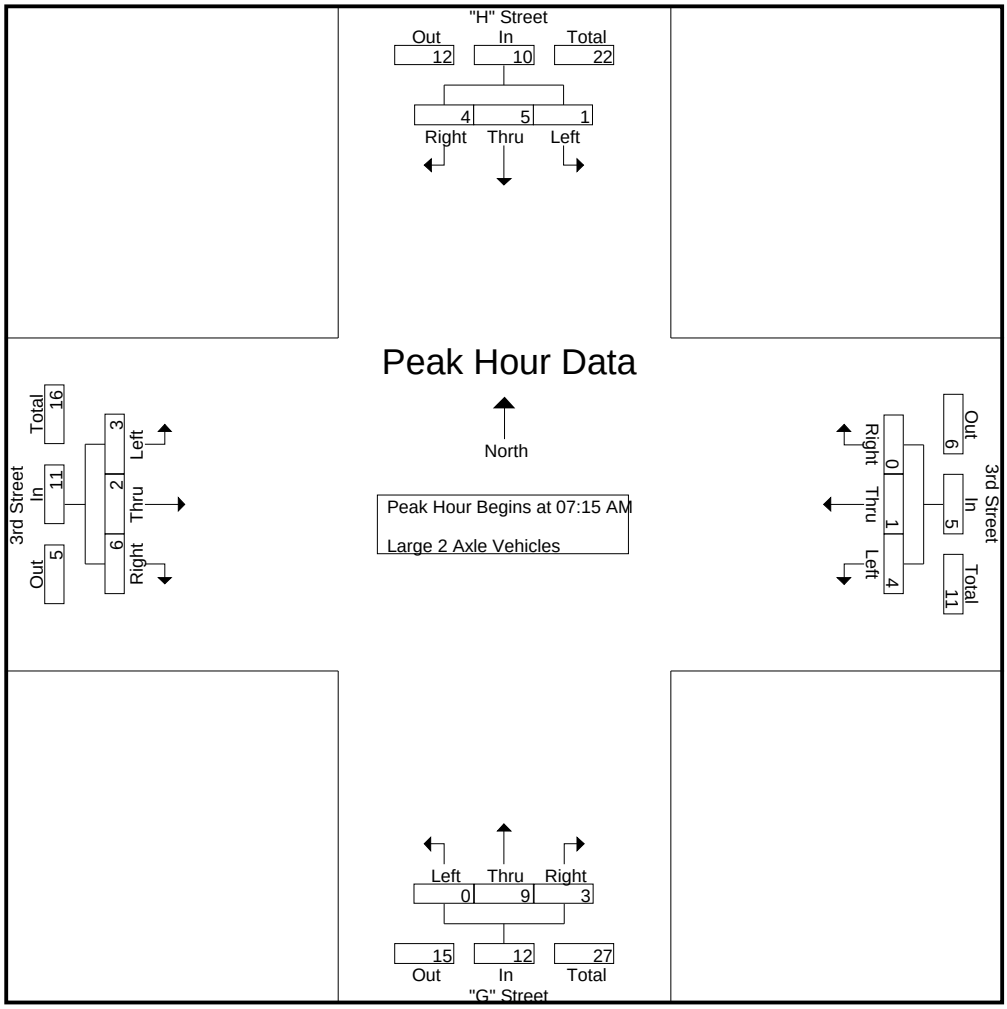

Peak Hour Analysis From 07:15 AM to 08:00 AM - Peak 1 of 1

Peak Hour for Each Approach Begins at:

	07:15 AM				07:15 AM				07:15 AM				07:15 AM			
+0 mins.	0	**2**	**3**	**5**	0	**1**	0	1	0	**4**	**1**	**5**	0	0	1	1
+15 mins.	0	0	0	0	**2**	0	0	**2**	0	2	0	2	1	**2**	1	**4**
+30 mins.	0	1	0	1	0	0	0	0	0	2	1	3	0	0	**2**	2
+45 mins.	**1**	2	1	4	2	0	0	2	0	1	1	2	**2**	0	2	4
Total Volume	1	5	4	10	4	1	0	5	0	9	3	12	3	2	6	11
% App. Total	10	50	40		80	20	0		0	75	25		27.3	18.2	54.5	
PHF	.250	.625	.333	.500	.500	.250	.000	.625	.000	.563	.750	.600	.375	.250	.750	.688

Counts Unlimited Inc.
25286 Jaclyn Avenue
Moreno Valley, CA 92557
(951) 485-7934

City of San Bernardino
N/S: "H" Street - "G" Street
E/W: 3rd Street
Weather: Sunny

File Name : SBCHG3AM
Site Code : 9268063
Start Date : 10/21/2009
Page No : 1

Groups Printed- 3 Axle Vehicles

	"H" Street Southbound				3rd Street Westbound				"G" Street Northbound				3rd Street Eastbound				
Start Time	Left	Thru	Right	App. Total	Left	Thru	Right	App. Total	Left	Thru	Right	App. Total	Left	Thru	Right	App. Total	Int. Total
07:00 AM	0	0	0	0	0	0	0	0	0	0	0	0	0	0	0	0	0
07:15 AM	0	0	0	0	0	0	0	0	0	0	0	0	0	0	0	0	0
07:30 AM	0	1	1	2	0	0	0	0	0	0	0	0	0	0	0	0	2
07:45 AM	0	0	0	0	0	0	0	0	0	0	0	0	1	0	0	1	1
Total	0	1	1	2	0	0	0	0	0	0	0	0	1	0	0	1	3
08:00 AM	0	0	0	0	0	0	0	0	0	0	0	0	0	0	0	0	0
08:15 AM	0	0	0	0	0	0	0	0	0	0	0	0	0	0	0	0	0
08:30 AM	0	0	0	0	0	0	0	0	0	0	0	0	0	0	0	0	0
08:45 AM	0	0	0	0	0	0	0	0	0	0	0	0	0	0	0	0	0
Total	0	0	0	0	0	0	0	0	0	0	0	0	0	0	0	0	0
Grand Total	0	1	1	2	0	0	0	0	0	0	0	0	1	0	0	1	3
Apprch %	0	50	50		0	0	0		0	0	0		100	0	0		
Total %	0	33.3	33.3	66.7	0	0	0	0	0	0	0	0	33.3	0	0	33.3	

	"H" Street Southbound				3rd Street Westbound				"G" Street Northbound				3rd Street Eastbound				
Start Time	Left	Thru	Right	App. Total	Left	Thru	Right	App. Total	Left	Thru	Right	App. Total	Left	Thru	Right	App. Total	Int. Total
Peak Hour Analysis From 07:15 AM to 08:00 AM - Peak 1 of 1																	
Peak Hour for Entire Intersection Begins at 07:15 AM																	
07:15 AM	0	0	0	0	0	0	0	0	0	0	0	0	0	0	0	0	0
07:30 AM	0	**1**	**1**	**2**	0	0	0	0	0	0	0	0	0	0	0	0	**2**
07:45 AM	0	0	0	0	0	0	0	0	0	0	0	0	**1**	0	0	**1**	1
08:00 AM	0	0	0	0	0	0	0	0	0	0	0	0	0	0	0	0	0
Total Volume	0	1	1	2	0	0	0	0	0	0	0	0	1	0	0	1	3
% App. Total	0	50	50		0	0	0		0	0	0		100	0	0		
PHF	.000	.250	.250	.250	.000	.000	.000	.000	.000	.000	.000	.000	.250	.000	.000	.250	.375

Counts Unlimited Inc.
25286 Jaclyn Avenue
Moreno Valley, CA 92557
(951) 485-7934

City of San Bernardino
N/S: "H" Street - "G" Street
E/W: 3rd Street
Weather: Sunny

File Name : SBCHG3AM
Site Code : 9268063
Start Date : 10/21/2009
Page No : 2

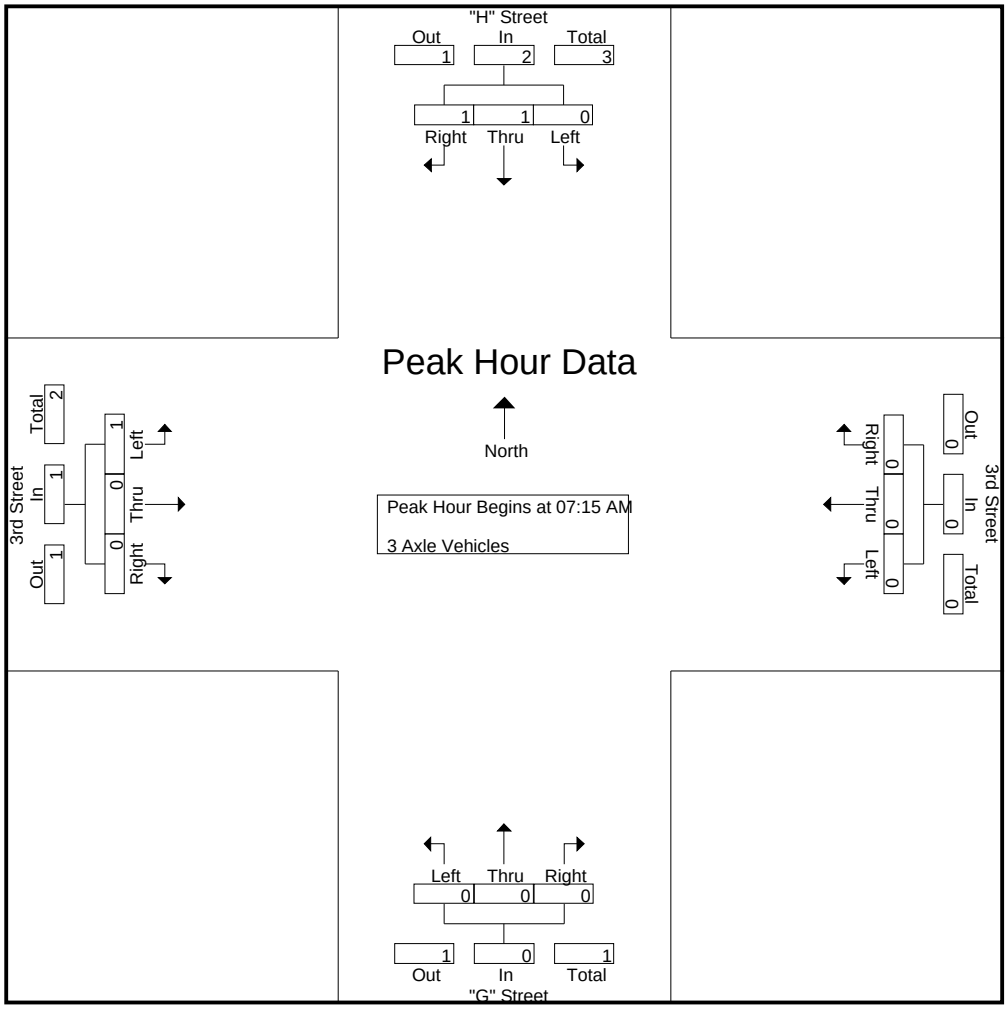

Peak Hour Analysis From 07:15 AM to 08:00 AM - Peak 1 of 1

Peak Hour for Each Approach Begins at:

	07:15 AM				07:15 AM				07:15 AM				07:15 AM			
+0 mins.	0	0	0	0	0	0	0	0	0	0	0	0	0	0	0	0
+15 mins.	0	**1**	**1**	**2**	0	0	0	0	0	0	0	0	0	0	0	0
+30 mins.	0	0	0	0	0	0	0	0	0	0	0	0	**1**	0	0	**1**
+45 mins.	0	0	0	0	0	0	0	0	0	0	0	0	0	0	0	0
Total Volume	0	1	1	2	0	0	0	0	0	0	0	0	1	0	0	1
% App. Total	0	50	50		0	0	0		0	0	0		100	0	0	
PHF	.000	.250	.250	.250	.000	.000	.000	.000	.000	.000	.000	.000	.250	.000	.000	.250

Counts Unlimited Inc.
25286 Jaclyn Avenue
Moreno Valley, CA 92557
(951) 485-7934

City of San Bernardino
N/S: "H" Street - "G" Street
E/W: 3rd Street
Weather: Sunny

File Name : SBCHG3AM
Site Code : 9268063
Start Date : 10/21/2009
Page No : 1

Groups Printed- 4+ Axle Trucks

	"H" Street Southbound				3rd Street Westbound				"G" Street Northbound				3rd Street Eastbound				
Start Time	Left	Thru	Right	App. Total	Left	Thru	Right	App. Total	Left	Thru	Right	App. Total	Left	Thru	Right	App. Total	Int. Total
07:00 AM	0	1	1	2	0	0	0	0	0	2	0	2	0	0	0	0	4
07:15 AM	0	0	0	0	1	0	0	1	0	0	0	0	0	0	0	0	1
07:30 AM	1	0	0	1	0	0	0	0	0	0	0	0	0	1	0	1	2
07:45 AM	0	0	0	0	0	0	0	0	0	0	0	0	0	0	0	0	0
Total	1	1	1	3	1	0	0	1	0	2	0	2	0	1	0	1	7
08:00 AM	0	0	0	0	0	0	0	0	0	0	0	0	0	0	0	0	0
08:15 AM	0	1	0	1	1	0	0	1	0	0	0	0	0	0	1	1	3
08:30 AM	0	1	0	1	0	0	0	0	0	0	0	0	0	0	0	0	1
08:45 AM	0	1	0	1	0	0	0	0	0	0	0	0	0	0	0	0	1
Total	0	3	0	3	1	0	0	1	0	0	0	0	0	0	1	1	5
Grand Total	1	4	1	6	2	0	0	2	0	2	0	2	0	1	1	2	12
Apprch %	16.7	66.7	16.7		100	0	0		0	100	0		0	50	50		
Total %	8.3	33.3	8.3	50	16.7	0	0	16.7	0	16.7	0	16.7	0	8.3	8.3	16.7	

	"H" Street Southbound				3rd Street Westbound				"G" Street Northbound				3rd Street Eastbound				
Start Time	Left	Thru	Right	App. Total	Left	Thru	Right	App. Total	Left	Thru	Right	App. Total	Left	Thru	Right	App. Total	Int. Total
Peak Hour Analysis From 07:15 AM to 08:00 AM - Peak 1 of 1																	
Peak Hour for Entire Intersection Begins at 07:15 AM																	
07:15 AM	0	0	0	0	**1**	0	0	**1**	0	0	0	0	0	0	0	0	1
07:30 AM	**1**	0	0	**1**	0	0	0	0	0	0	0	0	0	**1**	0	**1**	**2**
07:45 AM	0	0	0	0	0	0	0	0	0	0	0	0	0	0	0	0	0
08:00 AM	0	0	0	0	0	0	0	0	0	0	0	0	0	0	0	0	0
Total Volume	1	0	0	1	1	0	0	1	0	0	0	0	0	1	0	1	3
% App. Total	100	0	0		100	0	0		0	0	0		0	100	0		
PHF	.250	.000	.000	.250	.250	.000	.000	.250	.000	.000	.000	.000	.000	.250	.000	.250	.375

Counts Unlimited Inc.
25286 Jaclyn Avenue
Moreno Valley, CA 92557
(951) 485-7934

City of San Bernardino
N/S: "H" Street - "G" Street
E/W: 3rd Street
Weather: Sunny

File Name : SBCHG3AM
Site Code : 9268063
Start Date : 10/21/2009
Page No : 2

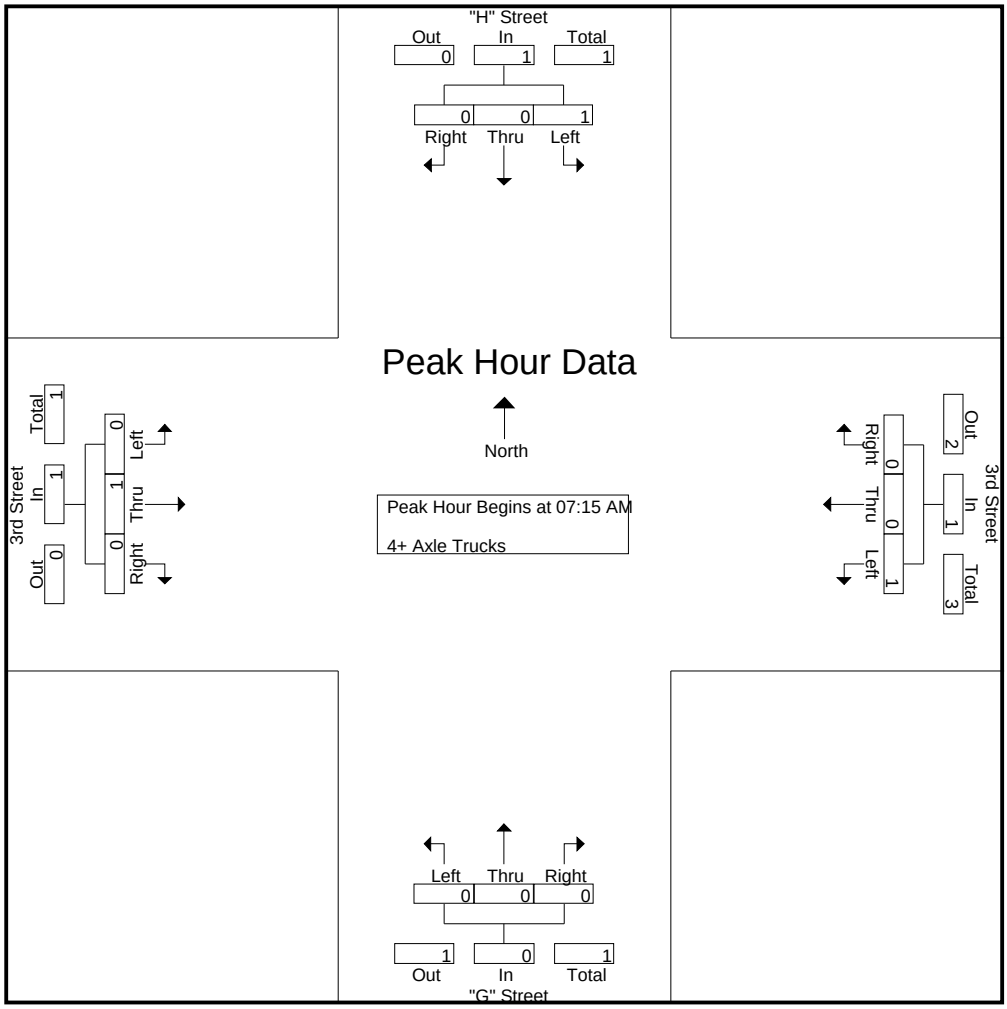

Peak Hour Analysis From 07:15 AM to 08:00 AM - Peak 1 of 1

Peak Hour for Each Approach Begins at:

	07:15 AM				07:15 AM				07:15 AM				07:15 AM			
+0 mins.	0	0	0	0	**1**	0	0	**1**	0	0	0	0	0	0	0	0
+15 mins.	**1**	0	0	**1**	0	0	0	0	0	0	0	0	0	**1**	0	**1**
+30 mins.	0	0	0	0	0	0	0	0	0	0	0	0	0	0	0	0
+45 mins.	0	0	0	0	0	0	0	0	0	0	0	0	0	0	0	0
Total Volume	1	0	0	1	1	0	0	1	0	0	0	0	0	1	0	1
% App. Total	100	0	0		100	0	0		0	0	0		0	100	0	
PHF	.250	.000	.000	.250	.250	.000	.000	.250	.000	.000	.000	.000	.000	.250	.000	.250

Counts Unlimited Inc.
25286 Jaclyn Avenue
Moreno Valley, CA 92557
(951) 485-7934

City of San Bernardino
N/S: "H" Street - "G" Street
E/W: 3rd Street
Weather: Sunny

File Name : 0631020PM
Site Code : 9268063
Start Date : 10/20/2009
Page No : 1

Groups Printed- Passanger Vehicle - Large 2 Axle Vehicles - 3 Axle Vehicles - 4+ Axle Trucks

	"H" Street Southbound				3rd Street Westbound				"G" Street Northbound				3rd Street Eastbound				
Start Time	Left	Thru	Right	App. Total	Left	Thru	Right	App. Total	Left	Thru	Right	App. Total	Left	Thru	Right	App. Total	Int. Total
04:00 PM	3	43	8	54	22	19	2	43	0	57	13	70	9	23	13	45	212
04:15 PM	1	35	5	41	14	17	3	34	3	58	13	74	13	15	4	32	181
04:30 PM	2	36	4	42	20	15	0	35	2	74	13	89	13	15	9	37	203
04:45 PM	3	40	3	46	16	19	4	39	3	61	10	74	23	28	11	62	221
Total	9	154	20	183	72	70	9	151	8	250	49	307	58	81	37	176	817
05:00 PM	3	33	8	44	21	16	3	40	2	89	18	109	8	16	11	35	228
05:15 PM	2	41	4	47	15	14	6	35	4	76	16	96	20	16	7	43	221
05:30 PM	1	28	3	32	20	15	6	41	5	63	11	79	12	13	7	32	184
05:45 PM	2	32	4	38	15	17	4	36	3	54	11	68	44	24	11	79	221
Total	8	134	19	161	71	62	19	152	14	282	56	352	84	69	36	189	854
Grand Total	17	288	39	344	143	132	28	303	22	532	105	659	142	150	73	365	1671
Apprch %	4.9	83.7	11.3		47.2	43.6	9.2		3.3	80.7	15.9		38.9	41.1	20		
Total %	1	17.2	2.3	20.6	8.6	7.9	1.7	18.1	1.3	31.8	6.3	39.4	8.5	9	4.4	21.8	
Passanger Vehicle	16	283	35	334	133	127	28	288	19	512	99	630	135	142	62	339	1591
% Passanger Vehicle																	
Large 2 Axle Vehicles	0	3	3	6	9	3	0	12	1	6	6	13	5	4	10	19	50
% Large 2 Axle Vehicles	0	1	7.7	1.7	6.3	2.3	0	4	4.5	1.1	5.7	2	3.5	2.7	13.7	5.2	3
3 Axle Vehicles	1	1	1	3	1	2	0	3	1	7	0	8	2	0	0	2	16
% 3 Axle Vehicles	5.9	0.3	2.6	0.9	0.7	1.5	0	1	4.5	1.3	0	1.2	1.4	0	0	0.5	1
4+ Axle Trucks	0	1	0	1	0	0	0	0	1	7	0	8	0	4	1	5	14
% 4+ Axle Trucks	0	0.3	0	0.3	0	0	0	0	4.5	1.3	0	1.2	0	2.7	1.4	1.4	0.8

	"H" Street Southbound				3rd Street Westbound				"G" Street Northbound				3rd Street Eastbound				
Start Time	Left	Thru	Right	App. Total	Left	Thru	Right	App. Total	Left	Thru	Right	App. Total	Left	Thru	Right	App. Total	Int. Total
Peak Hour Analysis From 04:30 PM to 05:15 PM - Peak 1 of 1																	
Peak Hour for Entire Intersection Begins at 04:30 PM																	
04:30 PM	2	36	4	42	20	15	0	35	2	74	13	89	13	15	9	37	203
04:45 PM	**3**	40	3	46	16	**19**	4	39	3	61	10	74	**23**	**28**	**11**	**62**	221
05:00 PM	3	33	**8**	44	**21**	16	3	**40**	2	**89**	**18**	**109**	8	16	11	35	**228**
05:15 PM	2	**41**	4	**47**	15	14	**6**	35	**4**	76	16	96	20	16	7	43	221
Total Volume	10	150	19	179	72	64	13	149	11	300	57	368	64	75	38	177	873
% App. Total	5.6	83.8	10.6		48.3	43	8.7		3	81.5	15.5		36.2	42.4	21.5		
PHF	.833	.915	.594	.952	.857	.842	.542	.931	.688	.843	.792	.844	.696	.670	.864	.714	.957

Counts Unlimited Inc.
25286 Jaclyn Avenue
Moreno Valley, CA 92557
(951) 485-7934

City of San Bernardino
N/S: "H" Street - "G" Street
E/W: 3rd Street
Weather: Sunny

File Name : 0631020PM
Site Code : 9268063
Start Date : 10/20/2009
Page No : 2

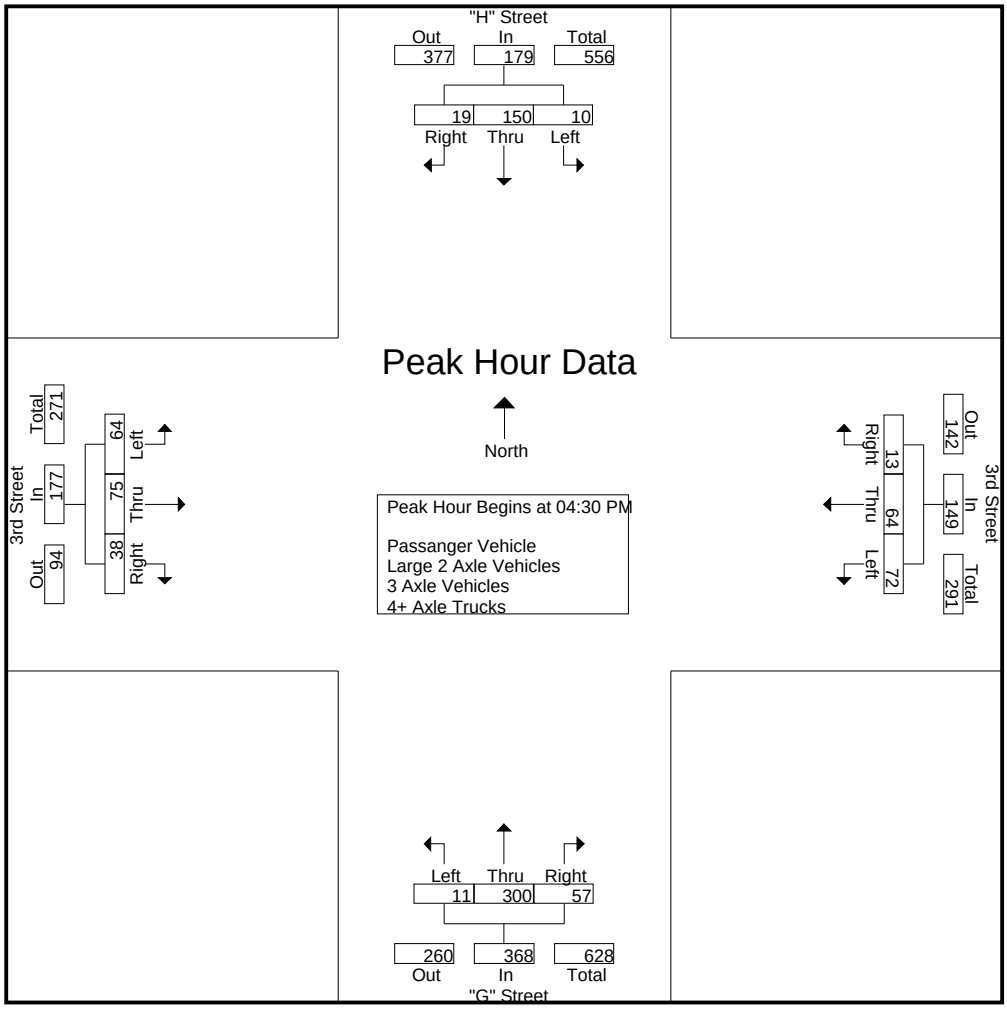

Peak Hour Analysis From 04:30 PM to 05:15 PM - Peak 1 of 1

Peak Hour for Each Approach Begins at:

	04:30 PM				04:30 PM				04:30 PM				04:30 PM			
+0 mins.	2	36	4	42	20	15	0	35	2	74	13	89	13	15	9	37
+15 mins.	**3**	40	3	46	16	**19**	4	39	3	61	10	74	**23**	**28**	**11**	**62**
+30 mins.	3	33	**8**	44	**21**	16	3	**40**	2	**89**	**18**	**109**	8	16	11	35
+45 mins.	2	**41**	4	**47**	15	14	**6**	35	**4**	76	16	96	20	16	7	43
Total Volume	10	150	19	179	72	64	13	149	11	300	57	368	64	75	38	177
% App. Total	5.6	83.8	10.6		48.3	43	8.7		3	81.5	15.5		36.2	42.4	21.5	
PHF	.833	.915	.594	.952	.857	.842	.542	.931	.688	.843	.792	.844	.696	.670	.864	.714

Counts Unlimited Inc.
25286 Jaclyn Avenue
Moreno Valley, CA 92557
(951) 485-7934

City of San Bernardino
N/S: "H" Street - "G" Street
E/W: 3rd Street
Weather: Sunny

File Name : 0631020PM
Site Code : 9268063
Start Date : 10/20/2009
Page No : 1

Groups Printed- Passanger Vehicle

	"H" Street Southbound				3rd Street Westbound				"G" Street Northbound				3rd Street Eastbound				
Start Time	Left	Thru	Right	App. Total	Left	Thru	Right	App. Total	Left	Thru	Right	App. Total	Left	Thru	Right	App. Total	Int. Total
04:00 PM	3	43	6	52	20	18	2	40	0	55	12	67	9	23	11	43	202
04:15 PM	1	34	5	40	13	16	3	32	3	54	12	69	12	15	3	30	171
04:30 PM	2	34	4	40	19	15	0	34	1	72	13	86	12	14	7	33	193
04:45 PM	3	40	2	45	16	19	4	39	3	60	10	73	20	25	9	54	211
Total	9	151	17	177	68	68	9	145	7	241	47	295	53	77	30	160	777
05:00 PM	3	32	8	43	17	16	3	36	1	86	17	104	8	16	10	34	217
05:15 PM	1	41	3	45	15	14	6	35	3	74	15	92	19	14	5	38	210
05:30 PM	1	28	3	32	18	14	6	38	5	60	11	76	12	12	6	30	176
05:45 PM	2	31	4	37	15	15	4	34	3	51	9	63	43	23	11	77	211
Total	7	132	18	157	65	59	19	143	12	271	52	335	82	65	32	179	814
Grand Total	16	283	35	334	133	127	28	288	19	512	99	630	135	142	62	339	1591
Apprch %	4.8	84.7	10.5		46.2	44.1	9.7		3	81.3	15.7		39.8	41.9	18.3		
Total %	1	17.8	2.2	21	8.4	8	1.8	18.1	1.2	32.2	6.2	39.6	8.5	8.9	3.9	21.3	

	"H" Street Southbound				3rd Street Westbound				"G" Street Northbound				3rd Street Eastbound				
Start Time	Left	Thru	Right	App. Total	Left	Thru	Right	App. Total	Left	Thru	Right	App. Total	Left	Thru	Right	App. Total	Int. Total
Peak Hour Analysis From 04:30 PM to 05:15 PM - Peak 1 of 1																	
Peak Hour for Entire Intersection Begins at 04:30 PM																	
04:30 PM	2	34	4	40	**19**	15	0	34	1	72	13	86	12	14	7	33	193
04:45 PM	**3**	40	2	**45**	16	**19**	4	**39**	**3**	60	10	73	**20**	**25**	9	**54**	211
05:00 PM	3	32	**8**	43	17	16	3	36	1	**86**	**17**	**104**	8	16	**10**	34	**217**
05:15 PM	1	**41**	3	45	15	14	**6**	35	3	74	15	92	19	14	5	38	210
Total Volume	9	147	17	173	67	64	13	144	8	292	55	355	59	69	31	159	831
% App. Total	5.2	85	9.8		46.5	44.4	9		2.3	82.3	15.5		37.1	43.4	19.5		
PHF	.750	.896	.531	.961	.882	.842	.542	.923	.667	.849	.809	.853	.738	.690	.775	.736	.957

Counts Unlimited Inc.
25286 Jaclyn Avenue
Moreno Valley, CA 92557
(951) 485-7934

City of San Bernardino
N/S: "H" Street - "G" Street
E/W: 3rd Street
Weather: Sunny

File Name : 0631020PM
Site Code : 9268063
Start Date : 10/20/2009
Page No : 2

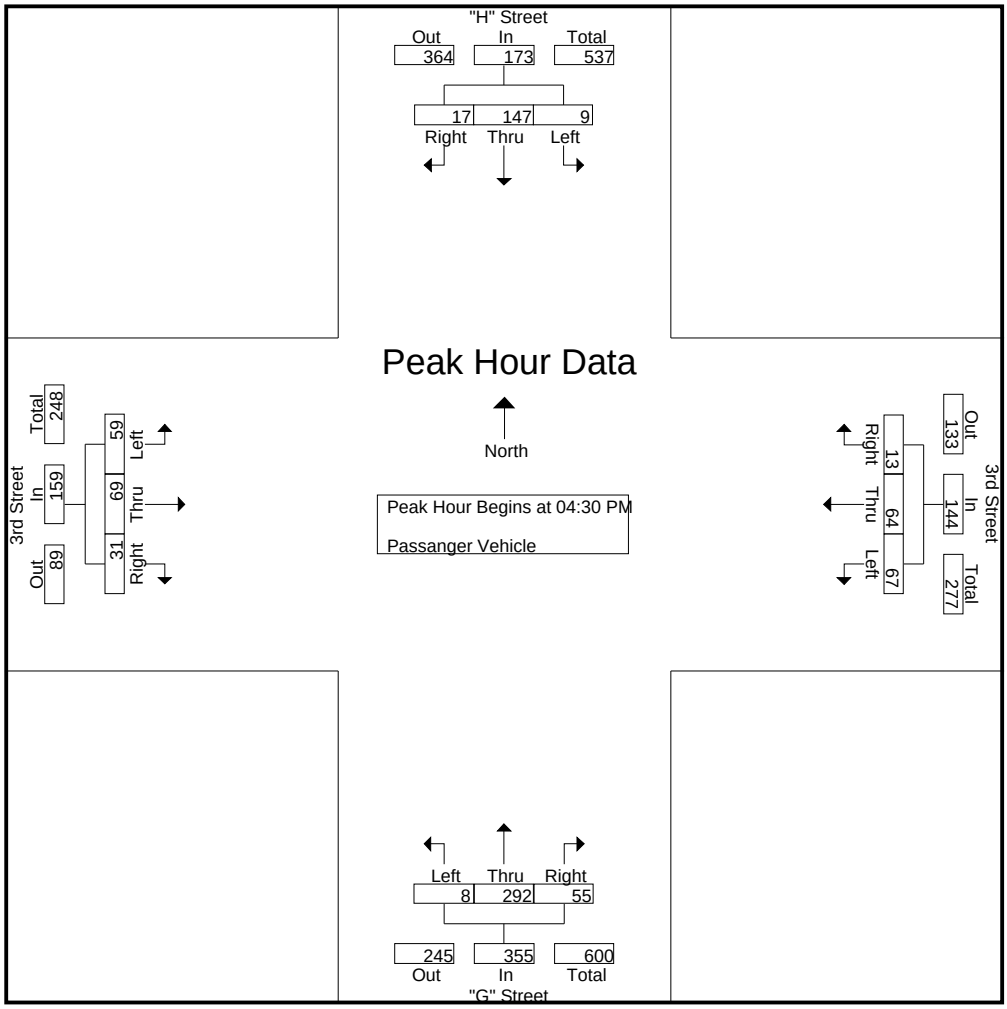

Peak Hour Analysis From 04:30 PM to 05:15 PM - Peak 1 of 1

Peak Hour for Each Approach Begins at:

	04:30 PM				04:30 PM				04:30 PM				04:30 PM			
+0 mins.	2	34	4	40	**19**	15	0	34	1	72	13	86	12	14	7	33
+15 mins.	**3**	40	2	**45**	16	**19**	4	**39**	**3**	60	10	73	**20**	**25**	9	**54**
+30 mins.	3	32	**8**	43	17	16	3	36	1	**86**	**17**	**104**	8	16	**10**	34
+45 mins.	1	**41**	3	45	15	14	**6**	35	3	74	15	92	19	14	5	38
Total Volume	9	147	17	173	67	64	13	144	8	292	55	355	59	69	31	159
% App. Total	5.2	85	9.8		46.5	44.4	9		2.3	82.3	15.5		37.1	43.4	19.5	
PHF	.750	.896	.531	.961	.882	.842	.542	.923	.667	.849	.809	.853	.738	.690	.775	.736

Counts Unlimited Inc.
25286 Jaclyn Avenue
Moreno Valley, CA 92557
(951) 485-7934

City of San Bernardino
N/S: "H" Street - "G" Street
E/W: 3rd Street
Weather: Sunny

File Name : 0631020PM
Site Code : 9268063
Start Date : 10/20/2009
Page No : 1

Groups Printed- Large 2 Axle Vehicles

	"H" Street Southbound				3rd Street Westbound				"G" Street Northbound				3rd Street Eastbound				
Start Time	Left	Thru	Right	App. Total	Left	Thru	Right	App. Total	Left	Thru	Right	App. Total	Left	Thru	Right	App. Total	Int. Total
04:00 PM	0	0	1	1	2	0	0	2	0	1	1	2	0	0	1	1	6
04:15 PM	0	1	0	1	0	1	0	1	0	1	1	2	1	0	1	2	6
04:30 PM	0	2	0	2	1	0	0	1	0	1	0	1	1	0	2	3	7
04:45 PM	0	0	1	1	0	0	0	0	0	0	0	0	2	0	2	4	5
Total	0	3	2	5	3	1	0	4	0	3	2	5	4	0	6	10	24
05:00 PM	0	0	0	0	4	0	0	4	1	1	1	3	0	0	1	1	8
05:15 PM	0	0	1	1	0	0	0	0	0	0	1	1	0	2	2	4	6
05:30 PM	0	0	0	0	2	1	0	3	0	2	0	2	0	1	1	2	7
05:45 PM	0	0	0	0	0	1	0	1	0	0	2	2	1	1	0	2	5
Total	0	0	1	1	6	2	0	8	1	3	4	8	1	4	4	9	26
Grand Total	0	3	3	6	9	3	0	12	1	6	6	13	5	4	10	19	50
Apprch %	0	50	50		75	25	0		7.7	46.2	46.2		26.3	21.1	52.6		
Total %	0	6	6	12	18	6	0	24	2	12	12	26	10	8	20	38	

	"H" Street Southbound				3rd Street Westbound				"G" Street Northbound				3rd Street Eastbound				
Start Time	Left	Thru	Right	App. Total	Left	Thru	Right	App. Total	Left	Thru	Right	App. Total	Left	Thru	Right	App. Total	Int. Total
Peak Hour Analysis From 04:30 PM to 05:15 PM - Peak 1 of 1																	
Peak Hour for Entire Intersection Begins at 04:30 PM																	
04:30 PM	0	**2**	0	**2**	1	0	0	1	0	**1**	0	1	1	0	**2**	3	7
04:45 PM	0	0	**1**	1	0	0	0	0	0	0	0	0	**2**	0	2	**4**	5
05:00 PM	0	0	0	0	**4**	0	0	**4**	**1**	1	**1**	**3**	0	0	1	1	**8**
05:15 PM	0	0	1	1	0	0	0	0	0	0	1	1	0	**2**	2	4	6
Total Volume	0	2	2	4	5	0	0	5	1	2	2	5	3	2	7	12	26
% App. Total	0	50	50		100	0	0		20	40	40		25	16.7	58.3		
PHF	.000	.250	.500	.500	.313	.000	.000	.313	.250	.500	.500	.417	.375	.250	.875	.750	.813

Counts Unlimited Inc.
25286 Jaclyn Avenue
Moreno Valley, CA 92557
(951) 485-7934

City of San Bernardino
N/S: "H" Street - "G" Street
E/W: 3rd Street
Weather: Sunny

File Name : 0631020PM
Site Code : 9268063
Start Date : 10/20/2009
Page No : 2

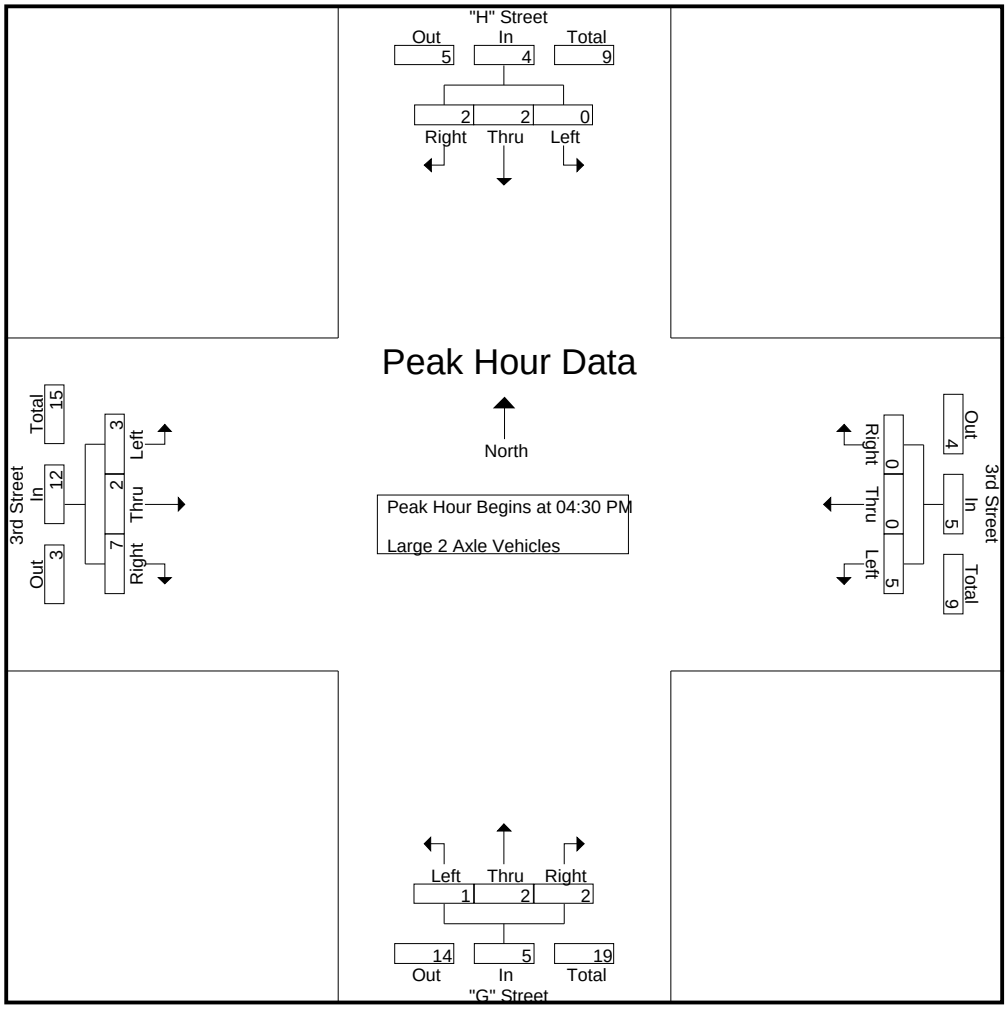

Peak Hour Analysis From 04:30 PM to 05:15 PM - Peak 1 of 1

Peak Hour for Each Approach Begins at:

	04:30 PM				04:30 PM				04:30 PM				04:30 PM			
+0 mins.	0	**2**	0	**2**	1	0	0	1	0	**1**	0	1	1	0	**2**	3
+15 mins.	0	0	**1**	1	0	0	0	0	0	0	0	0	**2**	0	2	**4**
+30 mins.	0	0	0	0	**4**	0	0	**4**	**1**	1	**1**	**3**	0	0	1	1
+45 mins.	0	0	1	1	0	0	0	0	0	0	1	1	0	**2**	2	4
Total Volume	0	2	2	4	5	0	0	5	1	2	2	5	3	2	7	12
% App. Total	0	50	50		100	0	0		20	40	40		25	16.7	58.3	
PHF	.000	.250	.500	.500	.313	.000	.000	.313	.250	.500	.500	.417	.375	.250	.875	.750

Counts Unlimited Inc.
25286 Jaclyn Avenue
Moreno Valley, CA 92557
(951) 485-7934

City of San Bernardino
N/S: "H" Street - "G" Street
E/W: 3rd Street
Weather: Sunny

File Name : 0631020PM
Site Code : 9268063
Start Date : 10/20/2009
Page No : 1

Groups Printed- 3 Axle Vehicles

	"H" Street Southbound				3rd Street Westbound				"G" Street Northbound				3rd Street Eastbound				
Start Time	Left	Thru	Right	App. Total	Left	Thru	Right	App. Total	Left	Thru	Right	App. Total	Left	Thru	Right	App. Total	Int. Total
04:00 PM	0	0	1	1	0	1	0	1	0	1	0	1	0	0	0	0	3
04:15 PM	0	0	0	0	1	0	0	1	0	3	0	3	0	0	0	0	4
04:30 PM	0	0	0	0	0	0	0	0	0	0	0	0	0	0	0	0	0
04:45 PM	0	0	0	0	0	0	0	0	0	0	0	0	1	0	0	1	1
Total	0	0	1	1	1	1	0	2	0	4	0	4	1	0	0	1	8
05:00 PM	0	0	0	0	0	0	0	0	0	2	0	2	0	0	0	0	2
05:15 PM	1	0	0	1	0	0	0	0	1	0	0	1	1	0	0	1	3
05:30 PM	0	0	0	0	0	0	0	0	0	0	0	0	0	0	0	0	0
05:45 PM	0	1	0	1	0	1	0	1	0	1	0	1	0	0	0	0	3
Total	1	1	0	2	0	1	0	1	1	3	0	4	1	0	0	1	8
Grand Total	1	1	1	3	1	2	0	3	1	7	0	8	2	0	0	2	16
Apprch %	33.3	33.3	33.3		33.3	66.7	0		12.5	87.5	0		100	0	0		
Total %	6.2	6.2	6.2	18.8	6.2	12.5	0	18.8	6.2	43.8	0	50	12.5	0	0	12.5	

	"H" Street Southbound				3rd Street Westbound				"G" Street Northbound				3rd Street Eastbound				
Start Time	Left	Thru	Right	App. Total	Left	Thru	Right	App. Total	Left	Thru	Right	App. Total	Left	Thru	Right	App. Total	Int. Total
Peak Hour Analysis From 04:30 PM to 05:15 PM - Peak 1 of 1																	
Peak Hour for Entire Intersection Begins at 04:30 PM																	
04:30 PM	0	0	0	0	0	0	0	0	0	0	0	0	0	0	0	0	0
04:45 PM	0	0	0	0	0	0	0	0	0	0	0	0	**1**	0	0	**1**	1
05:00 PM	0	0	0	0	0	0	0	0	0	**2**	0	**2**	0	0	0	0	2
05:15 PM	**1**	0	0	**1**	0	0	0	0	**1**	0	0	1	1	0	0	1	**3**
Total Volume	1	0	0	1	0	0	0	0	1	2	0	3	2	0	0	2	6
% App. Total	100	0	0		0	0	0		33.3	66.7	0		100	0	0		
PHF	.250	.000	.000	.250	.000	.000	.000	.000	.250	.250	.000	.375	.500	.000	.000	.500	.500

Counts Unlimited Inc.
25286 Jaclyn Avenue
Moreno Valley, CA 92557
(951) 485-7934

City of San Bernardino
N/S: "H" Street - "G" Street
E/W: 3rd Street
Weather: Sunny

File Name : 0631020PM
Site Code : 9268063
Start Date : 10/20/2009
Page No : 2

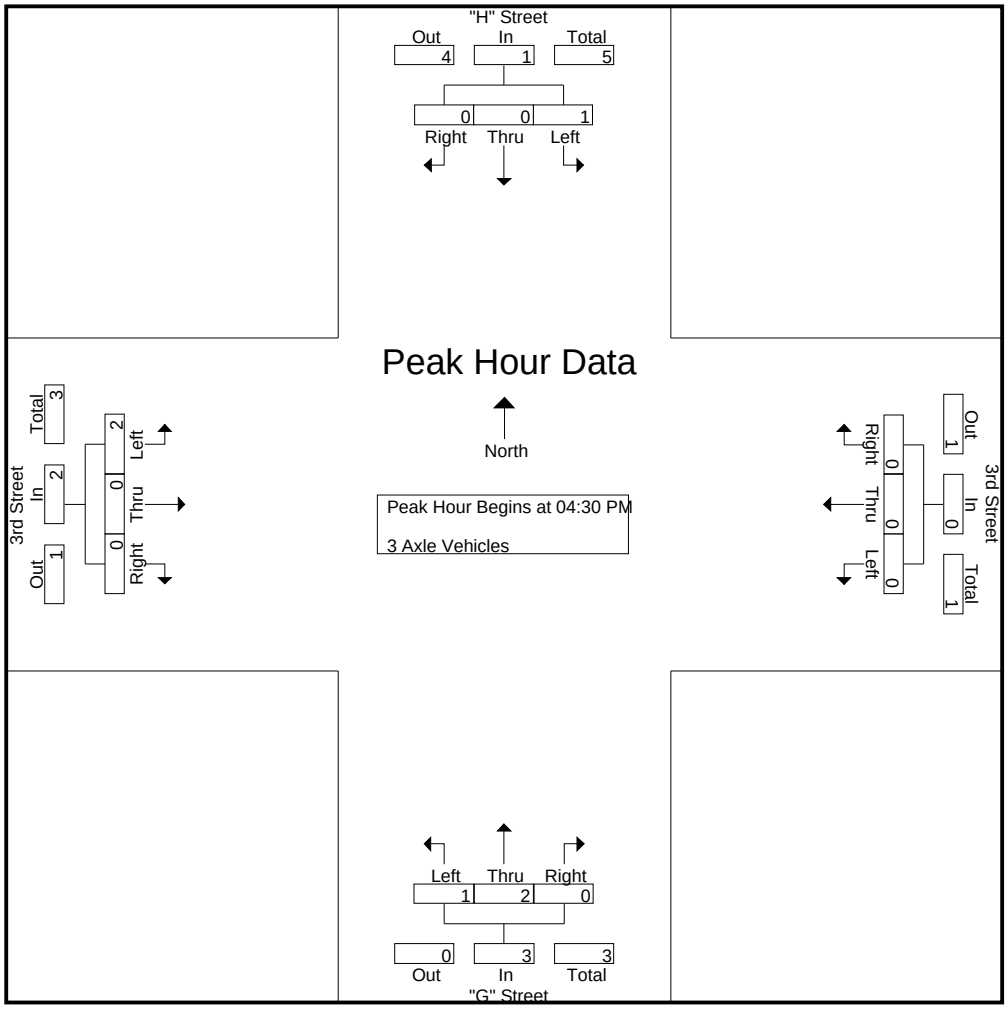

Peak Hour Analysis From 04:30 PM to 05:15 PM - Peak 1 of 1

Peak Hour for Each Approach Begins at:

	04:30 PM				04:30 PM				04:30 PM				04:30 PM			
+0 mins.	0	0	0	0	0	0	0	0	0	0	0	0	0	0	0	0
+15 mins.	0	0	0	0	0	0	0	0	0	0	0	0	**1**	0	0	**1**
+30 mins.	0	0	0	0	0	0	0	0	0	**2**	0	**2**	0	0	0	0
+45 mins.	**1**	0	0	**1**	0	0	0	0	**1**	0	0	1	1	0	0	1
Total Volume	1	0	0	1	0	0	0	0	1	2	0	3	2	0	0	2
% App. Total	100	0	0		0	0	0		33.3	66.7	0		100	0	0	
PHF	.250	.000	.000	.250	.000	.000	.000	.000	.250	.250	.000	.375	.500	.000	.000	.500

Counts Unlimited Inc.
25286 Jaclyn Avenue
Moreno Valley, CA 92557
(951) 485-7934

City of San Bernardino
N/S: "H" Street - "G" Street
E/W: 3rd Street
Weather: Sunny

File Name : 0631020PM
Site Code : 9268063
Start Date : 10/20/2009
Page No : 1

Groups Printed- 4+ Axle Trucks

	"H" Street Southbound				3rd Street Westbound				"G" Street Northbound				3rd Street Eastbound				
Start Time	Left	Thru	Right	App. Total	Left	Thru	Right	App. Total	Left	Thru	Right	App. Total	Left	Thru	Right	App. Total	Int. Total
04:00 PM	0	0	0	0	0	0	0	0	0	0	0	0	0	0	1	1	1
04:15 PM	0	0	0	0	0	0	0	0	0	0	0	0	0	0	0	0	0
04:30 PM	0	0	0	0	0	0	0	0	1	1	0	2	0	1	0	1	3
04:45 PM	0	0	0	0	0	0	0	0	0	1	0	1	0	3	0	3	4
Total	0	0	0	0	0	0	0	0	1	2	0	3	0	4	1	5	8
05:00 PM	0	1	0	1	0	0	0	0	0	0	0	0	0	0	0	0	1
05:15 PM	0	0	0	0	0	0	0	0	0	2	0	2	0	0	0	0	2
05:30 PM	0	0	0	0	0	0	0	0	0	1	0	1	0	0	0	0	1
05:45 PM	0	0	0	0	0	0	0	0	0	2	0	2	0	0	0	0	2
Total	0	1	0	1	0	0	0	0	0	5	0	5	0	0	0	0	6
Grand Total	0	1	0	1	0	0	0	0	1	7	0	8	0	4	1	5	14
Apprch %	0	100	0		0	0	0		12.5	87.5	0		0	80	20		
Total %	0	7.1	0	7.1	0	0	0	0	7.1	50	0	57.1	0	28.6	7.1	35.7	

	"H" Street Southbound				3rd Street Westbound				"G" Street Northbound				3rd Street Eastbound				
Start Time	Left	Thru	Right	App. Total	Left	Thru	Right	App. Total	Left	Thru	Right	App. Total	Left	Thru	Right	App. Total	Int. Total
Peak Hour Analysis From 04:30 PM to 05:15 PM - Peak 1 of 1																	
Peak Hour for Entire Intersection Begins at 04:30 PM																	
04:30 PM	0	0	0	0	0	0	0	0	**1**	1	0	**2**	0	1	0	1	3
04:45 PM	0	0	0	0	0	0	0	0	0	1	0	1	0	**3**	0	**3**	**4**
05:00 PM	0	**1**	0	**1**	0	0	0	0	0	0	0	0	0	0	0	0	1
05:15 PM	0	0	0	0	0	0	0	0	0	**2**	0	2	0	0	0	0	2
Total Volume	0	1	0	1	0	0	0	0	1	4	0	5	0	4	0	4	10
% App. Total	0	100	0		0	0	0		20	80	0		0	100	0		
PHF	.000	.250	.000	.250	.000	.000	.000	.000	.250	.500	.000	.625	.000	.333	.000	.333	.625

Counts Unlimited Inc.
25286 Jaclyn Avenue
Moreno Valley, CA 92557
(951) 485-7934

City of San Bernardino
N/S: "H" Street - "G" Street
E/W: 3rd Street
Weather: Sunny

File Name : 0631020PM
Site Code : 9268063
Start Date : 10/20/2009
Page No : 2

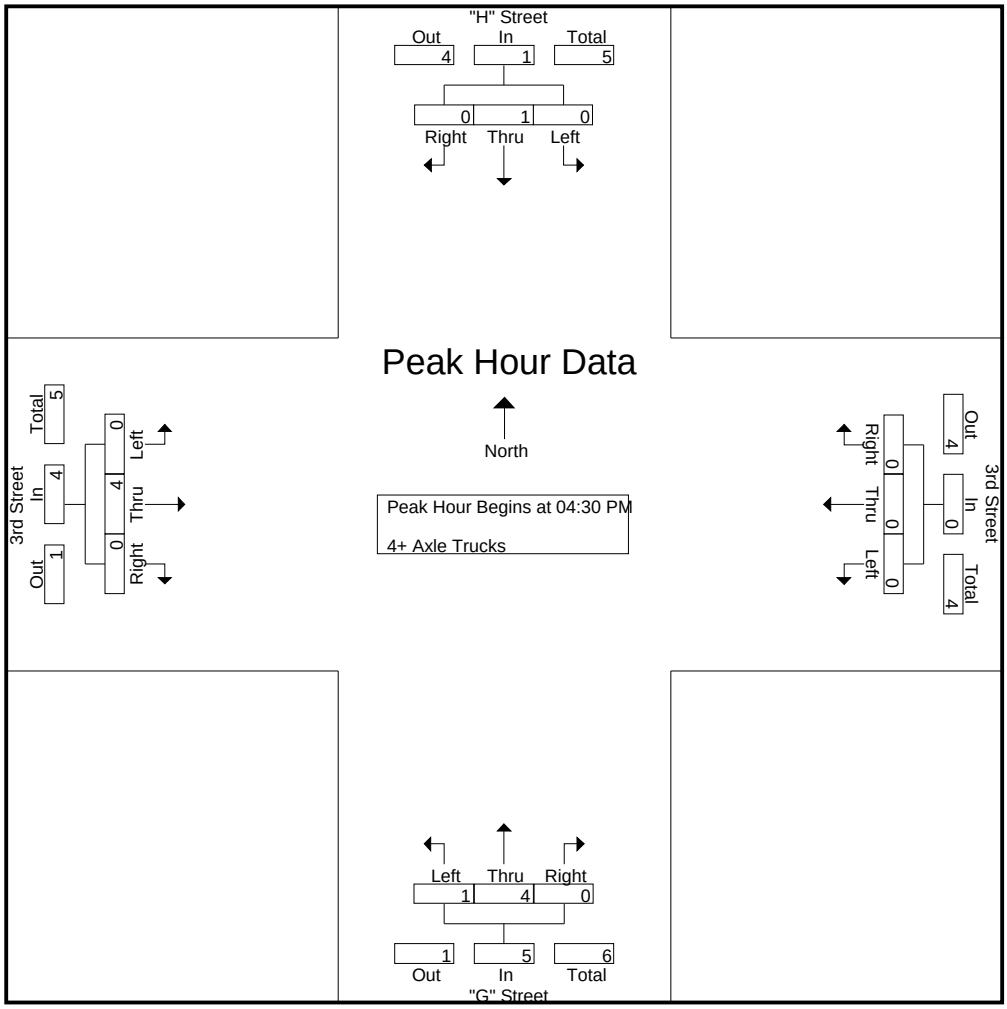

Peak Hour Analysis From 04:30 PM to 05:15 PM - Peak 1 of 1

Peak Hour for Each Approach Begins at:

	04:30 PM				04:30 PM				04:30 PM				04:30 PM			
+0 mins.	0	0	0	0	0	0	0	0	**1**	1	0	**2**	0	1	0	1
+15 mins.	0	0	0	0	0	0	0	0	0	1	0	1	0	**3**	0	**3**
+30 mins.	0	**1**	0	**1**	0	0	0	0	0	0	0	0	0	0	0	0
+45 mins.	0	0	0	0	0	0	0	0	0	**2**	0	2	0	0	0	0
Total Volume	0	1	0	1	0	0	0	0	1	4	0	5	0	4	0	4
% App. Total	0	100	0		0	0	0		20	80	0		0	100	0	
PHF	.000	.250	.000	.250	.000	.000	.000	.000	.250	.500	.000	.625	.000	.333	.000	.333

Counts Unlimited Inc.
25286 Jaclyn Avenue
Moreno Valley, CA 92557
(951) 485-7934

City of San Bernardino
N/S: "G" Street
E/W: 2nd Street
Weather: Sunny

File Name : SBCG2AM
Site Code : 9268001
Start Date : 10/21/2009
Page No : 1

Groups Printed- Total Volume

	"G" Street Southbound				2nd Street Westbound				"G" Street Northbound				2nd Street Eastbound				
Start Time	Left	Thru	Right	App. Total	Left	Thru	Right	App. Total	Left	Thru	Right	App. Total	Left	Thru	Right	App. Total	Int. Total
07:00 AM	18	12	4	34	5	44	6	55	20	9	5	34	15	223	27	265	388
07:15 AM	17	20	7	44	2	68	6	76	17	24	10	51	27	289	25	341	512
07:30 AM	24	27	9	60	5	65	12	82	29	19	5	53	23	213	29	265	460
07:45 AM	17	62	13	92	11	71	6	88	17	23	5	45	31	245	23	299	524
Total	76	121	33	230	23	248	30	301	83	75	25	183	96	970	104	1170	1884
08:00 AM	27	22	11	60	8	61	7	76	28	11	9	48	24	232	29	285	469
08:15 AM	18	32	13	63	7	84	5	96	27	12	7	46	12	180	20	212	417
08:30 AM	15	33	16	64	7	69	9	85	25	20	3	48	14	192	20	226	423
08:45 AM	21	34	3	58	16	89	10	115	23	21	3	47	12	161	14	187	407
Total	81	121	43	245	38	303	31	372	103	64	22	189	62	765	83	910	1716
Grand Total	157	242	76	475	61	551	61	673	186	139	47	372	158	1735	187	2080	3600
Apprch %	33.1	50.9	16		9.1	81.9	9.1		50	37.4	12.6		7.6	83.4	9		
Total %	4.4	6.7	2.1	13.2	1.7	15.3	1.7	18.7	5.2	3.9	1.3	10.3	4.4	48.2	5.2	57.8	

	"G" Street Southbound				2nd Street Westbound				"G" Street Northbound				2nd Street Eastbound				
Start Time	Left	Thru	Right	App. Total	Left	Thru	Right	App. Total	Left	Thru	Right	App. Total	Left	Thru	Right	App. Total	Int. Total
Peak Hour Analysis From 07:00 AM to 08:45 AM - Peak 1 of 1																	
Peak Hour for Entire Intersection Begins at 07:15 AM																	
07:15 AM	17	20	7	44	2	68	6	76	17	**24**	**10**	51	27	**289**	25	**341**	512
07:30 AM	24	27	9	60	5	65	**12**	82	**29**	19	5	**53**	23	213	**29**	265	460
07:45 AM	17	**62**	**13**	**92**	**11**	**71**	6	**88**	17	23	5	45	**31**	245	23	299	**524**
08:00 AM	**27**	22	11	60	8	61	7	76	28	11	9	48	24	232	29	285	469
Total Volume	85	131	40	256	26	265	31	322	91	77	29	197	105	979	106	1190	1965
% App. Total	33.2	51.2	15.6		8.1	82.3	9.6		46.2	39.1	14.7		8.8	82.3	8.9		
PHF	.787	.528	.769	.696	.591	.933	.646	.915	.784	.802	.725	.929	.847	.847	.914	.872	.938

Counts Unlimited Inc.
25286 Jaclyn Avenue
Moreno Valley, CA 92557
(951) 485-7934

City of San Bernardino
N/S: "G" Street
E/W: 2nd Street
Weather: Sunny

File Name : SBCG2AM
Site Code : 9268001
Start Date : 10/21/2009
Page No : 2

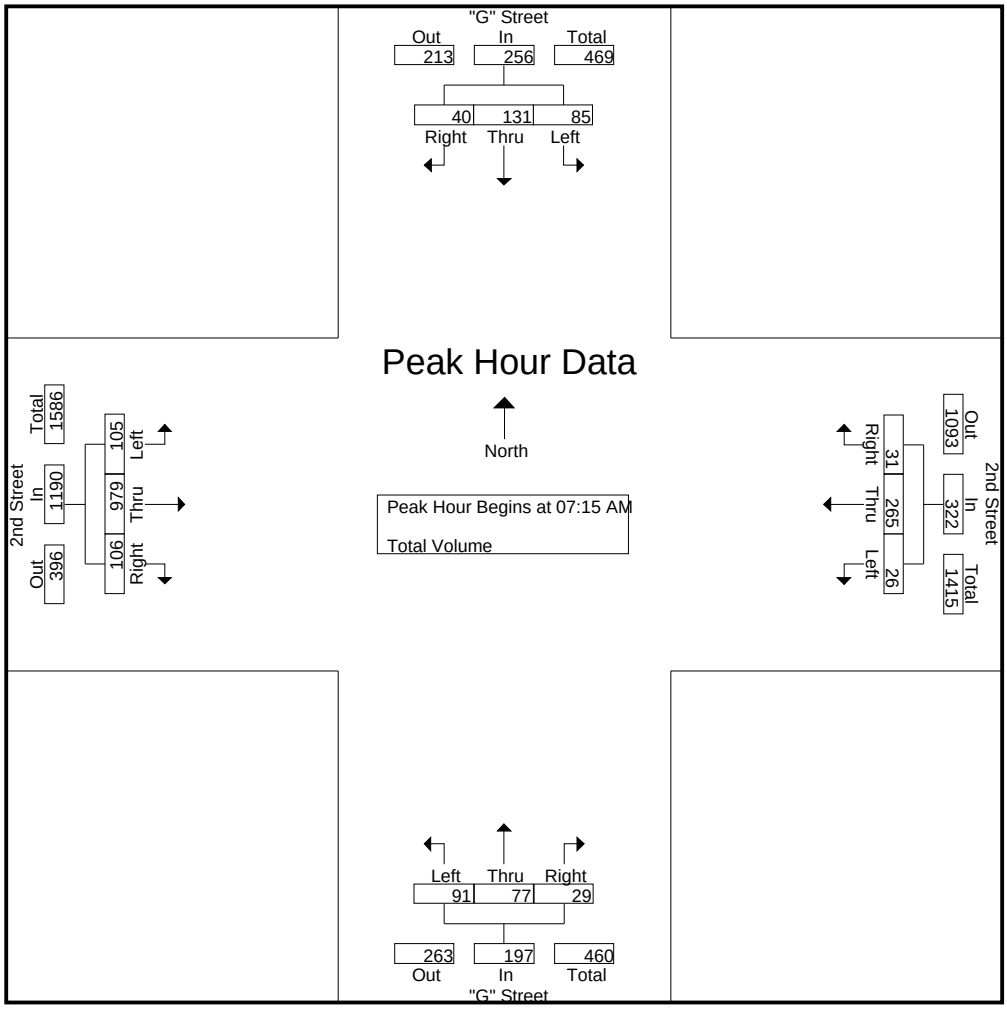

Peak Hour Analysis From 07:00 AM to 08:45 AM - Peak 1 of 1

Peak Hour for Each Approach Begins at:

	07:45 AM				08:00 AM				07:15 AM				07:15 AM			
+0 mins.	17	**62**	13	**92**	8	61	7	76	17	**24**	**10**	51	27	**289**	25	**341**
+15 mins.	**27**	22	11	60	7	84	5	96	**29**	19	5	**53**	23	213	**29**	265
+30 mins.	18	32	13	63	7	69	9	85	17	23	5	45	**31**	245	23	299
+45 mins.	15	33	**16**	64	**16**	**89**	**10**	**115**	28	11	9	48	24	232	29	285
Total Volume	77	149	53	279	38	303	31	372	91	77	29	197	105	979	106	1190
% App. Total	27.6	53.4	19		10.2	81.5	8.3		46.2	39.1	14.7		8.8	82.3	8.9	
PHF	.713	.601	.828	.758	.594	.851	.775	.809	.784	.802	.725	.929	.847	.847	.914	.872

Counts Unlimited Inc.
25286 Jaclyn Avenue
Moreno Valley, CA 92557
(951) 485-7934

City of San Bernardino
N/S: "G" Street
E/W: 2nd Street
Weather: Sunny

File Name : SBCG2PM
Site Code : 9268001
Start Date : 10/21/2009
Page No : 1

Groups Printed- Total Volume

	"G" Street Southbound				2nd Street Westbound				"G" Street Northbound				2nd Street Eastbound				
Start Time	Left	Thru	Right	App. Total	Left	Thru	Right	App. Total	Left	Thru	Right	App. Total	Left	Thru	Right	App. Total	Int. Total
04:00 PM	16	23	26	65	13	188	16	217	80	39	11	130	22	96	9	127	539
04:15 PM	10	34	14	58	19	177	14	210	48	42	15	105	13	86	13	112	485
04:30 PM	12	31	22	65	19	228	14	261	64	46	8	118	19	92	6	117	561
04:45 PM	15	39	16	70	20	213	16	249	59	34	17	110	7	83	7	97	526
Total	53	127	78	258	71	806	60	937	251	161	51	463	61	357	35	453	2111
05:00 PM	15	28	21	64	15	277	22	314	76	55	11	142	23	65	7	95	615
05:15 PM	11	41	27	79	27	224	25	276	58	50	12	120	25	65	7	97	572
05:30 PM	16	39	23	78	21	248	25	294	66	38	5	109	17	50	5	72	553
05:45 PM	6	37	25	68	22	167	18	207	58	41	7	106	16	64	5	85	466
Total	48	145	96	289	85	916	90	1091	258	184	35	477	81	244	24	349	2206
Grand Total	101	272	174	547	156	1722	150	2028	509	345	86	940	142	601	59	802	4317
Apprch %	18.5	49.7	31.8		7.7	84.9	7.4		54.1	36.7	9.1		17.7	74.9	7.4		
Total %	2.3	6.3	4	12.7	3.6	39.9	3.5	47	11.8	8	2	21.8	3.3	13.9	1.4	18.6	

	"G" Street Southbound				2nd Street Westbound				"G" Street Northbound				2nd Street Eastbound				
Start Time	Left	Thru	Right	App. Total	Left	Thru	Right	App. Total	Left	Thru	Right	App. Total	Left	Thru	Right	App. Total	Int. Total
Peak Hour Analysis From 04:00 PM to 05:45 PM - Peak 1 of 1																	
Peak Hour for Entire Intersection Begins at 04:30 PM																	
04:30 PM	12	31	22	65	19	228	14	261	64	46	8	118	19	**92**	6	**117**	561
04:45 PM	**15**	39	16	70	20	213	16	249	59	34	**17**	110	7	83	**7**	97	526
05:00 PM	15	28	21	64	15	**277**	22	**314**	**76**	**55**	11	**142**	23	65	7	95	**615**
05:15 PM	11	**41**	**27**	**79**	**27**	224	**25**	276	58	50	12	120	**25**	65	7	97	572
Total Volume	53	139	86	278	81	942	77	1100	257	185	48	490	74	305	27	406	2274
% App. Total	19.1	50	30.9		7.4	85.6	7		52.4	37.8	9.8		18.2	75.1	6.7		
PHF	.883	.848	.796	.880	.750	.850	.770	.876	.845	.841	.706	.863	.740	.829	.964	.868	.924

Counts Unlimited Inc.
25286 Jaclyn Avenue
Moreno Valley, CA 92557
(951) 485-7934

City of San Bernardino
N/S: "G" Street
E/W: 2nd Street
Weather: Sunny

File Name : SBCG2PM
Site Code : 9268001
Start Date : 10/21/2009
Page No : 2

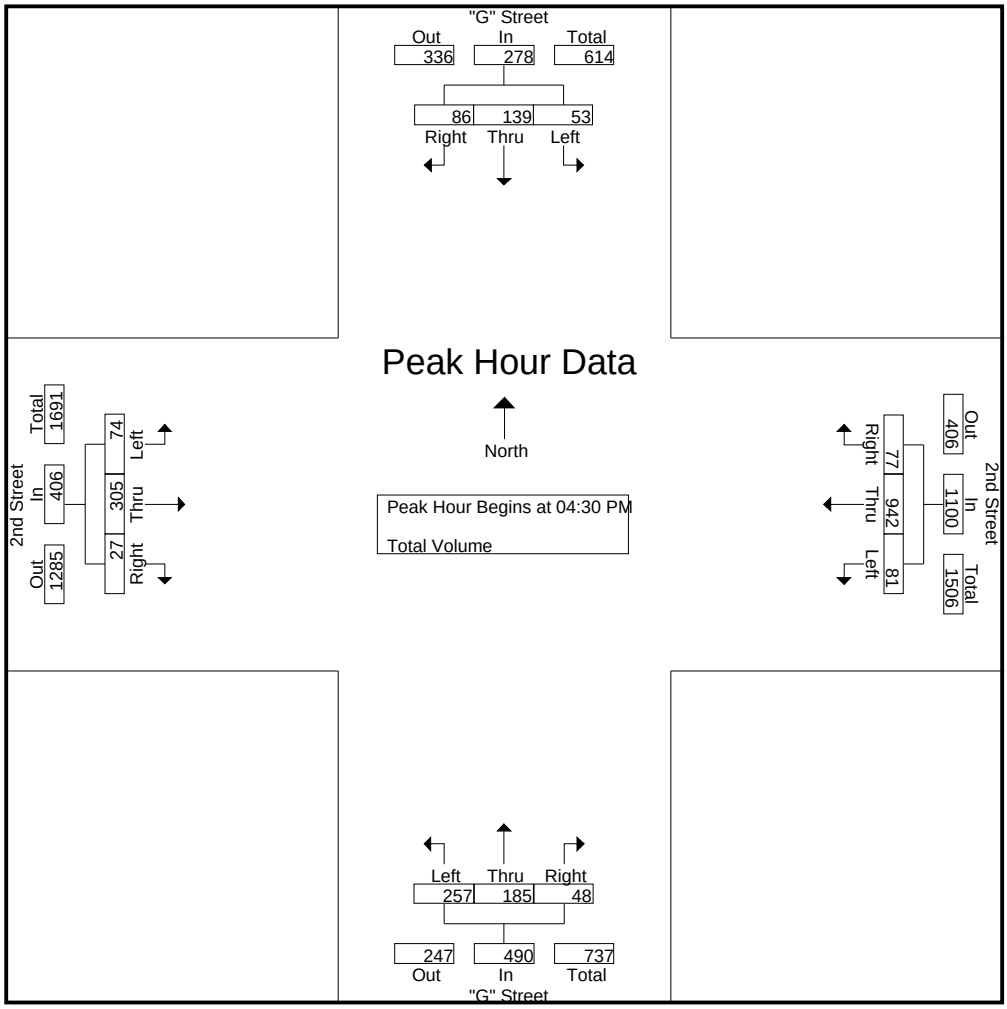

Peak Hour Analysis From 04:00 PM to 05:45 PM - Peak 1 of 1

Peak Hour for Each Approach Begins at:

	04:45 PM				04:45 PM				04:30 PM				04:00 PM			
+0 mins.	15	39	16	70	20	213	16	249	64	46	8	118	**22**	**96**	9	**127**
+15 mins.	15	28	21	64	15	**277**	22	**314**	59	34	**17**	110	13	86	**13**	112
+30 mins.	11	**41**	**27**	**79**	**27**	224	**25**	276	**76**	**55**	11	**142**	19	92	6	117
+45 mins.	**16**	39	23	78	21	248	25	294	58	50	12	120	7	83	7	97
Total Volume	57	147	87	291	83	962	88	1133	257	185	48	490	61	357	35	453
% App. Total	19.6	50.5	29.9		7.3	84.9	7.8		52.4	37.8	9.8		13.5	78.8	7.7	
PHF	.891	.896	.806	.921	.769	.868	.880	.902	.845	.841	.706	.863	.693	.930	.673	.892

Counts Unlimited Inc.
25286 Jaclyn Avenue
Moreno Valley, CA 92557
(951) 485-7934

City of San Bernardino
N/S: "G" Street
E/W: Rialto Avenue
Weather: Sunny

File Name : SBCGRIAM
Site Code : 9268092
Start Date : 10/21/2009
Page No : 1

Groups Printed- Total Volume

	"G" Street Southbound				Rialto Avenue Westbound				"G" Street Northbound				Rialto Avenue Eastbound				
Start Time	Left	Thru	Right	App. Total	Left	Thru	Right	App. Total	Left	Thru	Right	App. Total	Left	Thru	Right	App. Total	Int. Total
07:00 AM	22	6	2	30	5	31	8	44	2	13	5	20	5	96	15	116	210
07:15 AM	15	11	5	31	3	51	9	63	1	12	5	18	13	127	8	148	260
07:30 AM	26	8	6	40	3	55	12	70	2	18	2	22	13	122	7	142	274
07:45 AM	34	35	5	74	10	78	13	101	4	13	3	20	14	151	8	173	368
Total	97	60	18	175	21	215	42	278	9	56	15	80	45	496	38	579	1112
08:00 AM	19	13	9	41	6	49	14	69	1	12	2	15	11	111	4	126	251
08:15 AM	10	16	18	44	8	48	18	74	4	8	8	20	14	100	9	123	261
08:30 AM	15	13	13	41	10	63	16	89	4	15	8	27	11	98	9	118	275
08:45 AM	10	21	5	36	10	54	20	84	3	9	3	15	10	94	7	111	246
Total	54	63	45	162	34	214	68	316	12	44	21	77	46	403	29	478	1033
Grand Total	151	123	63	337	55	429	110	594	21	100	36	157	91	899	67	1057	2145
Apprch %	44.8	36.5	18.7		9.3	72.2	18.5		13.4	63.7	22.9		8.6	85.1	6.3		
Total %	7	5.7	2.9	15.7	2.6	20	5.1	27.7	1	4.7	1.7	7.3	4.2	41.9	3.1	49.3	

	"G" Street Southbound				Rialto Avenue Westbound				"G" Street Northbound				Rialto Avenue Eastbound				
Start Time	Left	Thru	Right	App. Total	Left	Thru	Right	App. Total	Left	Thru	Right	App. Total	Left	Thru	Right	App. Total	Int. Total
Peak Hour Analysis From 07:00 AM to 08:45 AM - Peak 1 of 1																	
Peak Hour for Entire Intersection Begins at 07:45 AM																	
07:45 AM	**34**	**35**	5	**74**	**10**	**78**	13	**101**	**4**	13	3	20	**14**	**151**	8	**173**	**368**
08:00 AM	19	13	9	41	6	49	14	69	1	12	2	15	11	111	4	126	251
08:15 AM	10	16	**18**	44	8	48	**18**	74	4	8	**8**	20	14	100	**9**	123	261
08:30 AM	15	13	13	41	10	63	16	89	4	**15**	8	**27**	11	98	9	118	275
Total Volume	78	77	45	200	34	238	61	333	13	48	21	82	50	460	30	540	1155
% App. Total	39	38.5	22.5		10.2	71.5	18.3		15.9	58.5	25.6		9.3	85.2	5.6		
PHF	.574	.550	.625	.676	.850	.763	.847	.824	.813	.800	.656	.759	.893	.762	.833	.780	.785

Counts Unlimited Inc.
25286 Jaclyn Avenue
Moreno Valley, CA 92557
(951) 485-7934

City of San Bernardino
N/S: "G" Street
E/W: Rialto Avenue
Weather: Sunny

File Name : SBCGRIAM
Site Code : 9268092
Start Date : 10/21/2009
Page No : 2

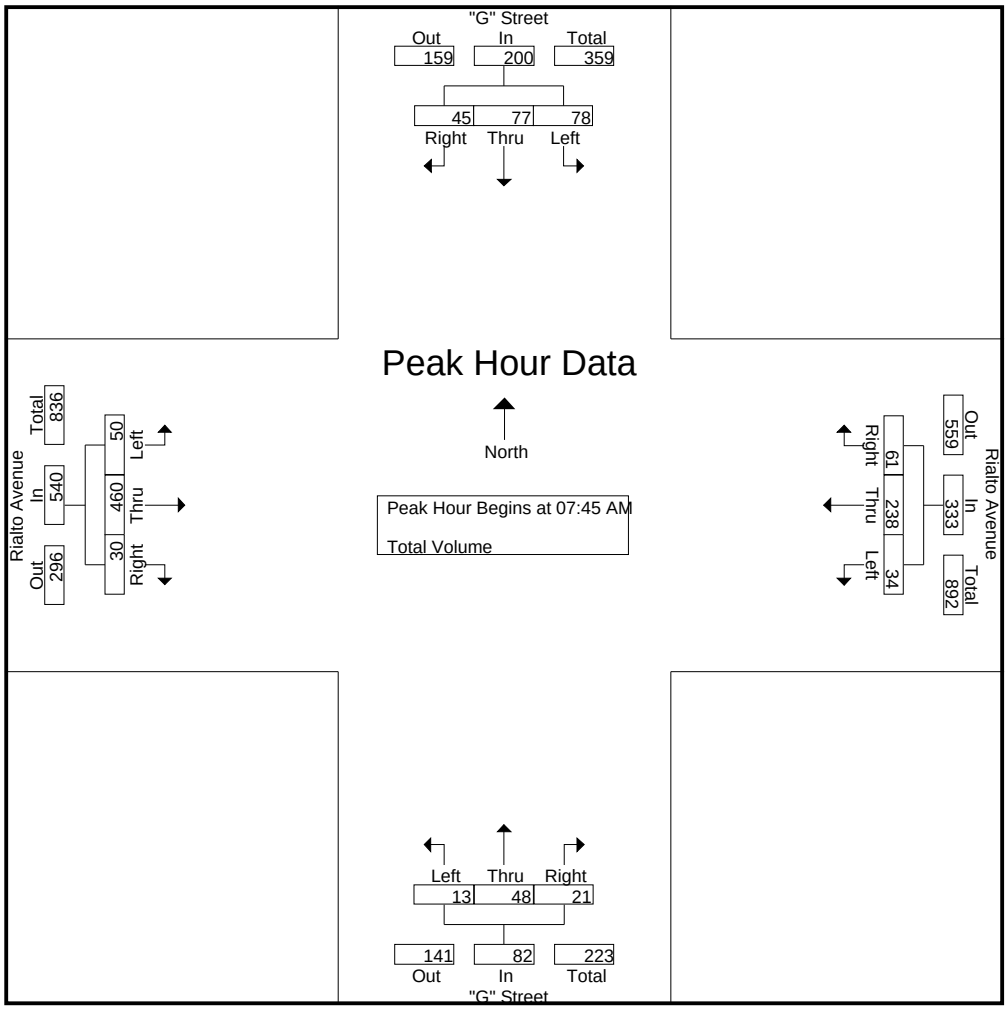

Peak Hour Analysis From 07:00 AM to 08:45 AM - Peak 1 of 1
Peak Hour for Each Approach Begins at:

	07:45 AM				07:45 AM				07:45 AM				07:15 AM			
+0 mins.	**34**	**35**	5	**74**	**10**	**78**	13	**101**	**4**	13	3	20	13	127	**8**	148
+15 mins.	19	13	9	41	6	49	14	69	1	12	2	15	13	122	7	142
+30 mins.	10	16	**18**	44	8	48	**18**	74	4	8	**8**	20	**14**	**151**	8	**173**
+45 mins.	15	13	13	41	10	63	16	89	4	**15**	8	**27**	11	111	4	126
Total Volume	78	77	45	200	34	238	61	333	13	48	21	82	51	511	27	589
% App. Total	39	38.5	22.5		10.2	71.5	18.3		15.9	58.5	25.6		8.7	86.8	4.6	
PHF	.574	.550	.625	.676	.850	.763	.847	.824	.813	.800	.656	.759	.911	.846	.844	.851

Counts Unlimited Inc.
25286 Jaclyn Avenue
Moreno Valley, CA 92557
(951) 485-7934

City of San Bernardino
N/S: "G" Street
E/W: Rialto Avenue
Weather: Sunny

File Name : SBCGRIPM
Site Code : 9268092
Start Date : 10/21/2009
Page No : 1

Groups Printed- Total Volume

	"G" Street Southbound				Rialto Avenue Westbound				"G" Street Northbound				Rialto Avenue Eastbound				
Start Time	Left	Thru	Right	App. Total	Left	Thru	Right	App. Total	Left	Thru	Right	App. Total	Left	Thru	Right	App. Total	Int. Total
04:00 PM	14	16	5	35	7	99	46	152	13	33	8	54	16	98	11	125	366
04:15 PM	13	22	5	40	1	78	14	93	11	48	5	64	16	93	4	113	310
04:30 PM	9	24	11	44	1	114	40	155	12	42	1	55	15	73	6	94	348
04:45 PM	11	25	18	54	6	96	27	129	14	30	2	46	11	66	9	86	315
Total	47	87	39	173	15	387	127	529	50	153	16	219	58	330	30	418	1339
05:00 PM	9	17	25	51	11	155	32	198	14	53	6	73	15	86	0	101	423
05:15 PM	9	23	13	45	4	111	46	161	12	41	3	56	12	98	9	119	381
05:30 PM	9	19	8	36	6	100	32	138	11	32	4	47	11	79	1	91	312
05:45 PM	9	17	16	42	1	104	29	134	12	28	0	40	13	104	3	120	336
Total	36	76	62	174	22	470	139	631	49	154	13	216	51	367	13	431	1452
Grand Total	83	163	101	347	37	857	266	1160	99	307	29	435	109	697	43	849	2791
Apprch %	23.9	47	29.1		3.2	73.9	22.9		22.8	70.6	6.7		12.8	82.1	5.1		
Total %	3	5.8	3.6	12.4	1.3	30.7	9.5	41.6	3.5	11	1	15.6	3.9	25	1.5	30.4	

	"G" Street Southbound				Rialto Avenue Westbound				"G" Street Northbound				Rialto Avenue Eastbound				
Start Time	Left	Thru	Right	App. Total	Left	Thru	Right	App. Total	Left	Thru	Right	App. Total	Left	Thru	Right	App. Total	Int. Total
Peak Hour Analysis From 04:00 PM to 05:45 PM - Peak 1 of 1																	
Peak Hour for Entire Intersection Begins at 04:30 PM																	
04:30 PM	9	24	11	44	1	114	40	155	12	42	1	55	**15**	73	6	94	348
04:45 PM	**11**	**25**	18	**54**	6	96	27	129	**14**	30	2	46	11	66	**9**	86	315
05:00 PM	9	17	**25**	51	**11**	**155**	32	**198**	14	**53**	**6**	**73**	15	86	0	101	**423**
05:15 PM	9	23	13	45	4	111	**46**	161	12	41	3	56	12	**98**	9	**119**	381
Total Volume	38	89	67	194	22	476	145	643	52	166	12	230	53	323	24	400	1467
% App. Total	19.6	45.9	34.5		3.4	74	22.6		22.6	72.2	5.2		13.2	80.8	6		
PHF	.864	.890	.670	.898	.500	.768	.788	.812	.929	.783	.500	.788	.883	.824	.667	.840	.867

Counts Unlimited Inc.
25286 Jaclyn Avenue
Moreno Valley, CA 92557
(951) 485-7934

City of San Bernardino
N/S: "G" Street
E/W: Rialto Avenue
Weather: Sunny

File Name : SBCGRIPM
Site Code : 9268092
Start Date : 10/21/2009
Page No : 2

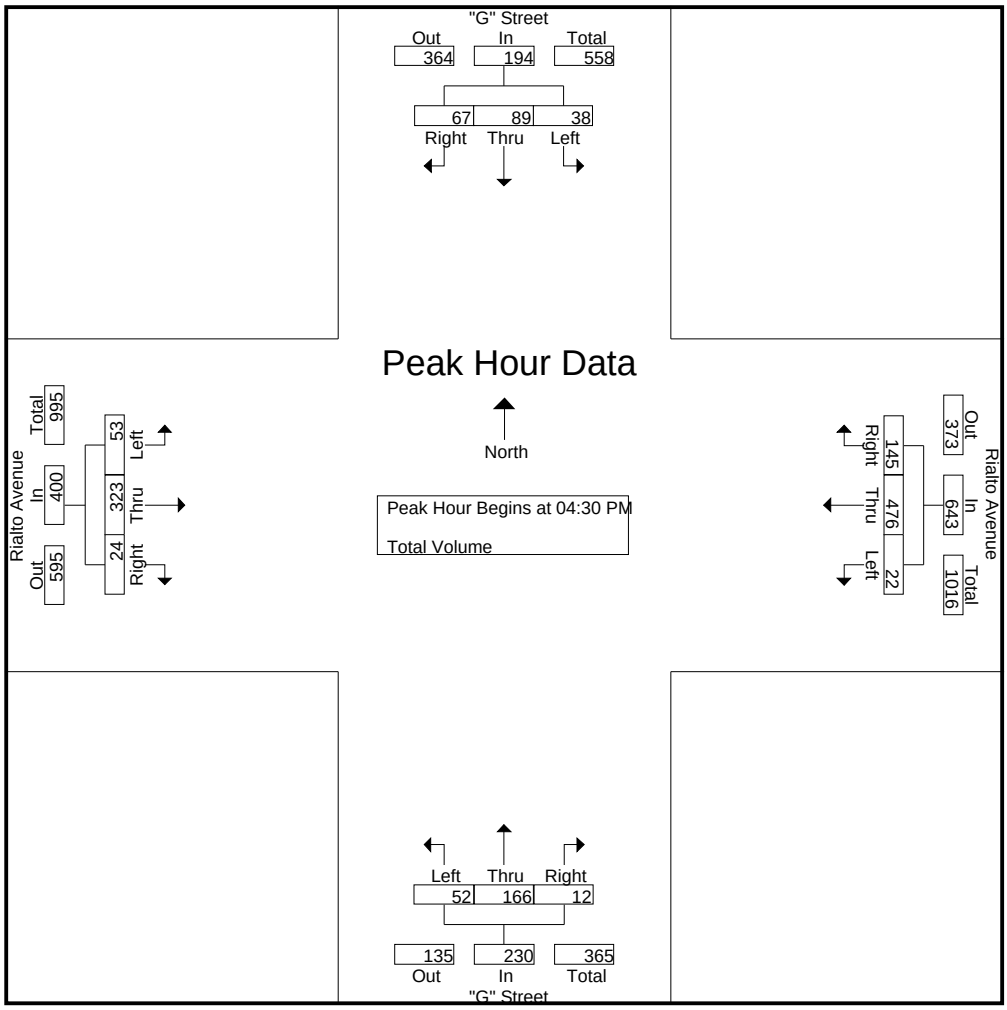

Peak Hour Analysis From 04:00 PM to 05:45 PM - Peak 1 of 1
Peak Hour for Each Approach Begins at:

	04:30 PM				04:30 PM				04:15 PM				05:00 PM			
+0 mins.	9	24	11	44	1	114	40	155	11	48	5	64	**15**	86	0	101
+15 mins.	**11**	**25**	18	**54**	6	96	27	129	12	42	1	55	12	98	**9**	119
+30 mins.	9	17	**25**	51	**11**	**155**	32	**198**	**14**	30	2	46	11	79	1	91
+45 mins.	9	23	13	45	4	111	**46**	161	14	**53**	**6**	**73**	13	**104**	3	**120**
Total Volume	38	89	67	194	22	476	145	643	51	173	14	238	51	367	13	431
% App. Total	19.6	45.9	34.5		3.4	74	22.6		21.4	72.7	5.9		11.8	85.2	3	
PHF	.864	.890	.670	.898	.500	.768	.788	.812	.911	.816	.583	.815	.850	.882	.361	.898

Counts Unlimited Inc.
PO Box 1178
Corona, CA 92878
(951) 268-6268

City of San Bernardino
N/S: "E" Street
E/W: Rialto Avenue
Weather: Sunny

File Name : SBCERIAM
Site Code : 11045063
Start Date : 2/24/2011
Page No : 1

Groups Printed- Total Volume

	"E" Street Southbound				Rialto Avenue Westbound				"E" Street Northbound				Rialto Avenue Eastbound				
Start Time	Left	Thru	Right	App. Total	Left	Thru	Right	App. Total	Left	Thru	Right	App. Total	Left	Thru	Right	App. Total	Int. Total
07:00 AM	3	21	3	27	1	30	1	32	5	23	6	34	2	62	7	71	164
07:15 AM	6	30	4	40	2	43	2	47	5	43	8	56	11	76	11	98	241
07:30 AM	5	42	5	52	6	61	2	69	9	40	11	60	9	86	19	114	295
07:45 AM	8	68	6	82	6	60	2	68	10	59	15	84	6	138	21	165	399
Total	22	161	18	201	15	194	7	216	29	165	40	234	28	362	58	448	1099
08:00 AM	7	43	6	56	8	61	6	75	8	44	14	66	7	83	13	103	300
08:15 AM	3	32	3	38	2	37	7	46	9	38	8	55	3	80	21	104	243
08:30 AM	6	42	10	58	6	59	3	68	13	40	13	66	7	72	13	92	284
08:45 AM	7	37	3	47	5	68	2	75	7	28	9	44	5	59	13	77	243
Total	23	154	22	199	21	225	18	264	37	150	44	231	22	294	60	376	1070
Grand Total	45	315	40	400	36	419	25	480	66	315	84	465	50	656	118	824	2169
Apprch %	11.2	78.8	10		7.5	87.3	5.2		14.2	67.7	18.1		6.1	79.6	14.3		
Total %	2.1	14.5	1.8	18.4	1.7	19.3	1.2	22.1	3	14.5	3.9	21.4	2.3	30.2	5.4	38	

	"E" Street Southbound				Rialto Avenue Westbound				"E" Street Northbound				Rialto Avenue Eastbound				
Start Time	Left	Thru	Right	App. Total	Left	Thru	Right	App. Total	Left	Thru	Right	App. Total	Left	Thru	Right	App. Total	Int. Total
Peak Hour Analysis From 07:00 AM to 08:45 AM - Peak 1 of 1																	
Peak Hour for Entire Intersection Begins at 07:30 AM																	
07:30 AM	5	42	5	52	6	**61**	2	69	9	40	11	60	**9**	86	19	114	295
07:45 AM	**8**	**68**	**6**	**82**	6	60	2	68	**10**	**59**	**15**	**84**	6	**138**	**21**	**165**	**399**
08:00 AM	7	43	6	56	**8**	61	6	**75**	8	44	14	66	7	83	13	103	300
08:15 AM	3	32	3	38	2	37	**7**	46	9	38	8	55	3	80	21	104	243
Total Volume	23	185	20	228	22	219	17	258	36	181	48	265	25	387	74	486	1237
% App. Total	10.1	81.1	8.8		8.5	84.9	6.6		13.6	68.3	18.1		5.1	79.6	15.2		
PHF	.719	.680	.833	.695	.688	.898	.607	.860	.900	.767	.800	.789	.694	.701	.881	.736	.775

Counts Unlimited Inc.
PO Box 1178
Corona, CA 92878
(951) 268-6268

City of San Bernardino
N/S: "E" Street
E/W: Rialto Avenue
Weather: Sunny

File Name : SBCERIAM
Site Code : 11045063
Start Date : 2/24/2011
Page No : 2

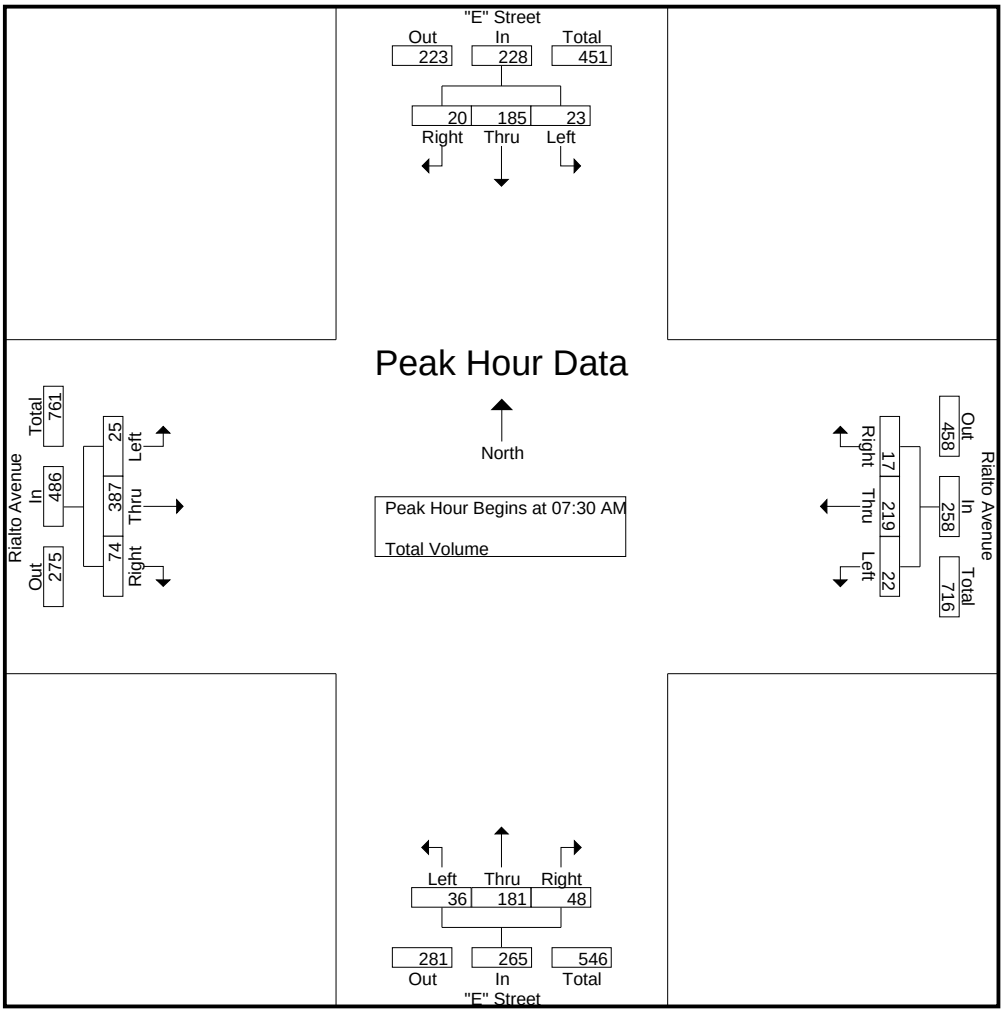

Peak Hour Analysis From 07:00 AM to 08:45 AM - Peak 1 of 1
Peak Hour for Each Approach Begins at:

	07:45 AM				08:00 AM				07:45 AM				07:30 AM			
+0 mins.	**8**	**68**	6	**82**	**8**	61	6	**75**	10	**59**	**15**	**84**	**9**	86	19	114
+15 mins.	7	43	6	56	2	37	**7**	46	8	44	14	66	6	**138**	**21**	**165**
+30 mins.	3	32	3	38	6	59	3	68	9	38	8	55	7	83	13	103
+45 mins.	6	42	**10**	58	5	**68**	2	75	**13**	40	13	66	3	80	21	104
Total Volume	24	185	25	234	21	225	18	264	40	181	50	271	25	387	74	486
% App. Total	10.3	79.1	10.7		8	85.2	6.8		14.8	66.8	18.5		5.1	79.6	15.2	
PHF	.750	.680	.625	.713	.656	.827	.643	.880	.769	.767	.833	.807	.694	.701	.881	.736

Counts Unlimited Inc.
PO Box 1178
Corona, CA 92878
(951) 268-6268

City of San Bernardino
N/S: "E" Street
E/W: Rialto Avenue
Weather: Sunny

File Name : SBCERIPM
Site Code : 11045063
Start Date : 2/24/2011
Page No : 1

Groups Printed- Total Volume

	"E" Street Southbound				Rialto Avenue Westbound				"E" Street Northbound				Rialto Avenue Eastbound				
Start Time	Left	Thru	Right	App. Total	Left	Thru	Right	App. Total	Left	Thru	Right	App. Total	Left	Thru	Right	App. Total	Int. Total
04:00 PM	3	87	9	99	17	88	11	116	13	111	29	153	7	73	21	101	469
04:15 PM	2	100	9	111	15	100	9	124	22	116	22	160	6	72	8	86	481
04:30 PM	13	89	16	118	13	111	2	126	34	137	17	188	4	74	15	93	525
04:45 PM	7	89	14	110	17	101	5	123	19	134	18	171	5	77	24	106	510
Total	25	365	48	438	62	400	27	489	88	498	86	672	22	296	68	386	1985
05:00 PM	2	95	6	103	23	158	8	189	27	112	13	152	6	75	22	103	547
05:15 PM	5	71	7	83	26	103	6	135	24	146	18	188	3	76	23	102	508
05:30 PM	9	85	7	101	13	107	3	123	24	118	14	156	10	79	19	108	488
05:45 PM	7	62	9	78	12	79	4	95	18	93	8	119	9	74	27	110	402
Total	23	313	29	365	74	447	21	542	93	469	53	615	28	304	91	423	1945
Grand Total	48	678	77	803	136	847	48	1031	181	967	139	1287	50	600	159	809	3930
Apprch %	6	84.4	9.6		13.2	82.2	4.7		14.1	75.1	10.8		6.2	74.2	19.7		
Total %	1.2	17.3	2	20.4	3.5	21.6	1.2	26.2	4.6	24.6	3.5	32.7	1.3	15.3	4	20.6	

	"E" Street Southbound				Rialto Avenue Westbound				"E" Street Northbound				Rialto Avenue Eastbound				
Start Time	Left	Thru	Right	App. Total	Left	Thru	Right	App. Total	Left	Thru	Right	App. Total	Left	Thru	Right	App. Total	Int. Total
Peak Hour Analysis From 04:00 PM to 05:45 PM - Peak 1 of 1																	
Peak Hour for Entire Intersection Begins at 04:30 PM																	
04:30 PM	**13**	89	**16**	**118**	13	111	2	126	**34**	137	17	**188**	4	74	15	93	525
04:45 PM	7	89	14	110	17	101	5	123	19	134	**18**	171	5	**77**	**24**	**106**	510
05:00 PM	2	**95**	6	103	23	**158**	**8**	**189**	27	112	13	152	**6**	75	22	103	**547**
05:15 PM	5	71	7	83	**26**	103	6	135	24	**146**	18	188	3	76	23	102	508
Total Volume	27	344	43	414	79	473	21	573	104	529	66	699	18	302	84	404	2090
% App. Total	6.5	83.1	10.4		13.8	82.5	3.7		14.9	75.7	9.4		4.5	74.8	20.8		
PHF	.519	.905	.672	.877	.760	.748	.656	.758	.765	.906	.917	.930	.750	.981	.875	.953	.955

Counts Unlimited Inc.
PO Box 1178
Corona, CA 92878
(951) 268-6268

City of San Bernardino
N/S: "E" Street
E/W: Rialto Avenue
Weather: Sunny

File Name : SBCERIPM
Site Code : 11045063
Start Date : 2/24/2011
Page No : 2

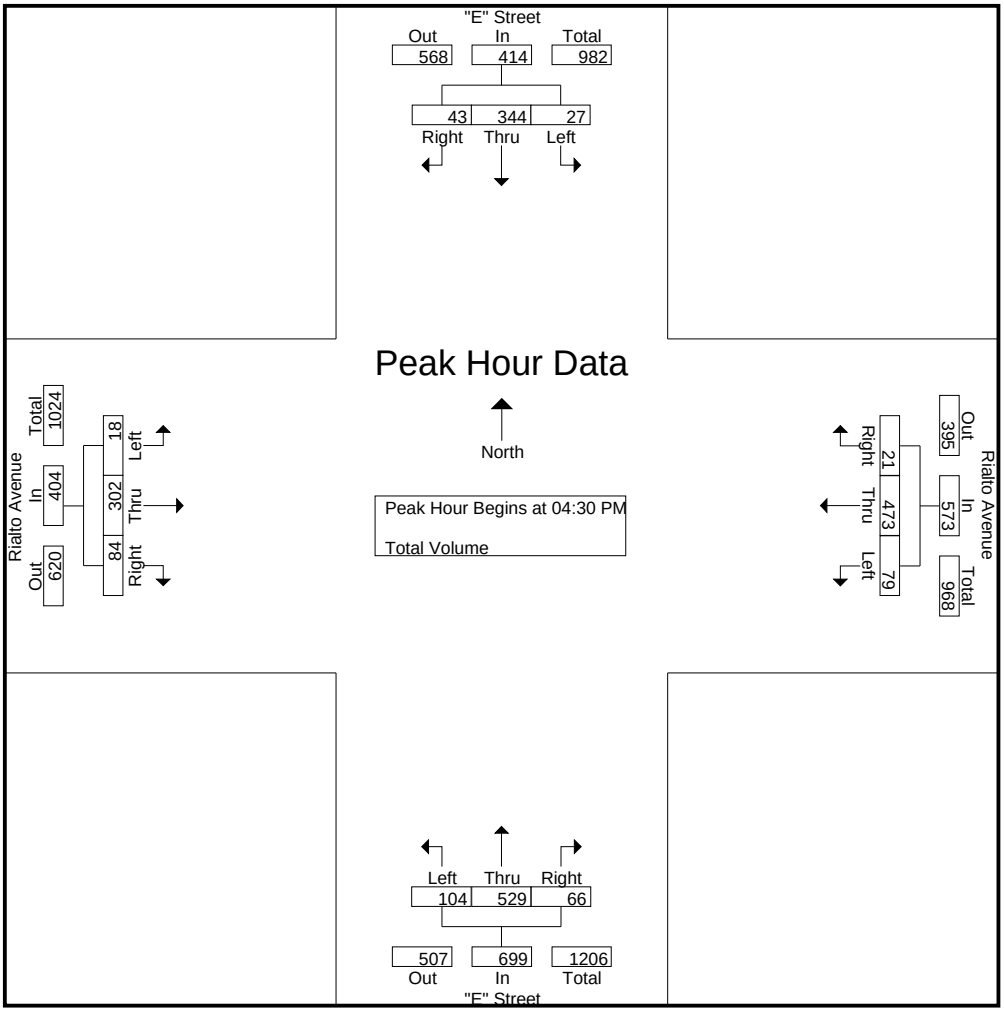

Peak Hour Analysis From 04:00 PM to 05:45 PM - Peak 1 of 1

Peak Hour for Each Approach Begins at:

	04:15 PM				04:30 PM				04:30 PM				05:00 PM			
+0 mins.	2	**100**	9	111	13	111	2	126	**34**	137	17	**188**	6	75	22	103
+15 mins.	**13**	89	**16**	**118**	17	101	5	123	19	134	**18**	171	3	76	23	102
+30 mins.	7	89	14	110	23	**158**	**8**	**189**	27	112	13	152	**10**	**79**	19	108
+45 mins.	2	95	6	103	**26**	103	6	135	24	**146**	18	188	9	74	**27**	**110**
Total Volume	24	373	45	442	79	473	21	573	104	529	66	699	28	304	91	423
% App. Total	5.4	84.4	10.2		13.8	82.5	3.7		14.9	75.7	9.4		6.6	71.9	21.5	
PHF	.462	.933	.703	.936	.760	.748	.656	.758	.765	.906	.917	.930	.700	.962	.843	.961

Counts Unlimited, Inc.
PO Box 1178
Corona, CA 92878
(951) 268-6268

City of San Bernardino
N/S: G Street
E/W: Congress Street
Weather: Sunny

File Name : SBCGCOAM
Site Code : 11111066
Start Date : 4/27/2011
Page No : 1

Groups Printed- Total Volume

	G Street Southbound				Congress Street Westbound				G Street Northbound				Congress Street Eastbound				
Start Time	Left	Thru	Right	App. Total	Left	Thru	Right	App. Total	Left	Thru	Right	App. Total	Left	Thru	Right	App. Total	Int. Total
07:00 AM	0	22	4	26	0	0	0	0	1	16	0	17	0	0	0	0	43
07:15 AM	0	22	3	25	0	0	0	0	0	12	0	12	1	0	1	2	39
07:30 AM	0	19	0	19	0	0	0	0	0	25	0	25	1	0	1	2	46
07:45 AM	0	46	1	47	0	0	0	0	0	39	0	39	1	0	1	2	88
Total	0	109	8	117	0	0	0	0	1	92	0	93	3	0	3	6	216
08:00 AM	0	53	0	53	0	0	0	0	0	19	0	19	2	0	2	4	76
08:15 AM	0	52	1	53	0	0	0	0	0	19	0	19	2	0	0	2	74
08:30 AM	0	49	1	50	0	0	0	0	0	22	0	22	0	0	0	0	72
08:45 AM	0	31	0	31	0	0	0	0	0	18	0	18	3	0	0	3	52
Total	0	185	2	187	0	0	0	0	0	78	0	78	7	0	2	9	274
Grand Total	0	294	10	304	0	0	0	0	1	170	0	171	10	0	5	15	490
Apprch %	0	96.7	3.3		0	0	0		0.6	99.4	0		66.7	0	33.3		
Total %	0	60	2	62	0	0	0	0	0.2	34.7	0	34.9	2	0	1	3.1	

	G Street Southbound				Congress Street Westbound				G Street Northbound				Congress Street Eastbound				
Start Time	Left	Thru	Right	App. Total	Left	Thru	Right	App. Total	Left	Thru	Right	App. Total	Left	Thru	Right	App. Total	Int. Total
Peak Hour Analysis From 07:00 AM to 08:45 AM - Peak 1 of 1																	
Peak Hour for Entire Intersection Begins at 07:45 AM																	
07:45 AM	0	46	**1**	47	0	0	0	0	0	**39**	0	**39**	1	0	1	2	**88**
08:00 AM	0	**53**	0	**53**	0	0	0	0	0	19	0	19	**2**	0	**2**	**4**	76
08:15 AM	0	52	1	53	0	0	0	0	0	19	0	19	2	0	0	2	74
08:30 AM	0	49	1	50	0	0	0	0	0	22	0	22	0	0	0	0	72
Total Volume	0	200	3	203	0	0	0	0	0	99	0	99	5	0	3	8	310
% App. Total	0	98.5	1.5		0	0	0		0	100	0		62.5	0	37.5		
PHF	.000	.943	.750	.958	.000	.000	.000	.000	.000	.635	.000	.635	.625	.000	.375	.500	.881

Counts Unlimited, Inc.
PO Box 1178
Corona, CA 92878
(951) 268-6268

City of San Bernardino
N/S: G Street
E/W: Congress Street
Weather: Sunny

File Name : SBCGCOAM
Site Code : 11111066
Start Date : 4/27/2011
Page No : 2

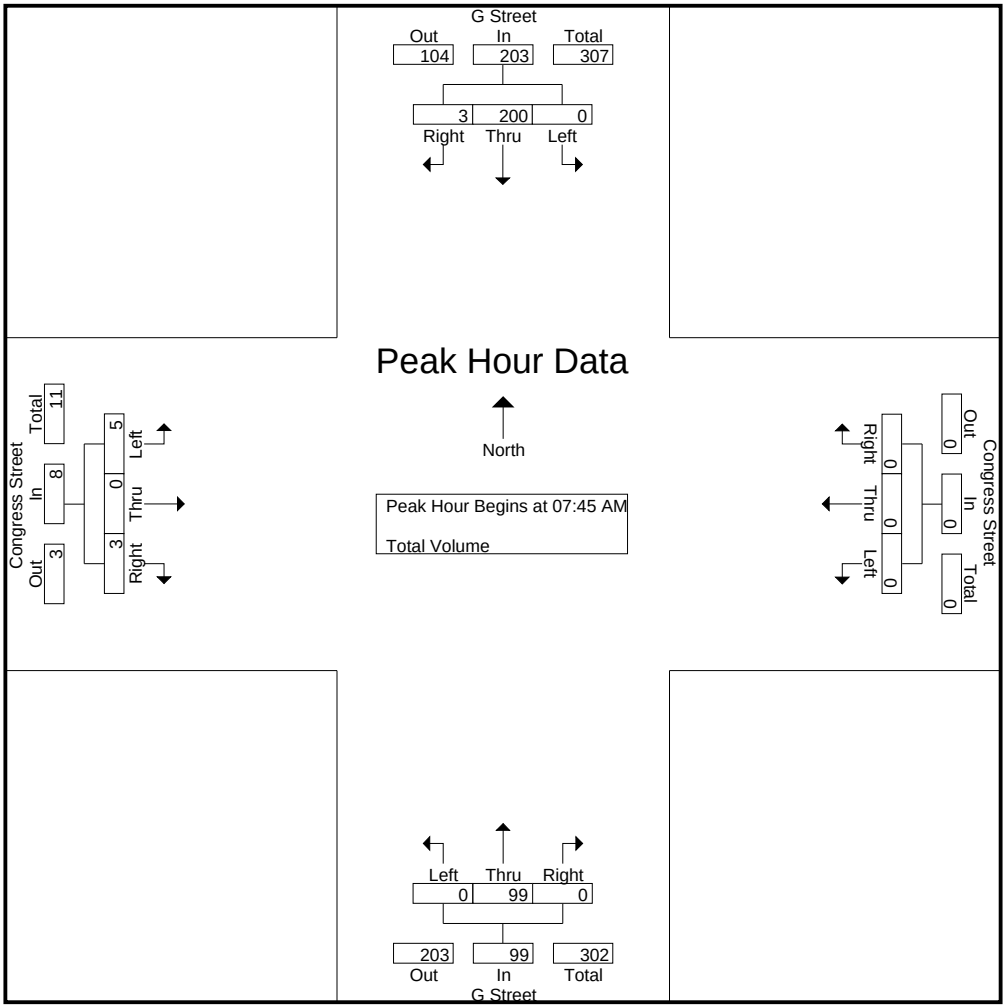

Peak Hour Analysis From 07:00 AM to 08:45 AM - Peak 1 of 1
Peak Hour for Each Approach Begins at:

	07:45 AM				07:00 AM				07:30 AM				07:15 AM			
+0 mins.	0	46	**1**	47	0	0	0	0	0	25	0	25	1	0	1	2
+15 mins.	0	**53**	0	**53**	0	0	0	0	0	**39**	0	**39**	1	0	1	2
+30 mins.	0	52	1	53	0	0	0	0	0	19	0	19	1	0	1	2
+45 mins.	0	49	1	50	0	0	0	0	0	19	0	19	**2**	0	**2**	**4**
Total Volume	0	200	3	203	0	0	0	0	0	102	0	102	5	0	5	10
% App. Total	0	98.5	1.5		0	0	0		0	100	0		50	0	50	
PHF	.000	.943	.750	.958	.000	.000	.000	.000	.000	.654	.000	.654	.625	.000	.625	.625

Counts Unlimited, Inc.
PO Box 1178
Corona, CA 92878
(951) 268-6268

City of San Bernardino
N/S: G Street
E/W: Congress Street
Weather: Sunny

File Name : SBCGCOPM
Site Code : 11111066
Start Date : 4/27/2011
Page No : 1

Groups Printed- Total Volume

	G Street Southbound				Congress Street Westbound				G Street Northbound				Congress Street Eastbound				
Start Time	Left	Thru	Right	App. Total	Left	Thru	Right	App. Total	Left	Thru	Right	App. Total	Left	Thru	Right	App. Total	Int. Total
04:00 PM	0	52	4	56	0	0	0	0	1	48	0	49	0	0	3	3	108
04:15 PM	0	54	0	54	0	0	0	0	0	44	0	44	3	0	1	4	102
04:30 PM	0	44	0	44	0	0	0	0	0	38	0	38	0	0	1	1	83
04:45 PM	0	45	0	45	0	0	0	0	0	44	0	44	0	0	1	1	90
Total	0	195	4	199	0	0	0	0	1	174	0	175	3	0	6	9	383
05:00 PM	0	56	0	56	0	0	0	0	0	45	0	45	2	0	1	3	104
05:15 PM	0	44	0	44	0	0	0	0	0	59	0	59	0	0	0	0	103
05:30 PM	0	43	0	43	0	0	0	0	0	53	0	53	0	0	0	0	96
05:45 PM	0	37	1	38	0	0	0	0	0	45	0	45	0	0	0	0	83
Total	0	180	1	181	0	0	0	0	0	202	0	202	2	0	1	3	386
Grand Total	0	375	5	380	0	0	0	0	1	376	0	377	5	0	7	12	769
Apprch %	0	98.7	1.3		0	0	0		0.3	99.7	0		41.7	0	58.3		
Total %	0	48.8	0.7	49.4	0	0	0	0	0.1	48.9	0	49	0.7	0	0.9	1.6	

	G Street Southbound				Congress Street Westbound				G Street Northbound				Congress Street Eastbound				
Start Time	Left	Thru	Right	App. Total	Left	Thru	Right	App. Total	Left	Thru	Right	App. Total	Left	Thru	Right	App. Total	Int. Total
Peak Hour Analysis From 04:00 PM to 05:45 PM - Peak 1 of 1																	
Peak Hour for Entire Intersection Begins at 04:45 PM																	
04:45 PM	0	45	0	45	0	0	0	0	0	44	0	44	0	0	**1**	1	90
05:00 PM	0	**56**	0	**56**	0	0	0	0	0	45	0	45	**2**	0	1	**3**	**104**
05:15 PM	0	44	0	44	0	0	0	0	0	**59**	0	**59**	0	0	0	0	103
05:30 PM	0	43	0	43	0	0	0	0	0	53	0	53	0	0	0	0	96
Total Volume	0	188	0	188	0	0	0	0	0	201	0	201	2	0	2	4	393
% App. Total	0	100	0		0	0	0		0	100	0		50	0	50		
PHF	.000	.839	.000	.839	.000	.000	.000	.000	.000	.852	.000	.852	.250	.000	.500	.333	.945

Counts Unlimited, Inc.
PO Box 1178
Corona, CA 92878
(951) 268-6268

City of San Bernardino
N/S: G Street
E/W: Congress Street
Weather: Sunny

File Name : SBCGCOPM
Site Code : 11111066
Start Date : 4/27/2011
Page No : 2

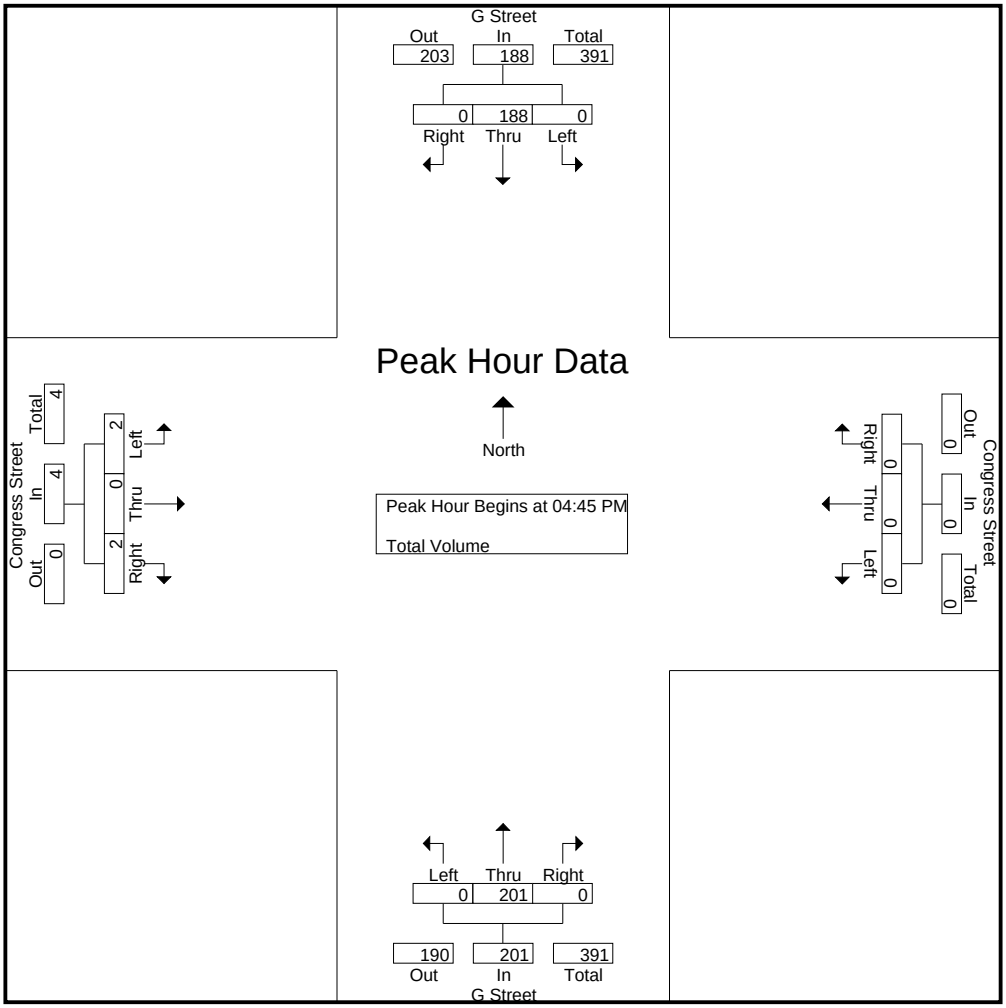

Peak Hour Analysis From 04:00 PM to 05:45 PM - Peak 1 of 1
Peak Hour for Each Approach Begins at:

	04:00 PM				04:00 PM				05:00 PM				04:00 PM			
+0 mins.	0	52	**4**	**56**	0	0	0	0	0	45	0	45	0	0	**3**	3
+15 mins.	0	**54**	0	54	0	0	0	0	0	**59**	0	**59**	**3**	0	1	**4**
+30 mins.	0	44	0	44	0	0	0	0	0	53	0	53	0	0	1	1
+45 mins.	0	45	0	45	0	0	0	0	0	45	0	45	0	0	1	1
Total Volume	0	195	4	199	0	0	0	0	0	202	0	202	3	0	6	9
% App. Total	0	98	2		0	0	0		0	100	0		33.3	0	66.7	
PHF	.000	.903	.250	.888	.000	.000	.000	.000	.000	.856	.000	.856	.250	.000	.500	.563

Counts Unlimited, Inc.
PO Box 1178
Corona, CA 92878
(951) 268-6268

City of San Bernardino
N/S: E Street
E/W: 2nd Street
Weather: Sunny

File Name : SBCE2AM
Site Code : 11111035
Start Date : 4/27/2011
Page No : 1

Groups Printed- Total Volume

	E Street Southbound				2nd Street Westbound				E Street Northbound				2nd Street Eastbound				
Start Time	Left	Thru	Right	App. Total	Left	Thru	Right	App. Total	Left	Thru	Right	App. Total	Left	Thru	Right	App. Total	Int. Total
07:00 AM	4	20	9	33	2	72	1	75	3	24	10	37	48	191	7	246	391
07:15 AM	7	41	19	67	6	69	3	78	5	29	15	49	71	265	3	339	533
07:30 AM	5	45	31	81	4	85	2	91	6	24	16	46	51	256	4	311	529
07:45 AM	5	66	19	90	11	91	2	104	7	29	17	53	55	264	14	333	580
Total	21	172	78	271	23	317	8	348	21	106	58	185	225	976	28	1229	2033
08:00 AM	8	63	14	85	8	77	4	89	8	32	24	64	46	177	5	228	466
08:15 AM	10	92	19	121	5	103	5	113	9	34	9	52	50	204	10	264	550
08:30 AM	17	80	30	127	8	86	6	100	12	41	9	62	47	199	10	256	545
08:45 AM	9	73	36	118	16	104	6	126	9	42	15	66	45	189	10	244	554
Total	44	308	99	451	37	370	21	428	38	149	57	244	188	769	35	992	2115
Grand Total	65	480	177	722	60	687	29	776	59	255	115	429	413	1745	63	2221	4148
Apprch %	9	66.5	24.5		7.7	88.5	3.7		13.8	59.4	26.8		18.6	78.6	2.8		
Total %	1.6	11.6	4.3	17.4	1.4	16.6	0.7	18.7	1.4	6.1	2.8	10.3	10	42.1	1.5	53.5	

	E Street Southbound				2nd Street Westbound				E Street Northbound				2nd Street Eastbound				
Start Time	Left	Thru	Right	App. Total	Left	Thru	Right	App. Total	Left	Thru	Right	App. Total	Left	Thru	Right	App. Total	Int. Total
Peak Hour Analysis From 07:00 AM to 08:45 AM - Peak 1 of 1																	
Peak Hour for Entire Intersection Begins at 07:45 AM																	
07:45 AM	5	66	19	90	**11**	91	2	104	7	29	17	53	**55**	**264**	**14**	**333**	**580**
08:00 AM	8	63	14	85	8	77	4	89	8	32	**24**	**64**	46	177	5	228	466
08:15 AM	10	**92**	19	121	5	**103**	5	**113**	9	34	9	52	50	204	10	264	550
08:30 AM	**17**	80	**30**	**127**	8	86	**6**	100	**12**	**41**	9	62	47	199	10	256	545
Total Volume	40	301	82	423	32	357	17	406	36	136	59	231	198	844	39	1081	2141
% App. Total	9.5	71.2	19.4		7.9	87.9	4.2		15.6	58.9	25.5		18.3	78.1	3.6		
PHF	.588	.818	.683	.833	.727	.867	.708	.898	.750	.829	.615	.902	.900	.799	.696	.812	.923

Counts Unlimited, Inc.
PO Box 1178
Corona, CA 92878
(951) 268-6268

City of San Bernardino
N/S: E Street
E/W: 2nd Street
Weather: Sunny

File Name : SBCE2AM
Site Code : 11111035
Start Date : 4/27/2011
Page No : 2

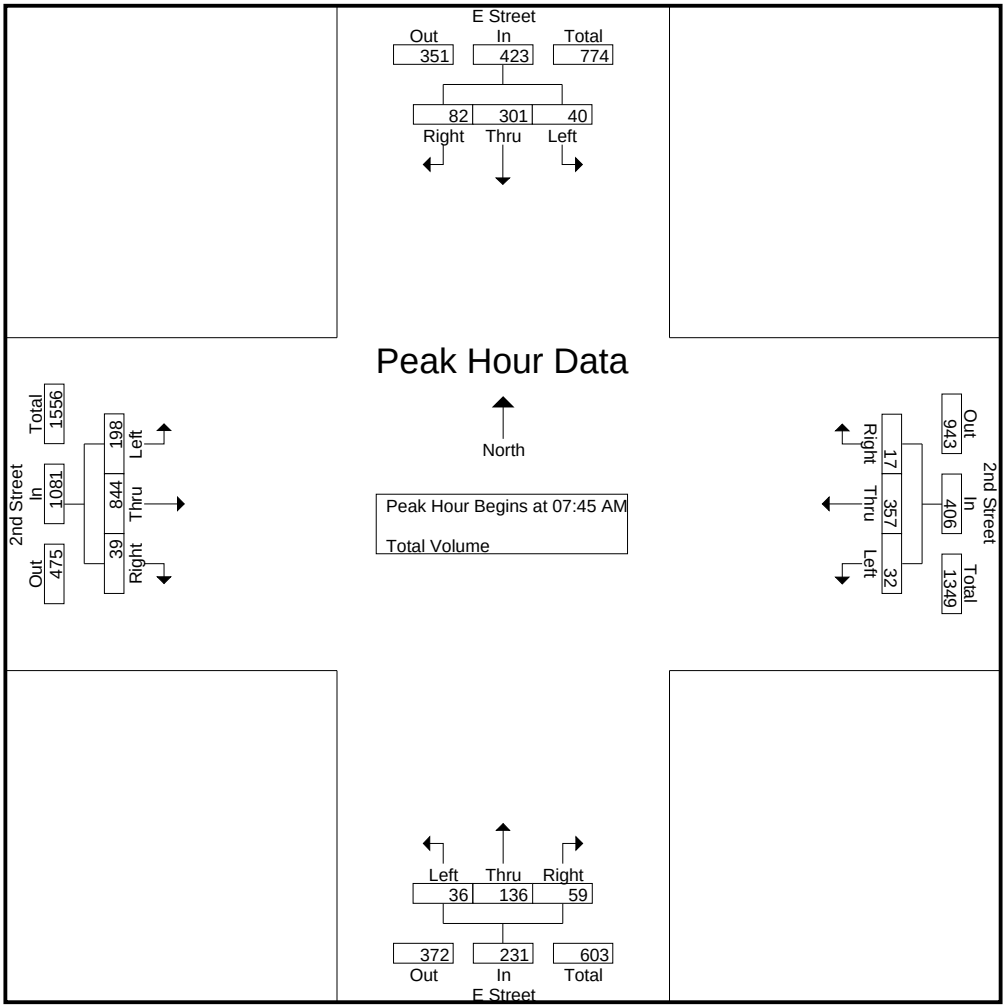

Peak Hour Analysis From 07:00 AM to 08:45 AM - Peak 1 of 1
Peak Hour for Each Approach Begins at:

	08:00 AM				08:00 AM				08:00 AM				07:00 AM			
+0 mins.	8	63	14	85	8	77	4	89	8	32	**24**	64	48	191	7	246
+15 mins.	10	**92**	19	121	5	103	5	113	9	34	9	52	**71**	**265**	3	**339**
+30 mins.	**17**	80	30	**127**	8	86	**6**	100	**12**	41	9	62	51	256	4	311
+45 mins.	9	73	**36**	118	**16**	**104**	6	**126**	9	**42**	15	**66**	55	264	**14**	333
Total Volume	44	308	99	451	37	370	21	428	38	149	57	244	225	976	28	1229
% App. Total	9.8	68.3	22		8.6	86.4	4.9		15.6	61.1	23.4		18.3	79.4	2.3	
PHF	.647	.837	.688	.888	.578	.889	.875	.849	.792	.887	.594	.924	.792	.921	.500	.906

Counts Unlimited, Inc.
PO Box 1178
Corona, CA 92878
(951) 268-6268

City of San Bernardino
N/S: E Street
E/W: 2nd Street
Weather: Sunny

File Name : SBCE2PM
Site Code : 11111035
Start Date : 4/27/2011
Page No : 1

Groups Printed- Total Volume

	E Street Southbound				2nd Street Westbound				E Street Northbound				2nd Street Eastbound				
Start Time	Left	Thru	Right	App. Total	Left	Thru	Right	App. Total	Left	Thru	Right	App. Total	Left	Thru	Right	App. Total	Int. Total
04:00 PM	13	78	28	119	39	184	10	233	14	74	13	101	27	122	19	168	621
04:15 PM	7	62	24	93	24	146	5	175	23	77	25	125	18	120	16	154	547
04:30 PM	6	65	44	115	25	248	7	280	23	77	22	122	34	132	15	181	698
04:45 PM	9	55	41	105	16	162	9	187	21	92	16	129	29	125	10	164	585
Total	35	260	137	432	104	740	31	875	81	320	76	477	108	499	60	667	2451
05:00 PM	15	78	49	142	21	266	5	292	25	63	21	109	32	143	14	189	732
05:15 PM	4	56	31	91	22	170	4	196	28	88	33	149	37	112	9	158	594
05:30 PM	5	67	39	111	22	214	7	243	25	86	23	134	42	117	9	168	656
05:45 PM	5	41	14	60	18	125	3	146	14	49	18	81	35	94	7	136	423
Total	29	242	133	404	83	775	19	877	92	286	95	473	146	466	39	651	2405
Grand Total	64	502	270	836	187	1515	50	1752	173	606	171	950	254	965	99	1318	4856
Apprch %	7.7	60	32.3		10.7	86.5	2.9		18.2	63.8	18		19.3	73.2	7.5		
Total %	1.3	10.3	5.6	17.2	3.9	31.2	1	36.1	3.6	12.5	3.5	19.6	5.2	19.9	2	27.1	

	E Street Southbound				2nd Street Westbound				E Street Northbound				2nd Street Eastbound				
Start Time	Left	Thru	Right	App. Total	Left	Thru	Right	App. Total	Left	Thru	Right	App. Total	Left	Thru	Right	App. Total	Int. Total
Peak Hour Analysis From 04:00 PM to 05:45 PM - Peak 1 of 1																	
Peak Hour for Entire Intersection Begins at 04:30 PM																	
04:30 PM	6	65	44	115	**25**	248	7	280	23	77	22	122	34	132	**15**	181	698
04:45 PM	9	55	41	105	16	162	**9**	187	21	**92**	16	129	29	125	10	164	585
05:00 PM	**15**	**78**	**49**	**142**	21	**266**	5	**292**	25	63	21	109	32	**143**	14	**189**	**732**
05:15 PM	4	56	31	91	22	170	4	196	**28**	88	**33**	**149**	**37**	112	9	158	594
Total Volume	34	254	165	453	84	846	25	955	97	320	92	509	132	512	48	692	2609
% App. Total	7.5	56.1	36.4		8.8	88.6	2.6		19.1	62.9	18.1		19.1	74	6.9		
PHF	.567	.814	.842	.798	.840	.795	.694	.818	.866	.870	.697	.854	.892	.895	.800	.915	.891

Counts Unlimited, Inc.
PO Box 1178
Corona, CA 92878
(951) 268-6268

City of San Bernardino
N/S: E Street
E/W: 2nd Street
Weather: Sunny

File Name : SBCE2PM
Site Code : 11111035
Start Date : 4/27/2011
Page No : 2

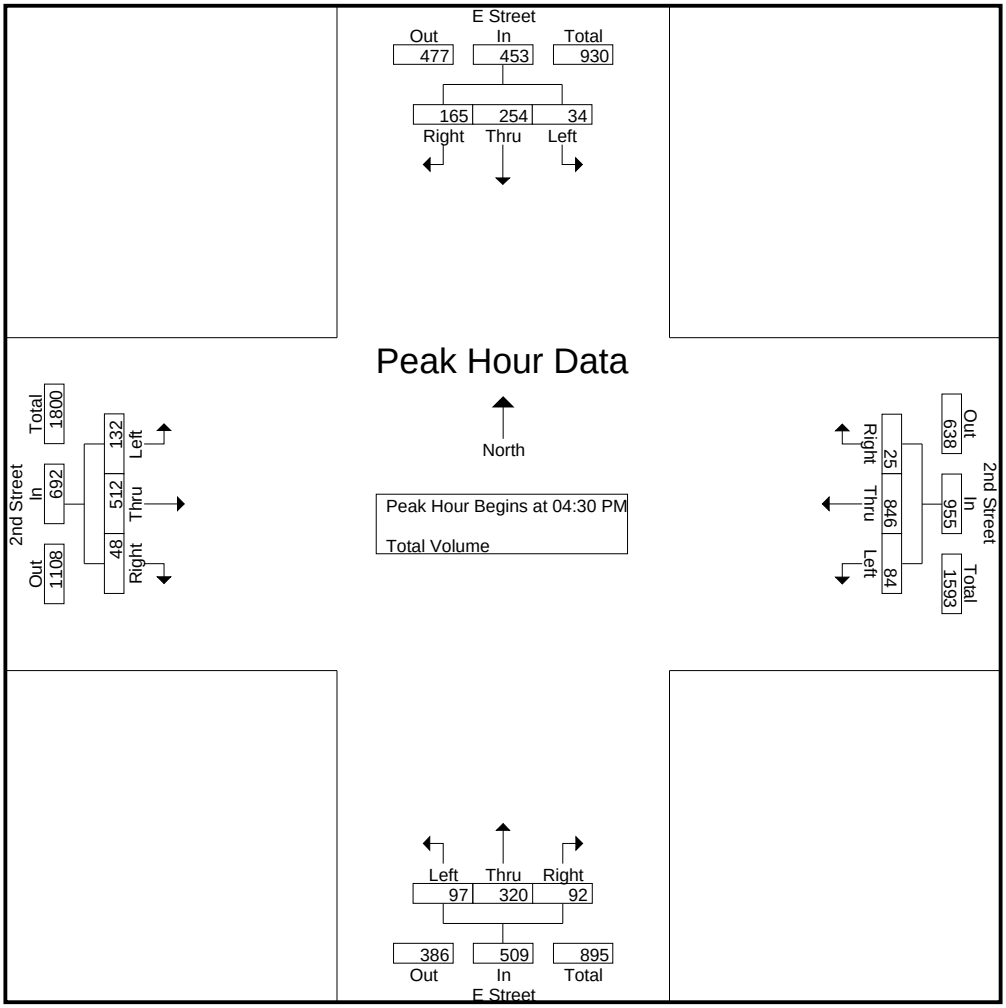

Peak Hour Analysis From 04:00 PM to 05:45 PM - Peak 1 of 1
Peak Hour for Each Approach Begins at:

	04:15 PM				04:30 PM				04:45 PM				04:30 PM			
+0 mins.	7	62	24	93	**25**	248	7	280	21	**92**	16	129	34	132	**15**	181
+15 mins.	6	65	44	115	16	162	**9**	187	25	63	21	109	29	125	10	164
+30 mins.	9	55	41	105	21	**266**	5	**292**	**28**	88	**33**	**149**	32	**143**	14	**189**
+45 mins.	**15**	**78**	**49**	**142**	22	170	4	196	25	86	23	134	**37**	112	9	158
Total Volume	37	260	158	455	84	846	25	955	99	329	93	521	132	512	48	692
% App. Total	8.1	57.1	34.7		8.8	88.6	2.6		19	63.1	17.9		19.1	74	6.9	
PHF	.617	.833	.806	.801	.840	.795	.694	.818	.884	.894	.705	.874	.892	.895	.800	.915

Counts Unlimited, Inc.
PO Box 1178
Corona, CA 92878
(951) 268-6268

City of San Bernardino
N/S: Arrowhead Avenue
E/W: Rialto Avenue
Weather: Sunny

File Name : SBCARRIAM
Site Code : 11111061
Start Date : 4/27/2011
Page No : 1

Groups Printed- Total Volume

	Arrowhead Avenue Southbound				Rialto Avenue Westbound				Arrowhead Avenue Northbound				Rialto Avenue Eastbound				
Start Time	Left	Thru	Right	App. Total	Left	Thru	Right	App. Total	Left	Thru	Right	App. Total	Left	Thru	Right	App. Total	Int. Total
07:00 AM	4	23	5	32	1	40	1	42	7	44	4	55	12	63	15	90	219
07:15 AM	1	43	10	54	5	47	3	55	6	60	5	71	15	63	10	88	268
07:30 AM	2	60	11	73	13	71	2	86	12	56	5	73	12	59	15	86	318
07:45 AM	4	68	4	76	3	57	4	64	8	55	9	72	18	94	24	136	348
Total	11	194	30	235	22	215	10	247	33	215	23	271	57	279	64	400	1153
08:00 AM	4	42	6	52	12	42	2	56	4	50	5	59	19	49	13	81	248
08:15 AM	5	46	3	54	3	57	4	64	7	43	7	57	9	62	15	86	261
08:30 AM	1	49	4	54	11	40	2	53	11	43	8	62	6	54	17	77	246
08:45 AM	2	35	7	44	7	51	2	60	7	37	6	50	13	53	12	78	232
Total	12	172	20	204	33	190	10	233	29	173	26	228	47	218	57	322	987
Grand Total	23	366	50	439	55	405	20	480	62	388	49	499	104	497	121	722	2140
Apprch %	5.2	83.4	11.4		11.5	84.4	4.2		12.4	77.8	9.8		14.4	68.8	16.8		
Total %	1.1	17.1	2.3	20.5	2.6	18.9	0.9	22.4	2.9	18.1	2.3	23.3	4.9	23.2	5.7	33.7	

	Arrowhead Avenue Southbound				Rialto Avenue Westbound				Arrowhead Avenue Northbound				Rialto Avenue Eastbound				
Start Time	Left	Thru	Right	App. Total	Left	Thru	Right	App. Total	Left	Thru	Right	App. Total	Left	Thru	Right	App. Total	Int. Total
Peak Hour Analysis From 07:00 AM to 08:45 AM - Peak 1 of 1																	
Peak Hour for Entire Intersection Begins at 07:15 AM																	
07:15 AM	1	43	10	54	5	47	3	55	6	**60**	5	71	15	63	10	88	268
07:30 AM	2	60	**11**	73	**13**	**71**	2	**86**	**12**	56	5	**73**	12	59	15	86	318
07:45 AM	**4**	**68**	4	**76**	3	57	**4**	64	8	55	**9**	72	18	**94**	**24**	**136**	**348**
08:00 AM	4	42	6	52	12	42	2	56	4	50	5	59	**19**	49	13	81	248
Total Volume	11	213	31	255	33	217	11	261	30	221	24	275	64	265	62	391	1182
% App. Total	4.3	83.5	12.2		12.6	83.1	4.2		10.9	80.4	8.7		16.4	67.8	15.9		
PHF	.688	.783	.705	.839	.635	.764	.688	.759	.625	.921	.667	.942	.842	.705	.646	.719	.849

Counts Unlimited, Inc.
PO Box 1178
Corona, CA 92878
(951) 268-6268

City of San Bernardino
N/S: Arrowhead Avenue
E/W: Rialto Avenue
Weather: Sunny

File Name : SBCARRIAM
Site Code : 11111061
Start Date : 4/27/2011
Page No : 2

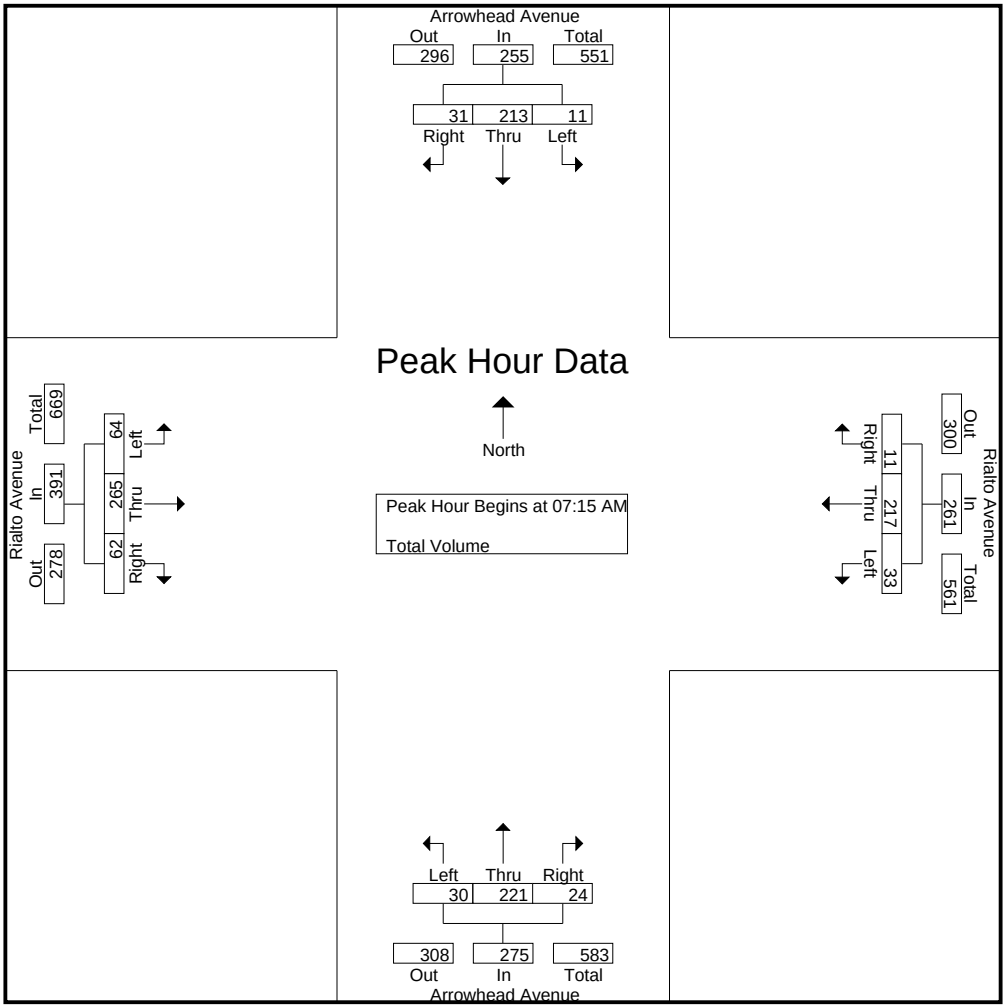

Peak Hour Analysis From 07:00 AM to 08:45 AM - Peak 1 of 1
Peak Hour for Each Approach Begins at:

	07:15 AM				07:30 AM				07:15 AM				07:00 AM			
+0 mins.	1	43	10	54	**13**	**71**	2	**86**	6	**60**	5	71	12	63	15	90
+15 mins.	2	60	**11**	73	3	57	**4**	64	**12**	56	5	**73**	15	63	10	88
+30 mins.	**4**	**68**	4	**76**	12	42	2	56	8	55	**9**	72	12	59	15	86
+45 mins.	4	42	6	52	3	57	4	64	4	50	5	59	**18**	**94**	**24**	**136**
Total Volume	11	213	31	255	31	227	12	270	30	221	24	275	57	279	64	400
% App. Total	4.3	83.5	12.2		11.5	84.1	4.4		10.9	80.4	8.7		14.2	69.8	16	
PHF	.688	.783	.705	.839	.596	.799	.750	.785	.625	.921	.667	.942	.792	.742	.667	.735

Counts Unlimited, Inc.
PO Box 1178
Corona, CA 92878
(951) 268-6268

City of San Bernardino
N/S: Arrowhead Avenue
E/W: Rialto Avenue
Weather: Sunny

File Name : SBCARRIPM
Site Code : 11111061
Start Date : 4/27/2011
Page No : 1

Groups Printed- Total Volume

	Arrowhead Avenue Southbound				Rialto Avenue Westbound				Arrowhead Avenue Northbound				Rialto Avenue Eastbound				
Start Time	Left	Thru	Right	App. Total	Left	Thru	Right	App. Total	Left	Thru	Right	App. Total	Left	Thru	Right	App. Total	Int. Total
04:00 PM	6	68	8	82	2	79	2	83	22	89	10	121	4	66	15	85	371
04:15 PM	4	38	10	52	7	61	1	69	30	67	4	101	4	60	18	82	304
04:30 PM	3	63	15	81	11	74	4	89	17	93	9	119	7	72	15	94	383
04:45 PM	3	49	7	59	4	71	1	76	15	80	15	110	11	81	16	108	353
Total	16	218	40	274	24	285	8	317	84	329	38	451	26	279	64	369	1411
05:00 PM	3	97	20	120	6	123	6	135	34	106	10	150	8	58	18	84	489
05:15 PM	4	53	8	65	3	65	4	72	15	77	8	100	6	65	9	80	317
05:30 PM	2	68	8	78	8	92	3	103	15	67	10	92	6	53	23	82	355
05:45 PM	6	48	2	56	5	54	3	62	13	49	14	76	1	65	12	78	272
Total	15	266	38	319	22	334	16	372	77	299	42	418	21	241	62	324	1433
Grand Total	31	484	78	593	46	619	24	689	161	628	80	869	47	520	126	693	2844
Apprch %	5.2	81.6	13.2		6.7	89.8	3.5		18.5	72.3	9.2		6.8	75	18.2		
Total %	1.1	17	2.7	20.9	1.6	21.8	0.8	24.2	5.7	22.1	2.8	30.6	1.7	18.3	4.4	24.4	

	Arrowhead Avenue Southbound				Rialto Avenue Westbound				Arrowhead Avenue Northbound				Rialto Avenue Eastbound				
Start Time	Left	Thru	Right	App. Total	Left	Thru	Right	App. Total	Left	Thru	Right	App. Total	Left	Thru	Right	App. Total	Int. Total
Peak Hour Analysis From 04:00 PM to 05:45 PM - Peak 1 of 1																	
Peak Hour for Entire Intersection Begins at 04:30 PM																	
04:30 PM	3	63	15	81	**11**	74	4	89	17	93	9	119	7	72	15	94	383
04:45 PM	3	49	7	59	4	71	1	76	15	80	**15**	110	**11**	**81**	16	**108**	353
05:00 PM	3	**97**	**20**	**120**	6	**123**	**6**	**135**	**34**	**106**	10	**150**	8	58	**18**	84	**489**
05:15 PM	**4**	53	8	65	3	65	4	72	15	77	8	100	6	65	9	80	317
Total Volume	13	262	50	325	24	333	15	372	81	356	42	479	32	276	58	366	1542
% App. Total	4	80.6	15.4		6.5	89.5	4		16.9	74.3	8.8		8.7	75.4	15.8		
PHF	.813	.675	.625	.677	.545	.677	.625	.689	.596	.840	.700	.798	.727	.852	.806	.847	.788

Counts Unlimited, Inc.
PO Box 1178
Corona, CA 92878
(951) 268-6268

City of San Bernardino
N/S: Arrowhead Avenue
E/W: Rialto Avenue
Weather: Sunny

File Name : SBCARRIPM
Site Code : 11111061
Start Date : 4/27/2011
Page No : 2

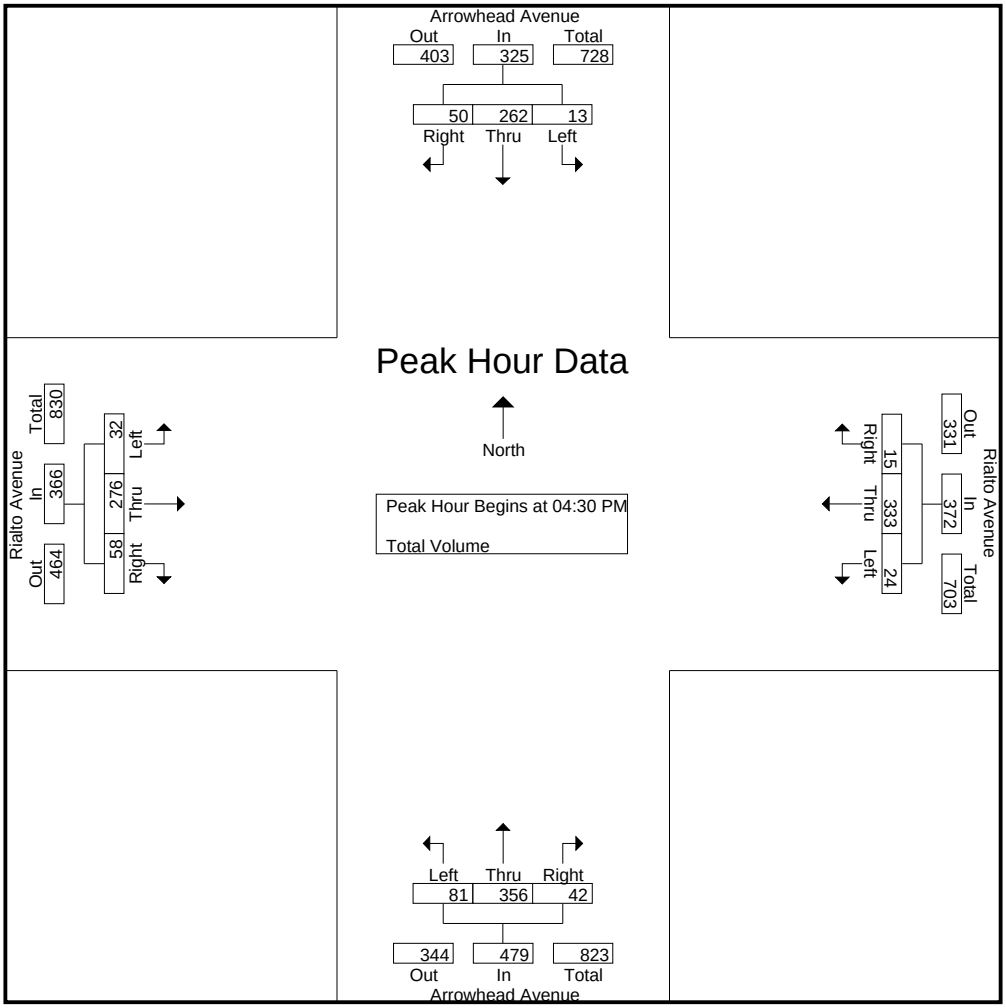

Peak Hour Analysis From 04:00 PM to 05:45 PM - Peak 1 of 1
Peak Hour for Each Approach Begins at:

	04:30 PM				04:45 PM				04:15 PM				04:00 PM			
+0 mins.	3	63	15	81	4	71	1	76	30	67	4	101	4	66	15	85
+15 mins.	3	49	7	59	6	**123**	**6**	**135**	17	93	9	119	4	60	**18**	82
+30 mins.	3	**97**	**20**	**120**	3	65	4	72	15	80	**15**	110	7	72	15	94
+45 mins.	**4**	53	8	65	**8**	92	3	103	**34**	**106**	10	**150**	**11**	**81**	16	**108**
Total Volume	13	262	50	325	21	351	14	386	96	346	38	480	26	279	64	369
% App. Total	4	80.6	15.4		5.4	90.9	3.6		20	72.1	7.9		7	75.6	17.3	
PHF	.813	.675	.625	.677	.656	.713	.583	.715	.706	.816	.633	.800	.591	.861	.889	.854

Counts Unlimited Inc.
PO Box 1178
Corona, CA 92878
(951) 268-6268

City of San Bernardino
N/S: H Street
E/W: 5th Street
Weather: Sunny

File Name : SBCH5AM
Site Code : 00000009
Start Date : 12/14/2011
Page No : 1

Groups Printed- Total Volume

	H Street Southbound				5th Street Westbound				H Street Northbound				5th Street Eastbound				
Start Time	Left	Thru	Right	App. Total	Left	Thru	Right	App. Total	Left	Thru	Right	App. Total	Left	Thru	Right	App. Total	Int. Total
07:00 AM	2	30	5	37	7	44	1	52	24	13	5	42	6	145	76	227	358
07:15 AM	5	49	10	64	5	57	0	62	24	25	10	59	4	193	94	291	476
07:30 AM	8	59	13	80	5	72	2	79	29	20	10	59	13	234	75	322	540
07:45 AM	9	47	11	67	12	83	2	97	41	39	6	86	7	216	82	305	555
Total	24	185	39	248	29	256	5	290	118	97	31	246	30	788	327	1145	1929
08:00 AM	4	31	16	51	6	64	4	74	32	29	10	71	4	175	69	248	444
08:15 AM	3	41	12	56	8	83	0	91	41	27	10	78	13	155	55	223	448
08:30 AM	9	23	11	43	7	59	2	68	38	27	11	76	13	161	44	218	405
08:45 AM	6	39	13	58	7	79	3	89	41	45	4	90	14	148	44	206	443
Total	22	134	52	208	28	285	9	322	152	128	35	315	44	639	212	895	1740
Grand Total	46	319	91	456	57	541	14	612	270	225	66	561	74	1427	539	2040	3669
Apprch %	10.1	70	20		9.3	88.4	2.3		48.1	40.1	11.8		3.6	70	26.4		
Total %	1.3	8.7	2.5	12.4	1.6	14.7	0.4	16.7	7.4	6.1	1.8	15.3	2	38.9	14.7	55.6	

	H Street Southbound				5th Street Westbound				H Street Northbound				5th Street Eastbound				
Start Time	Left	Thru	Right	App. Total	Left	Thru	Right	App. Total	Left	Thru	Right	App. Total	Left	Thru	Right	App. Total	Int. Total
Peak Hour Analysis From 07:00 AM to 08:45 AM - Peak 1 of 1																	
Peak Hour for Entire Intersection Begins at 07:15 AM																	
07:15 AM	5	49	10	64	5	57	0	62	24	25	**10**	59	4	193	**94**	291	476
07:30 AM	8	**59**	13	**80**	5	72	2	79	29	20	10	59	**13**	**234**	75	**322**	540
07:45 AM	**9**	47	11	67	**12**	**83**	2	**97**	**41**	**39**	6	**86**	7	216	82	305	**555**
08:00 AM	4	31	**16**	51	6	64	**4**	74	32	29	10	71	4	175	69	248	444
Total Volume	26	186	50	262	28	276	8	312	126	113	36	275	28	818	320	1166	2015
% App. Total	9.9	71	19.1		9	88.5	2.6		45.8	41.1	13.1		2.4	70.2	27.4		
PHF	.722	.788	.781	.819	.583	.831	.500	.804	.768	.724	.900	.799	.538	.874	.851	.905	.908

Counts Unlimited Inc.
PO Box 1178
Corona, CA 92878
(951) 268-6268

City of San Bernardino
N/S: H Street
E/W: 5th Street
Weather: Sunny

File Name : SBCH5AM
Site Code : 00000009
Start Date : 12/14/2011
Page No : 2

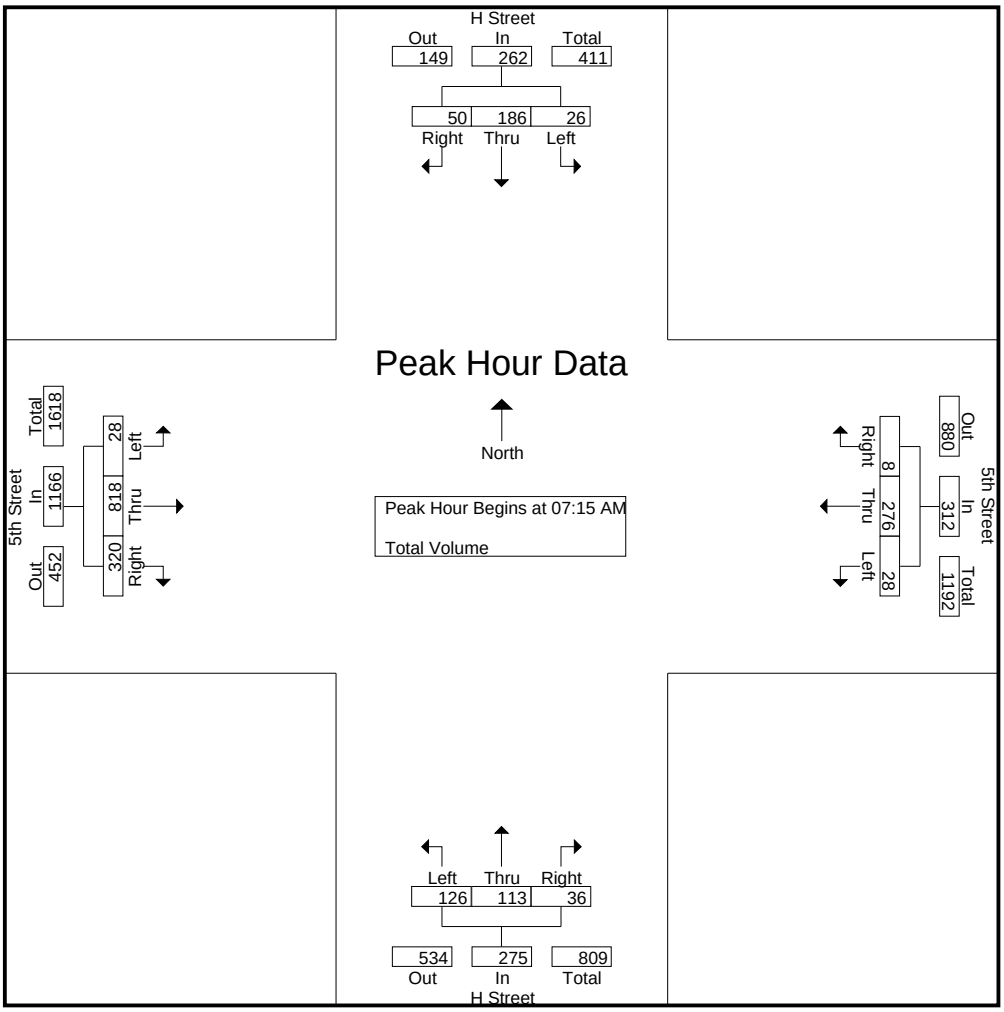

Peak Hour Analysis From 07:00 AM to 08:45 AM - Peak 1 of 1

Peak Hour for Each Approach Begins at:

	07:15 AM				07:30 AM				08:00 AM				07:15 AM			
+0 mins.	5	49	10	64	5	72	2	79	32	29	10	71	4	193	**94**	291
+15 mins.	8	**59**	13	**80**	**12**	**83**	2	**97**	**41**	27	10	78	**13**	**234**	75	**322**
+30 mins.	**9**	47	11	67	6	64	**4**	74	38	27	**11**	76	7	216	82	305
+45 mins.	4	31	**16**	51	8	83	0	91	41	**45**	4	**90**	4	175	69	248
Total Volume	26	186	50	262	31	302	8	341	152	128	35	315	28	818	320	1166
% App. Total	9.9	71	19.1		9.1	88.6	2.3		48.3	40.6	11.1		2.4	70.2	27.4	
PHF	.722	.788	.781	.819	.646	.910	.500	.879	.927	.711	.795	.875	.538	.874	.851	.905

Counts Unlimited Inc.
PO Box 1178
Corona, CA 92878
(951) 268-6268

City of San Bernardino
N/S: H Street
E/W: 5th Street
Weather: Sunny

File Name : SBCH5PM
Site Code : 00000009
Start Date : 12/13/2011
Page No : 1

Groups Printed- Total Volume

	H Street Southbound				5th Street Westbound				H Street Northbound				5th Street Eastbound				
Start Time	Left	Thru	Right	App. Total	Left	Thru	Right	App. Total	Left	Thru	Right	App. Total	Left	Thru	Right	App. Total	Int. Total
04:00 PM	7	32	20	59	15	191	5	211	110	69	17	196	14	155	50	219	685
04:15 PM	9	41	29	79	19	153	12	184	88	60	10	158	9	124	44	177	598
04:30 PM	6	45	40	91	15	226	14	255	92	52	16	160	16	125	50	191	697
04:45 PM	11	38	28	77	13	158	8	179	104	59	10	173	22	119	52	193	622
Total	33	156	117	306	62	728	39	829	394	240	53	687	61	523	196	780	2602
05:00 PM	11	65	35	111	22	282	9	313	104	102	14	220	8	116	66	190	834
05:15 PM	5	37	26	68	18	172	7	197	111	65	12	188	14	100	57	171	624
05:30 PM	6	41	22	69	14	186	6	206	110	63	11	184	13	109	41	163	622
05:45 PM	5	37	19	61	12	129	3	144	101	36	12	149	7	94	51	152	506
Total	27	180	102	309	66	769	25	860	426	266	49	741	42	419	215	676	2586
Grand Total	60	336	219	615	128	1497	64	1689	820	506	102	1428	103	942	411	1456	5188
Apprch %	9.8	54.6	35.6		7.6	88.6	3.8		57.4	35.4	7.1		7.1	64.7	28.2		
Total %	1.2	6.5	4.2	11.9	2.5	28.9	1.2	32.6	15.8	9.8	2	27.5	2	18.2	7.9	28.1	

	H Street Southbound				5th Street Westbound				H Street Northbound				5th Street Eastbound				
Start Time	Left	Thru	Right	App. Total	Left	Thru	Right	App. Total	Left	Thru	Right	App. Total	Left	Thru	Right	App. Total	Int. Total
Peak Hour Analysis From 04:00 PM to 05:45 PM - Peak 1 of 1																	
Peak Hour for Entire Intersection Begins at 04:30 PM																	
04:30 PM	6	45	**40**	91	15	226	**14**	255	92	52	**16**	160	16	**125**	50	191	697
04:45 PM	**11**	38	28	77	13	158	8	179	104	59	10	173	**22**	119	52	**193**	622
05:00 PM	11	**65**	35	**111**	**22**	**282**	9	**313**	104	**102**	14	**220**	8	116	**66**	190	**834**
05:15 PM	5	37	26	68	18	172	7	197	**111**	65	12	188	14	100	57	171	624
Total Volume	33	185	129	347	68	838	38	944	411	278	52	741	60	460	225	745	2777
% App. Total	9.5	53.3	37.2		7.2	88.8	4		55.5	37.5	7		8.1	61.7	30.2		
PHF	.750	.712	.806	.782	.773	.743	.679	.754	.926	.681	.813	.842	.682	.920	.852	.965	.832

Counts Unlimited Inc.
PO Box 1178
Corona, CA 92878
(951) 268-6268

City of San Bernardino
N/S: H Street
E/W: 5th Street
Weather: Sunny

File Name : SBCH5PM
Site Code : 00000009
Start Date : 12/13/2011
Page No : 2

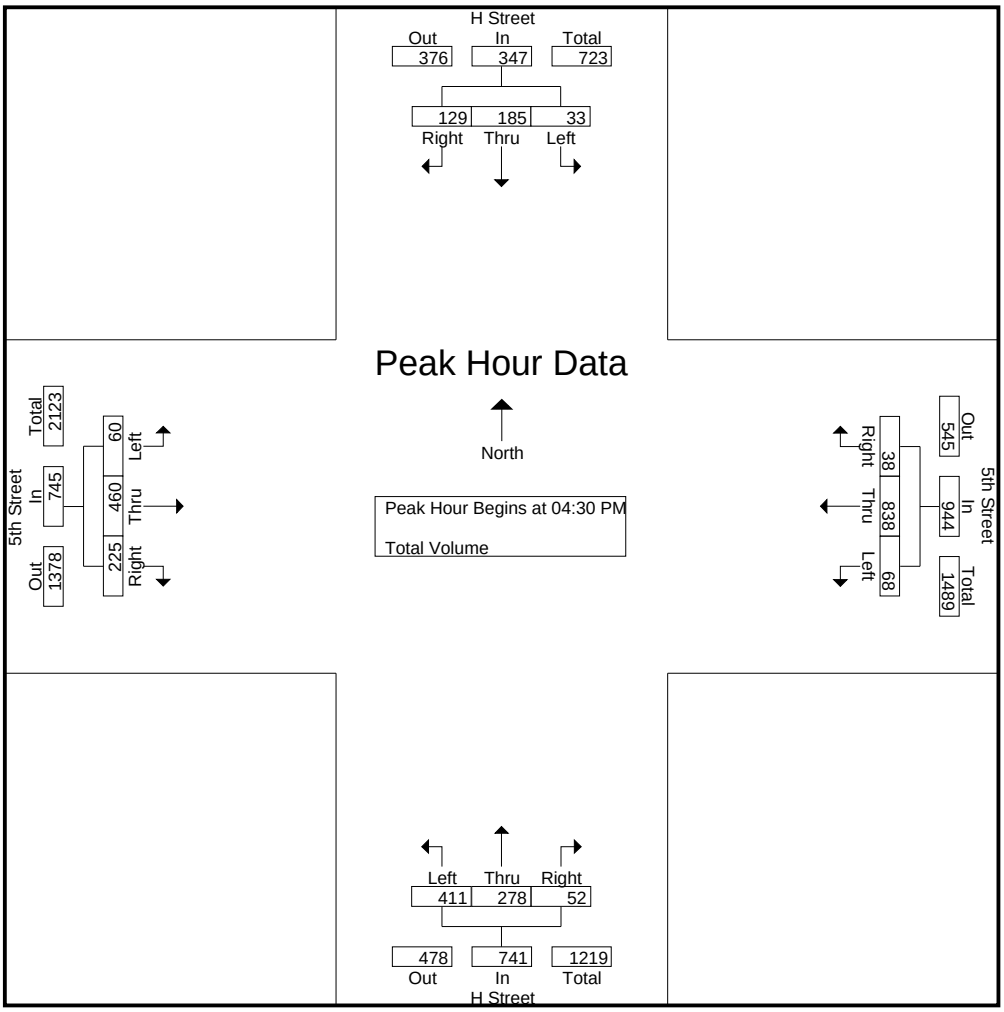

Peak Hour Analysis From 04:00 PM to 05:45 PM - Peak 1 of 1

Peak Hour for Each Approach Begins at:

	04:15 PM				04:30 PM				04:45 PM				04:00 PM			
+0 mins.	9	41	29	79	15	226	**14**	255	104	59	10	173	14	**155**	50	**219**
+15 mins.	6	45	**40**	91	13	158	8	179	104	**102**	**14**	**220**	9	124	44	177
+30 mins.	**11**	38	28	77	**22**	**282**	9	**313**	**111**	65	12	188	16	125	50	191
+45 mins.	11	**65**	35	**111**	18	172	7	197	110	63	11	184	**22**	119	**52**	193
Total Volume	37	189	132	358	68	838	38	944	429	289	47	765	61	523	196	780
% App. Total	10.3	52.8	36.9		7.2	88.8	4		56.1	37.8	6.1		7.8	67.1	25.1	
PHF	.841	.727	.825	.806	.773	.743	.679	.754	.966	.708	.839	.869	.693	.844	.942	.890

Counts Unlimited Inc.
PO Box 1178
Corona, CA 92878
(951) 268-6268

City of San Bernardino
N/S: F Street
E/W: Rialto Avenue
Weather: Sunny

File Name : SBCFRIAM
Site Code : 00000125
Start Date : 12/14/2011
Page No : 1

Groups Printed- Total Volume

	F Street Southbound			Rialto Avenue Westbound			Rialto Avenue Eastbound			
Start Time	Left	Right	App. Total	Thru	Right	App. Total	Left	Thru	App. Total	Int. Total
07:00 AM	2	7	9	45	3	48	3	53	56	113
07:15 AM	6	5	11	38	10	48	3	98	101	160
07:30 AM	3	5	8	37	2	39	4	80	84	131
07:45 AM	4	3	7	57	11	68	13	93	106	181
Total	15	20	35	177	26	203	23	324	347	585
08:00 AM	3	3	6	49	9	58	3	93	96	160
08:15 AM	6	10	16	60	9	69	7	77	84	169
08:30 AM	8	10	18	58	3	61	12	84	96	175
08:45 AM	1	9	10	55	4	59	6	79	85	154
Total	18	32	50	222	25	247	28	333	361	658
Grand Total	33	52	85	399	51	450	51	657	708	1243
Apprch %	38.8	61.2		88.7	11.3		7.2	92.8		
Total %	2.7	4.2	6.8	32.1	4.1	36.2	4.1	52.9	57	

	F Street Southbound			Rialto Avenue Westbound			Rialto Avenue Eastbound			
Start Time	Left	Right	App. Total	Thru	Right	App. Total	Left	Thru	App. Total	Int. Total
Peak Hour Analysis From 07:00 AM to 08:45 AM - Peak 1 of 1										
Peak Hour for Entire Intersection Begins at 07:45 AM										
07:45 AM	4	3	7	57	**11**	68	**13**	**93**	**106**	**181**
08:00 AM	3	3	6	49	9	58	3	93	96	160
08:15 AM	6	**10**	16	**60**	9	**69**	7	77	84	169
08:30 AM	**8**	10	**18**	58	3	61	12	84	96	175
Total Volume	21	26	47	224	32	256	35	347	382	685
% App. Total	44.7	55.3		87.5	12.5		9.2	90.8		
PHF	.656	.650	.653	.933	.727	.928	.673	.933	.901	.946

Counts Unlimited Inc.
PO Box 1178
Corona, CA 92878
(951) 268-6268

City of San Bernardino
N/S: F Street
E/W: Rialto Avenue
Weather: Sunny

File Name : SBCFRIAM
Site Code : 00000125
Start Date : 12/14/2011
Page No : 2

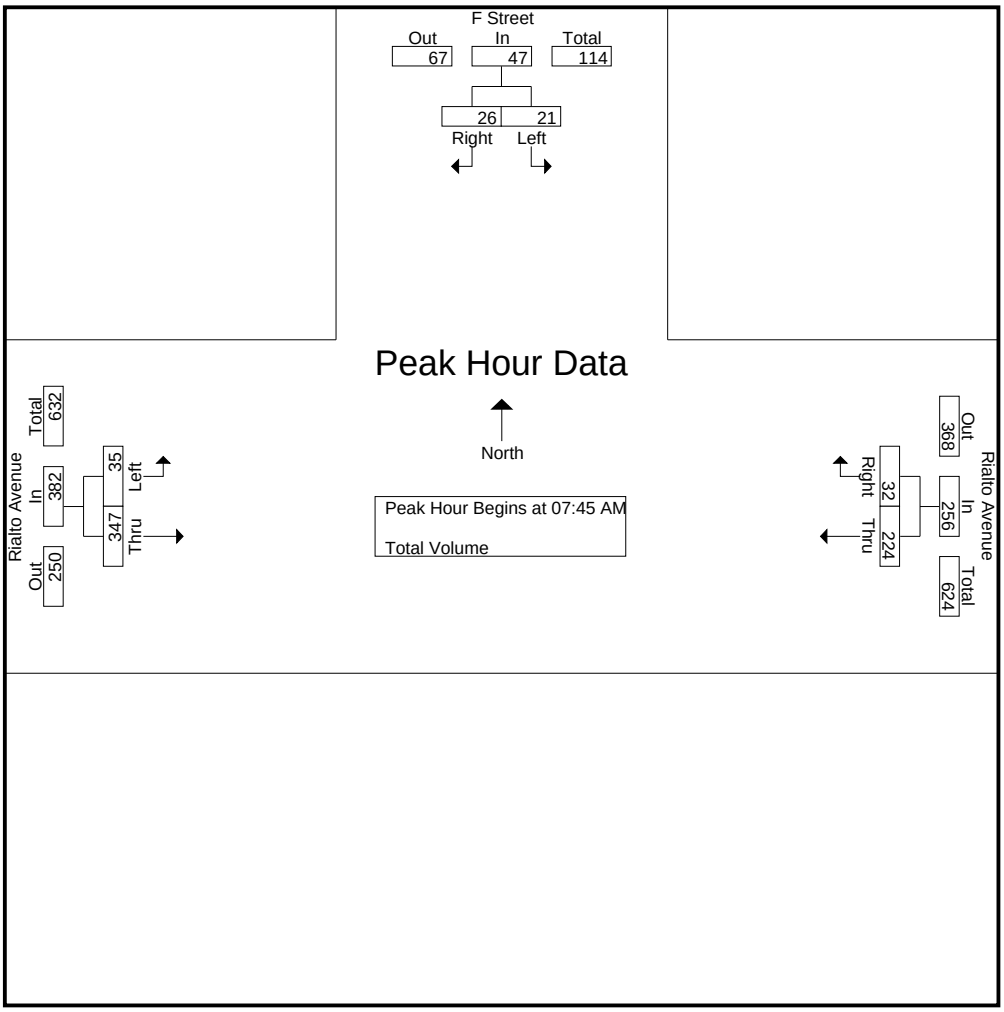

Peak Hour Analysis From 07:00 AM to 08:45 AM - Peak 1 of 1

Peak Hour for Each Approach Begins at:

	08:00 AM			07:45 AM			07:15 AM		
+0 mins.	3	3	6	57	**11**	68	3	**98**	101
+15 mins.	6	**10**	16	49	9	58	4	80	84
+30 mins.	**8**	10	**18**	**60**	9	**69**	**13**	93	**106**
+45 mins.	1	9	10	58	3	61	3	93	96
Total Volume	18	32	50	224	32	256	23	364	387
% App. Total	36	64		87.5	12.5		5.9	94.1	
PHF	.563	.800	.694	.933	.727	.928	.442	.929	.913

Counts Unlimited Inc.
PO Box 1178
Corona, CA 92878
(951) 268-6268

City of San Bernardino
N/S: F Street
E/W: Rialto Avenue
Weather: Sunny

File Name : SBCFRIPM
Site Code : 00000125
Start Date : 12/13/2011
Page No : 1

Groups Printed- Total Volume

	F Street Southbound			Rialto Avenue Westbound			Rialto Avenue Eastbound			
Start Time	Left	Right	App. Total	Thru	Right	App. Total	Left	Thru	App. Total	Int. Total
04:00 PM	8	11	19	142	11	153	8	93	101	273
04:15 PM	5	11	16	126	10	136	12	92	104	256
04:30 PM	12	19	31	111	4	115	11	92	103	249
04:45 PM	5	17	22	98	14	112	9	77	86	220
Total	30	58	88	477	39	516	40	354	394	998
05:00 PM	4	17	21	160	8	168	9	87	96	285
05:15 PM	2	21	23	154	8	162	9	83	92	277
05:30 PM	6	25	31	109	7	116	8	69	77	224
05:45 PM	3	17	20	72	2	74	6	61	67	161
Total	15	80	95	495	25	520	32	300	332	947
Grand Total	45	138	183	972	64	1036	72	654	726	1945
Apprch %	24.6	75.4		93.8	6.2		9.9	90.1		
Total %	2.3	7.1	9.4	50	3.3	53.3	3.7	33.6	37.3	

	F Street Southbound			Rialto Avenue Westbound			Rialto Avenue Eastbound			
Start Time	Left	Right	App. Total	Thru	Right	App. Total	Left	Thru	App. Total	Int. Total
Peak Hour Analysis From 04:00 PM to 05:45 PM - Peak 1 of 1										
Peak Hour for Entire Intersection Begins at 04:30 PM										
04:30 PM	**12**	19	**31**	111	4	115	**11**	**92**	**103**	249
04:45 PM	5	17	22	98	**14**	112	9	77	86	220
05:00 PM	4	17	21	**160**	8	**168**	9	87	96	**285**
05:15 PM	2	**21**	23	154	8	162	9	83	92	277
Total Volume	23	74	97	523	34	557	38	339	377	1031
% App. Total	23.7	76.3		93.9	6.1		10.1	89.9		
PHF	.479	.881	.782	.817	.607	.829	.864	.921	.915	.904

Counts Unlimited Inc.
PO Box 1178
Corona, CA 92878
(951) 268-6268

City of San Bernardino
N/S: F Street
E/W: Rialto Avenue
Weather: Sunny

File Name : SBCFRIPM
Site Code : 00000125
Start Date : 12/13/2011
Page No : 2

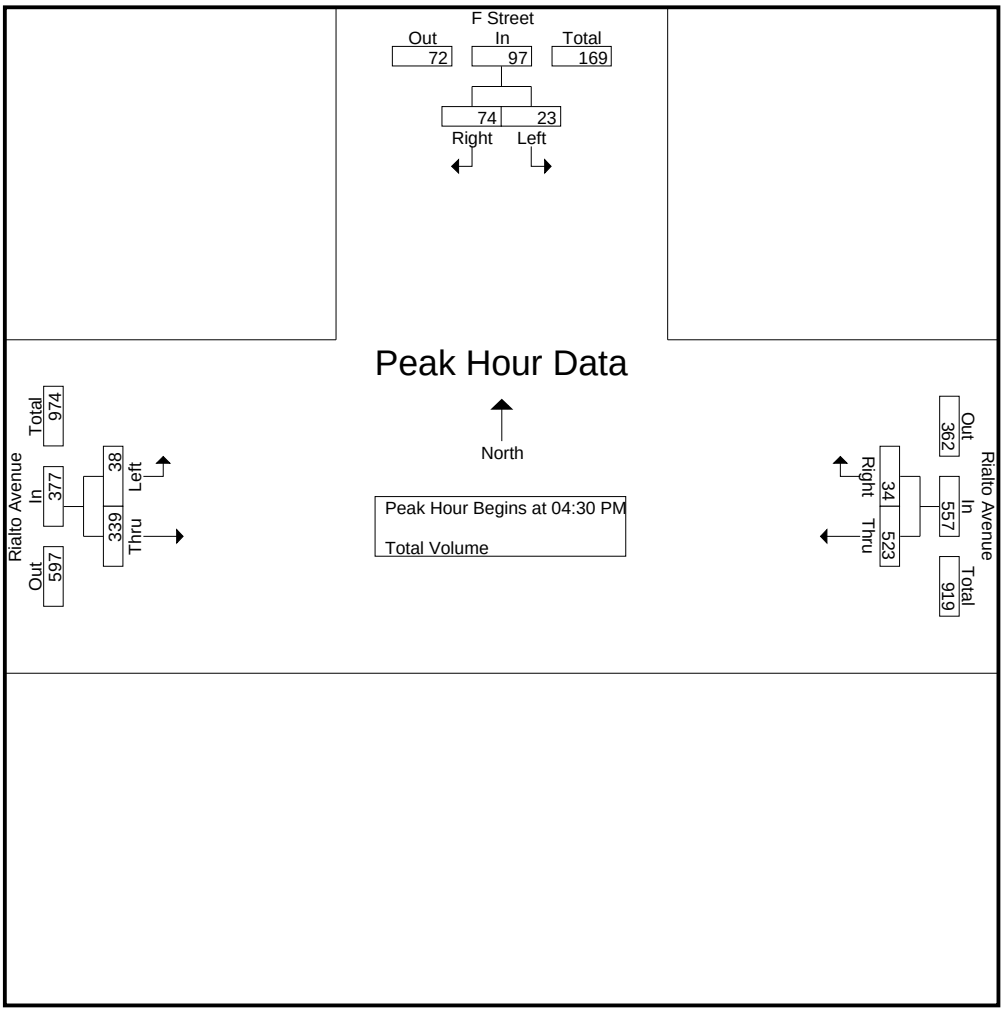

Peak Hour Analysis From 04:00 PM to 05:45 PM - Peak 1 of 1

Peak Hour for Each Approach Begins at:

	04:30 PM			04:45 PM			04:00 PM		
+0 mins.	**12**	19	**31**	98	**14**	112	8	**93**	101
+15 mins.	5	17	22	**160**	8	**168**	**12**	92	**104**
+30 mins.	4	17	21	154	8	162	11	92	103
+45 mins.	2	**21**	23	109	7	116	9	77	86
Total Volume	23	74	97	521	37	558	40	354	394
% App. Total	23.7	76.3		93.4	6.6		10.2	89.8	
PHF	.479	.881	.782	.814	.661	.830	.833	.952	.947

Counts Unlimited Inc.
PO Box 1178
Corona, CA 92878
(951) 268-6268

City of San Bernardino
N/S: E Street
E/W: 5th Street
Weather: Sunny

File Name : SBCE5AM
Site Code : 00000043
Start Date : 12/7/2011
Page No : 1

Groups Printed- Passenger Vehicles - Large 2 Axle Vehicles - 3 Axle Vehicles - 4+ Axle Trucks

	E Street Southbound				5th Street Westbound				E Street Northbound				5th Street Eastbound				
Start Time	Left	Thru	Right	App. Total	Left	Thru	Right	App. Total	Left	Thru	Right	App. Total	Left	Thru	Right	App. Total	Int. Total
07:00 AM	3	30	4	37	10	45	5	60	2	31	11	44	6	132	9	147	288
07:15 AM	9	46	3	58	8	59	2	69	4	32	7	43	6	152	18	176	346
07:30 AM	15	69	8	92	12	83	6	101	14	38	10	62	7	162	18	187	442
07:45 AM	20	77	6	103	15	70	5	90	11	39	18	68	11	184	21	216	477
Total	47	222	21	290	45	257	18	320	31	140	46	217	30	630	66	726	1553
08:00 AM	6	41	6	53	9	67	5	81	9	37	15	61	8	156	14	178	373
08:15 AM	7	53	3	63	6	69	6	81	5	31	15	51	8	113	17	138	333
08:30 AM	12	51	7	70	13	79	2	94	5	32	25	62	7	130	19	156	382
08:45 AM	10	67	7	84	8	62	6	76	8	43	13	64	11	145	16	172	396
Total	35	212	23	270	36	277	19	332	27	143	68	238	34	544	66	644	1484
Grand Total	82	434	44	560	81	534	37	652	58	283	114	455	64	1174	132	1370	3037
Apprch %	14.6	77.5	7.9		12.4	81.9	5.7		12.7	62.2	25.1		4.7	85.7	9.6		
Total %	2.7	14.3	1.4	18.4	2.7	17.6	1.2	21.5	1.9	9.3	3.8	15	2.1	38.7	4.3	45.1	
Passenger Vehicles	82	416	44	542	79	479	37	595	57	271	113	441	60	1114	128	1302	2880
% Passenger Vehicles	100	95.9	100	96.8	97.5	89.7	100	91.3	98.3	95.8	99.1	96.9	93.8	94.9	97	95	94.8
Large 2 Axle Vehicles	0	18	0	18	2	46	0	48	1	12	1	14	4	56	2	62	142
% Large 2 Axle Vehicles	0	4.1	0	3.2	2.5	8.6	0	7.4	1.7	4.2	0.9	3.1	6.2	4.8	1.5	4.5	4.7
3 Axle Vehicles	0	0	0	0	0	5	0	5	0	0	0	0	0	1	0	1	6
% 3 Axle Vehicles	0	0	0	0	0	0.9	0	0.8	0	0	0	0	0	0.1	0	0.1	0.2
4+ Axle Trucks	0	0	0	0	0	4	0	4	0	0	0	0	0	3	2	5	9
% 4+ Axle Trucks	0	0	0	0	0	0.7	0	0.6	0	0	0	0	0	0.3	1.5	0.4	0.3

	E Street Southbound				5th Street Westbound				E Street Northbound				5th Street Eastbound				
Start Time	Left	Thru	Right	App. Total	Left	Thru	Right	App. Total	Left	Thru	Right	App. Total	Left	Thru	Right	App. Total	Int. Total
Peak Hour Analysis From 07:00 AM to 08:45 AM - Peak 1 of 1																	
Peak Hour for Entire Intersection Begins at 07:15 AM																	
07:15 AM	9	46	3	58	8	59	2	69	4	32	7	43	6	152	18	176	346
07:30 AM	15	69	**8**	92	12	**83**	**6**	**101**	**14**	38	10	62	7	162	18	187	442
07:45 AM	**20**	**77**	6	**103**	**15**	70	5	90	11	**39**	**18**	**68**	**11**	**184**	**21**	**216**	**477**
08:00 AM	6	41	6	53	9	67	5	81	9	37	15	61	8	156	14	178	373
Total Volume	50	233	23	306	44	279	18	341	38	146	50	234	32	654	71	757	1638
% App. Total	16.3	76.1	7.5		12.9	81.8	5.3		16.2	62.4	21.4		4.2	86.4	9.4		
PHF	.625	.756	.719	.743	.733	.840	.750	.844	.679	.936	.694	.860	.727	.889	.845	.876	.858

Counts Unlimited Inc.
PO Box 1178
Corona, CA 92878
(951) 268-6268

City of San Bernardino
N/S: E Street
E/W: 5th Street
Weather: Sunny

File Name : SBCE5AM
Site Code : 00000043
Start Date : 12/7/2011
Page No : 2

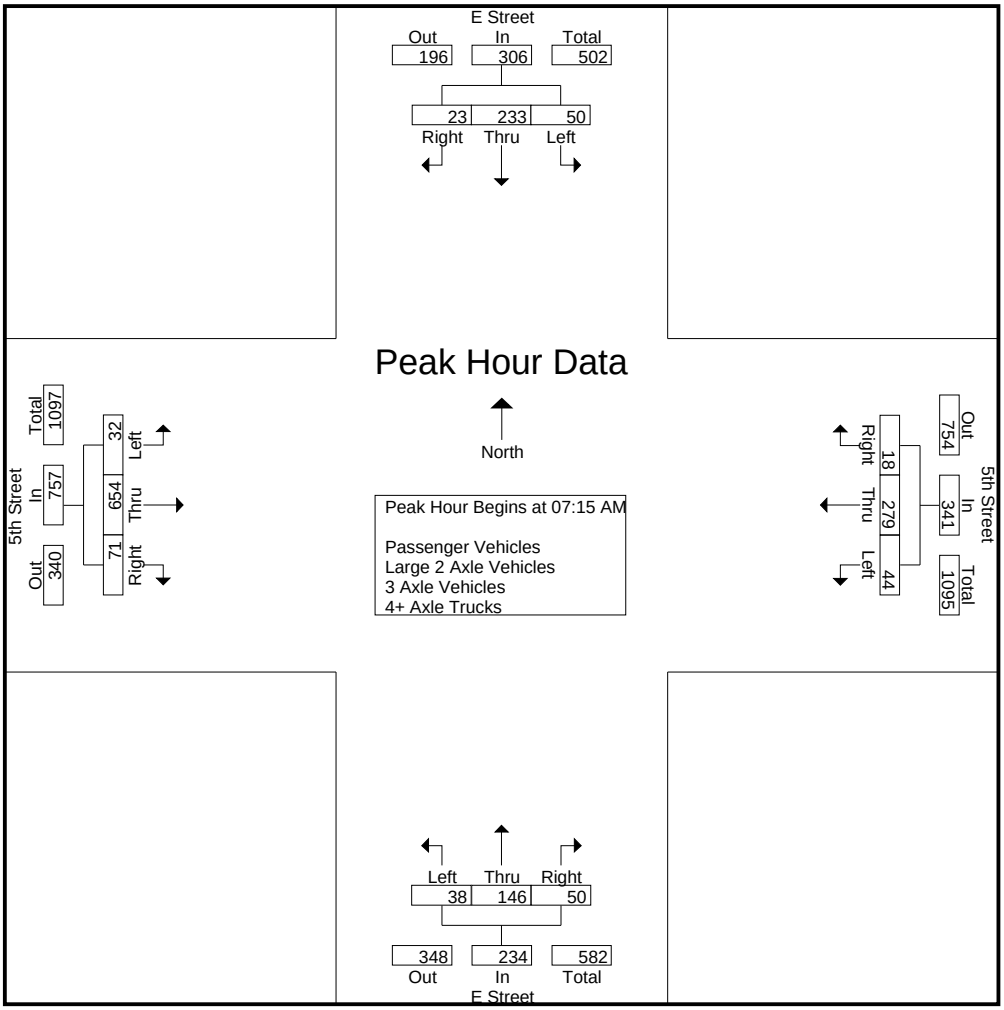

Peak Hour Analysis From 07:00 AM to 08:45 AM - Peak 1 of 1

Peak Hour for Each Approach Begins at:

	07:30 AM				**07:30 AM**				**07:30 AM**				**07:15 AM**			
+0 mins.	**15**	**69**	8	92	12	83	6	101	**14**	38	10	62	6	152	18	176
+15 mins.	**20**	**77**	6	**103**	**15**	70	5	90	11	**39**	**18**	**68**	7	162	18	187
+30 mins.	6	41	6	53	9	67	5	81	9	37	15	61	**11**	**184**	**21**	**216**
+45 mins.	7	53	3	63	6	69	6	81	5	31	15	51	8	156	14	178
Total Volume	48	240	23	311	42	289	22	353	39	145	58	242	32	654	71	757
% App. Total	15.4	77.2	7.4		11.9	81.9	6.2		16.1	59.9	24		4.2	86.4	9.4	
PHF	.600	.779	.719	.755	.700	.870	.917	.874	.696	.929	.806	.890	.727	.889	.845	.876

Counts Unlimited Inc.
PO Box 1178
Corona, CA 92878
(951) 268-6268

City of San Bernardino
N/S: E Street
E/W: 5th Street
Weather: Sunny

File Name : SBCE5AM
Site Code : 00000043
Start Date : 12/7/2011
Page No : 1

Groups Printed- Passenger Vehicles

	E Street Southbound				5th Street Westbound				E Street Northbound				5th Street Eastbound				
Start Time	Left	Thru	Right	App. Total	Left	Thru	Right	App. Total	Left	Thru	Right	App. Total	Left	Thru	Right	App. Total	Int. Total
07:00 AM	3	28	4	35	10	40	5	55	2	27	11	40	6	125	9	140	270
07:15 AM	9	43	3	55	8	53	2	63	4	29	7	40	6	149	18	173	331
07:30 AM	15	66	8	89	12	79	6	97	14	38	10	62	5	153	17	175	423
07:45 AM	20	76	6	102	14	62	5	81	11	39	18	68	11	174	20	205	456
Total	47	213	21	281	44	234	18	296	31	133	46	210	28	601	64	693	1480
08:00 AM	6	40	6	52	9	57	5	71	9	37	15	61	7	147	14	168	352
08:15 AM	7	52	3	62	6	63	6	75	4	28	15	47	7	108	17	132	316
08:30 AM	12	48	7	67	13	72	2	87	5	32	24	61	7	119	18	144	359
08:45 AM	10	63	7	80	7	53	6	66	8	41	13	62	11	139	15	165	373
Total	35	203	23	261	35	245	19	299	26	138	67	231	32	513	64	609	1400
Grand Total	82	416	44	542	79	479	37	595	57	271	113	441	60	1114	128	1302	2880
Apprch %	15.1	76.8	8.1		13.3	80.5	6.2		12.9	61.5	25.6		4.6	85.6	9.8		
Total %	2.8	14.4	1.5	18.8	2.7	16.6	1.3	20.7	2	9.4	3.9	15.3	2.1	38.7	4.4	45.2	

	E Street Southbound				5th Street Westbound				E Street Northbound				5th Street Eastbound				
Start Time	Left	Thru	Right	App. Total	Left	Thru	Right	App. Total	Left	Thru	Right	App. Total	Left	Thru	Right	App. Total	Int. Total
Peak Hour Analysis From 07:15 AM to 08:00 AM - Peak 1 of 1																	
Peak Hour for Entire Intersection Begins at 07:15 AM																	
07:15 AM	9	43	3	55	8	53	2	63	4	29	7	40	6	149	18	173	331
07:30 AM	15	66	**8**	89	12	**79**	**6**	**97**	**14**	38	10	62	5	153	17	175	423
07:45 AM	**20**	**76**	6	**102**	**14**	62	5	81	11	**39**	**18**	**68**	**11**	**174**	**20**	**205**	**456**
08:00 AM	6	40	6	52	9	57	5	71	9	37	15	61	7	147	14	168	352
Total Volume	50	225	23	298	43	251	18	312	38	143	50	231	29	623	69	721	1562
% App. Total	16.8	75.5	7.7		13.8	80.4	5.8		16.5	61.9	21.6		4	86.4	9.6		
PHF	.625	.740	.719	.730	.768	.794	.750	.804	.679	.917	.694	.849	.659	.895	.863	.879	.856

Counts Unlimited Inc.
PO Box 1178
Corona, CA 92878
(951) 268-6268

City of San Bernardino
N/S: E Street
E/W: 5th Street
Weather: Sunny

File Name : SBCE5AM
Site Code : 00000043
Start Date : 12/7/2011
Page No : 2

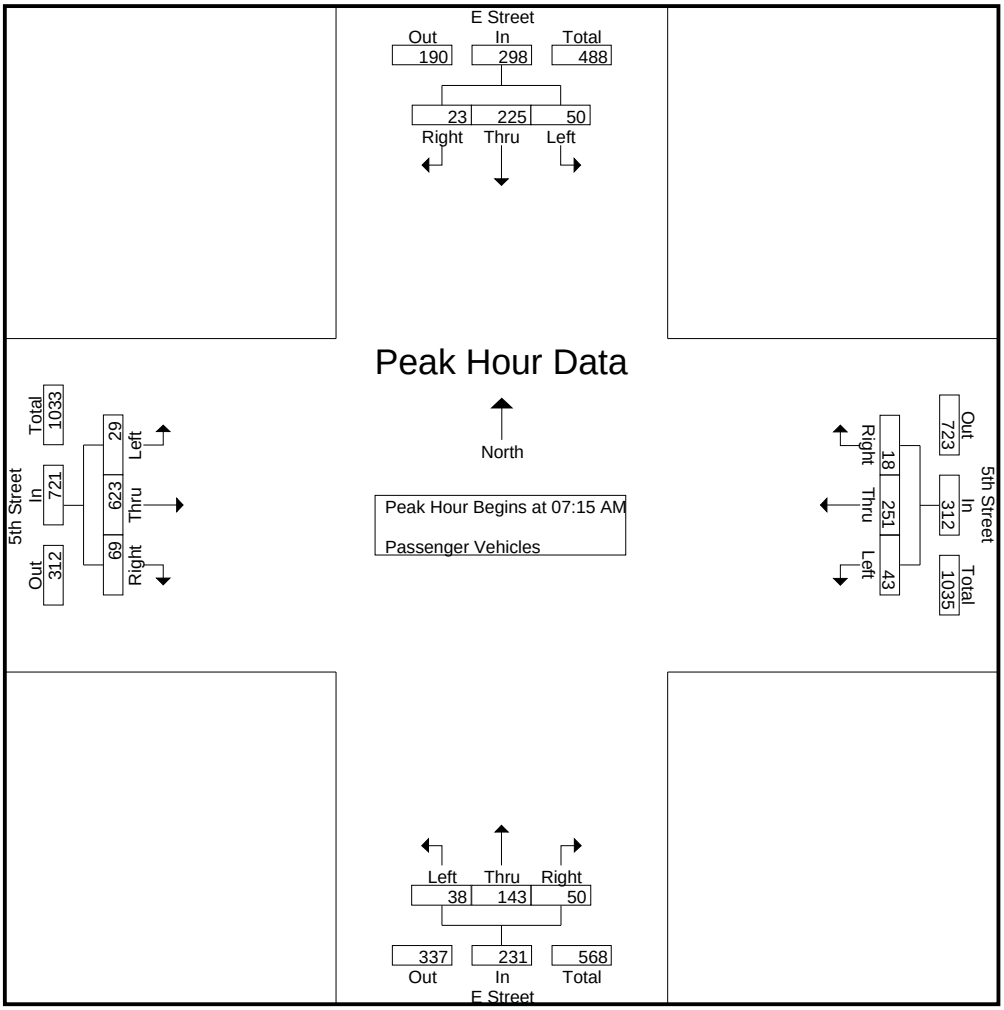

Peak Hour Analysis From 07:15 AM to 08:00 AM - Peak 1 of 1

Peak Hour for Each Approach Begins at:

	07:15 AM				07:15 AM				07:15 AM				07:15 AM			
+0 mins.	9	43	3	55	8	53	2	63	4	29	7	40	6	149	18	173
+15 mins.	15	66	**8**	89	12	**79**	**6**	**97**	**14**	38	10	62	5	153	17	175
+30 mins.	**20**	**76**	6	**102**	**14**	62	5	81	11	**39**	**18**	**68**	**11**	**174**	**20**	**205**
+45 mins.	6	40	6	52	9	57	5	71	9	37	15	61	7	147	14	168
Total Volume	50	225	23	298	43	251	18	312	38	143	50	231	29	623	69	721
% App. Total	16.8	75.5	7.7		13.8	80.4	5.8		16.5	61.9	21.6		4	86.4	9.6	
PHF	.625	.740	.719	.730	.768	.794	.750	.804	.679	.917	.694	.849	.659	.895	.863	.879

Counts Unlimited Inc.
PO Box 1178
Corona, CA 92878
(951) 268-6268

City of San Bernardino
N/S: E Street
E/W: 5th Street
Weather: Sunny

File Name : SBCE5AM
Site Code : 00000043
Start Date : 12/7/2011
Page No : 1

Groups Printed- Large 2 Axle Vehicles

	E Street Southbound				5th Street Westbound				E Street Northbound				5th Street Eastbound				
Start Time	Left	Thru	Right	App. Total	Left	Thru	Right	App. Total	Left	Thru	Right	App. Total	Left	Thru	Right	App. Total	Int. Total
07:00 AM	0	2	0	2	0	5	0	5	0	4	0	4	0	7	0	7	18
07:15 AM	0	3	0	3	0	2	0	2	0	3	0	3	0	3	0	3	11
07:30 AM	0	3	0	3	0	4	0	4	0	0	0	0	2	9	0	11	18
07:45 AM	0	1	0	1	1	7	0	8	0	0	0	0	0	8	0	8	17
Total	0	9	0	9	1	18	0	19	0	7	0	7	2	27	0	29	64
08:00 AM	0	1	0	1	0	7	0	7	0	0	0	0	1	8	0	9	17
08:15 AM	0	1	0	1	0	6	0	6	1	3	0	4	1	5	0	6	17
08:30 AM	0	3	0	3	0	7	0	7	0	0	1	1	0	11	1	12	23
08:45 AM	0	4	0	4	1	8	0	9	0	2	0	2	0	5	1	6	21
Total	0	9	0	9	1	28	0	29	1	5	1	7	2	29	2	33	78
Grand Total	0	18	0	18	2	46	0	48	1	12	1	14	4	56	2	62	142
Apprch %	0	100	0		4.2	95.8	0		7.1	85.7	7.1		6.5	90.3	3.2		
Total %	0	12.7	0	12.7	1.4	32.4	0	33.8	0.7	8.5	0.7	9.9	2.8	39.4	1.4	43.7	

	E Street Southbound				5th Street Westbound				E Street Northbound				5th Street Eastbound				
Start Time	Left	Thru	Right	App. Total	Left	Thru	Right	App. Total	Left	Thru	Right	App. Total	Left	Thru	Right	App. Total	Int. Total
Peak Hour Analysis From 07:15 AM to 08:00 AM - Peak 1 of 1																	
Peak Hour for Entire Intersection Begins at 07:15 AM																	
07:15 AM	0	**3**	0	**3**	0	2	0	2	0	**3**	0	**3**	0	3	0	3	11
07:30 AM	0	3	0	3	0	4	0	4	0	0	0	0	**2**	**9**	0	**11**	**18**
07:45 AM	0	1	0	1	**1**	**7**	0	**8**	0	0	0	0	0	8	0	8	17
08:00 AM	0	1	0	1	0	7	0	7	0	0	0	0	1	8	0	9	17
Total Volume	0	8	0	8	1	20	0	21	0	3	0	3	3	28	0	31	63
% App. Total	0	100	0		4.8	95.2	0		0	100	0		9.7	90.3	0		
PHF	.000	.667	.000	.667	.250	.714	.000	.656	.000	.250	.000	.250	.375	.778	.000	.705	.875

Counts Unlimited Inc.
PO Box 1178
Corona, CA 92878
(951) 268-6268

City of San Bernardino
N/S: E Street
E/W: 5th Street
Weather: Sunny

File Name : SBCE5AM
Site Code : 00000043
Start Date : 12/7/2011
Page No : 2

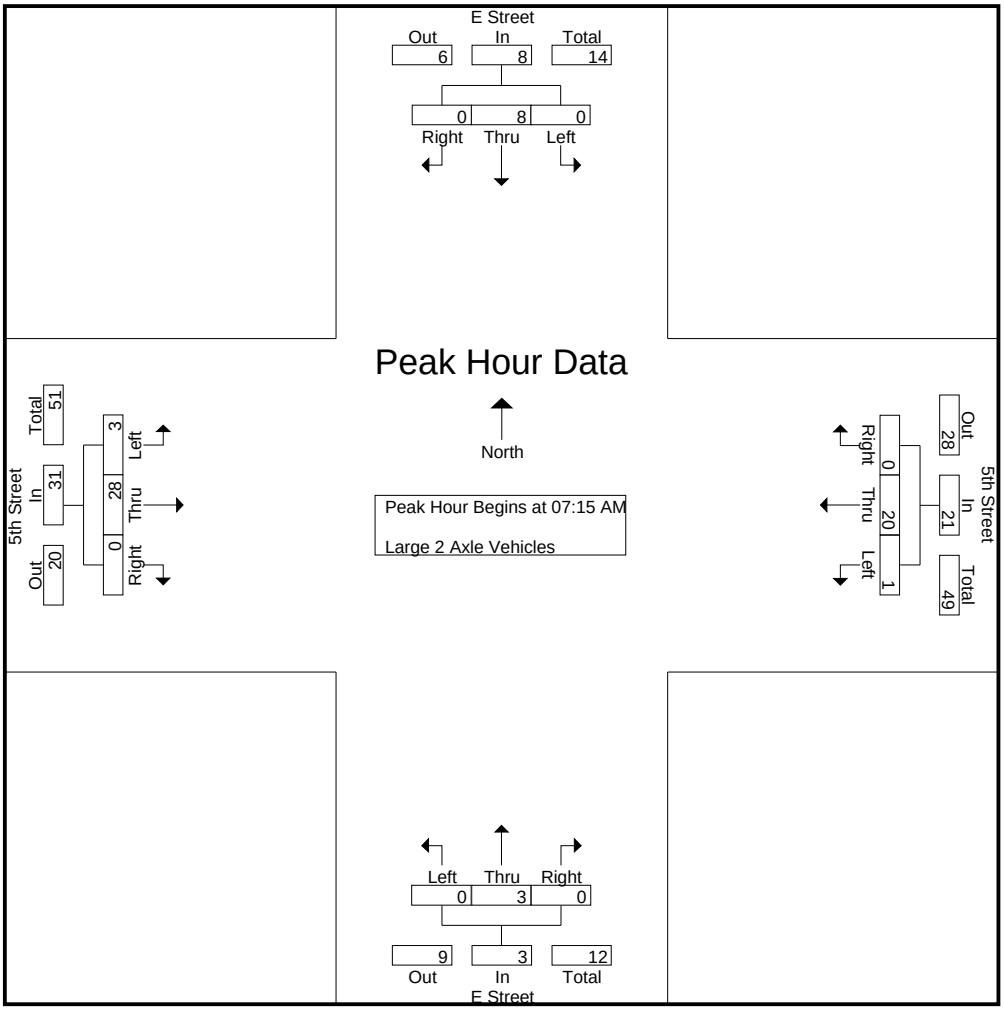

Peak Hour Analysis From 07:15 AM to 08:00 AM - Peak 1 of 1

Peak Hour for Each Approach Begins at:

	07:15 AM				**07:15 AM**				**07:15 AM**				**07:15 AM**			
+0 mins.	**0**	3	0	3	0	2	0	2	0	3	0	3	0	3	0	3
+15 mins.	0	3	0	3	0	4	0	4	0	0	0	0	**2**	**9**	0	**11**
+30 mins.	0	1	0	1	**1**	**7**	0	**8**	0	0	0	0	0	8	0	8
+45 mins.	0	1	0	1	0	7	0	7	0	0	0	0	1	8	0	9
Total Volume	0	8	0	8	1	20	0	21	0	3	0	3	3	28	0	31
% App. Total	0	100	0		4.8	95.2	0		0	100	0		9.7	90.3	0	
PHF	.000	.667	.000	.667	.250	.714	.000	.656	.000	.250	.000	.250	.375	.778	.000	.705

Counts Unlimited Inc.
PO Box 1178
Corona, CA 92878
(951) 268-6268

City of San Bernardino
N/S: E Street
E/W: 5th Street
Weather: Sunny

File Name : SBCE5AM
Site Code : 00000043
Start Date : 12/7/2011
Page No : 1

Groups Printed- 3 Axle Vehicles

	E Street Southbound				5th Street Westbound				E Street Northbound				5th Street Eastbound				
Start Time	Left	Thru	Right	App. Total	Left	Thru	Right	App. Total	Left	Thru	Right	App. Total	Left	Thru	Right	App. Total	Int. Total
07:00 AM	0	0	0	0	0	0	0	0	0	0	0	0	0	0	0	0	0
07:15 AM	0	0	0	0	0	2	0	2	0	0	0	0	0	0	0	0	2
07:30 AM	0	0	0	0	0	0	0	0	0	0	0	0	0	0	0	0	0
07:45 AM	0	0	0	0	0	1	0	1	0	0	0	0	0	0	0	0	1
Total	0	0	0	0	0	3	0	3	0	0	0	0	0	0	0	0	3
08:00 AM	0	0	0	0	0	2	0	2	0	0	0	0	0	1	0	1	3
08:15 AM	0	0	0	0	0	0	0	0	0	0	0	0	0	0	0	0	0
08:30 AM	0	0	0	0	0	0	0	0	0	0	0	0	0	0	0	0	0
08:45 AM	0	0	0	0	0	0	0	0	0	0	0	0	0	0	0	0	0
Total	0	0	0	0	0	2	0	2	0	0	0	0	0	1	0	1	3
Grand Total	0	0	0	0	0	5	0	5	0	0	0	0	0	1	0	1	6
Apprch %	0	0	0		0	100	0		0	0	0		0	100	0		
Total %	0	0	0	0	0	83.3	0	83.3	0	0	0	0	0	16.7	0	16.7	

	E Street Southbound				5th Street Westbound				E Street Northbound				5th Street Eastbound				
Start Time	Left	Thru	Right	App. Total	Left	Thru	Right	App. Total	Left	Thru	Right	App. Total	Left	Thru	Right	App. Total	Int. Total
Peak Hour Analysis From 07:15 AM to 08:00 AM - Peak 1 of 1																	
Peak Hour for Entire Intersection Begins at 07:15 AM																	
07:15 AM	0	0	0	0	0	**2**	0	**2**	0	0	0	0	0	0	0	0	2
07:30 AM	0	0	0	0	0	0	0	0	0	0	0	0	0	0	0	0	0
07:45 AM	0	0	0	0	0	1	0	1	0	0	0	0	0	0	0	0	1
08:00 AM	0	0	0	0	0	2	0	2	0	0	0	0	0	**1**	0	**1**	**3**
Total Volume	0	0	0	0	0	5	0	5	0	0	0	0	0	1	0	1	6
% App. Total	0	0	0		0	100	0		0	0	0		0	100	0		
PHF	.000	.000	.000	.000	.000	.625	.000	.625	.000	.000	.000	.000	.000	.250	.000	.250	.500

Counts Unlimited Inc.
PO Box 1178
Corona, CA 92878
(951) 268-6268

City of San Bernardino
N/S: E Street
E/W: 5th Street
Weather: Sunny

File Name : SBCE5AM
Site Code : 00000043
Start Date : 12/7/2011
Page No : 2

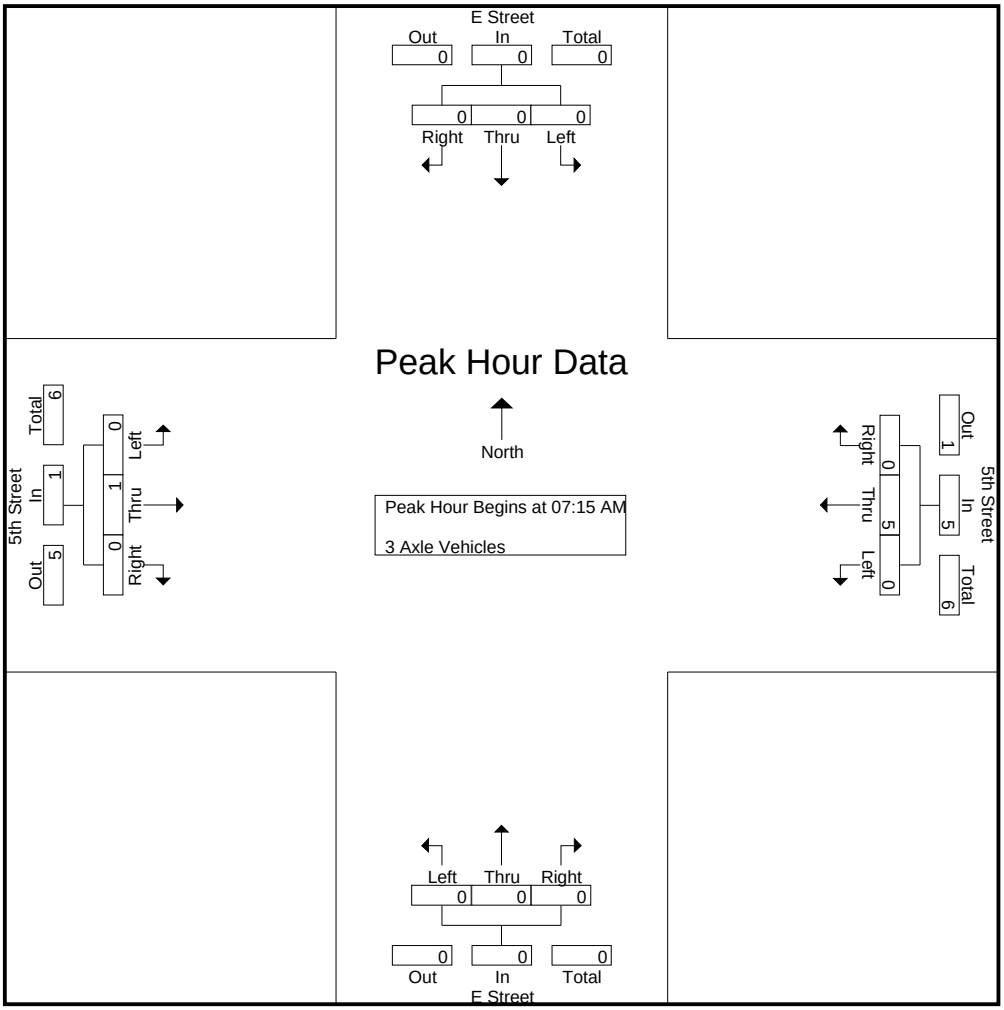

Peak Hour Analysis From 07:15 AM to 08:00 AM - Peak 1 of 1

Peak Hour for Each Approach Begins at:

	07:15 AM				07:15 AM				07:15 AM				07:15 AM			
+0 mins.	0	0	0	0	0	**2**	0	**2**	0	0	0	0	0	0	0	0
+15 mins.	0	0	0	0	0	0	0	0	0	0	0	0	0	0	0	0
+30 mins.	0	0	0	0	0	1	0	1	0	0	0	0	0	0	0	0
+45 mins.	0	0	0	0	0	2	0	2	0	0	0	0	0	**1**	0	**1**
Total Volume	0	0	0	0	0	5	0	5	0	0	0	0	0	1	0	1
% App. Total	0	0	0		0	100	0		0	0	0		0	100	0	
PHF	.000	.000	.000	.000	.000	.625	.000	.625	.000	.000	.000	.000	.000	.250	.000	.250

Counts Unlimited Inc.
PO Box 1178
Corona, CA 92878
(951) 268-6268

City of San Bernardino
N/S: E Street
E/W: 5th Street
Weather: Sunny

File Name : SBCE5AM
Site Code : 00000043
Start Date : 12/7/2011
Page No : 1

Groups Printed- 4+ Axle Trucks

	E Street Southbound				5th Street Westbound				E Street Northbound				5th Street Eastbound				
Start Time	Left	Thru	Right	App. Total	Left	Thru	Right	App. Total	Left	Thru	Right	App. Total	Left	Thru	Right	App. Total	Int. Total
07:00 AM	0	0	0	0	0	0	0	0	0	0	0	0	0	0	0	0	0
07:15 AM	0	0	0	0	0	2	0	2	0	0	0	0	0	0	0	0	2
07:30 AM	0	0	0	0	0	0	0	0	0	0	0	0	0	0	1	1	1
07:45 AM	0	0	0	0	0	0	0	0	0	0	0	0	0	2	1	3	3
Total	0	0	0	0	0	2	0	2	0	0	0	0	0	2	2	4	6
08:00 AM	0	0	0	0	0	1	0	1	0	0	0	0	0	0	0	0	1
08:15 AM	0	0	0	0	0	0	0	0	0	0	0	0	0	0	0	0	0
08:30 AM	0	0	0	0	0	0	0	0	0	0	0	0	0	0	0	0	0
08:45 AM	0	0	0	0	0	1	0	1	0	0	0	0	0	1	0	1	2
Total	0	0	0	0	0	2	0	2	0	0	0	0	0	1	0	1	3
Grand Total	0	0	0	0	0	4	0	4	0	0	0	0	0	3	2	5	9
Apprch %	0	0	0		0	100	0		0	0	0		0	60	40		
Total %	0	0	0	0	0	44.4	0	44.4	0	0	0	0	0	33.3	22.2	55.6	

	E Street Southbound				5th Street Westbound				E Street Northbound				5th Street Eastbound				
Start Time	Left	Thru	Right	App. Total	Left	Thru	Right	App. Total	Left	Thru	Right	App. Total	Left	Thru	Right	App. Total	Int. Total
Peak Hour Analysis From 07:15 AM to 08:00 AM - Peak 1 of 1																	
Peak Hour for Entire Intersection Begins at 07:15 AM																	
07:15 AM	0	0	0	0	0	**2**	0	**2**	0	0	0	0	0	0	0	0	2
07:30 AM	0	0	0	0	0	0	0	0	0	0	0	0	0	0	**1**	1	1
07:45 AM	0	0	0	0	0	0	0	0	0	0	0	0	0	**2**	1	**3**	**3**
08:00 AM	0	0	0	0	0	1	0	1	0	0	0	0	0	0	0	0	1
Total Volume	0	0	0	0	0	3	0	3	0	0	0	0	0	2	2	4	7
% App. Total	0	0	0		0	100	0		0	0	0		0	50	50		
PHF	.000	.000	.000	.000	.000	.375	.000	.375	.000	.000	.000	.000	.000	.250	.500	.333	.583

Counts Unlimited Inc.
PO Box 1178
Corona, CA 92878
(951) 268-6268

City of San Bernardino
N/S: E Street
E/W: 5th Street
Weather: Sunny

File Name : SBCE5AM
Site Code : 00000043
Start Date : 12/7/2011
Page No : 2

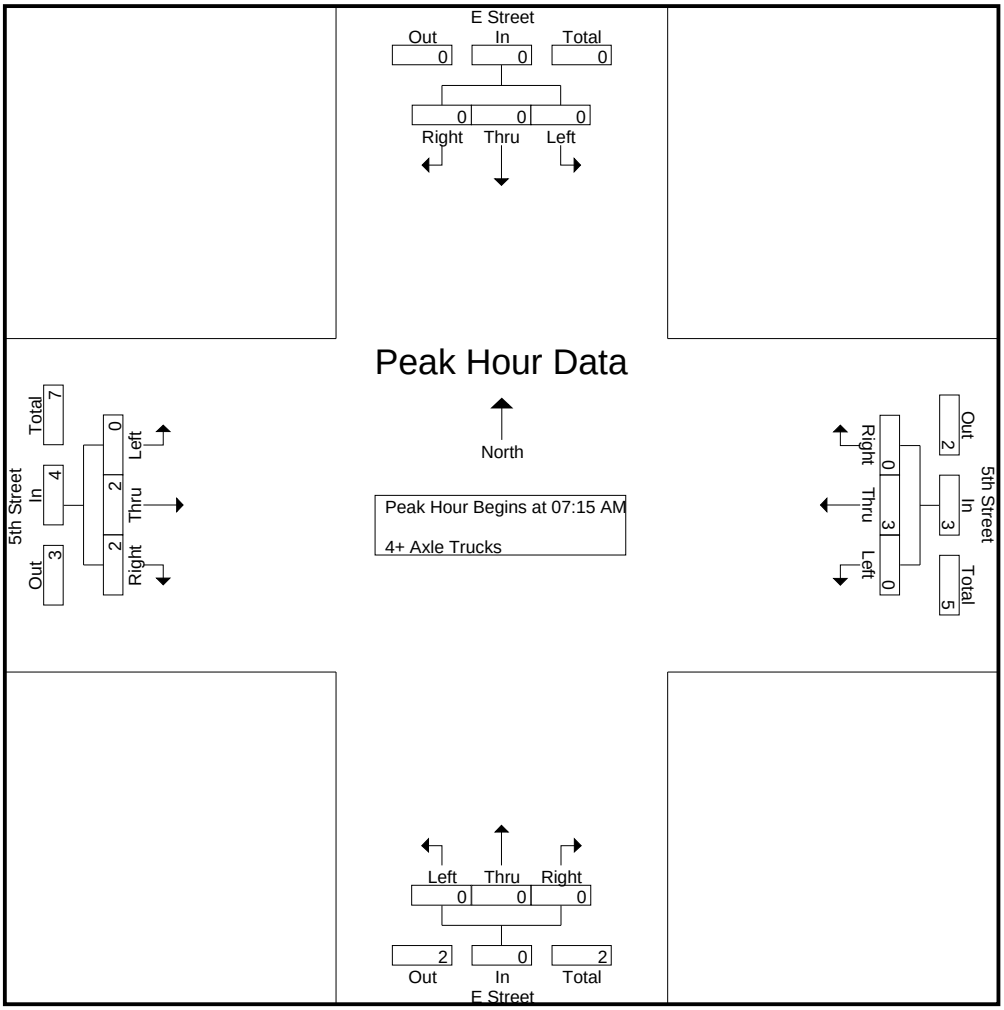

Peak Hour Analysis From 07:15 AM to 08:00 AM - Peak 1 of 1

Peak Hour for Each Approach Begins at:

	07:15 AM				07:15 AM				07:15 AM				07:15 AM			
+0 mins.	0	0	0	0	0	**2**	0	**2**	0	0	0	0	0	0	0	0
+15 mins.	0	0	0	0	0	0	0	0	0	0	0	0	0	0	**1**	1
+30 mins.	0	0	0	0	0	0	0	0	0	0	0	0	0	**2**	1	**3**
+45 mins.	0	0	0	0	0	1	0	1	0	0	0	0	0	0	0	0
Total Volume	0	0	0	0	0	3	0	3	0	0	0	0	0	2	2	4
% App. Total	0	0	0		0	100	0		0	0	0		0	50	50	
PHF	.000	.000	.000	.000	.000	.375	.000	.375	.000	.000	.000	.000	.000	.250	.500	.333

Counts Unlimited Inc.
PO Box 1178
Corona, CA 92878
(951) 268-6268

City of San Bernardino
N/S: E Street
E/W: 5th Street
Weather: Sunny

File Name : SBCE5PM
Site Code : 00000043
Start Date : 12/7/2011
Page No : 1

Groups Printed- Passenger Vehicles - Large 2 Axle Vehicles - 3 Axle Vehicles - 4+ Axle Trucks

	E Street Southbound				5th Street Westbound				E Street Northbound				5th Street Eastbound				
Start Time	Left	Thru	Right	App. Total	Left	Thru	Right	App. Total	Left	Thru	Right	App. Total	Left	Thru	Right	App. Total	Int. Total
04:00 PM	6	70	6	82	16	149	8	173	24	109	14	147	9	133	17	159	561
04:15 PM	5	86	12	103	5	143	13	161	19	81	12	112	5	117	8	130	506
04:30 PM	12	82	8	102	12	193	17	222	20	85	13	118	7	102	12	121	563
04:45 PM	8	67	13	88	12	170	13	195	24	92	5	121	13	109	13	135	539
Total	31	305	39	375	45	655	51	751	87	367	44	498	34	461	50	545	2169
05:00 PM	3	64	12	79	19	255	17	291	30	92	14	136	3	110	9	122	628
05:15 PM	4	48	10	62	5	176	8	189	21	102	7	130	9	87	8	104	485
05:30 PM	6	63	16	85	9	157	13	179	13	98	8	119	13	91	11	115	498
05:45 PM	5	55	7	67	5	108	3	116	18	95	8	121	11	81	9	101	405
Total	18	230	45	293	38	696	41	775	82	387	37	506	36	369	37	442	2016
Grand Total	49	535	84	668	83	1351	92	1526	169	754	81	1004	70	830	87	987	4185
Apprch %	7.3	80.1	12.6		5.4	88.5	6		16.8	75.1	8.1		7.1	84.1	8.8		
Total %	1.2	12.8	2	16	2	32.3	2.2	36.5	4	18	1.9	24	1.7	19.8	2.1	23.6	
Passenger Vehicles	48	523	84	655	82	1303	92	1477	167	745	81	993	69	784	85	938	4063
% Passenger Vehicles	98	97.8	100	98.1	98.8	96.4	100	96.8	98.8	98.8	100	98.9	98.6	94.5	97.7	95	97.1
Large 2 Axle Vehicles	1	11	0	12	1	41	0	42	2	7	0	9	1	39	2	42	105
% Large 2 Axle Vehicles	2	2.1	0	1.8	1.2	3	0	2.8	1.2	0.9	0	0.9	1.4	4.7	2.3	4.3	2.5
3 Axle Vehicles	0	0	0	0	0	4	0	4	0	0	0	0	0	4	0	4	8
% 3 Axle Vehicles	0	0	0	0	0	0.3	0	0.3	0	0	0	0	0	0.5	0	0.4	0.2
4+ Axle Trucks	0	1	0	1	0	3	0	3	0	2	0	2	0	3	0	3	9
% 4+ Axle Trucks	0	0.2	0	0.1	0	0.2	0	0.2	0	0.3	0	0.2	0	0.4	0	0.3	0.2

	E Street Southbound				5th Street Westbound				E Street Northbound				5th Street Eastbound				
Start Time	Left	Thru	Right	App. Total	Left	Thru	Right	App. Total	Left	Thru	Right	App. Total	Left	Thru	Right	App. Total	Int. Total
Peak Hour Analysis From 04:00 PM to 05:45 PM - Peak 1 of 1																	
Peak Hour for Entire Intersection Begins at 04:15 PM																	
04:15 PM	5	**86**	12	**103**	5	143	13	161	19	81	12	112	5	**117**	8	130	506
04:30 PM	**12**	82	8	102	12	193	**17**	222	20	85	13	118	7	102	12	121	563
04:45 PM	8	67	**13**	88	12	170	13	195	24	**92**	5	121	**13**	109	**13**	**135**	539
05:00 PM	3	64	12	79	**19**	**255**	17	**291**	**30**	92	**14**	**136**	3	110	9	122	**628**
Total Volume	28	299	45	372	48	761	60	869	93	350	44	487	28	438	42	508	2236
% App. Total	7.5	80.4	12.1		5.5	87.6	6.9		19.1	71.9	9		5.5	86.2	8.3		
PHF	.583	.869	.865	.903	.632	.746	.882	.747	.775	.951	.786	.895	.538	.936	.808	.941	.890

Counts Unlimited Inc.
PO Box 1178
Corona, CA 92878
(951) 268-6268

City of San Bernardino
N/S: E Street
E/W: 5th Street
Weather: Sunny

File Name : SBCE5PM
Site Code : 00000043
Start Date : 12/7/2011
Page No : 2

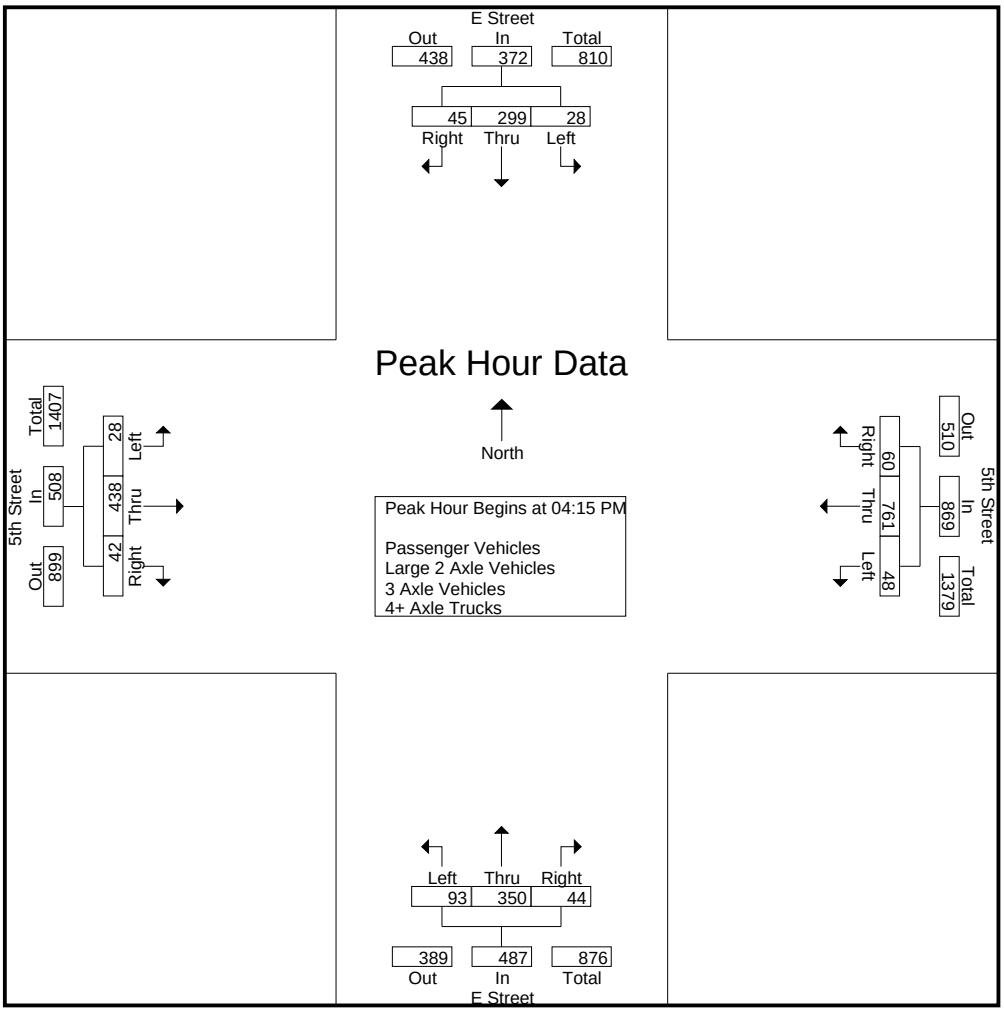

Peak Hour Analysis From 04:00 PM to 05:45 PM - Peak 1 of 1

Peak Hour for Each Approach Begins at:

	04:00 PM				04:30 PM				04:45 PM				04:00 PM			
+0 mins.	6	70	6	82	12	193	**17**	222	24	92	5	121	9	**133**	**17**	**159**
+15 mins.	5	**86**	12	**103**	12	170	13	195	**30**	92	**14**	**136**	5	117	8	130
+30 mins.	**12**	82	8	102	**19**	**255**	17	**291**	21	**102**	7	130	7	102	12	121
+45 mins.	8	67	**13**	88	5	176	8	189	13	98	8	119	**13**	109	13	135
Total Volume	31	305	39	375	48	794	55	897	88	384	34	506	34	461	50	545
% App. Total	8.3	81.3	10.4		5.4	88.5	6.1		17.4	75.9	6.7		6.2	84.6	9.2	
PHF	.646	.887	.750	.910	.632	.778	.809	.771	.733	.941	.607	.930	.654	.867	.735	.857

Counts Unlimited Inc.
PO Box 1178
Corona, CA 92878
(951) 268-6268

City of San Bernardino
N/S: E Street
E/W: 5th Street
Weather: Sunny

File Name : SBCE5PM
Site Code : 00000043
Start Date : 12/7/2011
Page No : 1

Groups Printed- Passenger Vehicles

	E Street Southbound				5th Street Westbound				E Street Northbound				5th Street Eastbound				
Start Time	Left	Thru	Right	App. Total	Left	Thru	Right	App. Total	Left	Thru	Right	App. Total	Left	Thru	Right	App. Total	Int. Total
04:00 PM	6	70	6	82	16	144	8	168	24	109	14	147	9	121	17	147	544
04:15 PM	4	81	12	97	5	135	13	153	19	81	12	112	5	110	8	123	485
04:30 PM	12	80	8	100	12	189	17	218	20	82	13	115	7	96	11	114	547
04:45 PM	8	66	13	87	12	163	13	188	23	90	5	118	13	103	12	128	521
Total	30	297	39	366	45	631	51	727	86	362	44	492	34	430	48	512	2097
05:00 PM	3	63	12	78	18	247	17	282	29	91	14	134	3	104	9	116	610
05:15 PM	4	48	10	62	5	171	8	184	21	102	7	130	8	86	8	102	478
05:30 PM	6	61	16	83	9	151	13	173	13	95	8	116	13	87	11	111	483
05:45 PM	5	54	7	66	5	103	3	111	18	95	8	121	11	77	9	97	395
Total	18	226	45	289	37	672	41	750	81	383	37	501	35	354	37	426	1966
Grand Total	48	523	84	655	82	1303	92	1477	167	745	81	993	69	784	85	938	4063
Apprch %	7.3	79.8	12.8		5.6	88.2	6.2		16.8	75	8.2		7.4	83.6	9.1		
Total %	1.2	12.9	2.1	16.1	2	32.1	2.3	36.4	4.1	18.3	2	24.4	1.7	19.3	2.1	23.1	

	E Street Southbound				5th Street Westbound				E Street Northbound				5th Street Eastbound				
Start Time	Left	Thru	Right	App. Total	Left	Thru	Right	App. Total	Left	Thru	Right	App. Total	Left	Thru	Right	App. Total	Int. Total
Peak Hour Analysis From 04:15 PM to 05:00 PM - Peak 1 of 1																	
Peak Hour for Entire Intersection Begins at 04:15 PM																	
04:15 PM	4	**81**	12	97	5	135	13	153	19	81	12	112	5	**110**	8	123	485
04:30 PM	**12**	80	8	**100**	12	189	**17**	218	20	82	13	115	7	96	11	114	547
04:45 PM	8	66	**13**	87	12	163	13	188	23	90	5	118	**13**	103	**12**	**128**	521
05:00 PM	3	63	12	78	**18**	**247**	17	**282**	**29**	**91**	**14**	**134**	3	104	9	116	**610**
Total Volume	27	290	45	362	47	734	60	841	91	344	44	479	28	413	40	481	2163
% App. Total	7.5	80.1	12.4		5.6	87.3	7.1		19	71.8	9.2		5.8	85.9	8.3		
PHF	.563	.895	.865	.905	.653	.743	.882	.746	.784	.945	.786	.894	.538	.939	.833	.939	.886

Counts Unlimited Inc.
PO Box 1178
Corona, CA 92878
(951) 268-6268

City of San Bernardino
N/S: E Street
E/W: 5th Street
Weather: Sunny

File Name : SBCE5PM
Site Code : 00000043
Start Date : 12/7/2011
Page No : 2

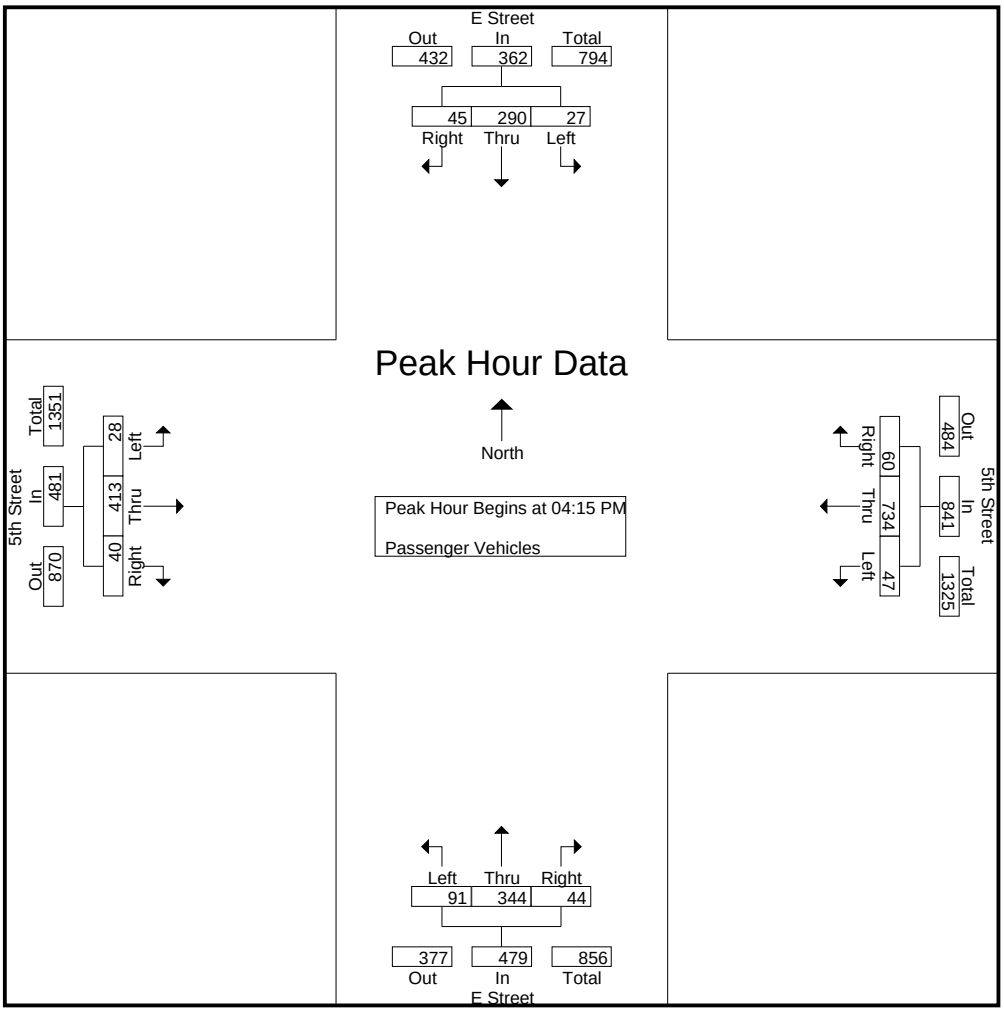

Peak Hour Analysis From 04:15 PM to 05:00 PM - Peak 1 of 1

Peak Hour for Each Approach Begins at:

	04:15 PM				04:15 PM				04:15 PM				04:15 PM			
+0 mins.	4	**81**	12	97	5	135	13	153	19	81	12	112	5	**110**	8	123
+15 mins.	**12**	80	8	**100**	12	189	**17**	218	20	82	13	115	7	96	11	114
+30 mins.	8	66	**13**	87	12	163	13	188	23	90	5	118	**13**	103	**12**	**128**
+45 mins.	3	63	12	78	**18**	**247**	17	**282**	**29**	**91**	**14**	**134**	3	104	9	116
Total Volume	27	290	45	362	47	734	60	841	91	344	44	479	28	413	40	481
% App. Total	7.5	80.1	12.4		5.6	87.3	7.1		19	71.8	9.2		5.8	85.9	8.3	
PHF	.563	.895	.865	.905	.653	.743	.882	.746	.784	.945	.786	.894	.538	.939	.833	.939

Counts Unlimited Inc.
PO Box 1178
Corona, CA 92878
(951) 268-6268

City of San Bernardino
N/S: E Street
E/W: 5th Street
Weather: Sunny

File Name : SBCE5PM
Site Code : 00000043
Start Date : 12/7/2011
Page No : 1

Groups Printed- Large 2 Axle Vehicles

	E Street Southbound				5th Street Westbound				E Street Northbound				5th Street Eastbound				
Start Time	Left	Thru	Right	App. Total	Left	Thru	Right	App. Total	Left	Thru	Right	App. Total	Left	Thru	Right	App. Total	Int. Total
04:00 PM	0	0	0	0	0	4	0	4	0	0	0	0	0	9	0	9	13
04:15 PM	1	5	0	6	0	8	0	8	0	0	0	0	0	5	0	5	19
04:30 PM	0	2	0	2	0	4	0	4	0	3	0	3	0	6	1	7	16
04:45 PM	0	1	0	1	0	5	0	5	1	1	0	2	0	5	1	6	14
Total	1	8	0	9	0	21	0	21	1	4	0	5	0	25	2	27	62
05:00 PM	0	1	0	1	1	6	0	7	1	1	0	2	0	5	0	5	15
05:15 PM	0	0	0	0	0	4	0	4	0	0	0	0	1	1	0	2	6
05:30 PM	0	2	0	2	0	6	0	6	0	2	0	2	0	4	0	4	14
05:45 PM	0	0	0	0	0	4	0	4	0	0	0	0	0	4	0	4	8
Total	0	3	0	3	1	20	0	21	1	3	0	4	1	14	0	15	43
Grand Total	1	11	0	12	1	41	0	42	2	7	0	9	1	39	2	42	105
Apprch %	8.3	91.7	0		2.4	97.6	0		22.2	77.8	0		2.4	92.9	4.8		
Total %	1	10.5	0	11.4	1	39	0	40	1.9	6.7	0	8.6	1	37.1	1.9	40	

	E Street Southbound				5th Street Westbound				E Street Northbound				5th Street Eastbound				
Start Time	Left	Thru	Right	App. Total	Left	Thru	Right	App. Total	Left	Thru	Right	App. Total	Left	Thru	Right	App. Total	Int. Total
Peak Hour Analysis From 04:15 PM to 05:00 PM - Peak 1 of 1																	
Peak Hour for Entire Intersection Begins at 04:15 PM																	
04:15 PM	**1**	**5**	0	**6**	0	**8**	0	**8**	0	0	0	0	0	5	0	5	**19**
04:30 PM	0	2	0	2	0	4	0	4	0	**3**	0	**3**	0	**6**	**1**	**7**	16
04:45 PM	0	1	0	1	0	5	0	5	**1**	1	0	2	0	5	1	6	14
05:00 PM	0	1	0	1	**1**	6	0	7	1	1	0	2	0	5	0	5	15
Total Volume	1	9	0	10	1	23	0	24	2	5	0	7	0	21	2	23	64
% App. Total	10	90	0		4.2	95.8	0		28.6	71.4	0		0	91.3	8.7		
PHF	.250	.450	.000	.417	.250	.719	.000	.750	.500	.417	.000	.583	.000	.875	.500	.821	.842

Counts Unlimited Inc.
PO Box 1178
Corona, CA 92878
(951) 268-6268

City of San Bernardino
N/S: E Street
E/W: 5th Street
Weather: Sunny

File Name : SBCE5PM
Site Code : 00000043
Start Date : 12/7/2011
Page No : 2

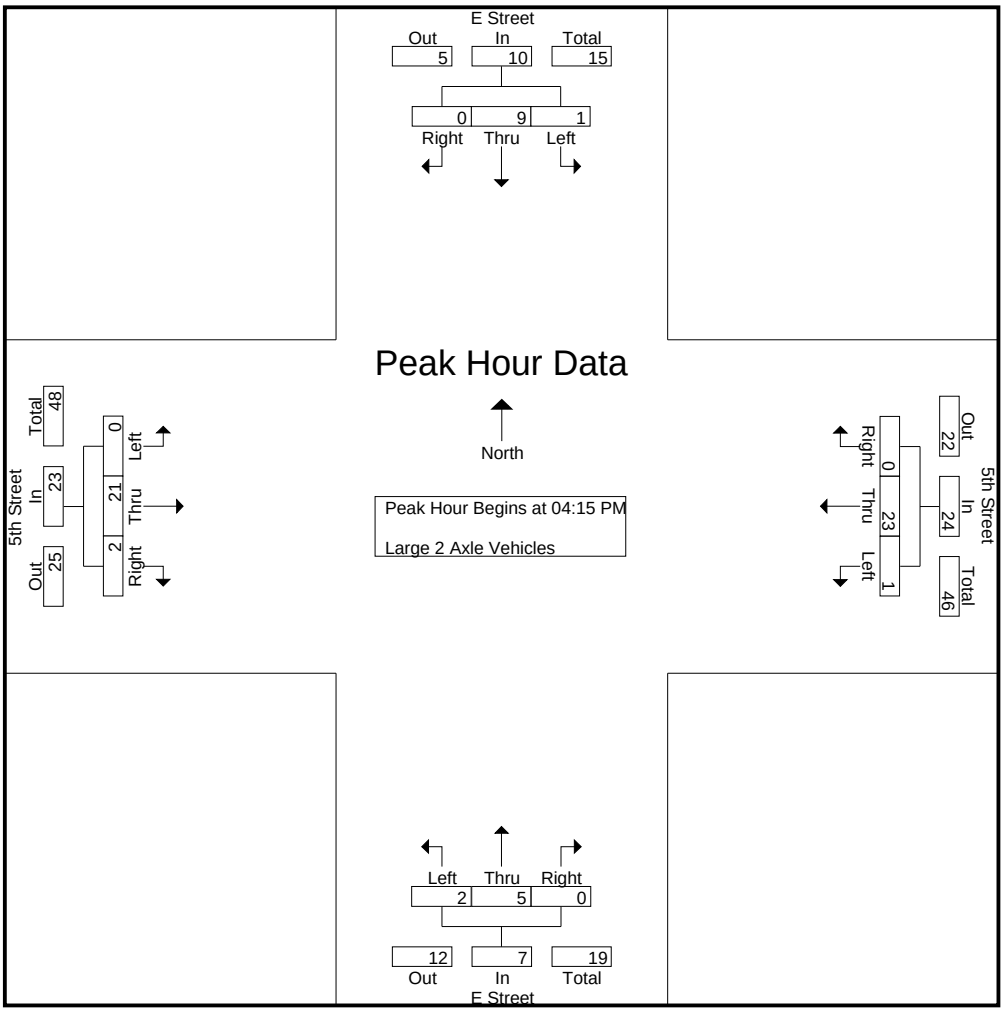

Peak Hour Analysis From 04:15 PM to 05:00 PM - Peak 1 of 1

Peak Hour for Each Approach Begins at:

	04:15 PM				04:15 PM				04:15 PM				04:15 PM			
+0 mins.	**1**	**5**	0	**6**	0	**8**	0	**8**	0	0	0	0	0	5	0	5
+15 mins.	0	2	0	2	0	4	0	4	0	**3**	0	**3**	0	**6**	**1**	**7**
+30 mins.	0	1	0	1	0	5	0	5	**1**	1	0	2	0	5	1	6
+45 mins.	0	1	0	1	**1**	6	0	7	1	1	0	2	0	5	0	5
Total Volume	1	9	0	10	1	23	0	24	2	5	0	7	0	21	2	23
% App. Total	10	90	0		4.2	95.8	0		28.6	71.4	0		0	91.3	8.7	
PHF	.250	.450	.000	.417	.250	.719	.000	.750	.500	.417	.000	.583	.000	.875	.500	.821

Counts Unlimited Inc.
PO Box 1178
Corona, CA 92878
(951) 268-6268

City of San Bernardino
N/S: E Street
E/W: 5th Street
Weather: Sunny

File Name : SBCE5PM
Site Code : 00000043
Start Date : 12/7/2011
Page No : 1

Groups Printed- 3 Axle Vehicles

	E Street Southbound				5th Street Westbound				E Street Northbound				5th Street Eastbound				
Start Time	Left	Thru	Right	App. Total	Left	Thru	Right	App. Total	Left	Thru	Right	App. Total	Left	Thru	Right	App. Total	Int. Total
04:00 PM	0	0	0	0	0	1	0	1	0	0	0	0	0	2	0	2	3
04:15 PM	0	0	0	0	0	0	0	0	0	0	0	0	0	1	0	1	1
04:30 PM	0	0	0	0	0	0	0	0	0	0	0	0	0	0	0	0	0
04:45 PM	0	0	0	0	0	2	0	2	0	0	0	0	0	0	0	0	2
Total	0	0	0	0	0	3	0	3	0	0	0	0	0	3	0	3	6
05:00 PM	0	0	0	0	0	1	0	1	0	0	0	0	0	1	0	1	2
05:15 PM	0	0	0	0	0	0	0	0	0	0	0	0	0	0	0	0	0
05:30 PM	0	0	0	0	0	0	0	0	0	0	0	0	0	0	0	0	0
05:45 PM	0	0	0	0	0	0	0	0	0	0	0	0	0	0	0	0	0
Total	0	0	0	0	0	1	0	1	0	0	0	0	0	1	0	1	2
Grand Total	0	0	0	0	0	4	0	4	0	0	0	0	0	4	0	4	8
Apprch %	0	0	0		0	100	0		0	0	0		0	100	0		
Total %	0	0	0	0	0	50	0	50	0	0	0	0	0	50	0	50	

	E Street Southbound				5th Street Westbound				E Street Northbound				5th Street Eastbound				
Start Time	Left	Thru	Right	App. Total	Left	Thru	Right	App. Total	Left	Thru	Right	App. Total	Left	Thru	Right	App. Total	Int. Total
Peak Hour Analysis From 04:15 PM to 05:00 PM - Peak 1 of 1																	
Peak Hour for Entire Intersection Begins at 04:15 PM																	
04:15 PM	0	0	0	0	0	0	0	0	0	0	0	0	0	**1**	0	**1**	1
04:30 PM	0	0	0	0	0	0	0	0	0	0	0	0	0	0	0	0	0
04:45 PM	0	0	0	0	0	**2**	0	**2**	0	0	0	0	0	0	0	0	**2**
05:00 PM	0	0	0	0	0	1	0	1	0	0	0	0	0	1	0	1	2
Total Volume	0	0	0	0	0	3	0	3	0	0	0	0	0	2	0	2	5
% App. Total	0	0	0		0	100	0		0	0	0		0	100	0		
PHF	.000	.000	.000	.000	.000	.375	.000	.375	.000	.000	.000	.000	.000	.500	.000	.500	.625

Counts Unlimited Inc.
PO Box 1178
Corona, CA 92878
(951) 268-6268

City of San Bernardino
N/S: E Street
E/W: 5th Street
Weather: Sunny

File Name : SBCE5PM
Site Code : 00000043
Start Date : 12/7/2011
Page No : 2

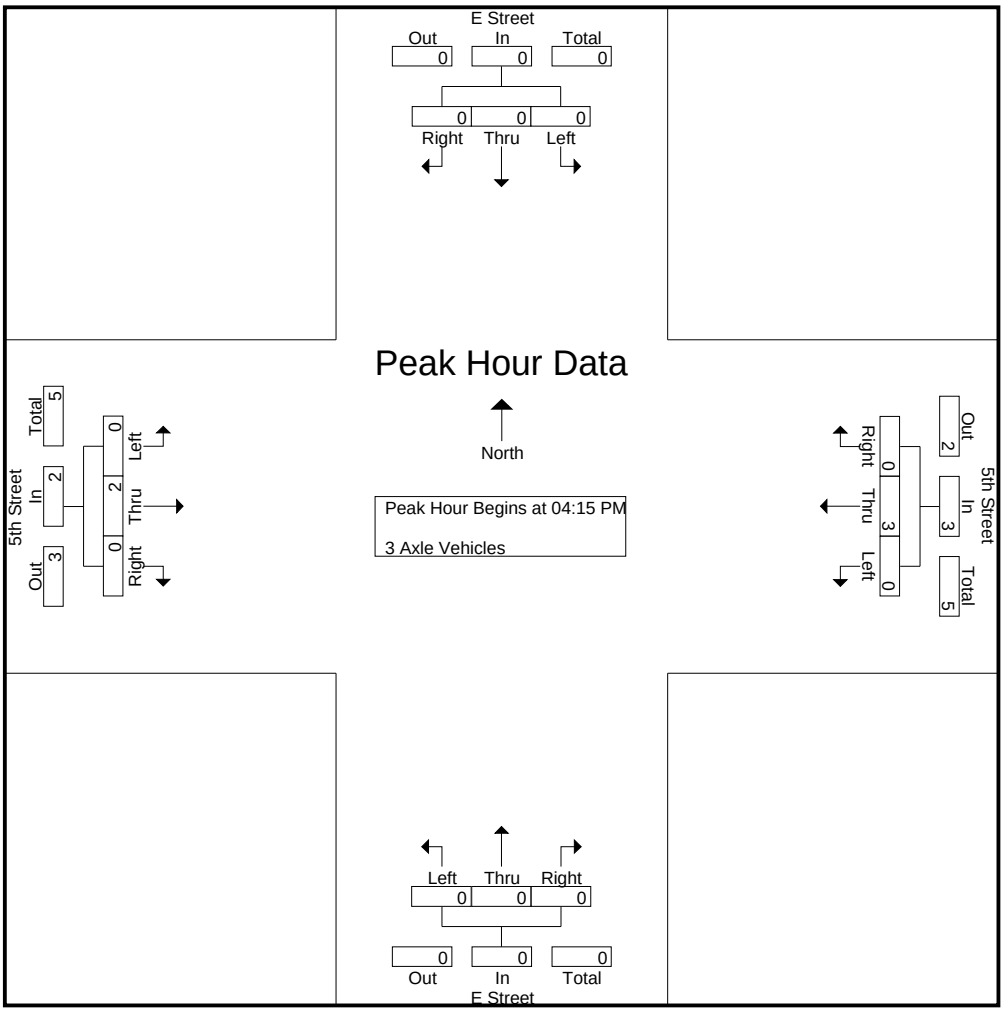

Peak Hour Analysis From 04:15 PM to 05:00 PM - Peak 1 of 1

Peak Hour for Each Approach Begins at:

	04:15 PM				04:15 PM				04:15 PM				04:15 PM			
+0 mins.	0	0	0	0	0	0	0	0	0	0	0	0	0	**1**	0	**1**
+15 mins.	0	0	0	0	0	0	0	0	0	0	0	0	0	0	0	0
+30 mins.	0	0	0	0	0	**2**	0	**2**	0	0	0	0	0	0	0	0
+45 mins.	0	0	0	0	0	1	0	1	0	0	0	0	0	1	0	1
Total Volume	0	0	0	0	0	3	0	3	0	0	0	0	0	2	0	2
% App. Total	0	0	0		0	100	0		0	0	0		0	100	0	
PHF	.000	.000	.000	.000	.000	.375	.000	.375	.000	.000	.000	.000	.000	.500	.000	.500

Counts Unlimited Inc.
PO Box 1178
Corona, CA 92878
(951) 268-6268

City of San Bernardino
N/S: E Street
E/W: 5th Street
Weather: Sunny

File Name : SBCE5PM
Site Code : 00000043
Start Date : 12/7/2011
Page No : 1

Groups Printed- 4+ Axle Trucks

	E Street Southbound				5th Street Westbound				E Street Northbound				5th Street Eastbound				
Start Time	Left	Thru	Right	App. Total	Left	Thru	Right	App. Total	Left	Thru	Right	App. Total	Left	Thru	Right	App. Total	Int. Total
04:00 PM	0	0	0	0	0	0	0	0	0	0	0	0	0	1	0	1	1
04:15 PM	0	0	0	0	0	0	0	0	0	0	0	0	0	1	0	1	1
04:30 PM	0	0	0	0	0	0	0	0	0	0	0	0	0	0	0	0	0
04:45 PM	0	0	0	0	0	0	0	0	0	1	0	1	0	1	0	1	2
Total	0	0	0	0	0	0	0	0	0	1	0	1	0	3	0	3	4
05:00 PM	0	0	0	0	0	1	0	1	0	0	0	0	0	0	0	0	1
05:15 PM	0	0	0	0	0	1	0	1	0	0	0	0	0	0	0	0	1
05:30 PM	0	0	0	0	0	0	0	0	0	1	0	1	0	0	0	0	1
05:45 PM	0	1	0	1	0	1	0	1	0	0	0	0	0	0	0	0	2
Total	0	1	0	1	0	3	0	3	0	1	0	1	0	0	0	0	5
Grand Total	0	1	0	1	0	3	0	3	0	2	0	2	0	3	0	3	9
Apprch %	0	100	0		0	100	0		0	100	0		0	100	0		
Total %	0	11.1	0	11.1	0	33.3	0	33.3	0	22.2	0	22.2	0	33.3	0	33.3	

	E Street Southbound				5th Street Westbound				E Street Northbound				5th Street Eastbound				
Start Time	Left	Thru	Right	App. Total	Left	Thru	Right	App. Total	Left	Thru	Right	App. Total	Left	Thru	Right	App. Total	Int. Total
Peak Hour Analysis From 04:15 PM to 05:00 PM - Peak 1 of 1																	
Peak Hour for Entire Intersection Begins at 04:15 PM																	
04:15 PM	0	0	0	0	0	0	0	0	0	0	0	0	0	**1**	0	**1**	1
04:30 PM	0	0	0	0	0	0	0	0	0	0	0	0	0	0	0	0	0
04:45 PM	0	0	0	0	0	0	0	0	0	**1**	0	**1**	0	1	0	1	**2**
05:00 PM	0	0	0	0	0	**1**	0	**1**	0	0	0	0	0	0	0	0	1
Total Volume	0	0	0	0	0	1	0	1	0	1	0	1	0	2	0	2	4
% App. Total	0	0	0		0	100	0		0	100	0		0	100	0		
PHF	.000	.000	.000	.000	.000	.250	.000	.250	.000	.250	.000	.250	.000	.500	.000	.500	.500

Counts Unlimited Inc.
PO Box 1178
Corona, CA 92878
(951) 268-6268

City of San Bernardino
N/S: E Street
E/W: 5th Street
Weather: Sunny

File Name : SBCE5PM
Site Code : 00000043
Start Date : 12/7/2011
Page No : 2

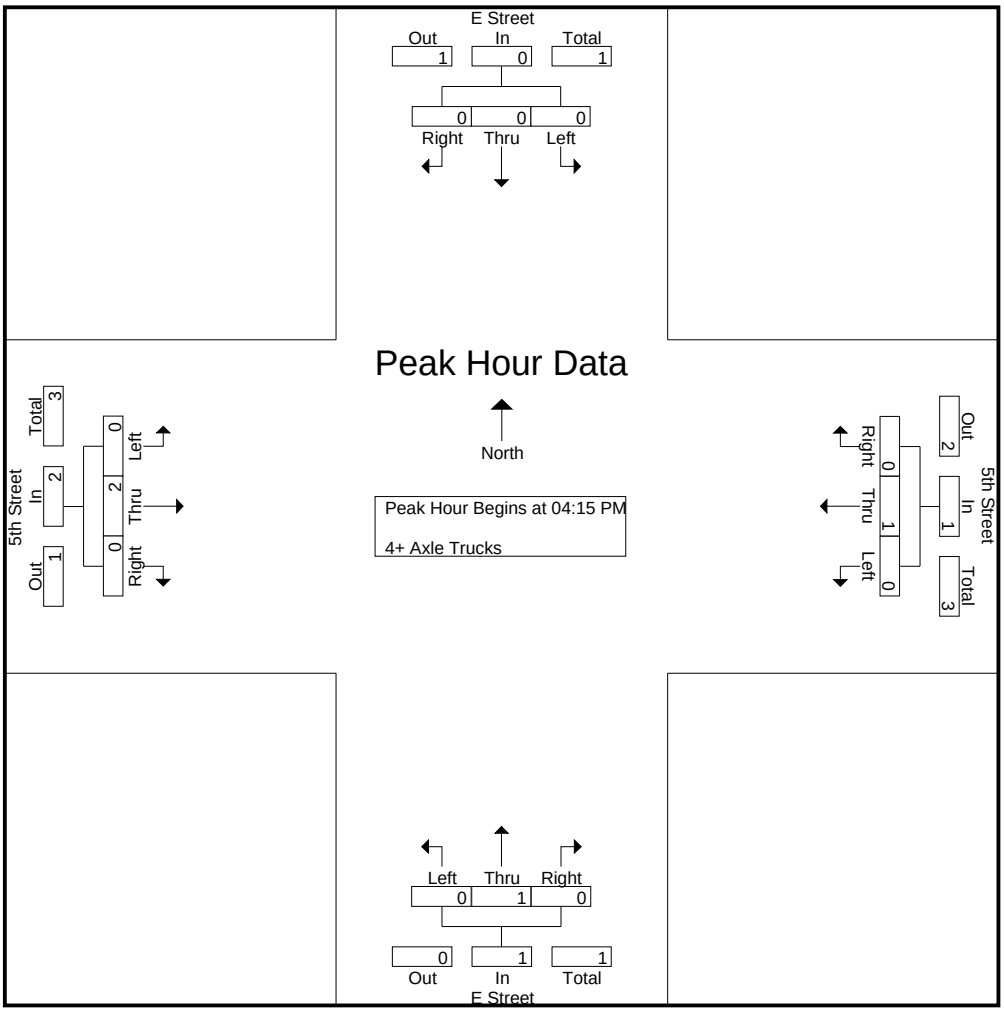

Peak Hour Analysis From 04:15 PM to 05:00 PM - Peak 1 of 1

Peak Hour for Each Approach Begins at:

	04:15 PM				04:15 PM				04:15 PM				04:15 PM			
+0 mins.	0	0	0	0	0	0	0	0	0	0	0	0	0	**1**	0	**1**
+15 mins.	0	0	0	0	0	0	0	0	0	0	0	0	0	0	0	0
+30 mins.	0	0	0	0	0	0	0	0	0	**1**	0	**1**	0	1	0	1
+45 mins.	0	0	0	0	0	**1**	0	**1**	0	0	0	0	0	0	0	0
Total Volume	0	0	0	0	0	1	0	1	0	1	0	1	0	2	0	2
% App. Total	0	0	0		0	100	0		0	100	0		0	100	0	
PHF	.000	.000	.000	.000	.000	.250	.000	.250	.000	.250	.000	.250	.000	.500	.000	.500

Counts Unlimited Inc.
PO Box 1178
Corona, CA 92878
(951) 268-6268

City of San Bernardino
N/S: E Street
E/W: 4th Street
Weather: Sunny

File Name : SBCE4AM
Site Code : 00000125
Start Date : 12/7/2011
Page No : 1

Groups Printed- Passenger Vehicles - Large 2 Axle Vehicles - 3 Axle Vehicles - 4+ Axle Trucks

	Southbound				Westbound				Northbound				Eastbound				
Start Time	Left	Thru	Right	App. Total	Left	Thru	Right	App. Total	Left	Thru	Right	App. Total	Left	Thru	Right	App. Total	Int. Total
07:00 AM	1	71	4	76	1	4	1	6	5	45	22	72	1	14	8	23	177
07:15 AM	1	81	5	87	2	7	1	10	6	56	26	88	2	18	10	30	215
07:30 AM	2	108	6	116	5	10	2	17	7	65	27	99	0	22	2	24	256
07:45 AM	3	94	3	100	3	7	2	12	5	69	19	93	1	16	14	31	236
Total	7	354	18	379	11	28	6	45	23	235	94	352	4	70	34	108	884
08:00 AM	6	54	6	66	3	8	6	17	5	52	27	84	2	10	6	18	185
08:15 AM	1	69	2	72	2	11	4	17	4	44	23	71	2	10	7	19	179
08:30 AM	9	76	5	90	5	9	15	29	4	55	24	83	0	16	9	25	227
08:45 AM	0	65	4	69	4	8	8	20	4	51	22	77	2	12	8	22	188
Total	16	264	17	297	14	36	33	83	17	202	96	315	6	48	30	84	779
Grand Total	23	618	35	676	25	64	39	128	40	437	190	667	10	118	64	192	1663
Apprch %	3.4	91.4	5.2		19.5	50	30.5		6	65.5	28.5		5.2	61.5	33.3		
Total %	1.4	37.2	2.1	40.6	1.5	3.8	2.3	7.7	2.4	26.3	11.4	40.1	0.6	7.1	3.8	11.5	
Passenger Vehicles	23	598	34	655	24	62	38	124	38	431	190	659	10	114	64	188	1626
% Passenger Vehicles	100	96.8	97.1	96.9	96	96.9	97.4	96.9	95	98.6	100	98.8	100	96.6	100	97.9	97.8
Large 2 Axle Vehicles	0	19	0	19	1	2	1	4	2	6	0	8	0	4	0	4	35
% Large 2 Axle Vehicles	0	3.1	0	2.8	4	3.1	2.6	3.1	5	1.4	0	1.2	0	3.4	0	2.1	2.1
3 Axle Vehicles	0	0	0	0	0	0	0	0	0	0	0	0	0	0	0	0	0
% 3 Axle Vehicles	0	0	0	0	0	0	0	0	0	0	0	0	0	0	0	0	0
4+ Axle Trucks	0	1	1	2	0	0	0	0	0	0	0	0	0	0	0	0	2
% 4+ Axle Trucks	0	0.2	2.9	0.3	0	0	0	0	0	0	0	0	0	0	0	0	0.1

	Southbound				Westbound				Northbound				Eastbound				
Start Time	Left	Thru	Right	App. Total	Left	Thru	Right	App. Total	Left	Thru	Right	App. Total	Left	Thru	Right	App. Total	Int. Total
Peak Hour Analysis From 07:00 AM to 08:45 AM - Peak 1 of 1																	
Peak Hour for Entire Intersection Begins at 07:15 AM																	
07:15 AM	1	81	5	87	2	7	1	10	6	56	26	88	**2**	18	10	30	215
07:30 AM	2	**108**	**6**	**116**	**5**	**10**	2	**17**	**7**	65	**27**	**99**	0	**22**	2	24	**256**
07:45 AM	3	94	3	100	3	7	2	12	5	**69**	19	93	1	16	**14**	**31**	236
08:00 AM	**6**	54	6	66	3	8	**6**	17	5	52	27	84	2	10	6	18	185
Total Volume	12	337	20	369	13	32	11	56	23	242	99	364	5	66	32	103	892
% App. Total	3.3	91.3	5.4		23.2	57.1	19.6		6.3	66.5	27.2		4.9	64.1	31.1		
PHF	.500	.780	.833	.795	.650	.800	.458	.824	.821	.877	.917	.919	.625	.750	.571	.831	.871

Counts Unlimited Inc.
PO Box 1178
Corona, CA 92878
(951) 268-6268

City of San Bernardino
N/S: E Street
E/W: 4th Street
Weather: Sunny

File Name : SBCE4AM
Site Code : 00000125
Start Date : 12/7/2011
Page No : 2

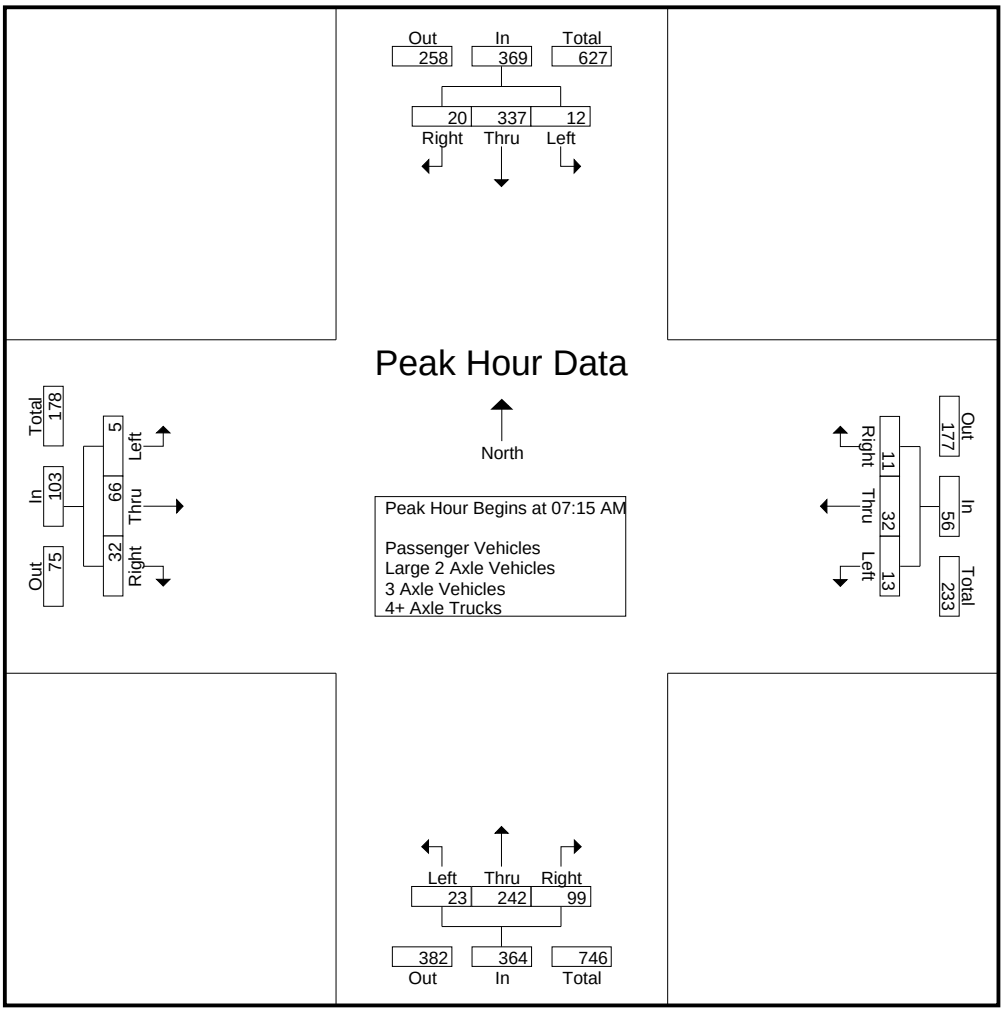

Peak Hour Analysis From 07:00 AM to 08:45 AM - Peak 1 of 1

Peak Hour for Each Approach Begins at:

	07:00 AM				08:00 AM				07:15 AM				07:00 AM			
+0 mins.	1	71	4	76	3	8	6	17	6	56	26	88	1	14	8	23
+15 mins.	1	81	5	87	2	**11**	4	17	**7**	65	**27**	**99**	**2**	18	10	30
+30 mins.	2	**108**	**6**	**116**	**5**	9	**15**	**29**	5	**69**	19	93	0	**22**	2	24
+45 mins.	**3**	94	3	100	4	8	8	20	5	52	27	84	1	16	**14**	**31**
Total Volume	7	354	18	379	14	36	33	83	23	242	99	364	4	70	34	108
% App. Total	1.8	93.4	4.7		16.9	43.4	39.8		6.3	66.5	27.2		3.7	64.8	31.5	
PHF	.583	.819	.750	.817	.700	.818	.550	.716	.821	.877	.917	.919	.500	.795	.607	.871

Counts Unlimited Inc.
PO Box 1178
Corona, CA 92878
(951) 268-6268

City of San Bernardino
N/S: E Street
E/W: 4th Street
Weather: Sunny

File Name : SBCE4AM
Site Code : 00000125
Start Date : 12/7/2011
Page No : 1

Groups Printed- Passenger Vehicles

	Southbound				Westbound				Northbound				Eastbound				
Start Time	Left	Thru	Right	App. Total	Left	Thru	Right	App. Total	Left	Thru	Right	App. Total	Left	Thru	Right	App. Total	Int. Total
07:00 AM	1	69	4	74	1	4	1	6	5	45	22	72	1	14	8	23	175
07:15 AM	1	77	5	83	1	7	1	9	6	53	26	85	2	18	10	30	207
07:30 AM	2	103	5	110	5	10	2	17	6	65	27	98	0	21	2	23	248
07:45 AM	3	93	3	99	3	6	2	11	5	69	19	93	1	16	14	31	234
Total	7	342	17	366	10	27	6	43	22	232	94	348	4	69	34	107	864
08:00 AM	6	54	6	66	3	8	6	17	5	51	27	83	2	9	6	17	183
08:15 AM	1	67	2	70	2	10	4	16	3	42	23	68	2	10	7	19	173
08:30 AM	9	70	5	84	5	9	14	28	4	55	24	83	0	14	9	23	218
08:45 AM	0	65	4	69	4	8	8	20	4	51	22	77	2	12	8	22	188
Total	16	256	17	289	14	35	32	81	16	199	96	311	6	45	30	81	762
Grand Total	23	598	34	655	24	62	38	124	38	431	190	659	10	114	64	188	1626
Apprch %	3.5	91.3	5.2		19.4	50	30.6		5.8	65.4	28.8		5.3	60.6	34		
Total %	1.4	36.8	2.1	40.3	1.5	3.8	2.3	7.6	2.3	26.5	11.7	40.5	0.6	7	3.9	11.6	

	Southbound				Westbound				Northbound				Eastbound				
Start Time	Left	Thru	Right	App. Total	Left	Thru	Right	App. Total	Left	Thru	Right	App. Total	Left	Thru	Right	App. Total	Int. Total
Peak Hour Analysis From 07:15 AM to 08:00 AM - Peak 1 of 1																	
Peak Hour for Entire Intersection Begins at 07:15 AM																	
07:15 AM	1	77	5	83	1	7	1	9	**6**	53	26	85	**2**	18	10	30	207
07:30 AM	2	**103**	5	**110**	**5**	**10**	2	**17**	6	65	**27**	**98**	0	**21**	2	23	**248**
07:45 AM	3	93	3	99	3	6	2	11	5	**69**	19	93	1	16	**14**	**31**	234
08:00 AM	**6**	54	**6**	66	3	8	**6**	17	5	51	27	83	2	9	6	17	183
Total Volume	12	327	19	358	12	31	11	54	22	238	99	359	5	64	32	101	872
% App. Total	3.4	91.3	5.3		22.2	57.4	20.4		6.1	66.3	27.6		5	63.4	31.7		
PHF	.500	.794	.792	.814	.600	.775	.458	.794	.917	.862	.917	.916	.625	.762	.571	.815	.879

Counts Unlimited Inc.
PO Box 1178
Corona, CA 92878
(951) 268-6268

City of San Bernardino
N/S: E Street
E/W: 4th Street
Weather: Sunny

File Name : SBCE4AM
Site Code : 00000125
Start Date : 12/7/2011
Page No : 2

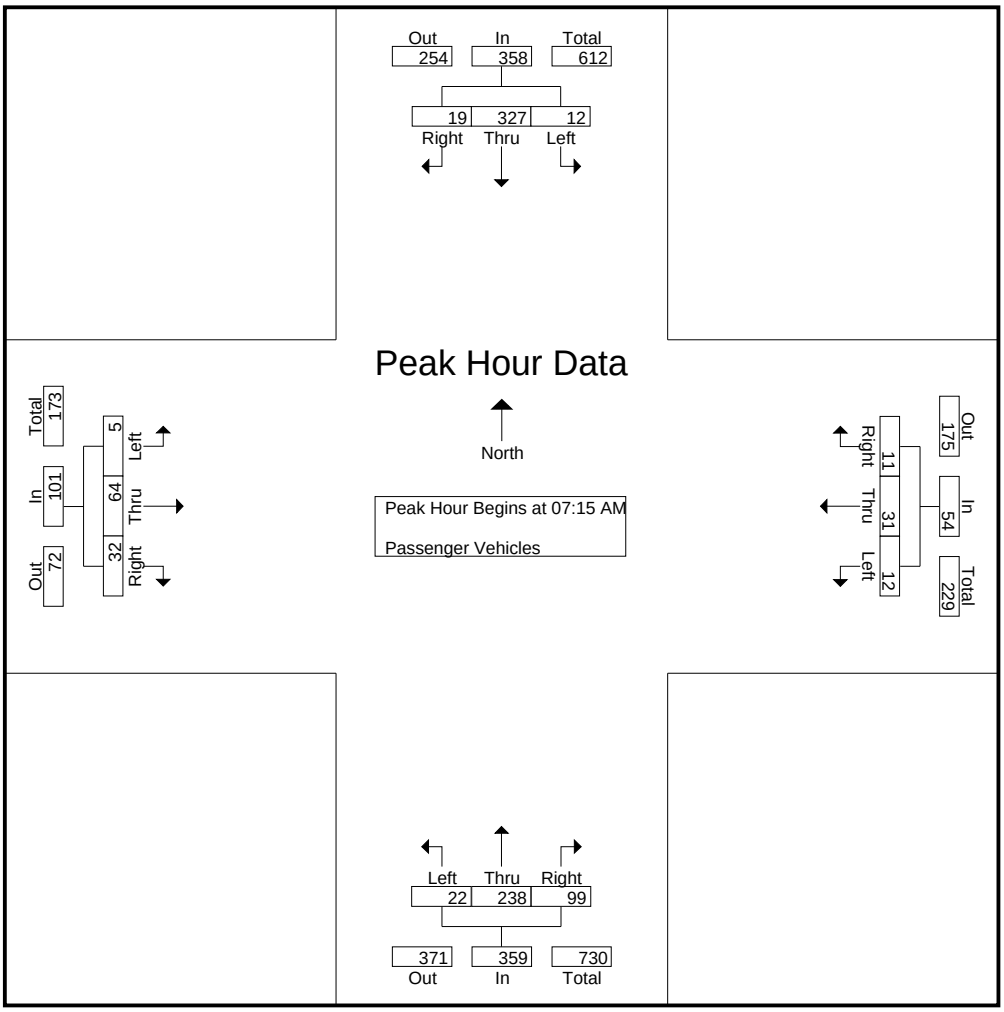

Peak Hour Analysis From 07:15 AM to 08:00 AM - Peak 1 of 1

Peak Hour for Each Approach Begins at:

	07:15 AM				07:15 AM				07:15 AM				07:15 AM			
+0 mins.	1	77	5	83	1	7	1	9	**6**	53	26	85	**2**	18	10	30
+15 mins.	2	**103**	5	**110**	**5**	**10**	2	**17**	6	65	**27**	**98**	0	**21**	2	23
+30 mins.	3	93	3	99	3	6	2	11	5	**69**	19	93	1	16	**14**	**31**
+45 mins.	**6**	54	**6**	66	3	8	**6**	17	5	51	27	83	2	9	6	17
Total Volume	12	327	19	358	12	31	11	54	22	238	99	359	5	64	32	101
% App. Total	3.4	91.3	5.3		22.2	57.4	20.4		6.1	66.3	27.6		5	63.4	31.7	
PHF	.500	.794	.792	.814	.600	.775	.458	.794	.917	.862	.917	.916	.625	.762	.571	.815

Counts Unlimited Inc.
PO Box 1178
Corona, CA 92878
(951) 268-6268

City of San Bernardino
N/S: E Street
E/W: 4th Street
Weather: Sunny

File Name : SBCE4AM
Site Code : 00000125
Start Date : 12/7/2011
Page No : 1

Groups Printed- Large 2 Axle Vehicles

	Southbound				Westbound				Northbound				Eastbound				
Start Time	Left	Thru	Right	App. Total	Left	Thru	Right	App. Total	Left	Thru	Right	App. Total	Left	Thru	Right	App. Total	Int. Total
07:00 AM	0	2	0	2	0	0	0	0	0	0	0	0	0	0	0	0	2
07:15 AM	0	3	0	3	1	0	0	1	0	3	0	3	0	0	0	0	7
07:30 AM	0	5	0	5	0	0	0	0	1	0	0	1	0	1	0	1	7
07:45 AM	0	1	0	1	0	1	0	1	0	0	0	0	0	0	0	0	2
Total	0	11	0	11	1	1	0	2	1	3	0	4	0	1	0	1	18
08:00 AM	0	0	0	0	0	0	0	0	0	1	0	1	0	1	0	1	2
08:15 AM	0	2	0	2	0	1	0	1	1	2	0	3	0	0	0	0	6
08:30 AM	0	6	0	6	0	0	1	1	0	0	0	0	0	2	0	2	9
08:45 AM	0	0	0	0	0	0	0	0	0	0	0	0	0	0	0	0	0
Total	0	8	0	8	0	1	1	2	1	3	0	4	0	3	0	3	17
Grand Total	0	19	0	19	1	2	1	4	2	6	0	8	0	4	0	4	35
Apprch %	0	100	0		25	50	25		25	75	0		0	100	0		
Total %	0	54.3	0	54.3	2.9	5.7	2.9	11.4	5.7	17.1	0	22.9	0	11.4	0	11.4	

	Southbound				Westbound				Northbound				Eastbound				
Start Time	Left	Thru	Right	App. Total	Left	Thru	Right	App. Total	Left	Thru	Right	App. Total	Left	Thru	Right	App. Total	Int. Total
Peak Hour Analysis From 07:15 AM to 08:00 AM - Peak 1 of 1																	
Peak Hour for Entire Intersection Begins at 07:15 AM																	
07:15 AM	0	3	0	3	**1**	0	0	**1**	0	**3**	0	**3**	0	0	0	0	**7**
07:30 AM	0	**5**	0	**5**	0	0	0	0	**1**	0	0	1	0	**1**	0	**1**	7
07:45 AM	0	1	0	1	0	**1**	0	1	0	0	0	0	0	0	0	0	2
08:00 AM	0	0	0	0	0	0	0	0	0	1	0	1	0	1	0	1	2
Total Volume	0	9	0	9	1	1	0	2	1	4	0	5	0	2	0	2	18
% App. Total	0	100	0		50	50	0		20	80	0		0	100	0		
PHF	.000	.450	.000	.450	.250	.250	.000	.500	.250	.333	.000	.417	.000	.500	.000	.500	.643

Counts Unlimited Inc.
PO Box 1178
Corona, CA 92878
(951) 268-6268

City of San Bernardino
N/S: E Street
E/W: 4th Street
Weather: Sunny

File Name : SBCE4AM
Site Code : 00000125
Start Date : 12/7/2011
Page No : 2

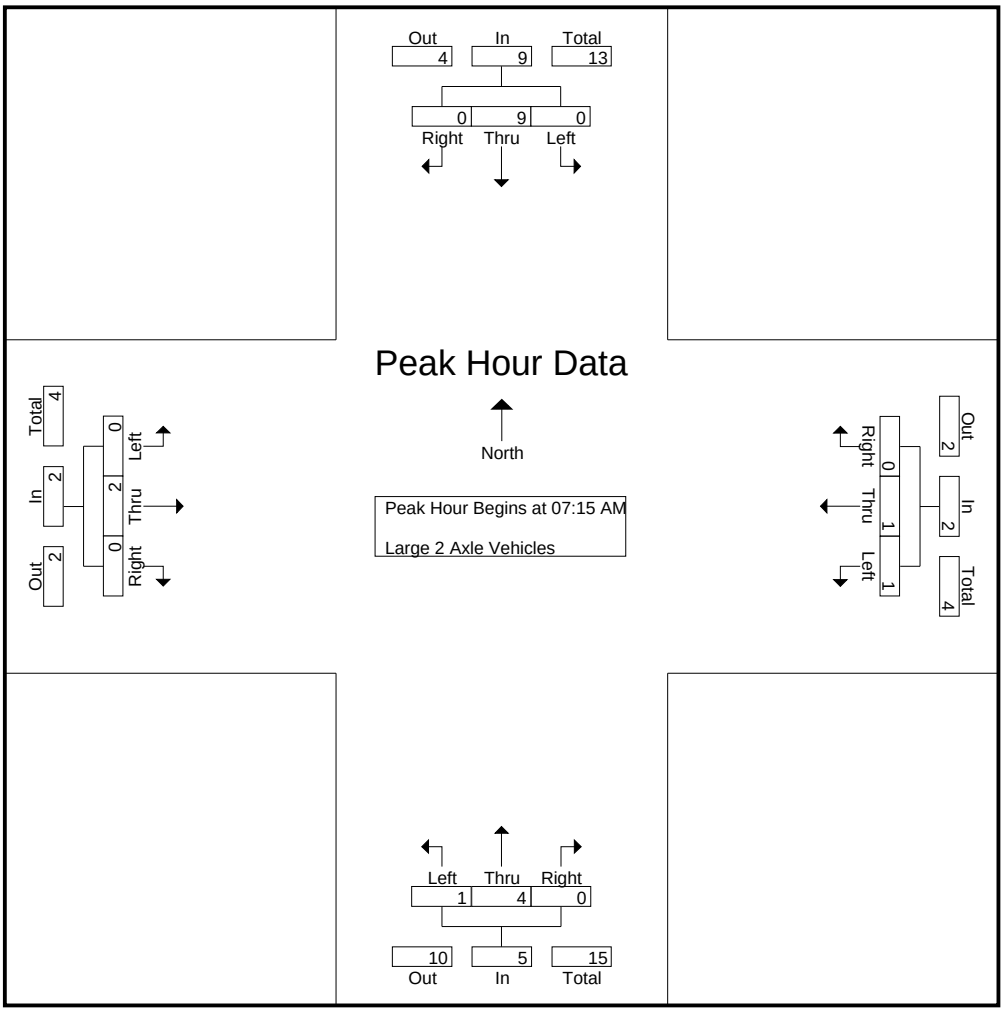

Peak Hour Analysis From 07:15 AM to 08:00 AM - Peak 1 of 1

Peak Hour for Each Approach Begins at:

	07:15 AM				07:15 AM				07:15 AM				07:15 AM			
+0 mins.	0	3	0	3	**1**	0	0	**1**	0	**3**	0	**3**	0	0	0	0
+15 mins.	0	**5**	0	**5**	0	0	0	0	**1**	0	0	1	0	**1**	0	**1**
+30 mins.	0	1	0	1	0	**1**	0	1	0	0	0	0	0	0	0	0
+45 mins.	0	0	0	0	0	0	0	0	0	1	0	1	0	1	0	1
Total Volume	0	9	0	9	1	1	0	2	1	4	0	5	0	2	0	2
% App. Total	0	100	0		50	50	0		20	80	0		0	100	0	
PHF	.000	.450	.000	.450	.250	.250	.000	.500	.250	.333	.000	.417	.000	.500	.000	.500

Counts Unlimited Inc.
PO Box 1178
Corona, CA 92878
(951) 268-6268

City of San Bernardino
N/S: E Street
E/W: 4th Street
Weather: Sunny

File Name : SBCE4AM
Site Code : 00000125
Start Date : 12/7/2011
Page No : 1

Groups Printed- 3 Axle Vehicles

	Southbound				Westbound				Northbound				Eastbound				
Start Time	Left	Thru	Right	App. Total	Left	Thru	Right	App. Total	Left	Thru	Right	App. Total	Left	Thru	Right	App. Total	Int. Total
07:00 AM	0	0	0	0	0	0	0	0	0	0	0	0	0	0	0	0	0
07:15 AM	0	0	0	0	0	0	0	0	0	0	0	0	0	0	0	0	0
07:30 AM	0	0	0	0	0	0	0	0	0	0	0	0	0	0	0	0	0
07:45 AM	0	0	0	0	0	0	0	0	0	0	0	0	0	0	0	0	0
Total	0	0	0	0	0	0	0	0	0	0	0	0	0	0	0	0	0
08:00 AM	0	0	0	0	0	0	0	0	0	0	0	0	0	0	0	0	0
08:15 AM	0	0	0	0	0	0	0	0	0	0	0	0	0	0	0	0	0
08:30 AM	0	0	0	0	0	0	0	0	0	0	0	0	0	0	0	0	0
08:45 AM	0	0	0	0	0	0	0	0	0	0	0	0	0	0	0	0	0
Total	0	0	0	0	0	0	0	0	0	0	0	0	0	0	0	0	0
Grand Total	0	0	0	0	0	0	0	0	0	0	0	0	0	0	0	0	0
Apprch %	0	0	0		0	0	0		0	0	0		0	0	0		
Total %																	

	Southbound				Westbound				Northbound				Eastbound				
Start Time	Left	Thru	Right	App. Total	Left	Thru	Right	App. Total	Left	Thru	Right	App. Total	Left	Thru	Right	App. Total	Int. Total
Peak Hour Analysis From 07:15 AM to 08:00 AM - Peak 1 of 1																	
Peak Hour for Entire Intersection Begins at 07:15 AM																	
07:15 AM	0	0	0	0	0	0	0	0	0	0	0	0	0	0	0	0	0
07:30 AM	0	0	0	0	0	0	0	0	0	0	0	0	0	0	0	0	0
07:45 AM	0	0	0	0	0	0	0	0	0	0	0	0	0	0	0	0	0
08:00 AM	0	0	0	0	0	0	0	0	0	0	0	0	0	0	0	0	0
Total Volume	0	0	0	0	0	0	0	0	0	0	0	0	0	0	0	0	0
% App. Total	0	0	0		0	0	0		0	0	0		0	0	0		
PHF	.000	.000	.000	.000	.000	.000	.000	.000	.000	.000	.000	.000	.000	.000	.000	.000	.000

Counts Unlimited Inc.
PO Box 1178
Corona, CA 92878
(951) 268-6268

City of San Bernardino
N/S: E Street
E/W: 4th Street
Weather: Sunny

File Name : SBCE4AM
Site Code : 00000125
Start Date : 12/7/2011
Page No : 2

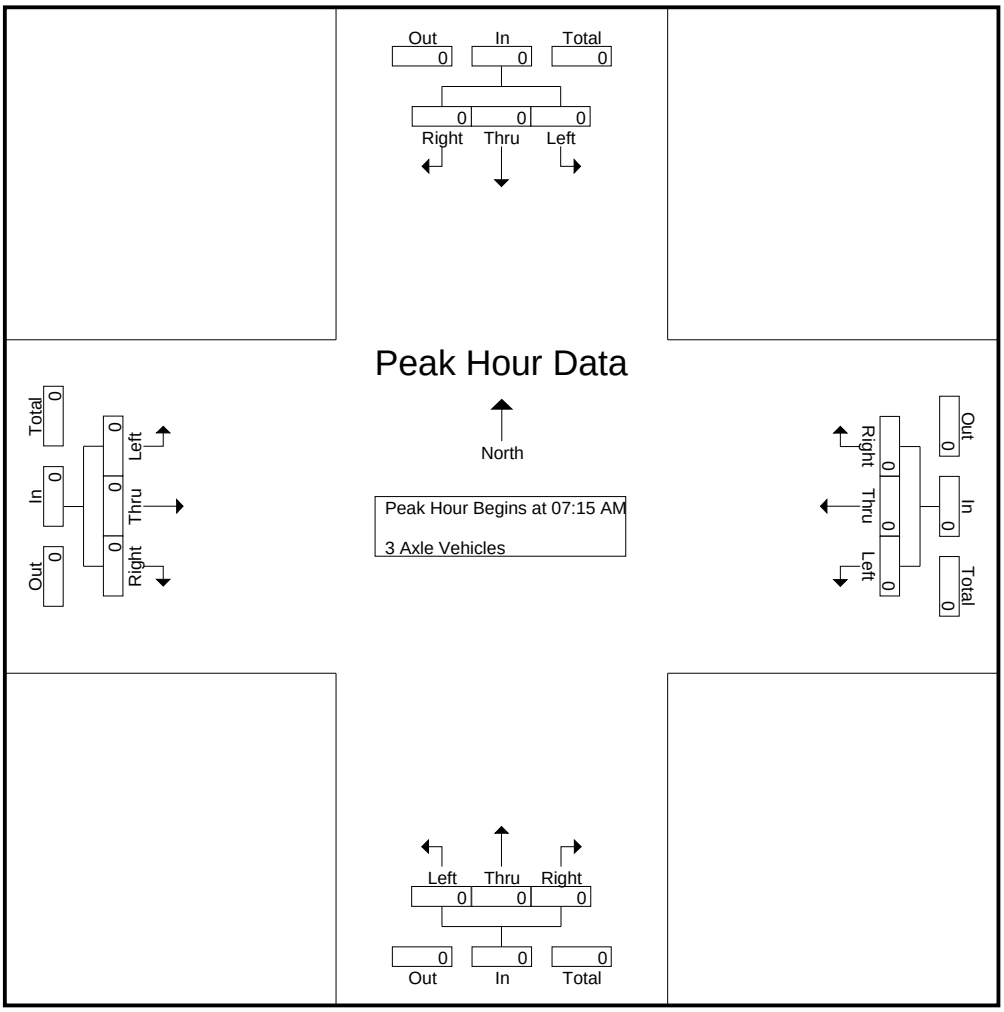

Peak Hour Analysis From 07:15 AM to 08:00 AM - Peak 1 of 1

Peak Hour for Each Approach Begins at:

	07:15 AM				07:15 AM				07:15 AM				07:15 AM			
+0 mins.	0	0	0	0	0	0	0	0	0	0	0	0	0	0	0	0
+15 mins.	0	0	0	0	0	0	0	0	0	0	0	0	0	0	0	0
+30 mins.	0	0	0	0	0	0	0	0	0	0	0	0	0	0	0	0
+45 mins.	0	0	0	0	0	0	0	0	0	0	0	0	0	0	0	0
Total Volume	0	0	0	0	0	0	0	0	0	0	0	0	0	0	0	0
% App. Total	0	0	0		0	0	0		0	0	0		0	0	0	
PHF	.000	.000	.000	.000	.000	.000	.000	.000	.000	.000	.000	.000	.000	.000	.000	.000

Counts Unlimited Inc.
PO Box 1178
Corona, CA 92878
(951) 268-6268

City of San Bernardino
N/S: E Street
E/W: 4th Street
Weather: Sunny

File Name : SBCE4AM
Site Code : 00000125
Start Date : 12/7/2011
Page No : 1

Groups Printed- 4+ Axle Trucks

	Southbound				Westbound				Northbound				Eastbound				
Start Time	Left	Thru	Right	App. Total	Left	Thru	Right	App. Total	Left	Thru	Right	App. Total	Left	Thru	Right	App. Total	Int. Total
07:00 AM	0	0	0	0	0	0	0	0	0	0	0	0	0	0	0	0	0
07:15 AM	0	1	0	1	0	0	0	0	0	0	0	0	0	0	0	0	1
07:30 AM	0	0	1	1	0	0	0	0	0	0	0	0	0	0	0	0	1
07:45 AM	0	0	0	0	0	0	0	0	0	0	0	0	0	0	0	0	0
Total	0	1	1	2	0	0	0	0	0	0	0	0	0	0	0	0	2
08:00 AM	0	0	0	0	0	0	0	0	0	0	0	0	0	0	0	0	0
08:15 AM	0	0	0	0	0	0	0	0	0	0	0	0	0	0	0	0	0
08:30 AM	0	0	0	0	0	0	0	0	0	0	0	0	0	0	0	0	0
08:45 AM	0	0	0	0	0	0	0	0	0	0	0	0	0	0	0	0	0
Total	0	0	0	0	0	0	0	0	0	0	0	0	0	0	0	0	0
Grand Total	0	1	1	2	0	0	0	0	0	0	0	0	0	0	0	0	2
Apprch %	0	50	50		0	0	0		0	0	0		0	0	0		
Total %	0	50	50	100	0	0	0	0	0	0	0	0	0	0	0	0	

	Southbound				Westbound				Northbound				Eastbound				
Start Time	Left	Thru	Right	App. Total	Left	Thru	Right	App. Total	Left	Thru	Right	App. Total	Left	Thru	Right	App. Total	Int. Total
Peak Hour Analysis From 07:15 AM to 08:00 AM - Peak 1 of 1																	
Peak Hour for Entire Intersection Begins at 07:15 AM																	
07:15 AM	0	**1**	0	**1**	0	0	0	0	0	0	0	0	0	0	0	0	**1**
07:30 AM	0	0	**1**	1	0	0	0	0	0	0	0	0	0	0	0	0	1
07:45 AM	0	0	0	0	0	0	0	0	0	0	0	0	0	0	0	0	0
08:00 AM	0	0	0	0	0	0	0	0	0	0	0	0	0	0	0	0	0
Total Volume	0	1	1	2	0	0	0	0	0	0	0	0	0	0	0	0	2
% App. Total	0	50	50		0	0	0		0	0	0		0	0	0		
PHF	.000	.250	.250	.500	.000	.000	.000	.000	.000	.000	.000	.000	.000	.000	.000	.000	.500

Counts Unlimited Inc.
PO Box 1178
Corona, CA 92878
(951) 268-6268

City of San Bernardino
N/S: E Street
E/W: 4th Street
Weather: Sunny

File Name : SBCE4AM
Site Code : 00000125
Start Date : 12/7/2011
Page No : 2

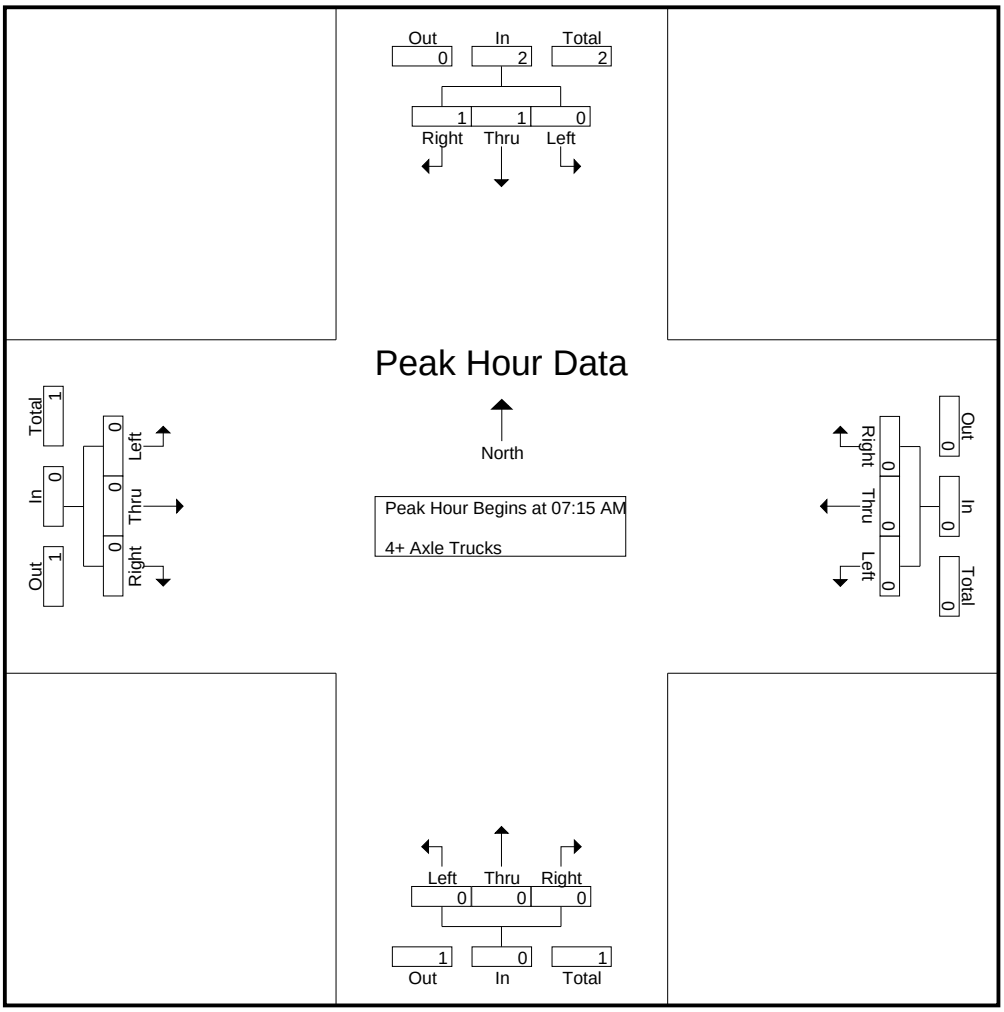

Peak Hour Analysis From 07:15 AM to 08:00 AM - Peak 1 of 1

Peak Hour for Each Approach Begins at:

	07:15 AM				07:15 AM				07:15 AM				07:15 AM			
+0 mins.	0	**1**	0	**1**	0	0	0	0	0	0	0	0	0	0	0	0
+15 mins.	0	0	**1**	1	0	0	0	0	0	0	0	0	0	0	0	0
+30 mins.	0	0	0	0	0	0	0	0	0	0	0	0	0	0	0	0
+45 mins.	0	0	0	0	0	0	0	0	0	0	0	0	0	0	0	0
Total Volume	0	1	1	2	0	0	0	0	0	0	0	0	0	0	0	0
% App. Total	0	50	50		0	0	0		0	0	0		0	0	0	
PHF	.000	.250	.250	.500	.000	.000	.000	.000	.000	.000	.000	.000	.000	.000	.000	.000

Counts Unlimited Inc.
PO Box 1178
Corona, CA 92878
(951) 268-6268

City of San Bernardino
N/S: E Street
E/W: 4th Street
Weather: Sunny

File Name : SBCE4PM
Site Code : 00000125
Start Date : 12/7/2011
Page No : 1

Groups Printed- Passenger Vehicles - Large 2 Axle Vehicles - 3 Axle Vehicles - 4+ Axle Trucks

	E Street Southbound				4th Street Westbound				E Street Northbound				4th Street Eastbound				
Start Time	Left	Thru	Right	App. Total	Left	Thru	Right	App. Total	Left	Thru	Right	App. Total	Left	Thru	Right	App. Total	Int. Total
04:00 PM	3	90	11	104	17	37	2	56	13	138	3	154	1	25	18	44	358
04:15 PM	3	89	8	100	7	25	2	34	10	111	8	129	2	13	15	30	293
04:30 PM	2	99	10	111	15	71	2	88	18	108	7	133	2	19	8	29	361
04:45 PM	2	83	7	92	10	39	7	56	17	115	6	138	3	16	6	25	311
Total	10	361	36	407	49	172	13	234	58	472	24	554	8	73	47	128	1323
05:00 PM	0	82	11	93	24	54	5	83	13	115	5	133	4	16	15	35	344
05:15 PM	1	62	3	66	6	23	3	32	14	120	0	134	4	10	10	24	256
05:30 PM	0	74	3	77	13	24	1	38	9	120	1	130	4	13	15	32	277
05:45 PM	1	60	7	68	2	14	2	18	9	114	3	126	6	9	6	21	233
Total	2	278	24	304	45	115	11	171	45	469	9	523	18	48	46	112	1110
Grand Total	12	639	60	711	94	287	24	405	103	941	33	1077	26	121	93	240	2433
Apprch %	1.7	89.9	8.4		23.2	70.9	5.9		9.6	87.4	3.1		10.8	50.4	38.8		
Total %	0.5	26.3	2.5	29.2	3.9	11.8	1	16.6	4.2	38.7	1.4	44.3	1.1	5	3.8	9.9	
Passenger Vehicles	11	625	59	695	93	285	24	402	102	930	33	1065	26	114	91	231	2393
% Passenger Vehicles	91.7	97.8	98.3	97.7	98.9	99.3	100	99.3	99	98.8	100	98.9	100	94.2	97.8	96.2	98.4
Large 2 Axle Vehicles	1	14	1	16	1	2	0	3	1	9	0	10	0	7	2	9	38
% Large 2 Axle Vehicles	8.3	2.2	1.7	2.3	1.1	0.7	0	0.7	1	1	0	0.9	0	5.8	2.2	3.8	1.6
3 Axle Vehicles	0	0	0	0	0	0	0	0	0	0	0	0	0	0	0	0	0
% 3 Axle Vehicles	0	0	0	0	0	0	0	0	0	0	0	0	0	0	0	0	0
4+ Axle Trucks	0	0	0	0	0	0	0	0	0	2	0	2	0	0	0	0	2
% 4+ Axle Trucks	0	0	0	0	0	0	0	0	0	0.2	0	0.2	0	0	0	0	0.1

	E Street Southbound				4th Street Westbound				E Street Northbound				4th Street Eastbound				
Start Time	Left	Thru	Right	App. Total	Left	Thru	Right	App. Total	Left	Thru	Right	App. Total	Left	Thru	Right	App. Total	Int. Total
Peak Hour Analysis From 04:00 PM to 04:45 PM - Peak 1 of 1																	
Peak Hour for Entire Intersection Begins at 04:00 PM																	
04:00 PM	**3**	90	**11**	104	**17**	37	2	56	13	**138**	3	**154**	1	**25**	**18**	**44**	358
04:15 PM	3	89	8	100	7	25	2	34	10	111	**8**	129	2	13	15	30	293
04:30 PM	2	**99**	10	**111**	15	**71**	2	**88**	**18**	108	7	133	2	19	8	29	**361**
04:45 PM	2	83	7	92	10	39	**7**	56	17	115	6	138	**3**	16	6	25	311
Total Volume	10	361	36	407	49	172	13	234	58	472	24	554	8	73	47	128	1323
% App. Total	2.5	88.7	8.8		20.9	73.5	5.6		10.5	85.2	4.3		6.2	57	36.7		
PHF	.833	.912	.818	.917	.721	.606	.464	.665	.806	.855	.750	.899	.667	.730	.653	.727	.916

Counts Unlimited Inc.
PO Box 1178
Corona, CA 92878
(951) 268-6268

City of San Bernardino
N/S: E Street
E/W: 4th Street
Weather: Sunny

File Name : SBCE4PM
Site Code : 00000125
Start Date : 12/7/2011
Page No : 2

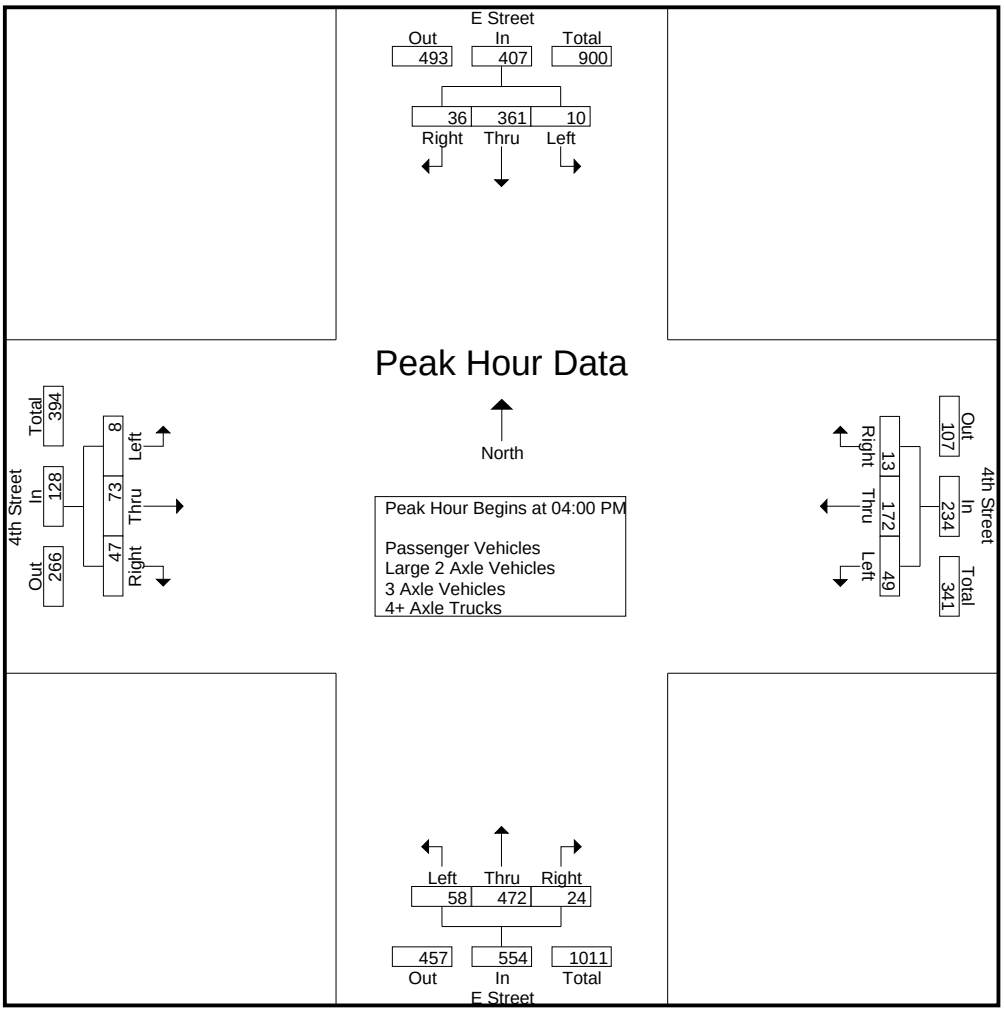

Peak Hour Analysis From 04:00 PM to 04:45 PM - Peak 1 of 1

Peak Hour for Each Approach Begins at:

	04:00 PM				04:00 PM				04:00 PM				04:00 PM			
+0 mins.	**3**	90	**11**	104	**17**	37	2	56	13	**138**	3	**154**	1	**25**	**18**	**44**
+15 mins.	3	89	8	100	7	25	2	34	10	111	**8**	129	2	13	15	30
+30 mins.	2	**99**	10	**111**	15	**71**	2	**88**	**18**	108	7	133	2	19	8	29
+45 mins.	2	83	7	92	10	39	**7**	56	17	115	6	138	**3**	16	6	25
Total Volume	10	361	36	407	49	172	13	234	58	472	24	554	8	73	47	128
% App. Total	2.5	88.7	8.8		20.9	73.5	5.6		10.5	85.2	4.3		6.2	57	36.7	
PHF	.833	.912	.818	.917	.721	.606	.464	.665	.806	.855	.750	.899	.667	.730	.653	.727

Counts Unlimited Inc.
PO Box 1178
Corona, CA 92878
(951) 268-6268

City of San Bernardino
N/S: E Street
E/W: 4th Street
Weather: Sunny

File Name : SBCE4PM
Site Code : 00000125
Start Date : 12/7/2011
Page No : 1

Groups Printed- Passenger Vehicles

	E Street Southbound				4th Street Westbound				E Street Northbound				4th Street Eastbound				
Start Time	Left	Thru	Right	App. Total	Left	Thru	Right	App. Total	Left	Thru	Right	App. Total	Left	Thru	Right	App. Total	Int. Total
04:00 PM	3	90	11	104	17	37	2	56	13	138	3	154	1	22	18	41	355
04:15 PM	3	84	8	95	7	25	2	34	10	111	8	129	2	13	13	28	286
04:30 PM	1	96	10	107	15	70	2	87	18	106	7	131	2	17	8	27	352
04:45 PM	2	81	7	90	10	39	7	56	16	112	6	134	3	16	6	25	305
Total	9	351	36	396	49	171	13	233	57	467	24	548	8	68	45	121	1298
05:00 PM	0	82	11	93	24	53	5	82	13	113	5	131	4	15	15	34	340
05:15 PM	1	60	2	63	6	23	3	32	14	120	0	134	4	10	10	24	253
05:30 PM	0	73	3	76	12	24	1	37	9	116	1	126	4	12	15	31	270
05:45 PM	1	59	7	67	2	14	2	18	9	114	3	126	6	9	6	21	232
Total	2	274	23	299	44	114	11	169	45	463	9	517	18	46	46	110	1095
Grand Total	11	625	59	695	93	285	24	402	102	930	33	1065	26	114	91	231	2393
Apprch %	1.6	89.9	8.5		23.1	70.9	6		9.6	87.3	3.1		11.3	49.4	39.4		
Total %	0.5	26.1	2.5	29	3.9	11.9	1	16.8	4.3	38.9	1.4	44.5	1.1	4.8	3.8	9.7	

	E Street Southbound				4th Street Westbound				E Street Northbound				4th Street Eastbound				
Start Time	Left	Thru	Right	App. Total	Left	Thru	Right	App. Total	Left	Thru	Right	App. Total	Left	Thru	Right	App. Total	Int. Total
Peak Hour Analysis From 04:00 PM to 04:45 PM - Peak 1 of 1																	
Peak Hour for Entire Intersection Begins at 04:00 PM																	
04:00 PM	**3**	90	**11**	104	**17**	37	2	56	13	**138**	3	**154**	1	**22**	**18**	**41**	**355**
04:15 PM	3	84	8	95	7	25	2	34	10	111	**8**	129	2	13	13	28	286
04:30 PM	1	**96**	10	**107**	15	**70**	2	**87**	**18**	106	7	131	2	17	8	27	352
04:45 PM	2	81	7	90	10	39	**7**	56	16	112	6	134	**3**	16	6	25	305
Total Volume	9	351	36	396	49	171	13	233	57	467	24	548	8	68	45	121	1298
% App. Total	2.3	88.6	9.1		21	73.4	5.6		10.4	85.2	4.4		6.6	56.2	37.2		
PHF	.750	.914	.818	.925	.721	.611	.464	.670	.792	.846	.750	.890	.667	.773	.625	.738	.914

Counts Unlimited Inc.
PO Box 1178
Corona, CA 92878
(951) 268-6268

City of San Bernardino
N/S: E Street
E/W: 4th Street
Weather: Sunny

File Name : SBCE4PM
Site Code : 00000125
Start Date : 12/7/2011
Page No : 2

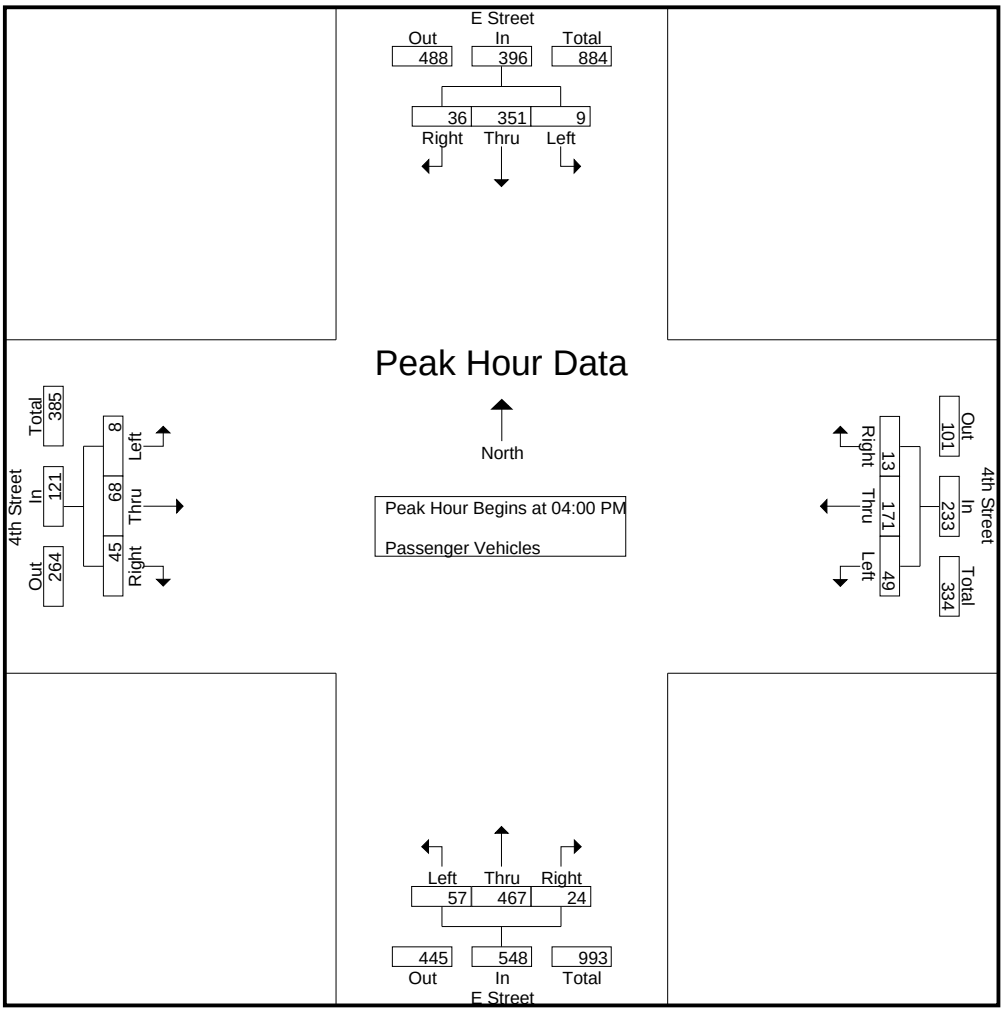

Peak Hour Analysis From 04:00 PM to 04:45 PM - Peak 1 of 1

Peak Hour for Each Approach Begins at:

	04:00 PM				04:00 PM				04:00 PM				04:00 PM			
+0 mins.	**3**	90	**11**	104	**17**	37	2	56	13	**138**	3	**154**	1	**22**	**18**	**41**
+15 mins.	3	84	8	95	7	25	2	34	10	111	**8**	129	2	13	13	28
+30 mins.	1	**96**	10	**107**	15	**70**	2	**87**	**18**	106	7	131	2	17	8	27
+45 mins.	2	81	7	90	10	39	**7**	56	16	112	6	134	**3**	16	6	25
Total Volume	9	351	36	396	49	171	13	233	57	467	24	548	8	68	45	121
% App. Total	2.3	88.6	9.1		21	73.4	5.6		10.4	85.2	4.4		6.6	56.2	37.2	
PHF	.750	.914	.818	.925	.721	.611	.464	.670	.792	.846	.750	.890	.667	.773	.625	.738

Counts Unlimited Inc.
PO Box 1178
Corona, CA 92878
(951) 268-6268

City of San Bernardino
N/S: E Street
E/W: 4th Street
Weather: Sunny

File Name : SBCE4PM
Site Code : 00000125
Start Date : 12/7/2011
Page No : 1

Groups Printed- Large 2 Axle Vehicles

	E Street Southbound				4th Street Westbound				E Street Northbound				4th Street Eastbound				
Start Time	Left	Thru	Right	App. Total	Left	Thru	Right	App. Total	Left	Thru	Right	App. Total	Left	Thru	Right	App. Total	Int. Total
04:00 PM	0	0	0	0	0	0	0	0	0	0	0	0	0	3	0	3	3
04:15 PM	0	5	0	5	0	0	0	0	0	0	0	0	0	0	2	2	7
04:30 PM	1	3	0	4	0	1	0	1	0	2	0	2	0	2	0	2	9
04:45 PM	0	2	0	2	0	0	0	0	1	2	0	3	0	0	0	0	5
Total	1	10	0	11	0	1	0	1	1	4	0	5	0	5	2	7	24
05:00 PM	0	0	0	0	0	1	0	1	0	2	0	2	0	1	0	1	4
05:15 PM	0	2	1	3	0	0	0	0	0	0	0	0	0	0	0	0	3
05:30 PM	0	1	0	1	1	0	0	1	0	3	0	3	0	1	0	1	6
05:45 PM	0	1	0	1	0	0	0	0	0	0	0	0	0	0	0	0	1
Total	0	4	1	5	1	1	0	2	0	5	0	5	0	2	0	2	14
Grand Total	1	14	1	16	1	2	0	3	1	9	0	10	0	7	2	9	38
Apprch %	6.2	87.5	6.2		33.3	66.7	0		10	90	0		0	77.8	22.2		
Total %	2.6	36.8	2.6	42.1	2.6	5.3	0	7.9	2.6	23.7	0	26.3	0	18.4	5.3	23.7	

	E Street Southbound				4th Street Westbound				E Street Northbound				4th Street Eastbound				
Start Time	Left	Thru	Right	App. Total	Left	Thru	Right	App. Total	Left	Thru	Right	App. Total	Left	Thru	Right	App. Total	Int. Total
Peak Hour Analysis From 04:00 PM to 04:45 PM - Peak 1 of 1																	
Peak Hour for Entire Intersection Begins at 04:00 PM																	
04:00 PM	0	0	0	0	0	0	0	0	0	0	0	0	0	**3**	0	**3**	3
04:15 PM	0	**5**	0	**5**	0	0	0	0	0	0	0	0	0	0	**2**	2	7
04:30 PM	**1**	3	0	4	0	**1**	0	**1**	0	**2**	0	2	0	2	0	2	**9**
04:45 PM	0	2	0	2	0	0	0	0	**1**	2	0	**3**	0	0	0	0	5
Total Volume	1	10	0	11	0	1	0	1	1	4	0	5	0	5	2	7	24
% App. Total	9.1	90.9	0		0	100	0		20	80	0		0	71.4	28.6		
PHF	.250	.500	.000	.550	.000	.250	.000	.250	.250	.500	.000	.417	.000	.417	.250	.583	.667

Counts Unlimited Inc.
PO Box 1178
Corona, CA 92878
(951) 268-6268

City of San Bernardino
N/S: E Street
E/W: 4th Street
Weather: Sunny

File Name : SBCE4PM
Site Code : 00000125
Start Date : 12/7/2011
Page No : 2

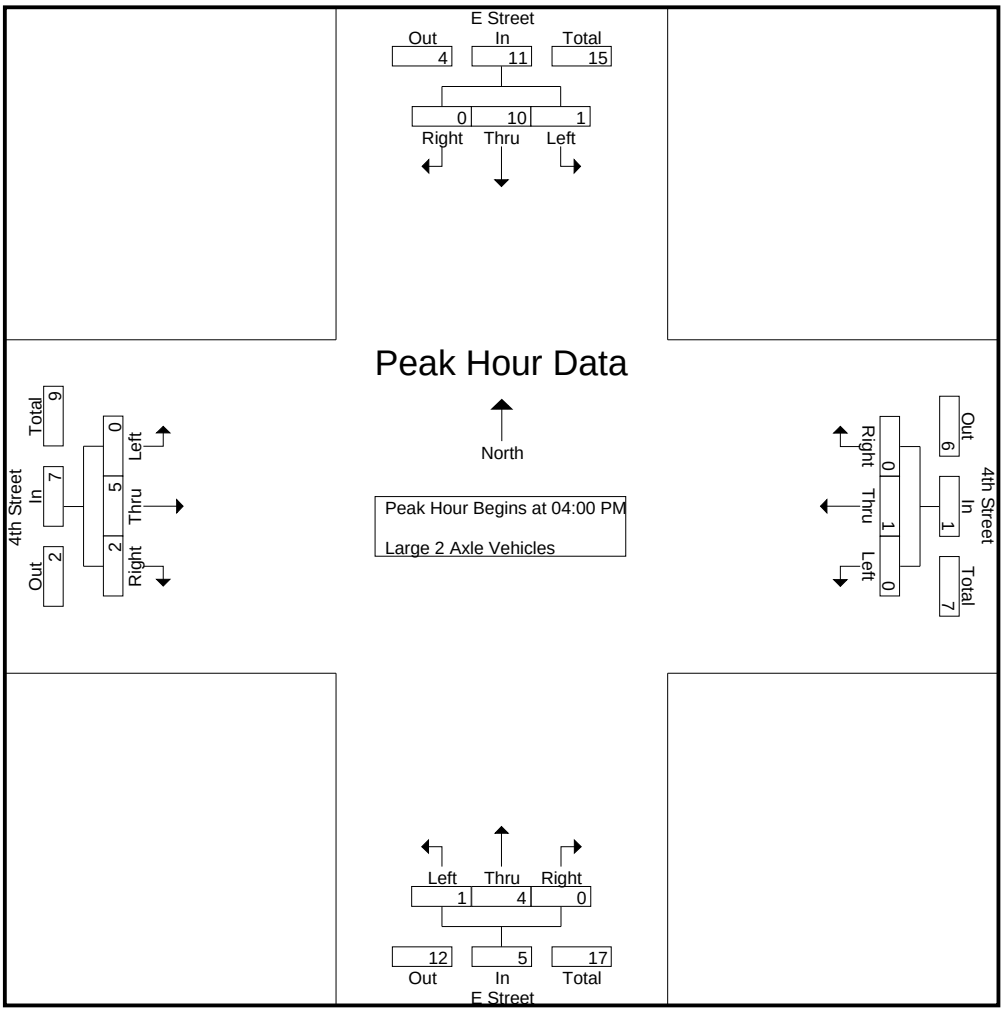

Peak Hour Analysis From 04:00 PM to 04:45 PM - Peak 1 of 1

Peak Hour for Each Approach Begins at:

	04:00 PM				04:00 PM				04:00 PM				04:00 PM			
+0 mins.	0	0	0	0	0	0	0	0	0	0	0	0	0	**3**	0	**3**
+15 mins.	0	**5**	0	**5**	0	0	0	0	0	0	0	0	0	0	**2**	2
+30 mins.	**1**	3	0	4	0	**1**	0	**1**	0	**2**	0	2	0	2	0	2
+45 mins.	0	2	0	2	0	0	0	0	**1**	2	0	**3**	0	0	0	0
Total Volume	1	10	0	11	0	1	0	1	1	4	0	5	0	5	2	7
% App. Total	9.1	90.9	0		0	100	0		20	80	0		0	71.4	28.6	
PHF	.250	.500	.000	.550	.000	.250	.000	.250	.250	.500	.000	.417	.000	.417	.250	.583

Counts Unlimited Inc.
PO Box 1178
Corona, CA 92878
(951) 268-6268

City of San Bernardino
N/S: E Street
E/W: 4th Street
Weather: Sunny

File Name : SBCE4PM
Site Code : 00000125
Start Date : 12/7/2011
Page No : 1

Groups Printed- 3 Axle Vehicles

	E Street Southbound				4th Street Westbound				E Street Northbound				4th Street Eastbound				
Start Time	Left	Thru	Right	App. Total	Left	Thru	Right	App. Total	Left	Thru	Right	App. Total	Left	Thru	Right	App. Total	Int. Total
04:00 PM	0	0	0	0	0	0	0	0	0	0	0	0	0	0	0	0	0
04:15 PM	0	0	0	0	0	0	0	0	0	0	0	0	0	0	0	0	0
04:30 PM	0	0	0	0	0	0	0	0	0	0	0	0	0	0	0	0	0
04:45 PM	0	0	0	0	0	0	0	0	0	0	0	0	0	0	0	0	0
Total	0	0	0	0	0	0	0	0	0	0	0	0	0	0	0	0	0
05:00 PM	0	0	0	0	0	0	0	0	0	0	0	0	0	0	0	0	0
05:15 PM	0	0	0	0	0	0	0	0	0	0	0	0	0	0	0	0	0
05:30 PM	0	0	0	0	0	0	0	0	0	0	0	0	0	0	0	0	0
05:45 PM	0	0	0	0	0	0	0	0	0	0	0	0	0	0	0	0	0
Total	0	0	0	0	0	0	0	0	0	0	0	0	0	0	0	0	0
Grand Total	0	0	0	0	0	0	0	0	0	0	0	0	0	0	0	0	0
Apprch %	0	0	0		0	0	0		0	0	0		0	0	0		
Total %																	

	E Street Southbound				4th Street Westbound				E Street Northbound				4th Street Eastbound				
Start Time	Left	Thru	Right	App. Total	Left	Thru	Right	App. Total	Left	Thru	Right	App. Total	Left	Thru	Right	App. Total	Int. Total
Peak Hour Analysis From 04:00 PM to 04:45 PM - Peak 1 of 1																	
Peak Hour for Entire Intersection Begins at 04:00 PM																	
04:00 PM	0	0	0	0	0	0	0	0	0	0	0	0	0	0	0	0	0
04:15 PM	0	0	0	0	0	0	0	0	0	0	0	0	0	0	0	0	0
04:30 PM	0	0	0	0	0	0	0	0	0	0	0	0	0	0	0	0	0
04:45 PM	0	0	0	0	0	0	0	0	0	0	0	0	0	0	0	0	0
Total Volume	0	0	0	0	0	0	0	0	0	0	0	0	0	0	0	0	0
% App. Total	0	0	0		0	0	0		0	0	0		0	0	0		
PHF	.000	.000	.000	.000	.000	.000	.000	.000	.000	.000	.000	.000	.000	.000	.000	.000	.000

Counts Unlimited Inc.
PO Box 1178
Corona, CA 92878
(951) 268-6268

City of San Bernardino
N/S: E Street
E/W: 4th Street
Weather: Sunny

File Name : SBCE4PM
Site Code : 00000125
Start Date : 12/7/2011
Page No : 2

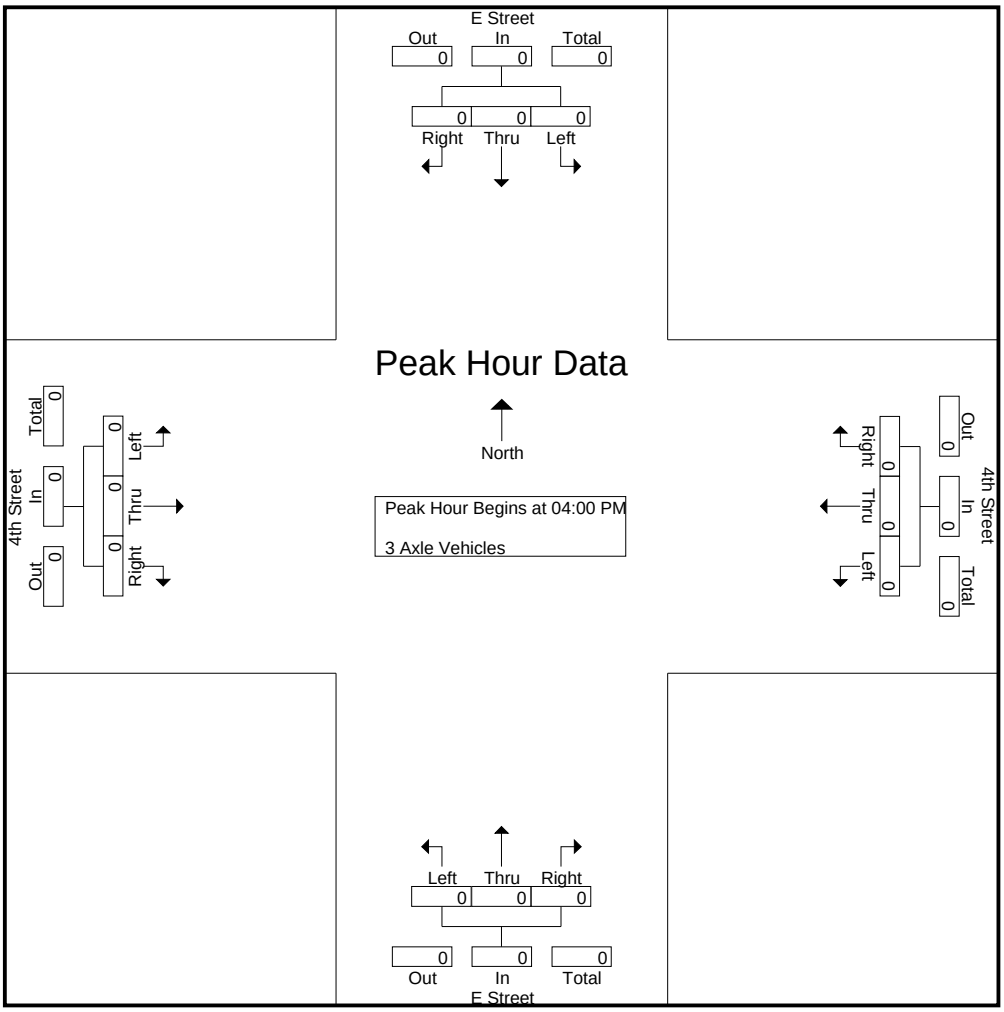

Peak Hour Analysis From 04:00 PM to 04:45 PM - Peak 1 of 1

Peak Hour for Each Approach Begins at:

	04:00 PM				04:00 PM				04:00 PM				04:00 PM			
+0 mins.	0	0	0	0	0	0	0	0	0	0	0	0	0	0	0	0
+15 mins.	0	0	0	0	0	0	0	0	0	0	0	0	0	0	0	0
+30 mins.	0	0	0	0	0	0	0	0	0	0	0	0	0	0	0	0
+45 mins.	0	0	0	0	0	0	0	0	0	0	0	0	0	0	0	0
Total Volume	0	0	0	0	0	0	0	0	0	0	0	0	0	0	0	0
% App. Total	0	0	0		0	0	0		0	0	0		0	0	0	
PHF	.000	.000	.000	.000	.000	.000	.000	.000	.000	.000	.000	.000	.000	.000	.000	.000

Counts Unlimited Inc.
PO Box 1178
Corona, CA 92878
(951) 268-6268

City of San Bernardino
N/S: E Street
E/W: 4th Street
Weather: Sunny

File Name : SBCE4PM
Site Code : 00000125
Start Date : 12/7/2011
Page No : 1

Groups Printed- 4+ Axle Trucks

	E Street Southbound				4th Street Westbound				E Street Northbound				4th Street Eastbound				
Start Time	Left	Thru	Right	App. Total	Left	Thru	Right	App. Total	Left	Thru	Right	App. Total	Left	Thru	Right	App. Total	Int. Total
04:00 PM	0	0	0	0	0	0	0	0	0	0	0	0	0	0	0	0	0
04:15 PM	0	0	0	0	0	0	0	0	0	0	0	0	0	0	0	0	0
04:30 PM	0	0	0	0	0	0	0	0	0	0	0	0	0	0	0	0	0
04:45 PM	0	0	0	0	0	0	0	0	0	1	0	1	0	0	0	0	1
Total	0	0	0	0	0	0	0	0	0	1	0	1	0	0	0	0	1
05:00 PM	0	0	0	0	0	0	0	0	0	0	0	0	0	0	0	0	0
05:15 PM	0	0	0	0	0	0	0	0	0	0	0	0	0	0	0	0	0
05:30 PM	0	0	0	0	0	0	0	0	0	1	0	1	0	0	0	0	1
05:45 PM	0	0	0	0	0	0	0	0	0	0	0	0	0	0	0	0	0
Total	0	0	0	0	0	0	0	0	0	1	0	1	0	0	0	0	1
Grand Total	0	0	0	0	0	0	0	0	0	2	0	2	0	0	0	0	2
Apprch %	0	0	0		0	0	0		0	100	0		0	0	0		
Total %	0	0	0	0	0	0	0	0	0	100	0	100	0	0	0	0	

	E Street Southbound				4th Street Westbound				E Street Northbound				4th Street Eastbound				
Start Time	Left	Thru	Right	App. Total	Left	Thru	Right	App. Total	Left	Thru	Right	App. Total	Left	Thru	Right	App. Total	Int. Total
Peak Hour Analysis From 04:00 PM to 04:45 PM - Peak 1 of 1																	
Peak Hour for Entire Intersection Begins at 04:00 PM																	
04:00 PM	0	0	0	0	0	0	0	0	0	0	0	0	0	0	0	0	0
04:15 PM	0	0	0	0	0	0	0	0	0	0	0	0	0	0	0	0	0
04:30 PM	0	0	0	0	0	0	0	0	0	0	0	0	0	0	0	0	0
04:45 PM	0	0	0	0	0	0	0	0	0	**1**	0	**1**	0	0	0	0	**1**
Total Volume	0	0	0	0	0	0	0	0	0	1	0	1	0	0	0	0	1
% App. Total	0	0	0		0	0	0		0	100	0		0	0	0		
PHF	.000	.000	.000	.000	.000	.000	.000	.000	.000	.250	.000	.250	.000	.000	.000	.000	.250

Counts Unlimited Inc.
PO Box 1178
Corona, CA 92878
(951) 268-6268

City of San Bernardino
N/S: E Street
E/W: 4th Street
Weather: Sunny

File Name : SBCE4PM
Site Code : 00000125
Start Date : 12/7/2011
Page No : 2

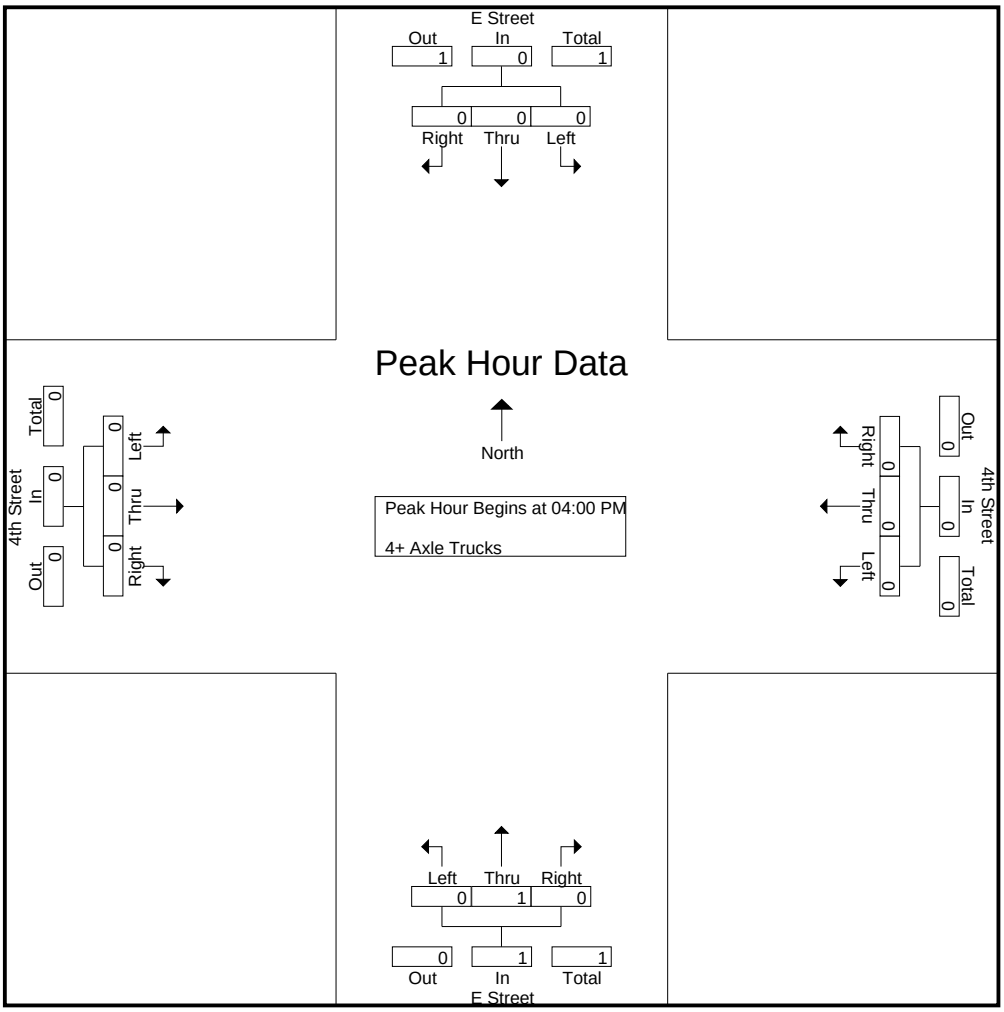

Peak Hour Analysis From 04:00 PM to 04:45 PM - Peak 1 of 1

Peak Hour for Each Approach Begins at:

	04:00 PM				04:00 PM				04:00 PM				04:00 PM			
+0 mins.	0	0	0	0	0	0	0	0	0	0	0	0	0	0	0	0
+15 mins.	0	0	0	0	0	0	0	0	0	0	0	0	0	0	0	0
+30 mins.	0	0	0	0	0	0	0	0	0	0	0	0	0	0	0	0
+45 mins.	0	0	0	0	0	0	0	0	0	**1**	0	**1**	0	0	0	0
Total Volume	0	0	0	0	0	0	0	0	0	1	0	1	0	0	0	0
% App. Total	0	0	0		0	0	0		0	100	0		0	0	0	
PHF	.000	.000	.000	.000	.000	.000	.000	.000	.000	.250	.000	.250	.000	.000	.000	.000

Counts Unlimited Inc.
PO Box 1178
Corona, CA 92878
(951) 268-6268

City of San Bernardino
N/S: "E" Street
E/W: Mill Street/Inland Center Drive
Weather: Sunny

File Name : SBCEMIICAM
Site Code : 11041066
Start Date : 2/24/2011
Page No : 1

Groups Printed- Total Volume

	"E" Street Southbound					Mill Street Westbound					"E" Street Northbound					Mill Street Eastbound					Inland Center Drive Northeastbound					
Start Time	Left	Thru	Bear Right	Right	App. Total	Left	Bear Left	Thru	Right	App. Total	Hard Left	Left	Thru	Right	App. Total	Left	Thru	Right	Hard Right	App. Total	Hard Left	Bear Left	Bear Right	Hard Right	App. Total	Int. Total
07:00 AM	3	15	4	6	28	5	18	34	3	60	1	4	19	7	31	9	67	3	0	79	0	10	36	1	47	245
07:15 AM	2	25	2	4	33	4	20	40	1	65	0	1	32	10	43	9	70	8	0	87	0	25	44	6	75	303
07:30 AM	9	46	7	7	69	9	32	64	4	109	3	3	40	8	54	6	73	12	0	91	1	22	53	8	84	407
07:45 AM	6	55	8	10	79	11	33	84	0	128	4	9	41	16	70	18	92	14	1	125	0	39	78	11	128	530
Total	20	141	21	27	209	29	103	222	8	362	8	17	132	41	198	42	302	37	1	382	1	96	211	26	334	1485
08:00 AM																										
08:15 AM	6	27	8	11	52	11	21	44	6	82	5	16	42	16	79	17	73	20	0	110	1	17	31	3	52	375
08:30 AM	7	30	10	9	56	18	35	71	9	133	6	12	46	10	74	12	67	7	0	86	1	22	28	11	62	411
08:45 AM	2	38	8	9	57	16	30	80	2	128	4	8	28	18	58	18	88	25	1	132	3	27	38	9	77	452
Total	20	134	33	37	224	56	116	263	21	456	21	45	144	52	262	62	323	71	2	458	7	91	133	34	265	1665
Grand Total		275	54	64	433	85	219	485	29	818	29	62	276	93	460	104	625	108	3	840	8	187	344	60	599	3150
Apprch %		63.5	12.5	14.8		10.4	26.8	59.3				13.5		20.2		12.4	74.4	12.9				31.2	57.4			
								15.4									19.8						10.9			

	"E" Street Southbound					Mill Street Westbound					"E" Street Northbound					Mill Street Eastbound					Inland Center Drive Northeastbound					
Start Time	Left	Thru	Bear Right	Right	App. Total	Left	Bear Left	Thru	Right	App. Total	Hard Left	Left	Thru	Right	App. Total	Left	Thru	Right	Hard Right	App. Total	Hard Left	Bear Left	Bear Right	Hard Right	App. Total	Int. Total
Peak Hour Analysis From 07:00 AM to 08:45 AM - Peak 1 of 1																										
Peak Hour for Entire Intersection Begins at 07:45 AM																										
07:45 AM	6	**55**	8	10	**79**	11	33	**84**	0	128	4	9	41	**16**	70	**18**	92	14	**1**	125	0	**39**	**78**	**11**	**128**	**530**
08:00 AM	5	39	7	8	59	11	30	68	4	113	**6**	9	28	8	51	15	**95**	19	1	**130**	**2**	25	36	11	74	427
08:15 AM	6	27	8	**11**	52	11	21	44	6	82	5	**16**	42	16	**79**	17	73	**20**	0	110	1	17	31	3	52	375
08:30 AM	**7**	30	**10**	9	56	**18**	**35**	71	**9**	**133**	6	12	**46**	10	74	12	67	7	0	86	1	22	28	11	62	411
Total Volume	24	151	33	38	246	51	119	267	19	456	21	46	157	50	274	62	327	60	2	451	4	103	173	36	316	1743
% App. Total	9.8	61.4	13.4	15.4		11.2	26.1	58.6	4.2		7.7	16.8	57.3	18.2		13.7	72.5	13.3	0.4		1.3	32.6	54.7	11.4		
PHF	.857	.686	.825	.864	.778	.708	.850	.795	.528	.857	.875	.719	.853	.781	.867	.861	.861	.750	.500	.867	.500	.660	.554	.818	.617	.822

Counts Unlimited Inc.
PO Box 1178
Corona, CA 92878
(951) 268-6268

City of San Bernardino
N/S: "E" Street
E/W: Mill Street/Inland Center Drive
Weather: Sunny

File Name : SBCEMIICAM
Site Code : 11041066
Start Date : 2/24/2011
Page No : 2

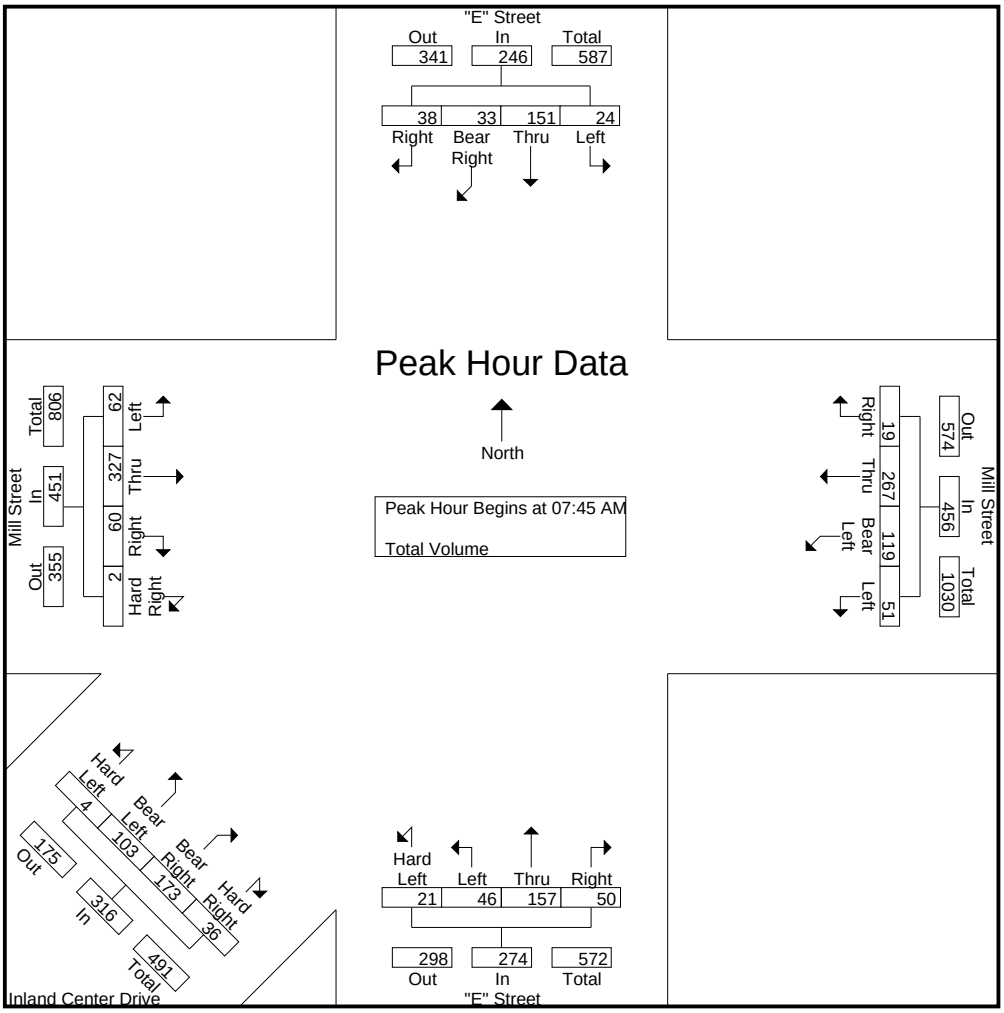

Peak Hour Analysis From 07:00 AM to 08:45 AM - Peak 1 of 1

Peak Hour for Each Approach Begins at:

	07:30 AM					07:45 AM					07:45 AM					08:00 AM					07:15 AM				
+0 mins.	9	46	7	7	69	11	33	84	0	128	4	9	41	16	70	15	95	19	**1**	130	0	25	44	6	75
+15 mins.	6	**55**	**8**	10	**79**	11	30	68	4	113	**6**	9	28	8	51	17	73	20	0	110	1	22	53	8	84
+30 mins.	5	39	7	8	59	11	21	44	6	82	5	**16**	42	16	**79**	12	67	7	0	86	0	**39**	**78**	**11**	**128**
+45 mins.	6	27	8	**11**	52	**18**	**35**	71	**9**	**133**	6	12	**46**	10	74	**18**	88	**25**	1	**132**	**2**	25	36	11	74
Total Volume	26	167	30	36	259	51	119	267	19	456	21	46	157	50	274	62	323	71	2	458	3	111	211	36	361
% App. Total	10	64.5	11.6	13.9		11.2	26.1	58.6	4.2		7.7	16.8	57.3	18.2		13.5	70.5	15.5	0.4		0.8	30.7	58.4		
PHF	.722	.759	.938	.818	.820	.708	.850	.795	.528	.857	.875	.719	.853	.781	.867	.861	.850	.710	.500	.867	.375	.712	.676	.818	.705

Counts Unlimited Inc.
PO Box 1178
Corona, CA 92878
(951) 268-6268

City of San Bernardino
N/S: "E" Street
E/W: Mill Street/Inland Center Drive
Weather: Sunny

File Name : SBCEMIICPM
Site Code : 11045066
Start Date : 2/24/2011
Page No : 1

Groups Printed- Total Volume

	"E" Street Southbound					Mill Street Westbound					"E" Street Northbound					Mill Street Eastbound					Inland Center Drive Northeastbound					
Start Time	Left	Thru	Bear Right	Right	App. Total	Left	Bear Left	Thru	Right	App. Total	Hard Left	Left	Thru	Right	App. Total	Left	Thru	Right	Hard Right	App. Total	Hard Left	Bear Left	Bear Right	Hard Right	App. Total	Int. Total
04:00 PM	12	86	25	20	143	19	49	108	9	185	6	22	98	21	147	14	85	18	4	121	3	24	43	8	78	674
04:15 PM	5	85	22	19	131	26	45	81	10	162	13	33	119	25	190	24	68	19	1	112	10	27	44	11	92	687
04:30 PM	5	83	15	16	119	12	50	105	5	172	9	37	129	24	199	17	78	17	1	113	2	39	42	11	94	697
04:45 PM	7	92	22	11	132	14	63	108	6	191	5	39	95	21	160	23	66	10	1	100	2	35	39	14	90	673
Total	29	346	84	66	525	71	207	402	30	710	33	131	441	91	696	78	297	64	7	446	17	125	168	44	354	2731
05:00 PM	7	87	35	27	156	30	68	102	9	209	7	35	116	31	189	32	80	17	0	129	5	35	42	9	91	774
05:15 PM	6	70	33	20	129	17	51	99	6	173	14	33	134	22	203	24	75	29	3	131	5	29	48	9	91	727
05:30 PM	6	76	22	14	118	19	52	109	3	183	10	41	99	23	173	23	70	14	1	108	3	34	38	11	86	668
05:45 PM	6	59	17	21	103	18	36	62	13	129	5	30	82	28	145	18	67	19	1	105	3	34	25	14	76	558
Total	25	292	107	82	506	84	207	372	31	694	36	139	431	104	710	97	292	79	5	473	16	132	153	43	344	2727
Grand Total		638	191	148	1031	155	414	774	61	1404	69	270	872	195	1406	175	589	143	12	919	33	257	321	87	698	5458
Apprch %		61.9	18.5	14.4			29.5	55.1				19.2		13.9			64.1	15.6				36.8		12.5		
		11.7						14.2									10.8									

	"E" Street Southbound					Mill Street Westbound					"E" Street Northbound					Mill Street Eastbound					Inland Center Drive Northeastbound					
Start Time	Left	Thru	Bear Right	Right	App. Total	Left	Bear Left	Thru	Right	App. Total	Hard Left	Left	Thru	Right	App. Total	Left	Thru	Right	Hard Right	App. Total	Hard Left	Bear Left	Bear Right	Hard Right	App. Total	Int. Total
Peak Hour Analysis From 04:00 PM to 05:45 PM - Peak 1 of 1																										
Peak Hour for Entire Intersection Begins at 04:30 PM																										
04:30 PM	5	83	15	16	119	12	50	105	5	172	9	37	129	24	199	17	78	17	1	113	2	**39**	42	11	**94**	697
04:45 PM	**7**	**92**	22	11	132	14	63	**108**	**6**	**191**	**5**	**39**	95	21	160	23	66	10	1	100	2	35	39	**14**	90	673
05:00 PM	7	87	**35**	**27**	**156**	**30**	**68**	102	**9**	**209**	7	35	116	**31**	189	**32**	**80**	17	0	129	**5**	35	42	9	91	**774**
05:15 PM	6	70	33	20	129	17	51	99	6	173	**14**	33	**134**	**22**	**203**	24	75	**29**	**3**	**131**	5	29	**48**	9	91	727
Total Volume	25	332	105	74	536	73	232	414	26	745	35	144	474	98	751	96	299	73	5	473	14	138	171	43	366	2871
% App. Total	4.7	61.9	19.6	13.8		9.8	31.1	55.6	3.5		4.7	19.2	63.1			20.3	63.2	15.4	1.1		3.8	37.7	46.7	11.7		
PHF	.893	.902	.750	.685	.859	.608	.853	.958	.722	.891	.625	.923	.884	.790	.925	.750	.934	.629	.417	.903	.700	.885	.891	.768	.973	.927

Counts Unlimited Inc.
PO Box 1178
Corona, CA 92878
(951) 268-6268

City of San Bernardino
N/S: "E" Street
E/W: Mill Street/Inland Center Drive
Weather: Sunny

File Name : SBCEMIICPM
Site Code : 11045066
Start Date : 2/24/2011
Page No : 2

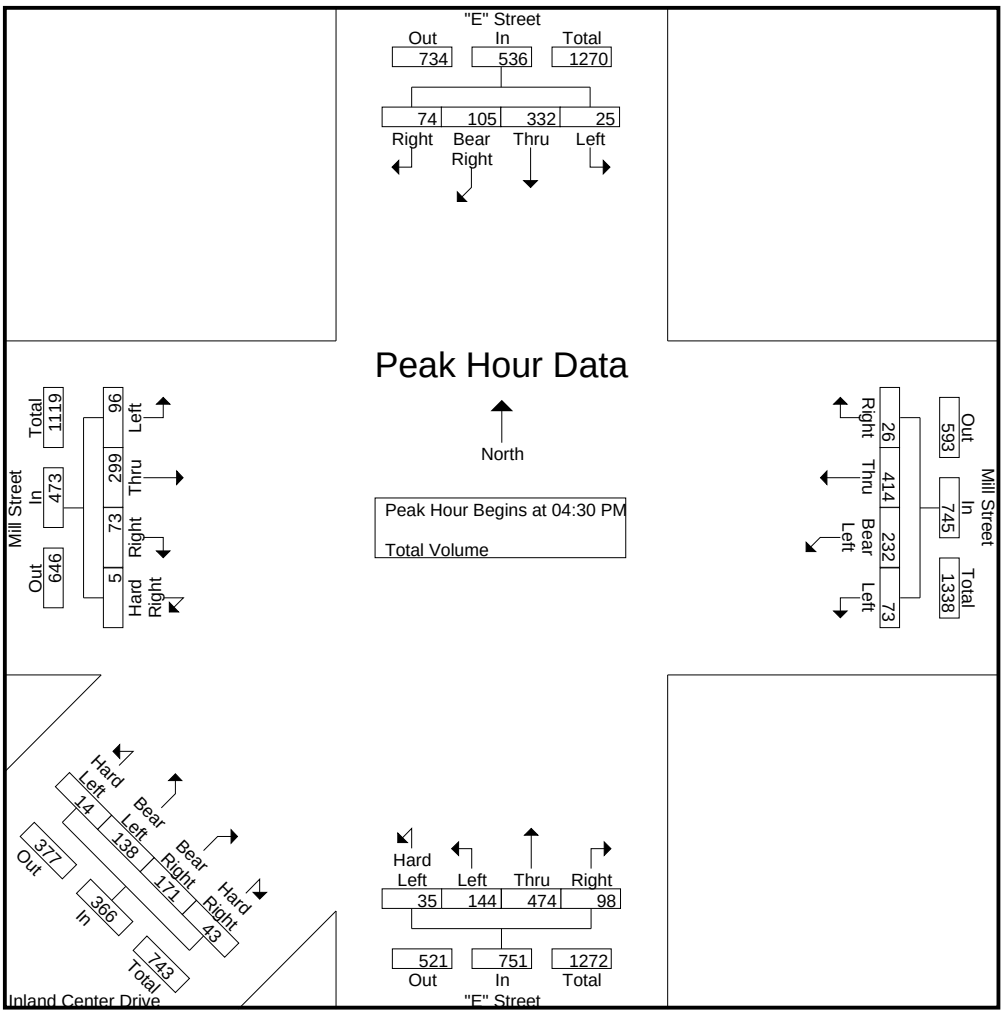

Peak Hour Analysis From 04:00 PM to 05:45 PM - Peak 1 of 1

Peak Hour for Each Approach Begins at:

	04:15 PM					04:45 PM					04:30 PM					04:30 PM					04:15 PM				
+0 mins.	5	85	22	19	131	14	63	108	6	191	9	37	129	24	199	17	78	17	1	113	**10**	27	**44**	11	92
+15 mins.	5	83	15	16	119	**30**	**68**	102	**9**	**209**	5	**39**	95	21	160	23	66	10	1	100	2	**39**	42	11	**94**
+30 mins.	**7**	**92**	22	11	132	17	51	99	6	173	7	35	116	**31**	189	**32**	**80**	17	0	129	2	35	39	**14**	90
+45 mins.	7	87	**35**	**27**	**156**	19	52	**109**	**3**	**183**	**14**	33	**134**	**22**	**203**	24	75	**29**	**3**	**131**	5	35	42	9	91
Total Volume	24	347	94	73	538	80	234	418	24	756	35	144	474	98	751	96	299	73	5	473	19	136	167	45	367
% App. Total	4.5	64.5	17.5	13.6		10.6		55.3	3.2		4.7	19.2	63.1			20.3	63.2	15.4	1.1		5.2	37.1	45.5	12.3	
PHF	.857	.943	.671	.676	.862	.667	.860	.959	.667	.904	.625	.923	.884	.790	.925	.750	.934	.629	.417	.903	.475	.872	.949	.804	.976

APPENDIX B: VOLUME DEVELOPMENT WORKSHEETS

EXISTING VOLUMES

INTERSECTION	AM 2009/2010/2011 VEHICLE TURNING MOVEMENT COUNTS											
	NORTHBOUND			EASTBOUND			SOUTHBOUND			WESTBOUND		
	L	T	R	L	T	R	L	T	R	L	T	R
1. K St and 3rd St	7	8	13	1	47	1	4	0	0	29	66	1
2. K St and 2nd St	15	3	38	7	240	12	7	23	11	36	119	20
3. K St and Rialto Ave	35	20	119	11	407	34	3	29	22	111	183	1
4. J St and 3rd St	4	0	5	0	64	0	0	0	0	4	104	0
5. J St and 2nd St	2	5	53	2	382	5	3	1	0	8	183	8
6. J St and Rialto Ave	0	6	2	46	481	2	4	4	4	30	238	7
7. I St and 3rd St	10	3	31	0	46	4	157	387	57	35	42	0
8. I St and 2nd St	4	16	125	5	305	4	111	272	17	36	158	12
9. I St and Rialto Ave	8	63	64	83	417	19	120	121	95	39	206	16
10. I-215 SB Off Ramp and 3rd St												
11. I-215 SB On Ramp and 2nd St	0	0	0	0	418	160	0	0	0	197	218	0
12. I-215 NB On Ramp and 3rd St												
13. I-215 NB Ramps and 2nd St	180	0	1075	229	195	0	0	0	0	0	271	170
14. H St/G St and 3rd St	0	73	68	28	112	68	8	169	40	36	35	8
15. G St and 2nd St	91	77	29	105	979	106	85	131	40	26	265	31
16. G St and Rialto Ave	13	48	21	50	460	30	78	77	45	34	238	61
17. G St and Congress St	0	99	0	5	0	3	0	200	3	0	0	0
18. Parking Lot Entrance and Congress St												
19. E St and 2nd St	36	136	59	198	844	39	40	301	82	32	357	17
20. E St and Rialto Ave	36	181	48	25	387	74	23	185	20	22	219	17
21. E St and Parking Lot Entrance												
22. Arrowhead Ave and Rialto Ave	30	221	24	64	265	62	11	213	31	33	217	11
23. H St and 5th St	126	113	36	28	818	320	26	186	50	28	276	8
24. F St and Rialto Ave	0	0	0	35	347	0	21	0	26	0	224	32
25. E St and 5th St	38	146	50	32	654	71	50	233	23	44	279	18
26. E St and 4th St	23	242	99	5	66	32	12	337	20	13	32	11
27. E St-Inland Center Dr and Mill St												

INTERSECTION	PM 2009/2010/2011 VEHICLE TURNING MOVEMENT COUNTS											
	NORTHBOUND			EASTBOUND			SOUTHBOUND			WESTBOUND		
	L	T	R	L	T	R	L	T	R	L	T	R
1. K St and 3rd St	5	2	11	2	84	64	0	1	0	40	119	1
2. K St and 2nd St	35	5	16	7	263	23	23	22	21	25	271	7
3. K St and Rialto Ave	31	33	128	6	344	34	5	41	22	106	509	13
4. J St and 3rd St	1	0	10	0	86	1	0	0	0	19	155	0
5. J St and 2nd St	10	5	25	6	442	10	7	6	4	14	280	8
6. J St and Rialto Ave	5	10	11	28	413	4	6	10	9	38	543	9
7. I St and 3rd St	8	2	32	0	83	19	62	245	60	42	51	0
8. I St and 2nd St	11	35	196	6	318	8	85	170	33	37	240	9
9. I St and Rialto Ave	14	133	65	84	357	17	43	89	101	45	544	37
10. I-215 SB Off Ramp and 3rd St												
11. I-215 SB On Ramp and 2nd St	0	0	0	0	468	159	0	0	0	650	314	0
12. I-215 NB On Ramp and 3rd St												
13. I-215 NB Ramps and 2nd St	125	1	258	254	193	0	0	0	0	0	884	501
14. H St/G St and 3rd St	11	300	57	64	75	38	10	150	19	72	64	13
15. G St and 2nd St	257	185	48	74	305	27	53	139	86	81	942	77
16. G St and Rialto Ave	52	166	12	53	323	24	38	89	67	22	476	145
17. G St and Congress St	0	201	0	2	0	2	0	188	0	0	0	0
18. Parking Lot Entrance and Congress St												
19. E St and 2nd St	97	320	92	132	512	48	34	254	165	84	846	25
20. E St and Rialto Ave	104	529	66	18	302	84	27	344	43	79	473	21
21. E St and Parking Lot Entrance												
22. Arrowhead Ave and Rialto Ave	81	356	42	32	276	58	13	262	50	24	333	15
23. H St and 5th St	411	278	52	60	460	225	33	185	129	68	838	38
24. F St and Rialto Ave	0	0	0	38	339	0	23	0	74	0	523	34
25. E St and 5th St	93	350	44	28	438	42	28	299	45	48	761	60
26. E St and 4th St	58	472	24	8	73	47	10	361	36	49	172	13
27. E St-Inland Center Dr and Mill St												

	AM 2009 AUTO TURNING MOVEMENT COUNTS											
	NORTHBOUND			EASTBOUND			SOUTHBOUND			WESTBOUND		
INTERSECTION	L	T	R	L	T	R	L	T	R	L	T	R
1. K St and 3rd St	7	8	12	1	45	1	4	0	0	28	63	1
2. K St and 2nd St	14	3	36	7	228	11	7	22	10	34	113	19
3. K St and Rialto Ave	33	19	113	10	385	32	3	27	21	105	173	1
4. J St and 3rd St	4	0	5	0	61	0	0	0	0	4	99	0
5. J St and 2nd St	2	5	49	0	365	5	3	1	0	8	176	7
6. J St and Rialto Ave	0	6	2	41	456	2	4	4	4	29	228	6
7. I St and 3rd St	10	3	29	0	44	4	149	368	54	33	40	0
8. I St and 2nd St	4	15	119	5	290	4	105	258	16	34	150	11
9. I St and Rialto Ave	8	60	61	79	395	18	114	115	90	37	195	15
10. I-215 SB Off Ramp and 3rd St	0	0	0	0	0	0	0	0	0	0	0	0
11. I-215 SB On Ramp and 2nd St	0	0	0	0	397	152	0	0	0	187	207	0
12. I-215 NB On Ramp and 3rd St	0	0	0	0	0	0	0	0	0	0	0	0
13. I-215 NB Ramps and 2nd St	171	0	1021	218	185	0	0	0	0	0	257	162
14. H St/G St and 3rd St	0	64	65	24	109	62	6	163	35	31	34	8
15. G St and 2nd St	84	71	27	97	907	98	79	121	37	24	246	29
16. G St and Rialto Ave	12	44	19	46	426	28	72	71	42	32	221	57
17. G St and Congress St	0	92	0	5	0	3	0	185	3	0	0	0
18. Parking Lot Entrance and Congress St	0	0	0	0	0	0	0	0	0	0	0	0
19. E St and 2nd St	33	126	55	184	782	36	37	279	76	30	331	16
20. E St and Rialto Ave	33	168	44	23	359	69	21	171	19	20	203	16
21. E St and Parking Lot Entrance	0	0	0	0	0	0	0	0	0	0	0	0
22. Arrowhead Ave and Rialto Ave	28	205	22	59	246	57	10	197	29	31	201	10
23. H St and 5th St	120	108	34	27	778	304	25	177	48	27	263	8
24. F St and Rialto Ave	0	0	0	32	322	0	19	0	24	0	208	30
25. E St and 5th St	38	143	50	29	623	69	50	225	23	43	251	18
26. E St and 4th St	22	238	99	5	64	32	12	327	19	12	31	11
27. E St-Inland Center Dr and Mill St	0	0	0	0	0	0	0	0	0	0	0	0

	PM 2009 AUTO TURNING MOVEMENT COUNTS											
	NORTHBOUND			EASTBOUND			SOUTHBOUND			WESTBOUND		
INTERSECTION	L	T	R	L	T	R	L	T	R	L	T	R
1. K St and 3rd St	5	2	11	2	82	62	0	1	0	39	116	1
2. K St and 2nd St	34	5	16	7	256	22	22	21	20	24	264	7
3. K St and Rialto Ave	30	32	125	6	337	33	5	40	22	104	498	13
4. J St and 3rd St	1	0	10	0	84	1	0	0	0	18	151	0
5. J St and 2nd St	10	5	25	6	430	10	7	6	4	14	271	7
6. J St and Rialto Ave	5	10	11	28	398	4	6	10	9	37	537	8
7. I St and 3rd St	8	2	31	0	81	18	60	238	58	41	50	0
8. I St and 2nd St	11	34	191	6	309	8	83	165	32	36	233	9
9. I St and Rialto Ave	14	130	64	82	349	17	42	87	99	44	532	36
10. I-215 SB Off Ramp and 3rd St	0	0	0	0	0	0	0	0	0	0	0	0
11. I-215 SB On Ramp and 2nd St	0	0	0	0	455	155	0	0	0	632	305	0
12. I-215 NB On Ramp and 3rd St	0	0	0	0	0	0	0	0	0	0	0	0
13. I-215 NB Ramps and 2nd St	122	1	251	247	188	0	0	0	0	0	860	487
14. H St/G St and 3rd St	8	292	55	59	69	31	9	147	17	67	64	13
15. G St and 2nd St	244	176	46	70	290	26	50	132	82	77	894	73
16. G St and Rialto Ave	49	158	11	50	307	23	36	85	64	21	452	138
17. G St and Congress St	0	191	0	2	0	2	0	178	0	0	0	0
18. Parking Lot Entrance and Congress St	0	0	0	0	0	0	0	0	0	0	0	0
19. E St and 2nd St	92	304	87	125	486	46	32	241	157	80	803	24
20. E St and Rialto Ave	99	502	63	17	287	80	26	327	41	75	449	20
21. E St and Parking Lot Entrance	0	0	0	0	0	0	0	0	0	0	0	0
22. Arrowhead Ave and Rialto Ave	77	338	40	30	262	55	12	249	47	23	316	14
23. H St and 5th St	397	269	50	58	444	217	32	179	125	66	810	37
24. F St and Rialto Ave	0	0	0	36	322	0	22	0	70	0	497	32
25. E St and 5th St	91	344	44	28	413	40	27	290	45	47	734	60
26. E St and 4th St	57	467	24	8	68	45	9	351	36	49	171	13
27. E St-Inland Center Dr and Mill St	0	0	0	0	0	0	0	0	0	0	0	0

INTERSECTION	AM 2009 TRUCK TURNING MOVEMENT COUNTS												AM PEAK PERCENT TRUCK	AM PEAK HOUR FACTOR
	NORTHBOUND			EASTBOUND			SOUTHBOUND			WESTBOUND				
	L	T	R	L	T	R	L	T	R	L	T	R		
1. K St and 3rd St	0	0	1	0	2	0	0	0	0	1	3	0	0.0499	0.903
2. K St and 2nd St	1	0	2	0	12	1	0	1	1	2	6	1	0.0499	0.935
3. K St and Rialto Ave	2	1	6	1	22	2	0	2	1	6	10	0	0.0537	0.861
4. J St and 3rd St	0	0	0	0	3	0	0	0	0	0	5	0	0.0499	0.870
5. J St and 2nd St	0	0	4	2	17	0	0	0	0	0	7	1	0.0499	0.877
6. J St and Rialto Ave	0	0	0	5	25	0	0	0	0	1	10	1	0.0537	0.873
7. I St and 3rd St	0	0	2	0	2	0	8	19	3	2	2	0	0.0499	0.965
8. I St and 2nd St	0	1	6	0	15	0	6	14	1	2	8	1	0.0499	0.938
9. I St and Rialto Ave	0	3	3	4	22	1	6	6	5	2	11	1	0.0537	0.894
10. I-215 SB Off Ramp and 3rd St	0	0	0	0	0	0	0	0	0	0	0	0		
11. I-215 SB On Ramp and 2nd St	0	0	0	0	21	8	0	0	0	10	11	0	0.0499	0.951
12. I-215 NB On Ramp and 3rd St	0	0	0	0	0	0	0	0	0	0	0	0		
13. I-215 NB Ramps and 2nd St	9	0	54	11	10	0	0	0	0	0	14	8	0.0499	0.923
14. H St/G St and 3rd St	0	9	3	4	3	6	2	6	5	5	1	0	0.0732	0.814
15. G St and 2nd St	7	6	2	8	72	8	6	10	3	2	19	2	0.0732	0.938
16. G St and Rialto Ave	1	4	2	4	34	2	6	6	3	2	17	4	0.0732	0.785
17. G St and Congress St	0	7	0	0	0	0	0	15	0	0	0	0	0.0732	0.881
18. Parking Lot Entrance and Congress St	0	0	0	0	0	0	0	0	0	0	0	0		
19. E St and 2nd St	3	10	4	14	62	3	3	22	6	2	26	1	0.0732	0.923
20. E St and Rialto Ave	3	13	4	2	28	5	2	14	1	2	16	1	0.0732	0.775
21. E St and Parking Lot Entrance	0	0	0	0	0	0	0	0	0	0	0	0		
22. Arrowhead Ave and Rialto Ave	2	16	2	5	19	5	1	16	2	2	16	1	0.0732	0.849
23. H St and 5th St	6	5	2	1	40	16	1	9	2	1	13	0	0.0487	0.908
24. F St and Rialto Ave	0	0	0	3	25	0	2	0	2	0	16	2	0.0732	0.946
25. E St and 5th St	0	3	0	3	31	2	0	8	0	1	28	0	0.0487	0.858
26. E St and 4th St	1	4	0	0	2	0	0	10	1	1	1	0	0.0229	0.871
27. E St-Inland Center Dr and Mill St														

INTERSECTION	PM 2009 TRUCK TURNING MOVEMENT COUNTS												PM PEAK PERCENT TRUCK	PM PEAK HOUR FACTOR
	NORTHBOUND			EASTBOUND			SOUTHBOUND			WESTBOUND				
	L	T	R	L	T	R	L	T	R	L	T	R		
1. K St and 3rd St	0	0	0	0	2	2	0	0	0	1	3	0	0.0277	0.945
2. K St and 2nd St	1	0	0	0	7	1	1	1	1	1	7	0	0.0277	0.916
3. K St and Rialto Ave	1	1	3	0	7	1	0	1	0	2	11	0	0.0216	0.922
4. J St and 3rd St	0	0	0	0	2	0	0	0	0	1	4	0	0.0277	0.829
5. J St and 2nd St	0	0	0	0	12	0	0	0	0	0	9	1	0.0277	0.965
6. J St and Rialto Ave	0	0	0	0	15	0	0	0	0	1	6	1	0.0216	0.963
7. I St and 3rd St	0	0	1	0	2	1	2	7	2	1	1	0	0.0277	0.858
8. I St and 2nd St	0	1	5	0	9	0	2	5	1	1	7	0	0.0277	0.973
9. I St and Rialto Ave	0	3	1	2	8	0	1	2	2	1	12	1	0.0216	0.946
10. I-215 SB Off Ramp and 3rd St	0	0	0	0	0	0	0	0	0	0	0	0		
11. I-215 SB On Ramp and 2nd St	0	0	0	0	13	4	0	0	0	18	9	0	0.0277	0.934
12. I-215 NB On Ramp and 3rd St	0	0	0	0	0	0	0	0	0	0	0	0		
13. I-215 NB Ramps and 2nd St	3	0	7	7	5	0	0	0	0	0	24	14	0.0277	0.962
14. H St/G St and 3rd St	3	8	2	5	6	7	1	3	2	5	0	0	0.0505	0.957
15. G St and 2nd St	13	9	2	4	15	1	3	7	4	4	48	4	0.0505	0.924
16. G St and Rialto Ave	3	8	1	3	16	1	2	4	3	1	24	7	0.0505	0.867
17. G St and Congress St	0	10	0	0	0	0	0	10	0	0	0	0	0.0505	0.945
18. Parking Lot Entrance and Congress St	0	0	0	0	0	0	0	0	0	0	0	0		
19. E St and 2nd St	5	16	5	7	26	2	2	13	8	4	43	1	0.0505	0.891
20. E St and Rialto Ave	5	27	3	1	15	4	1	17	2	4	24	1	0.0505	0.955
21. E St and Parking Lot Entrance	0	0	0	0	0	0	0	0	0	0	0	0		
22. Arrowhead Ave and Rialto Ave	4	18	2	2	14	3	1	13	3	1	17	1	0.0505	0.788
23. H St and 5th St	14	9	2	2	16	8	1	6	4	2	28	1	0.0337	0.832
24. F St and Rialto Ave	0	0	0	2	17	0	1	0	4	0	26	2	0.0505	0.904
25. E St and 5th St	2	6	0	0	25	2	1	9	0	1	27	0	0.0337	0.890
26. E St and 4th St	1	5	0	0	5	2	1	10	0	0	1	0	0.0193	0.916
27. E St-Inland Center Dr and Mill St														

INTERSECTION	AM 2009 2 AXLE TRUCKS TURNING MOVEMENT COUNTS											
	NORTHBOUND			EASTBOUND			SOUTHBOUND			WESTBOUND		
	L	T	R	L	T	R	L	T	R	L	T	R
1. K St and 3rd St												
2. K St and 2nd St												
3. K St and Rialto Ave												
4. J St and 3rd St												
5. J St and 2nd St	0	0	4	2	1	0	0	0	0	0	2	0
6. J St and Rialto Ave	0	0	0	5	21	0	0	0	0	1	7	0
7. I St and 3rd St												
8. I St and 2nd St												
9. I St and Rialto Ave												
10. I-215 SB Off Ramp and 3rd St												
11. I-215 SB On Ramp and 2nd St												
12. I-215 NB On Ramp and 3rd St												
13. I-215 NB Ramps and 2nd St												
14. H St/G St and 3rd St	0	9	3	3	2	6	1	5	4	4	1	0
15. G St and 2nd St												
16. G St and Rialto Ave												
17. G St and Congress St												
18. Parking Lot Entrance and Congress St												
19. E St and 2nd St												
20. E St and Rialto Ave												
21. E St and Parking Lot Entrance												
22. Arrowhead Ave and Rialto Ave												
23. H St and 5th St												
24. F St and Rialto Ave												
25. E St and 5th St	0	3	0	3	28	0	0	8	0	1	20	0
26. E St and 4th St	1	4	0	0	2	0	0	9	0	1	1	0
27. E St-Inland Center Dr and Mill St												

INTERSECTION	PM 2009 2 AXLE TRUCKS TURNING MOVEMENT COUNTS											
	NORTHBOUND			EASTBOUND			SOUTHBOUND			WESTBOUND		
	L	T	R	L	T	R	L	T	R	L	T	R
1. K St and 3rd St												
2. K St and 2nd St												
3. K St and Rialto Ave												
4. J St and 3rd St												
5. J St and 2nd St	0	0	0	0	1	0	0	0	0	0	1	0
6. J St and Rialto Ave	0	0	0	0	11	0	0	0	0	1	6	0
7. I St and 3rd St												
8. I St and 2nd St												
9. I St and Rialto Ave												
10. I-215 SB Off Ramp and 3rd St												
11. I-215 SB On Ramp and 2nd St												
12. I-215 NB On Ramp and 3rd St												
13. I-215 NB Ramps and 2nd St												
14. H St/G St and 3rd St	1	2	2	3	2	7	0	2	2	5	0	0
15. G St and 2nd St												
16. G St and Rialto Ave												
17. G St and Congress St												
18. Parking Lot Entrance and Congress St												
19. E St and 2nd St												
20. E St and Rialto Ave												
21. E St and Parking Lot Entrance												
22. Arrowhead Ave and Rialto Ave												
23. H St and 5th St												
24. F St and Rialto Ave												
25. E St and 5th St	2	5	0	0	21	2	1	9	0	1	23	0
26. E St and 4th St	1	4	0	0	5	2	1	10	0	0	1	0
27. E St-Inland Center Dr and Mill St												

INTERSECTION	AM 2009 3 AXLE TRUCKS TURNING MOVEMENT COUNTS											
	NORTHBOUND			EASTBOUND			SOUTHBOUND			WESTBOUND		
	L	T	R	L	T	R	L	T	R	L	T	R
1. K St and 3rd St												
2. K St and 2nd St												
3. K St and Rialto Ave												
4. J St and 3rd St												
5. J St and 2nd St	0	0	0	0	1	0	0	0	0	0	1	1
6. J St and Rialto Ave	0	0	0	0	2	0	0	0	0	0	1	0
7. I St and 3rd St												
8. I St and 2nd St												
9. I St and Rialto Ave												
10. I-215 SB Off Ramp and 3rd St												
11. I-215 SB On Ramp and 2nd St												
12. I-215 NB On Ramp and 3rd St												
13. I-215 NB Ramps and 2nd St												
14. H St/G St and 3rd St	0	0	0	1	0	0	0	1	1	0	0	0
15. G St and 2nd St												
16. G St and Rialto Ave												
17. G St and Congress St												
18. Parking Lot Entrance and Congress St												
19. E St and 2nd St												
20. E St and Rialto Ave												
21. E St and Parking Lot Entrance												
22. Arrowhead Ave and Rialto Ave												
23. H St and 5th St												
24. F St and Rialto Ave												
25. E St and 5th St	0	0	0	0	1	0	0	0	0	0	5	0
26. E St and 4th St	0	0	0	0	0	0	0	0	0	0	0	0
27. E St-Inland Center Dr and Mill St												

INTERSECTION	PM 2009 3 AXLE TRUCKS TURNING MOVEMENT COUNTS											
	NORTHBOUND			EASTBOUND			SOUTHBOUND			WESTBOUND		
	L	T	R	L	T	R	L	T	R	L	T	R
1. K St and 3rd St												
2. K St and 2nd St												
3. K St and Rialto Ave												
4. J St and 3rd St												
5. J St and 2nd St	0	0	0	0	2	0	0	0	0	0	4	1
6. J St and Rialto Ave	0	0	0	0	0	0	0	0	0	0	0	0
7. I St and 3rd St												
8. I St and 2nd St												
9. I St and Rialto Ave												
10. I-215 SB Off Ramp and 3rd St												
11. I-215 SB On Ramp and 2nd St												
12. I-215 NB On Ramp and 3rd St												
13. I-215 NB Ramps and 2nd St												
14. H St/G St and 3rd St	1	2	0	2	0	0	1	0	0	0	0	0
15. G St and 2nd St												
16. G St and Rialto Ave												
17. G St and Congress St												
18. Parking Lot Entrance and Congress St												
19. E St and 2nd St												
20. E St and Rialto Ave												
21. E St and Parking Lot Entrance												
22. Arrowhead Ave and Rialto Ave												
23. H St and 5th St												
24. F St and Rialto Ave												
25. E St and 5th St	0	0	0	0	2	0	0	0	0	0	3	0
26. E St and 4th St	0	0	0	0	0	0	0	0	0	0	0	0
27. E St-Inland Center Dr and Mill St												

INTERSECTION	AM 2009 4+ AXLE TRUCKS TURNING MOVEMENT COUNTS											
	NORTHBOUND			EASTBOUND			SOUTHBOUND			WESTBOUND		
	L	T	R	L	T	R	L	T	R	L	T	R
1. K St and 3rd St												
2. K St and 2nd St												
3. K St and Rialto Ave												
4. J St and 3rd St												
5. J St and 2nd St	0	0	0	0	15	0	0	0	0	0	4	0
6. J St and Rialto Ave	0	0	0	0	2	0	0	0	0	0	2	1
7. I St and 3rd St												
8. I St and 2nd St												
9. I St and Rialto Ave												
10. I-215 SB Off Ramp and 3rd St												
11. I-215 SB On Ramp and 2nd St												
12. I-215 NB On Ramp and 3rd St												
13. I-215 NB Ramps and 2nd St												
14. H St/G St and 3rd St	0	0	0	0	1	0	1	0	0	1	0	0
15. G St and 2nd St												
16. G St and Rialto Ave												
17. G St and Congress St												
18. Parking Lot Entrance and Congress St												
19. E St and 2nd St												
20. E St and Rialto Ave												
21. E St and Parking Lot Entrance												
22. Arrowhead Ave and Rialto Ave												
23. H St and 5th St												
24. F St and Rialto Ave												
25. E St and 5th St	0	0	0	0	2	2	0	0	0	0	3	0
26. E St and 4th St	0	0	0	0	0	0	0	1	1	0	0	0
27. E St-Inland Center Dr and Mill St												

INTERSECTION	PM 2009 4+ AXLE TRUCKS TURNING MOVEMENT COUNTS											
	NORTHBOUND			EASTBOUND			SOUTHBOUND			WESTBOUND		
	L	T	R	L	T	R	L	T	R	L	T	R
1. K St and 3rd St												
2. K St and 2nd St												
3. K St and Rialto Ave												
4. J St and 3rd St												
5. J St and 2nd St	0	0	0	0	9	0	0	0	0	0	4	0
6. J St and Rialto Ave	0	0	0	0	4	0	0	0	0	0	0	1
7. I St and 3rd St												
8. I St and 2nd St												
9. I St and Rialto Ave												
10. I-215 SB Off Ramp and 3rd St												
11. I-215 SB On Ramp and 2nd St												
12. I-215 NB On Ramp and 3rd St												
13. I-215 NB Ramps and 2nd St												
14. H St/G St and 3rd St	1	4	0	0	4	0	0	1	0	0	0	0
15. G St and 2nd St												
16. G St and Rialto Ave												
17. G St and Congress St												
18. Parking Lot Entrance and Congress St												
19. E St and 2nd St												
20. E St and Rialto Ave												
21. E St and Parking Lot Entrance												
22. Arrowhead Ave and Rialto Ave												
23. H St and 5th St												
24. F St and Rialto Ave												
25. E St and 5th St	0	1	0	0	2	0	0	0	0	0	1	0
26. E St and 4th St	0	1	0	0	0	0	0	0	0	0	0	0
27. E St-Inland Center Dr and Mill St												

INTERSECTION	AM 2009 TOTAL TRUCKS TURNING MOVEMENT COUNTS											
	NORTHBOUND			EASTBOUND			SOUTHBOUND			WESTBOUND		
	L	T	R	L	T	R	L	T	R	L	T	R
1. K St and 3rd St												
2. K St and 2nd St												
3. K St and Rialto Ave												
4. J St and 3rd St												
5. J St and 2nd St	0	0	4	2	17	0	0	0	0	0	7	1
6. J St and Rialto Ave	0	0	0	5	25	0	0	0	0	1	10	1
7. I St and 3rd St												
8. I St and 2nd St												
9. I St and Rialto Ave												
10. I-215 SB Off Ramp and 3rd St												
11. I-215 SB On Ramp and 2nd St												
12. I-215 NB On Ramp and 3rd St												
13. I-215 NB Ramps and 2nd St												
14. H St/G St and 3rd St	0	9	3	4	3	6	2	6	5	5	1	0
15. G St and 2nd St												
16. G St and Rialto Ave												
17. G St and Congress St												
18. Parking Lot Entrance and Congress St												
19. E St and 2nd St												
20. E St and Rialto Ave												
21. E St and Parking Lot Entrance												
22. Arrowhead Ave and Rialto Ave												
23. H St and 5th St												
24. F St and Rialto Ave												
25. E St and 5th St	0	3	0	3	31	2	0	8	0	1	28	0
26. E St and 4th St	1	4	0	0	2	0	0	10	1	1	1	0
27. E St-Inland Center Dr and Mill St												

INTERSECTION	PM 2009 TOTAL TRUCKS TURNING MOVEMENT COUNTS											
	NORTHBOUND			EASTBOUND			SOUTHBOUND			WESTBOUND		
	L	T	R	L	T	R	L	T	R	L	T	R
1. K St and 3rd St												
2. K St and 2nd St												
3. K St and Rialto Ave												
4. J St and 3rd St												
5. J St and 2nd St	0	0	0	0	12	0	0	0	0	0	9	1
6. J St and Rialto Ave	0	0	0	0	15	0	0	0	0	1	6	1
7. I St and 3rd St												
8. I St and 2nd St												
9. I St and Rialto Ave												
10. I-215 SB Off Ramp and 3rd St												
11. I-215 SB On Ramp and 2nd St												
12. I-215 NB On Ramp and 3rd St												
13. I-215 NB Ramps and 2nd St												
14. H St/G St and 3rd St	3	8	2	5	6	7	1	3	2	5	0	0
15. G St and 2nd St												
16. G St and Rialto Ave												
17. G St and Congress St												
18. Parking Lot Entrance and Congress St												
19. E St and 2nd St												
20. E St and Rialto Ave												
21. E St and Parking Lot Entrance												
22. Arrowhead Ave and Rialto Ave												
23. H St and 5th St												
24. F St and Rialto Ave												
25. E St and 5th St	2	6	0	0	25	2	1	9	0	1	27	0
26. E St and 4th St	1	5	0	0	5	2	1	10	0	0	1	0
27. E St-Inland Center Dr and Mill St												

INTERSECTION	AM 2009 TOTAL PCE TRUCKS TURNING MOVEMENT COUNTS 2 AXLE= 1.5 3 AXLE= 2 4+ AXLE 3 NORTHBOUND			EASTBOUND			SOUTHBOUND			WESTBOUND			AM TRUCKS AVERAGE PCE FACTOR
	L	T	R	L	T	R	L	T	R	L	T	R	
1. K St and 3rd St													2.4677
2. K St and 2nd St													2.4677
3. K St and Rialto Ave													1.7143
4. J St and 3rd St													2.4677
5. J St and 2nd St	0	0	6	3	49	0	0	0	0	0	17	2	2.4677
6. J St and Rialto Ave	0	0	0	8	42	0	0	0	0	2	19	3	1.7143
7. I St and 3rd St													2.4677
8. I St and 2nd St													2.4677
9. I St and Rialto Ave													1.7143
10. I-215 SB Off Ramp and 3rd St													
11. I-215 SB On Ramp and 2nd St													2.4677
12. I-215 NB On Ramp and 3rd St													
13. I-215 NB Ramps and 2nd St													2.4677
14. H St/G St and 3rd St	0	14	5	7	6	9	5	10	8	9	2	0	1.6364
15. G St and 2nd St													1.6364
16. G St and Rialto Ave													1.6364
17. G St and Congress St													1.6364
18. Parking Lot Entrance and Congress St													
19. E St and 2nd St													1.6364
20. E St and Rialto Ave													1.6364
21. E St and Parking Lot Entrance													
22. Arrowhead Ave and Rialto Ave													1.6364
23. H St and 5th St													
24. F St and Rialto Ave													1.6364
25. E St and 5th St	0	5	0	5	50	6	0	12	0	2	49	0	1.6776
26. E St and 4th St	2	6	0	0	3	0	0	17	3	2	2	0	1.6500
27. E St-Inland Center Dr and Mill St													

INTERSECTION	PM 2009 TOTAL PCE TRUCKS TURNING MOVEMENT COUNTS 2 AXLE= 1.5 3 AXLE= 2 4+ AXLE 3 NORTHBOUND			EASTBOUND			SOUTHBOUND			WESTBOUND			PM TRUCKS AVERAGE PCE FACTOR
	L	T	R	L	T	R	L	T	R	L	T	R	
1. K St and 3rd St													2.5455
2. K St and 2nd St													2.5455
3. K St and Rialto Ave													1.8261
4. J St and 3rd St													2.5455
5. J St and 2nd St	0	0	0	0	33	0	0	0	0	0	22	2	2.5455
6. J St and Rialto Ave	0	0	0	0	29	0	0	0	0	2	9	3	1.8261
7. I St and 3rd St													2.5455
8. I St and 2nd St													2.5455
9. I St and Rialto Ave													1.8261
10. I-215 SB Off Ramp and 3rd St													
11. I-215 SB On Ramp and 2nd St													2.5455
12. I-215 NB On Ramp and 3rd St													
13. I-215 NB Ramps and 2nd St													2.5455
14. H St/G St and 3rd St	7	19	3	9	15	11	2	6	3	8	0	0	1.9286
15. G St and 2nd St													1.9286
16. G St and Rialto Ave													1.9286
17. G St and Congress St													1.9286
18. Parking Lot Entrance and Congress St													
19. E St and 2nd St													1.9286
20. E St and Rialto Ave													1.9286
21. E St and Parking Lot Entrance													
22. Arrowhead Ave and Rialto Ave													1.9286
23. H St and 5th St													
24. F St and Rialto Ave													1.9286
25. E St and 5th St	3	11	0	0	42	3	2	14	0	2	44	0	1.6164
26. E St and 4th St	2	9	0	0	8	3	2	15	0	0	2	0	1.5600
27. E St-Inland Center Dr and Mill St													

Intersection	2009 AM AUTO TURNING MOVEMENT COUNTS												PCE Factors
	NORTHBOUND			EASTBOUND			SOUTHBOUND			WESTBOUND			
	L	T	R	L	T	R	L	T	R	L	T	R	
1. K St and 3rd St	7	8	12	1	45	1	4	0	0	28	63	1	1.00
2. K St and 2nd St	14	3	36	7	228	11	7	22	10	34	113	19	1.00
3. K St and Rialto Ave	33	19	113	10	385	32	3	27	21	105	173	1	1.00
4. J St and 3rd St	4	0	5	0	61	0	0	0	0	4	99	0	1.00
5. J St and 2nd St	2	5	49	0	365	5	3	1	0	8	176	7	1.00
6. J St and Rialto Ave	0	6	2	41	456	2	4	4	4	29	228	6	1.00
7. I St and 3rd St	10	3	29	0	44	4	149	368	54	33	40	0	1.00
8. I St and 2nd St	4	15	119	5	290	4	105	258	16	34	150	11	1.00
9. I St and Rialto Ave	8	60	61	79	395	18	114	115	90	37	195	15	1.00
10. I-215 SB Off Ramp and 3rd St	0	0	0	0	0	0	0	0	0	0	0	0	
11. I-215 SB On Ramp and 2nd St	0	0	0	0	397	152	0	0	0	187	207	0	1.00
12. I-215 NB On Ramp and 3rd St	0	0	0	0	0	0	0	0	0	0	0	0	
13. I-215 NB Ramps and 2nd St	171	0	1021	218	185	0	0	0	0	0	257	162	1.00
14. H St/G St and 3rd St	0	64	65	24	109	62	6	163	35	31	34	8	1.00
15. G St and 2nd St	84	71	27	97	907	98	79	121	37	24	246	29	1.00
16. G St and Rialto Ave	12	44	19	46	426	28	72	71	42	32	221	57	1.00
17. G St and Congress St	0	92	0	5	0	3	0	185	3	0	0	0	1.00
18. Parking Lot Entrance and Congress St	0	0	0	0	0	0	0	0	0	0	0	0	
19. E St and 2nd St	33	126	55	184	782	36	37	279	76	30	331	16	1.00
20. E St and Rialto Ave	33	168	44	23	359	69	21	171	19	20	203	16	1.00
21. E St and Parking Lot Entrance	0	0	0	0	0	0	0	0	0	0	0	0	
22. Arrowhead Ave and Rialto Ave	28	205	22	59	246	57	10	197	29	31	201	10	1.00
23. H St and 5th St	120	108	34	27	778	304	25	177	48	27	263	8	1.00
24. F St and Rialto Ave	0	0	0	32	322	0	19	0	24	0	208	30	1.00
25. E St and 5th St	38	143	50	29	623	69	50	225	23	43	251	18	1.00
26. E St and 4th St	22	238	99	5	64	32	12	327	19	12	31	11	1.00
27. E St-Inland Center Dr and Mill St	0	0	0	0	0	0	0	0	0	0	0	0	1.00

Intersection	2009 AM TRUCK TURNING MOVEMENT COUNTS												PCE Factors
	NORTHBOUND			EASTBOUND			SOUTHBOUND			WESTBOUND			
	L	T	R	L	T	R	L	T	R	L	T	R	
1. K St and 3rd St	0	0	1	0	2	0	0	0	0	1	3	0	2.47
2. K St and 2nd St	1	0	2	0	12	1	0	1	1	2	6	1	2.47
3. K St and Rialto Ave	2	1	6	1	22	2	0	2	1	6	10	0	1.71
4. J St and 3rd St	0	0	0	0	3	0	0	0	0	0	5	0	2.47
5. J St and 2nd St	0	0	4	2	17	0	0	0	0	0	7	1	2.47
6. J St and Rialto Ave	0	0	0	5	25	0	0	0	0	1	10	1	1.71
7. I St and 3rd St	0	0	2	0	2	0	8	19	3	2	2	0	2.47
8. I St and 2nd St	0	1	6	0	15	0	6	14	1	2	8	1	2.47
9. I St and Rialto Ave	0	3	3	4	22	1	6	6	5	2	11	1	1.71
10. I-215 SB Off Ramp and 3rd St	0	0	0	0	0	0	0	0	0	0	0	0	
11. I-215 SB On Ramp and 2nd St	0	0	0	0	21	8	0	0	0	10	11	0	2.47
12. I-215 NB On Ramp and 3rd St	0	0	0	0	0	0	0	0	0	0	0	0	
13. I-215 NB Ramps and 2nd St	9	0	54	11	10	0	0	0	0	0	14	8	2.47
14. H St/G St and 3rd St	0	9	3	4	3	6	2	6	5	5	1	0	1.64
15. G St and 2nd St	7	6	2	8	72	8	6	10	3	2	19	2	1.64
16. G St and Rialto Ave	1	4	2	4	34	2	6	6	3	2	17	4	1.64
17. G St and Congress St	0	7	0	0	0	0	0	15	0	0	0	0	1.64
18. Parking Lot Entrance and Congress St	0	0	0	0	0	0	0	0	0	0	0	0	
19. E St and 2nd St	3	10	4	14	62	3	3	22	6	2	26	1	1.64
20. E St and Rialto Ave	3	13	4	2	28	5	2	14	1	2	16	1	1.64
21. E St and Parking Lot Entrance	0	0	0	0	0	0	0	0	0	0	0	0	
22. Arrowhead Ave and Rialto Ave	2	16	2	5	19	5	1	16	2	2	16	1	1.64
23. H St and 5th St	6	5	2	1	40	16	1	9	2	1	13	0	0.00
24. F St and Rialto Ave	0	0	0	3	25	0	2	0	2	0	16	2	1.64
25. E St and 5th St	0	3	0	3	31	2	0	8	0	1	28	0	1.68
26. E St and 4th St	1	4	0	0	2	0	0	10	1	1	1	0	1.65
27. E St-Inland Center Dr and Mill St	0	0	0	0	0	0	0	0	0	0	0	0	0.00
												Average PCE Factor	**1.80**

Intersection	2009 AM AUTO TURNING MOVEMENT COUNTS											
	NORTHBOUND			EASTBOUND			SOUTHBOUND			WESTBOUND		
	L	T	R	L	T	R	L	T	R	L	T	R
1. K St and 3rd St	7	8	12	1	45	1	4	0	0	28	63	1
2. K St and 2nd St	14	3	36	7	228	11	7	22	10	34	113	19
3. K St and Rialto Ave	33	19	113	10	385	32	3	27	21	105	173	1
4. J St and 3rd St	4	0	5	0	61	0	0	0	0	4	99	0
5. J St and 2nd St	2	5	49	0	365	5	3	1	0	8	176	7
6. J St and Rialto Ave	0	6	2	41	456	2	4	4	4	29	228	6
7. I St and 3rd St	10	3	29	0	44	4	149	368	54	33	40	0
8. I St and 2nd St	4	15	119	5	290	4	105	258	16	34	150	11
9. I St and Rialto Ave	8	60	61	79	395	18	114	115	90	37	195	15
10. I-215 SB Off Ramp and 3rd St	0	0	0	0	0	0	0	0	0	0	0	0
11. I-215 SB On Ramp and 2nd St	0	0	0	0	397	152	0	0	0	187	207	0
12. I-215 NB On Ramp and 3rd St	0	0	0	0	0	0	0	0	0	0	0	0
13. I-215 NB Ramps and 2nd St	171	0	1021	218	185	0	0	0	0	0	257	162
14. H St/G St and 3rd St	0	64	65	24	109	62	6	163	35	31	34	8
15. G St and 2nd St	84	71	27	97	907	98	79	121	37	24	246	29
16. G St and Rialto Ave	12	44	19	46	426	28	72	71	42	32	221	57
17. G St and Congress St	0	92	0	5	0	3	0	185	3	0	0	0
18. Parking Lot Entrance and Congress St	0	0	0	0	0	0	0	0	0	0	0	0
19. E St and 2nd St	33	126	55	184	782	36	37	279	76	30	331	16
20. E St and Rialto Ave	33	168	44	23	359	69	21	171	19	20	203	16
21. E St and Parking Lot Entrance	0	0	0	0	0	0	0	0	0	0	0	0
22. Arrowhead Ave and Rialto Ave	28	205	22	59	246	57	10	197	29	31	201	10
23. H St and 5th St	120	108	34	27	778	304	25	177	48	27	263	8
24. F St and Rialto Ave	0	0	0	32	322	0	19	0	24	0	208	30
25. E St and 5th St	38	143	50	29	623	69	50	225	23	43	251	18
26. E St and 4th St	22	238	99	5	64	32	12	327	19	12	31	11
27. E St-Inland Center Dr and Mill St	0	0	0	0	0	0	0	0	0	0	0	0

Intersection	2009 AM PCE TRUCK TURNING MOVEMENT COUNTS											
	NORTHBOUND			EASTBOUND			SOUTHBOUND			WESTBOUND		
	L	T	R	L	T	R	L	T	R	L	T	R
1. K St and 3rd St	1	1	2	0	6	0	0	0	0	4	8	0
2. K St and 2nd St	2	0	5	1	30	1	1	3	1	4	15	2
3. K St and Rialto Ave	3	2	11	1	37	3	0	3	2	10	17	0
4. J St and 3rd St	0	0	1	0	8	0	0	0	0	0	13	0
5. J St and 2nd St	0	0	6	3	49	0	0	0	0	0	17	2
6. J St and Rialto Ave	0	0	0	8	42	0	0	0	0	2	19	3
7. I St and 3rd St	1	0	4	0	6	0	19	48	7	4	5	0
8. I St and 2nd St	0	2	15	1	38	0	14	34	2	4	19	1
9. I St and Rialto Ave	1	6	6	8	38	2	11	11	9	4	19	1
10. I-215 SB Off Ramp and 3rd St	0	0	0	0	0	0	0	0	0	0	0	0
11. I-215 SB On Ramp and 2nd St	0	0	0	0	51	20	0	0	0	24	27	0
12. I-215 NB On Ramp and 3rd St	0	0	0	0	0	0	0	0	0	0	0	0
13. I-215 NB Ramps and 2nd St	22	0	132	28	24	0	0	0	0	0	33	21
14. H St/G St and 3rd St	0	14	5	7	6	9	5	10	8	9	2	0
15. G St and 2nd St	11	9	3	13	117	13	10	16	5	3	32	4
16. G St and Rialto Ave	2	6	3	6	55	4	9	9	5	4	29	7
17. G St and Congress St	0	12	0	1	0	0	0	24	0	0	0	0
18. Parking Lot Entrance and Congress St	0	0	0	0	0	0	0	0	0	0	0	0
19. E St and 2nd St	4	16	7	24	101	5	5	36	10	4	43	2
20. E St and Rialto Ave	4	22	6	3	46	9	3	22	2	3	26	2
21. E St and Parking Lot Entrance	0	0	0	0	0	0	0	0	0	0	0	0
22. Arrowhead Ave and Rialto Ave	4	26	3	8	32	7	1	26	4	4	26	1
23. H St and 5th St	0	0	0	0	0	0	0	0	0	0	0	0
24. F St and Rialto Ave	0	0	0	4	42	0	3	0	3	0	27	4
25. E St and 5th St	0	5	0	5	52	3	0	13	0	2	47	0
26. E St and 4th St	2	7	0	0	3	0	0	17	2	2	2	0
27. E St-Inland Center Dr and Mill St	0	0	0	0	0	0	0	0	0	0	0	0

Intersection	2009 AM TURNING MOVEMENT COUNTS - TOTAL (AUTO + PCE TRUCK)											
	NORTHBOUND			EASTBOUND			SOUTHBOUND			WESTBOUND		
	L	T	R	L	T	R	L	T	R	L	T	R
1. K St and 3rd St	8	9	14	1	50	1	4	0	0	31	71	1
2. K St and 2nd St	16	3	41	8	258	13	8	25	12	39	128	21
3. K St and Rialto Ave	36	21	124	11	423	35	3	30	23	115	190	1
4. J St and 3rd St	4	0	5	0	69	0	0	0	0	4	112	0
5. J St and 2nd St	2	5	55	3	414	5	3	1	0	8	193	9
6. J St and Rialto Ave	0	6	2	49	498	2	4	4	4	31	247	9
7. I St and 3rd St	11	3	33	0	49	4	169	415	61	38	45	0
8. I St and 2nd St	4	17	134	5	327	4	119	292	18	39	170	13
9. I St and Rialto Ave	8	65	66	86	433	20	125	126	99	40	214	17
10. I-215 SB Off Ramp and 3rd St	0	0	0	0	0	0	0	0	0	0	0	0
11. I-215 SB On Ramp and 2nd St	0	0	0	0	449	172	0	0	0	211	234	0
12. I-215 NB On Ramp and 3rd St	0	0	0	0	0	0	0	0	0	0	0	0
13. I-215 NB Ramps and 2nd St	193	0	1154	246	209	0	0	0	0	0	291	182
14. H St/G St and 3rd St	0	78	70	31	115	71	11	173	43	40	36	8
15. G St and 2nd St	95	81	30	110	1025	111	89	137	42	27	277	32
16. G St and Rialto Ave	14	50	22	52	481	31	82	81	47	36	249	64
17. G St and Congress St	0	104	0	5	0	3	0	209	3	0	0	0
18. Parking Lot Entrance and Congress St	0	0	0	0	0	0	0	0	0	0	0	0
19. E St and 2nd St	38	142	62	207	883	41	42	315	86	33	374	18
20. E St and Rialto Ave	38	189	50	26	405	77	24	194	21	23	229	18
21. E St and Parking Lot Entrance	0	0	0	0	0	0	0	0	0	0	0	0
22. Arrowhead Ave and Rialto Ave	31	231	25	67	277	65	12	223	32	35	227	12
23. H St and 5th St	120	108	34	27	778	304	25	177	48	27	263	8
24. F St and Rialto Ave	0	0	0	37	363	0	22	0	27	0	234	33
25. E St and 5th St	38	148	50	34	675	72	50	238	23	45	298	18
26. E St and 4th St	24	245	99	5	67	32	12	344	21	14	33	11
27. E St-Inland Center Dr and Mill St	0	0	0	0	0	0	0	0	0	0	0	0

Intersection	2009 PM AUTO TURNING MOVEMENT COUNTS												PCE Factors
	NORTHBOUND			EASTBOUND			SOUTHBOUND			WESTBOUND			
	L	T	R	L	T	R	L	T	R	L	T	R	
1. K St and 3rd St	5	2	11	2	82	62	0	1	0	39	116	1	1.00
2. K St and 2nd St	34	5	16	7	256	22	22	21	20	24	264	7	1.00
3. K St and Rialto Ave	30	32	125	6	337	33	5	40	22	104	498	13	1.00
4. J St and 3rd St	1	0	10	0	84	1	0	0	0	18	151	0	1.00
5. J St and 2nd St	10	5	25	6	430	10	7	6	4	14	271	7	1.00
6. J St and Rialto Ave	5	10	11	28	398	4	6	10	9	37	537	8	1.00
7. I St and 3rd St	8	2	31	0	81	18	60	238	58	41	50	0	1.00
8. I St and 2nd St	11	34	191	6	309	8	83	165	32	36	233	9	1.00
9. I St and Rialto Ave	14	130	64	82	349	17	42	87	99	44	532	36	1.00
10. I-215 SB Off Ramp and 3rd St	0	0	0	0	0	0	0	0	0	0	0	0	
11. I-215 SB On Ramp and 2nd St	0	0	0	0	455	155	0	0	0	632	305	0	1.00
12. I-215 NB On Ramp and 3rd St	0	0	0	0	0	0	0	0	0	0	0	0	
13. I-215 NB Ramps and 2nd St	122	1	251	247	188	0	0	0	0	0	860	487	1.00
14. H St/G St and 3rd St	8	292	55	59	69	31	9	147	17	67	64	13	1.00
15. G St and 2nd St	244	176	46	70	290	26	50	132	82	77	894	73	1.00
16. G St and Rialto Ave	49	158	11	50	307	23	36	85	64	21	452	138	1.00
17. G St and Congress St	0	191	0	2	0	2	0	178	0	0	0	0	1.00
18. Parking Lot Entrance and Congress St	0	0	0	0	0	0	0	0	0	0	0	0	
19. E St and 2nd St	92	304	87	125	486	46	32	241	157	80	803	24	1.00
20. E St and Rialto Ave	99	502	63	17	287	80	26	327	41	75	449	20	1.00
21. E St and Parking Lot Entrance	0	0	0	0	0	0	0	0	0	0	0	0	
22. Arrowhead Ave and Rialto Ave	77	338	40	30	262	55	12	249	47	23	316	14	1.00
23. H St and 5th St	397	269	50	58	444	217	32	179	125	66	810	37	1.00
24. F St and Rialto Ave	0	0	0	36	322	0	22	0	70	0	497	32	1.00
25. E St and 5th St	91	344	44	28	413	40	27	290	45	47	734	60	1.00
26. E St and 4th St	57	467	24	8	68	45	9	351	36	49	171	13	1.00
27. E St-Inland Center Dr and Mill St	0	0	0	0	0	0	0	0	0	0	0	0	1.00

Intersection	2009 PM TRUCK TURNING MOVEMENT COUNTS												PCE Factors
	NORTHBOUND			EASTBOUND			SOUTHBOUND			WESTBOUND			
	L	T	R	L	T	R	L	T	R	L	T	R	
1. K St and 3rd St	0	0	0	0	2	2	0	0	0	1	3	0	2.55
2. K St and 2nd St	1	0	0	0	7	1	1	1	1	1	7	0	2.55
3. K St and Rialto Ave	1	1	3	0	7	1	0	1	0	2	11	0	1.83
4. J St and 3rd St	0	0	0	0	2	0	0	0	0	1	4	0	2.55
5. J St and 2nd St	0	0	0	0	12	0	0	0	0	0	9	1	2.55
6. J St and Rialto Ave	0	0	0	0	15	0	0	0	0	1	6	1	1.83
7. I St and 3rd St	0	0	1	0	2	1	2	7	2	1	1	0	2.55
8. I St and 2nd St	0	1	5	0	9	0	2	5	1	1	7	0	2.55
9. I St and Rialto Ave	0	3	1	2	8	0	1	2	2	1	12	1	1.83
10. I-215 SB Off Ramp and 3rd St	0	0	0	0	0	0	0	0	0	0	0	0	
11. I-215 SB On Ramp and 2nd St	0	0	0	0	13	4	0	0	0	18	9	0	2.55
12. I-215 NB On Ramp and 3rd St	0	0	0	0	0	0	0	0	0	0	0	0	
13. I-215 NB Ramps and 2nd St	3	0	7	7	5	0	0	0	0	0	24	14	2.55
14. H St/G St and 3rd St	3	8	2	5	6	7	1	3	2	5	0	0	1.93
15. G St and 2nd St	13	9	2	4	15	1	3	7	4	4	48	4	1.93
16. G St and Rialto Ave	3	8	1	3	16	1	2	4	3	1	24	7	1.93
17. G St and Congress St	0	10	0	0	0	0	0	10	0	0	0	0	1.93
18. Parking Lot Entrance and Congress St	0	0	0	0	0	0	0	0	0	0	0	0	
19. E St and 2nd St	5	16	5	7	26	2	2	13	8	4	43	1	1.93
20. E St and Rialto Ave	5	27	3	1	15	4	1	17	2	4	24	1	1.93
21. E St and Parking Lot Entrance	0	0	0	0	0	0	0	0	0	0	0	0	
22. Arrowhead Ave and Rialto Ave	4	18	2	2	14	3	1	13	3	1	17	1	1.93
23. H St and 5th St	14	9	2	2	16	8	1	6	4	2	28	1	0.00
24. F St and Rialto Ave	0	0	0	2	17	0	1	0	4	0	26	2	1.93
25. E St and 5th St	2	6	0	0	25	2	1	9	0	1	27	0	1.62
26. E St and 4th St	1	5	0	0	5	2	1	10	0	0	1	0	1.56
27. E St-Inland Center Dr and Mill St	0	0	0	0	0	0	0	0	0	0	0	0	0.00
												Average PCE Factor	**1.93**

Intersection	2009 PM AUTO TURNING MOVEMENT COUNTS											
	NORTHBOUND			EASTBOUND			SOUTHBOUND			WESTBOUND		
	L	T	R	L	T	R	L	T	R	L	T	R
1. K St and 3rd St	5	2	11	2	82	62	0	1	0	39	116	1
2. K St and 2nd St	34	5	16	7	256	22	22	21	20	24	264	7
3. K St and Rialto Ave	30	32	125	6	337	33	5	40	22	104	498	13
4. J St and 3rd St	1	0	10	0	84	1	0	0	0	18	151	0
5. J St and 2nd St	10	5	25	6	430	10	7	6	4	14	271	7
6. J St and Rialto Ave	5	10	11	28	398	4	6	10	9	37	537	8
7. I St and 3rd St	8	2	31	0	81	18	60	238	58	41	50	0
8. I St and 2nd St	11	34	191	6	309	8	83	165	32	36	233	9
9. I St and Rialto Ave	14	130	64	82	349	17	42	87	99	44	532	36
10. I-215 SB Off Ramp and 3rd St	0	0	0	0	0	0	0	0	0	0	0	0
11. I-215 SB On Ramp and 2nd St	0	0	0	0	455	155	0	0	0	632	305	0
12. I-215 NB On Ramp and 3rd St	0	0	0	0	0	0	0	0	0	0	0	0
13. I-215 NB Ramps and 2nd St	122	1	251	247	188	0	0	0	0	0	860	487
14. H St/G St and 3rd St	8	292	55	59	69	31	9	147	17	67	64	13
15. G St and 2nd St	244	176	46	70	290	26	50	132	82	77	894	73
16. G St and Rialto Ave	49	158	11	50	307	23	36	85	64	21	452	138
17. G St and Congress St	0	191	0	2	0	2	0	178	0	0	0	0
18. Parking Lot Entrance and Congress St	0	0	0	0	0	0	0	0	0	0	0	0
19. E St and 2nd St	92	304	87	125	486	46	32	241	157	80	803	24
20. E St and Rialto Ave	99	502	63	17	287	80	26	327	41	75	449	20
21. E St and Parking Lot Entrance	0	0	0	0	0	0	0	0	0	0	0	0
22. Arrowhead Ave and Rialto Ave	77	338	40	30	262	55	12	249	47	23	316	14
23. H St and 5th St	397	269	50	58	444	217	32	179	125	66	810	37
24. F St and Rialto Ave	0	0	0	36	322	0	22	0	70	0	497	32
25. E St and 5th St	91	344	44	28	413	40	27	290	45	47	734	60
26. E St and 4th St	57	467	24	8	68	45	9	351	36	49	171	13
27. E St-Inland Center Dr and Mill St	0	0	0	0	0	0	0	0	0	0	0	0

Intersection	2009 PM PCE TRUCK TURNING MOVEMENT COUNTS											
	NORTHBOUND			EASTBOUND			SOUTHBOUND			WESTBOUND		
	L	T	R	L	T	R	L	T	R	L	T	R
1. K St and 3rd St	0	0	1	0	6	5	0	0	0	3	8	0
2. K St and 2nd St	2	0	1	0	19	2	2	2	1	2	19	0
3. K St and Rialto Ave	1	1	5	0	14	1	0	2	1	4	20	1
4. J St and 3rd St	0	0	1	0	6	0	0	0	0	1	11	0
5. J St and 2nd St	0	0	0	0	33	0	0	0	0	0	22	2
6. J St and Rialto Ave	0	0	0	0	29	0	0	0	0	2	9	3
7. I St and 3rd St	1	0	2	0	6	1	4	17	4	3	4	0
8. I St and 2nd St	1	2	14	0	22	1	6	12	2	3	17	1
9. I St and Rialto Ave	1	5	3	3	14	1	2	4	4	2	21	1
10. I-215 SB Off Ramp and 3rd St	0	0	0	0	0	0	0	0	0	0	0	0
11. I-215 SB On Ramp and 2nd St	0	0	0	0	33	11	0	0	0	46	22	0
12. I-215 NB On Ramp and 3rd St	0	0	0	0	0	0	0	0	0	0	0	0
13. I-215 NB Ramps and 2nd St	9	0	18	18	14	0	0	0	0	0	62	35
14. H St/G St and 3rd St	7	19	3	9	15	11	2	6	3	8	0	0
15. G St and 2nd St	25	18	5	7	30	3	5	14	8	8	92	8
16. G St and Rialto Ave	5	16	1	5	31	2	4	9	7	2	46	14
17. G St and Congress St	0	20	0	0	0	0	0	18	0	0	0	0
18. Parking Lot Entrance and Congress St	0	0	0	0	0	0	0	0	0	0	0	0
19. E St and 2nd St	9	31	9	13	50	5	3	25	16	8	82	2
20. E St and Rialto Ave	10	52	6	2	29	8	3	34	4	8	46	2
21. E St and Parking Lot Entrance	0	0	0	0	0	0	0	0	0	0	0	0
22. Arrowhead Ave and Rialto Ave	8	35	4	3	27	6	1	26	5	2	32	1
23. H St and 5th St	0	0	0	0	0	0	0	0	0	0	0	0
24. F St and Rialto Ave	0	0	0	4	33	0	2	0	7	0	51	3
25. E St and 5th St	3	10	0	0	40	3	2	15	0	2	44	0
26. E St and 4th St	2	8	0	0	8	3	2	16	0	0	2	0
27. E St-Inland Center Dr and Mill St	0	0	0	0	0	0	0	0	0	0	0	0

Intersection	2009 PM TURNING MOVEMENT COUNTS - TOTAL (AUTO + PCE TRUCK)											
	NORTHBOUND			EASTBOUND			SOUTHBOUND			WESTBOUND		
	L	T	R	L	T	R	L	T	R	L	T	R
1. K St and 3rd St	5	2	11	2	88	67	0	1	0	42	124	1
2. K St and 2nd St	36	5	17	7	274	24	24	23	22	26	283	7
3. K St and Rialto Ave	32	34	130	6	350	35	5	42	22	108	518	13
4. J St and 3rd St	1	0	10	0	90	1	0	0	0	20	162	0
5. J St and 2nd St	10	5	25	6	463	10	7	6	4	14	293	9
6. J St and Rialto Ave	5	10	11	28	427	4	6	10	9	39	546	11
7. I St and 3rd St	8	2	33	0	87	20	65	255	63	44	53	0
8. I St and 2nd St	11	36	204	6	332	8	89	177	34	39	250	9
9. I St and Rialto Ave	14	135	66	86	363	17	44	91	103	46	554	38
10. I-215 SB Off Ramp and 3rd St	0	0	0	0	0	0	0	0	0	0	0	0
11. I-215 SB On Ramp and 2nd St	0	0	0	0	488	166	0	0	0	678	327	0
12. I-215 NB On Ramp and 3rd St	0	0	0	0	0	0	0	0	0	0	0	0
13. I-215 NB Ramps and 2nd St	130	1	269	265	201	0	0	0	0	0	922	522
14. H St/G St and 3rd St	15	311	58	68	84	42	11	153	20	75	64	13
15. G St and 2nd St	269	194	50	77	319	28	55	146	90	85	986	81
16. G St and Rialto Ave	54	174	13	55	338	25	40	93	70	23	498	152
17. G St and Congress St	0	210	0	2	0	2	0	197	0	0	0	0
18. Parking Lot Entrance and Congress St	0	0	0	0	0	0	0	0	0	0	0	0
19. E St and 2nd St	102	335	96	138	536	50	36	266	173	88	886	26
20. E St and Rialto Ave	109	554	69	19	316	88	28	360	45	83	495	22
21. E St and Parking Lot Entrance	0	0	0	0	0	0	0	0	0	0	0	0
22. Arrowhead Ave and Rialto Ave	85	373	44	34	289	61	14	274	52	25	349	16
23. H St and 5th St	397	269	50	58	444	217	32	179	125	66	810	37
24. F St and Rialto Ave	0	0	0	40	355	0	24	0	77	0	548	36
25. E St and 5th St	94	354	44	28	453	43	29	305	45	49	778	60
26. E St and 4th St	59	475	24	8	76	48	11	367	36	49	173	13
27. E St-Inland Center Dr and Mill St	0	0	0	0	0	0	0	0	0	0	0	0

2011 VEHICLE TURNING MOVEMENT COUNTS	E STREET				INLAND CENTER DRIVE				MILL STREET				E STREET				MILL STREET			
27. E St-Inland Center Dr and Mill St	NORTHBOUND				NORTHEASTBOUND				EASTBOUND				SOUTHBOUND				WESTBOUND			
	HL	L	T	R	HL	BL	BR	HR	L	T	R	HR	L	T	BR	R	L	BL	T	R
AM PK HR	21	46	157	50	4	103	173	36	62	327	60	2	24	151	33	38	51	119	267	19
PM PK HR	35	144	474	98	14	138	171	43	96	299	73	5	25	332	105	74	73	232	414	26

2011 AUTO TURNING MOVEMENT COUNTS	E STREET				INLAND CENTER DRIVE				MILL STREET				E STREET				MILL STREET			
27. E St-Inland Center Dr and Mill St	NORTHBOUND				NORTHEASTBOUND				EASTBOUND				SOUTHBOUND				WESTBOUND			
	HL	L	T	R	HL	BL	BR	HR	L	T	R	HR	L	T	BR	R	L	BL	T	R
AM PK HR	19	43	146	46	4	95	160	33	57	303	56	2	22	140	31	35	47	110	247	18
PM PK HR	33	137	450	93	13	131	162	41	91	284	69	5	24	315	100	70	69	220	393	25

2011 TRUCK TURNING MOVEMENT COUNTS	E STREET				INLAND CENTER DRIVE				MILL STREET				E STREET				MILL STREET			
27. E St-Inland Center Dr and Mill St	NORTHBOUND				NORTHEASTBOUND				EASTBOUND				SOUTHBOUND				WESTBOUND			
	HL	L	T	R	HL	BL	BR	HR	L	T	R	HR	L	T	BR	R	L	BL	T	R
AM PK HR	2	3	11	4	0	8	13	3	5	24	4	0	2	11	2	3	4	9	20	1
PM PK HR	2	7	24	5	1	7	9	2	5	15	4	0	1	17	5	4	4	12	21	1

2011 TRUCK PCE VOLUMES	E STREET				INLAND CENTER DRIVE				MILL STREET				E STREET				MILL STREET			
27. E St-Inland Center Dr and Mill St	NORTHBOUND				NORTHEASTBOUND				EASTBOUND				SOUTHBOUND				WESTBOUND			
	HL	L	T	R	HL	BL	BR	HR	L	T	R	HR	L	T	BR	R	L	BL	T	R
AM PK HR	3	6	19	6	0	12	21	4	7	39	7	0	3	18	4	5	6	14	32	2
PM PK HR	3	14	46	10	1	13	17	4	9	29	7	0	2	32	10	7	7	23	40	3

2011 TOTAL (AUTO + TRUCK PCE) VOLUMES	E STREET				INLAND CENTER DRIVE				MILL STREET				E STREET				MILL STREET			
27. E St-Inland Center Dr and Mill St	NORTHBOUND				NORTHEASTBOUND				EASTBOUND				SOUTHBOUND				WESTBOUND			
	HL	L	T	R	HL	BL	BR	HR	L	T	R	HR	L	T	BR	R	L	BL	T	R
AM PK HR	22	48	164	52	4	108	181	38	65	342	63	2	25	158	35	40	53	125	279	20
PM PK HR	37	151	496	103	15	144	179	45	101	313	76	5	26	348	110	77	76	243	433	27

2035 NO PROJECT TURN VOLUMES	E STREET				INLAND CENTER DRIVE				MILL STREET				E STREET				MILL STREET			
27. E St-Inland Center Dr and Mill St	NORTHBOUND				NORTHEASTBOUND				EASTBOUND				SOUTHBOUND				WESTBOUND			
	HL	L	T	R	HL	BL	BR	HR	L	T	R	HR	L	T	BR	R	L	BL	T	R
AM PK HR	29	63	217	69	4	111	187	39	117	615	113	4	38	239	52	60	64	149	335	24
PM PK HR	53	216	711	147	15	145	179	45	150	466	114	8	31	411	130	92	112	355	633	40

DIFFERENCE (2035-2011)	E STREET				INLAND CENTER DRIVE				MILL STREET				E STREET				MILL STREET			
27. E St-Inland Center Dr and Mill St	NORTHBOUND				NORTHEASTBOUND				EASTBOUND				SOUTHBOUND				WESTBOUND			
	HL	L	T	R	HL	BL	BR	HR	L	T	R	HR	L	T	BR	R	L	BL	T	R
AM PK HR	7	15	53	17	0	3	6	1	52	273	50	2	13	81	17	20	11	24	56	4
PM PK HR	16	65	215	44	0	1	0	0	49	153	38	3	5	63	20	15	36	112	200	13

ADJUSTED DIFFERENCE (0.125)	E STREET				INLAND CENTER DRIVE				MILL STREET				E STREET				MILL STREET			
27. E St-Inland Center Dr and Mill St	NORTHBOUND				NORTHEASTBOUND				EASTBOUND				SOUTHBOUND				WESTBOUND			
	HL	L	T	R	HL	BL	BR	HR	L	T	R	HR	L	T	BR	R	L	BL	T	R
AM PK HR	1	2	7	2	0	0	1	0	7	34	6	0	2	10	2	3	1	3	7	1
PM PK HR	2	8	27	6	0	0	0	0	6	19	5	0	1	8	3	2	4	14	25	2

2014 NO PROJECT TURN VOLUMES	E STREET				INLAND CENTER DRIVE				MILL STREET				E STREET				MILL STREET			
27. E St-Inland Center Dr and Mill St	NORTHBOUND				NORTHEASTBOUND				EASTBOUND				SOUTHBOUND				WESTBOUND			
	HL	L	T	R	HL	BL	BR	HR	L	T	R	HR	L	T	BR	R	L	BL	T	R
AM PK HR	23	50	171	54	4	108	182	38	71	376	69	2	27	168	37	42	55	128	286	20
PM PK HR	39	159	523	108	15	145	179	45	107	332	81	6	27	356	112	79	81	257	458	29

VOLUME DEVELOPMENT WORKSHEETS

MODEL PLOTS

SCAG RTP 2008 AM (Autos) Peak Hour Volumes

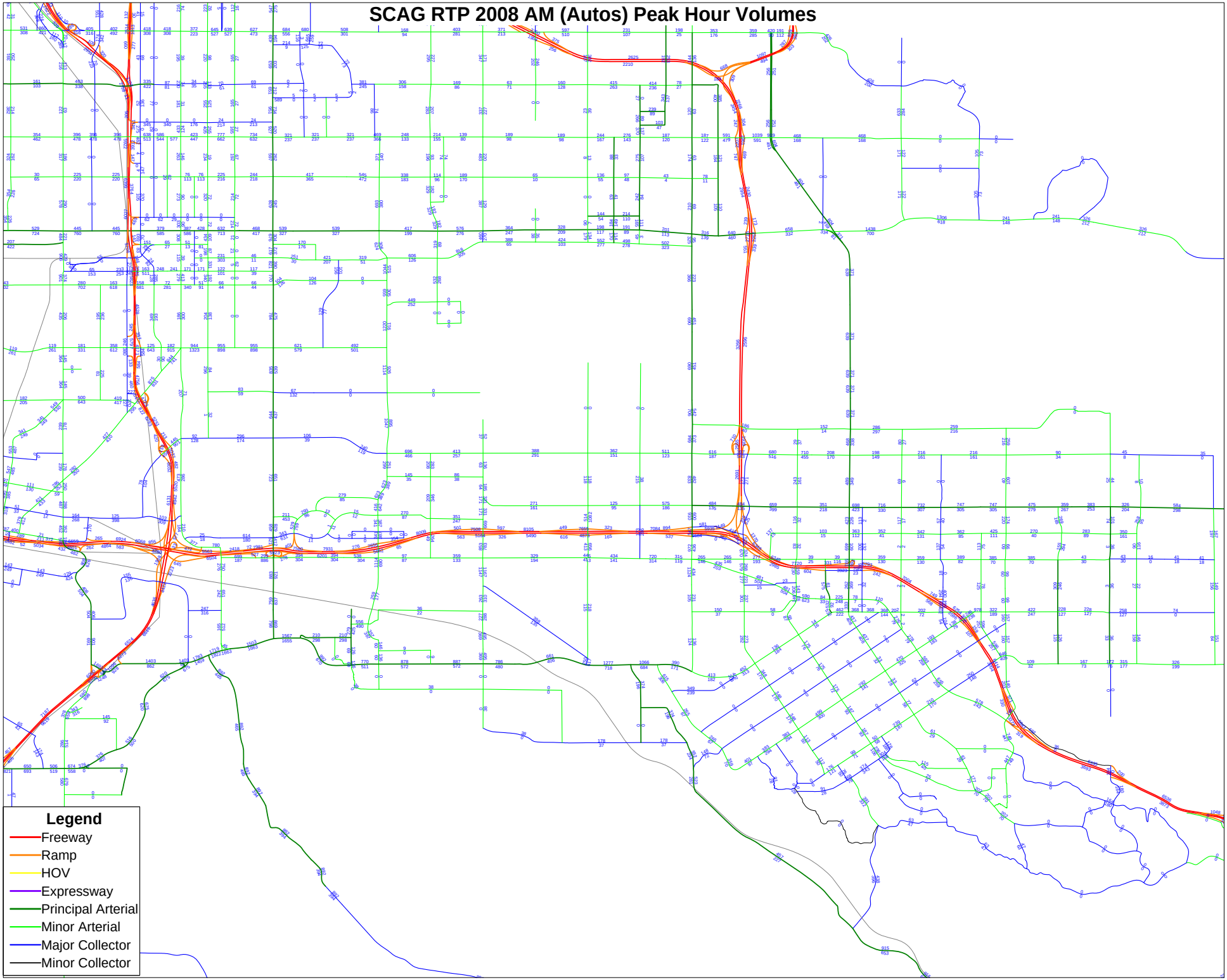

SCAG RTP 2008 AM Peak Hour Volumes

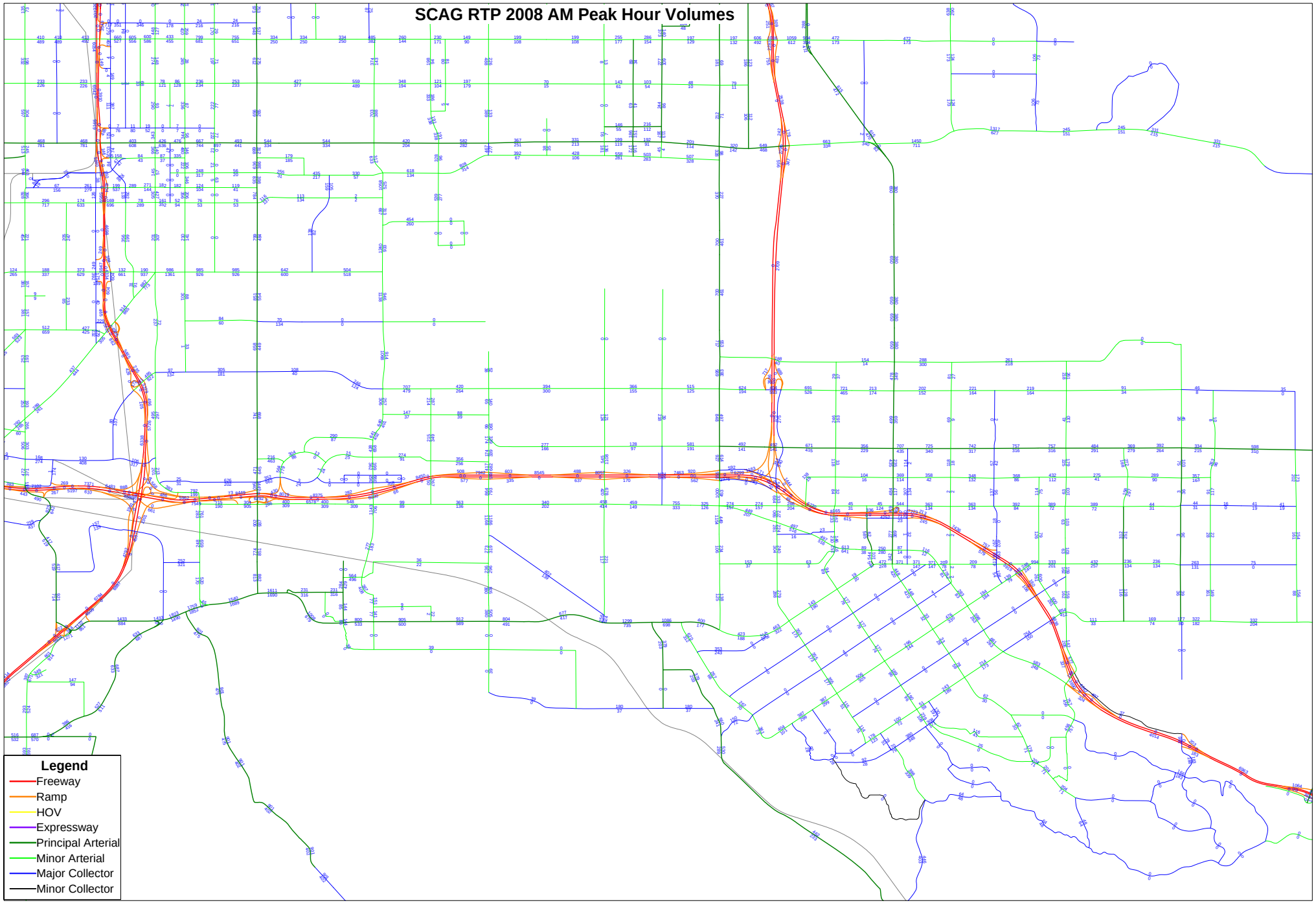

SCAG RTP 2008 PM (Autos) Peak Hour Volumes

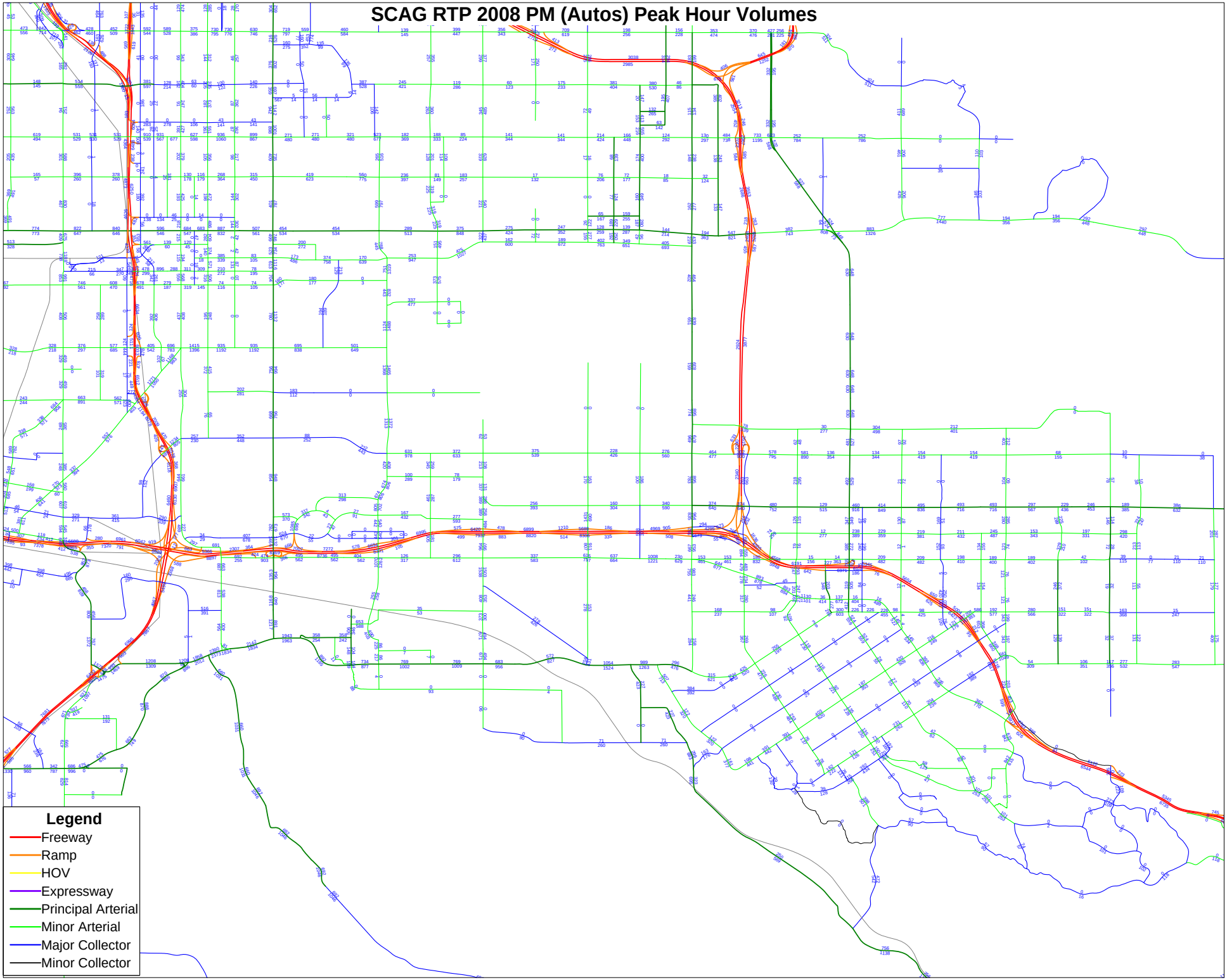

SCAG RTP 2008 PM Peak Hour Volumes

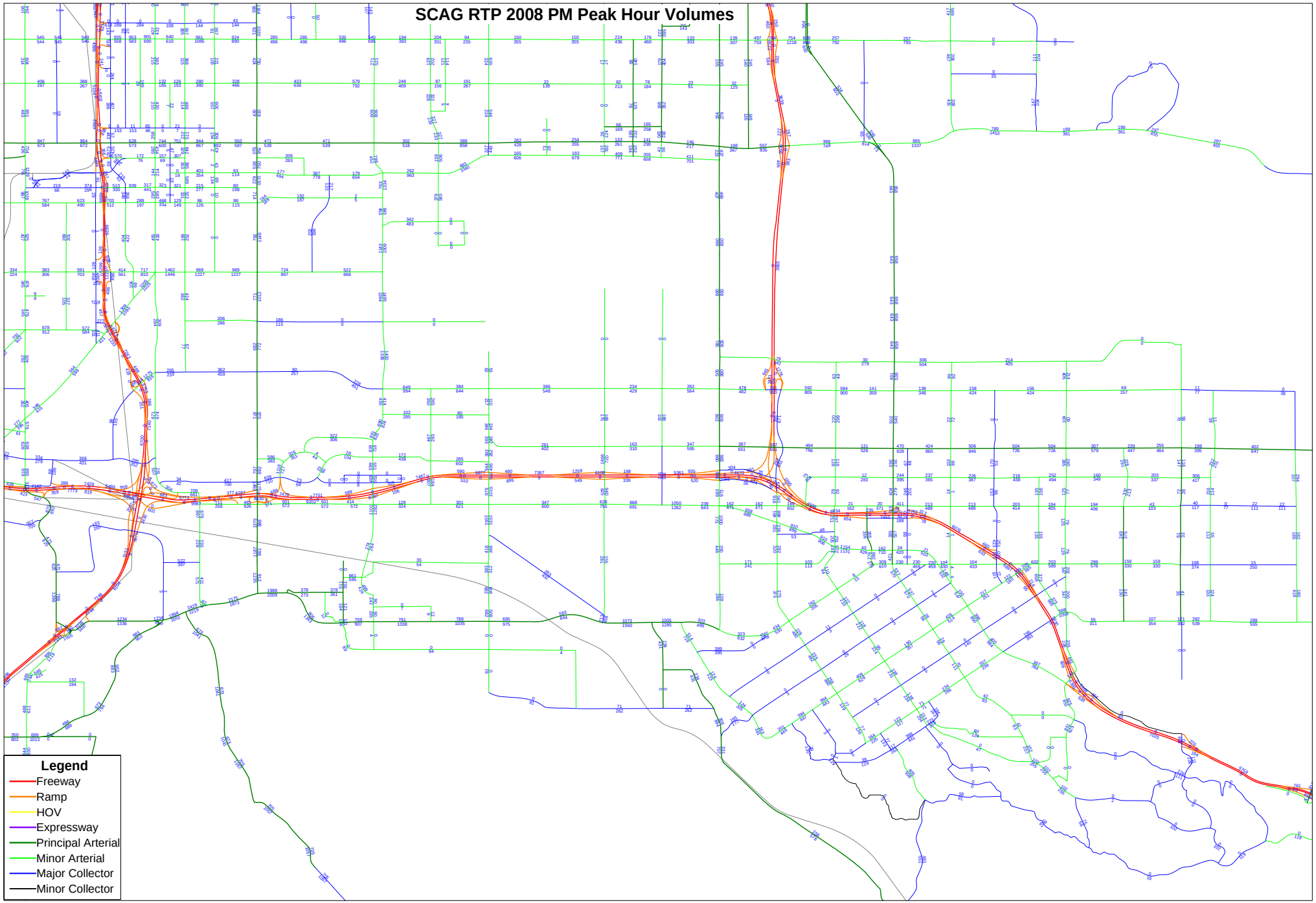

Redlands 2035 AM (Autos) Peak Hour Volumes

Redlands 2035 AM Peak Hour Volumes

Redlands 2035 PM (Autos) Peak Hour Volumes

Redlands 2035 PM Peak Hour Volumes

2035 NO PROJECT VOLUMES

2008 AM Peak Hour - AUTOS

NODE NUMBER	APPROACH				DEPARTURE				TOTAL	TOTAL
	NL	EL	SL	WL	NL	EL	SL	WL	IN	OUT
1. K St and 3rd St									0	0
2. K St and 2nd St				153					153	0
3. K St and Rialto Ave		163	236	702		618	195	280	1,101	1,093
4. J St and 3rd St				0				55	0	55
5. J St and 2nd St		233				253			233	253
6. J St and Rialto Ave				618				163	618	163
7. I St and 3rd St	320	30	27	5	0	31	208		382	239
8. I St and 2nd St	208	112	56	253	27	245	123	233	629	628
9. I St and Rialto Ave	123	158	0	618	56	681	0	163	899	900
10. I-215 SB Off Ramp and 3rd St (Future)									0	0
11. I-215 SB On Ramp and 2nd St	0	225	0	245	0	138	220	112	470	470
12. I-215 NB On Ramp and 3rd St (Future)	0	31	146	30	146	31	0	30	207	207
13. I-215 NB Ramps and 2nd St	0	163	582	138	146	511	0	225	883	882
14. H St/G St and 3rd St	83	29	24	31	24	31	82	30	167	167
15. G St and 2nd St	82	248	285	511	24	811	128	163	1,126	1,126
16. G St and Rialto Ave	128	72	193	681	285	281	349	158	1,074	1,073
17. G St and Congress St									0	0
18. Parking Lot Entrance and Congress St									0	0
19. E St and 2nd St	115	171	413	120	39	260	279	241	819	819
20. E St and Rialto Ave	279	150	300	281	413	340	186	72	1,010	1,011
21. E St and Parking Lot Entrance									0	0
22. Arrowhead Ave and Rialto Ave	340	66	138	91	192	44	204	51	635	491
23. H St and 5th St	514	379	70	760	0	585	693	445	1,723	1,723
24. F St and Rialto Ave									0	0
25. E St and 5th St	303	387	89	585	90	586	308	379	1,364	1,363
26. E St and 4th St	308	51	39	27	89	13	115	65	425	282
27. E St-Inland Center Dr and Mill St									0	0

2008 AM Peak Hour - TRUCKS

NODE NUMBER	APPROACH				DEPARTURE				TOTAL	TOTAL
	NL	EL	SL	WL	NL	EL	SL	WL	IN	OUT
1. K St and 3rd St									0	0
2. K St and 2nd St				3					3	0
3. K St and Rialto Ave		11	11	15		15	10	16	37	41
4. J St and 3rd St				0				20	0	20
5. J St and 2nd St		28				26			28	26
6. J St and Rialto Ave				15				11	15	11
7. I St and 3rd St	5	15	11		0	16	13		31	29
8. I St and 2nd St	13	16	1	26	11	15	3	28	56	57
9. I St and Rialto Ave	3	11	0	15	1	15	0	11	29	27
10. I-215 SB Off Ramp and 3rd St (Future)									0	0
11. I-215 SB On Ramp and 2nd St	0	38	0	15	0	18	16	16	53	50
12. I-215 NB On Ramp and 3rd St (Future)	0	0	4	0	4	0	0	0	4	4
13. I-215 NB Ramps and 2nd St	0	36	14	18	4	26	0	38	68	68
14. H St/G St and 3rd St	1	18	1	16	1	16	4	15	36	36
15. G St and 2nd St	4	41	7	26	1	36	5	36	78	78
16. G St and Rialto Ave	5	6	6	15	7	8	7	11	32	33
17. G St and Congress St									0	0
18. Parking Lot Entrance and Congress St									0	0
19. E St and 2nd St	30	11	14	24	18	5	26	30	79	79
20. E St and Rialto Ave	26	11	7	8	14	12	15	6	52	47
21. E St and Parking Lot Entrance									0	0
22. Arrowhead Ave and Rialto Ave	16	10	3	3	14	9	6	1	32	30
23. H St and 5th St	7	24	4	21	0	23	10	23	56	56
24. F St and Rialto Ave									0	0
25. E St and 5th St	40	39	51	23	22	50	58	24	153	154
26. E St and 4th St	58	36	18	16	51	24	30	19	128	124
27. E St-Inland Center Dr and Mill St									0	0

2035 AM Peak Hour - AUTOS								
	APPROACH				DEPARTURE			
NODE NUMBER	NL	EL	SL	WL	NL	EL	SL	WL
1. K St and 3rd St								
2. K St and 2nd St				252				
3. K St and Rialto Ave		182	240	741		605	228	255
4. J St and 3rd St				57				4
5. J St and 2nd St		279				435		
6. J St and Rialto Ave				605				182
7. I St and 3rd St	0	255	111		0	206	243	
8. I St and 2nd St	243	77	64	435	111	337	93	279
9. I St and Rialto Ave	93	141	0	605	64	591	2	182
10. I-215 SB Off Ramp and 3rd St	877	60	0	206	0	640	248	255
11. I-215 SB On Ramp and 2nd St	248	241	0	337	0	583	166	77
12. I-215 NB On Ramp and 3rd St	0	196	30	640	320	486	0	60
13. I-215 NB Off Ramp and 2nd St	0	257	458	583	30	1,026	0	241
14. H St/G St and 3rd St	330	28	144	486	9	544	239	196
15. G St and 2nd St	239	433	196	1,026	144	1,206	286	257
16. G St and Rialto Ave	286	99	232	591	196	452	417	141
17. G St and Congress St								
18. Parking Lot Entrance and Congress St								
19. E St and 2nd St	121	240	380	361	40	275	493	294
20. E St and Rialto Ave	493	218	257	452	380	681	262	99
21. E St and Parking Lot Entrance								
22. Arrowhead Ave and Rialto Ave	652	189	72	94	175	87	287	50
23. H St and 5th St	163	359	57	1,361	203	893	330	514
24. F St and Rialto Ave								
25. E St and 5th St	394	370	95	893	106	871	416	359
26. E St and 4th St	416	42	40	52	95	41	121	28
27. E St-Inland Center Dr and Mill St								

2035 AM Peak Hour - TRUCKS								
	APPROACH				DEPARTURE			
NODE NUMBER	NL	EL	SL	WL	NL	EL	SL	WL
1. K St and 3rd St								
2. K St and 2nd St				13				
3. K St and Rialto Ave		24	14	31		12	31	26
4. J St and 3rd St				2				19
5. J St and 2nd St		28				31		
6. J St and Rialto Ave				12				24
7. I St and 3rd St	0	19	15		0	23	15	
8. I St and 2nd St	15	21	1	31	15	16	8	28
9. I St and Rialto Ave	8	17	0	12	1	12	0	24
10. I-215 SB Off Ramp and 3rd St	16	15	0	23	0	30	5	19
11. I-215 SB On Ramp and 2nd St	5	42	0	16	0	25	16	21
12. I-215 NB On Ramp and 3rd St	0	26	3	30	20	24	0	15
13. I-215 NB Off Ramp and 2nd St	0	39	21	25	3	42	0	42
14. H St/G St and 3rd St	5	18	12	24	1	23	8	26
15. G St and 2nd St	8	61	106	42	12	49	18	39
16. G St and Rialto Ave	18	8	7	12	6	11	10	17
17. G St and Congress St								
18. Parking Lot Entrance and Congress St								
19. E St and 2nd St	81	19	84	33	82	8	85	42
20. E St and Rialto Ave	85	20	51	11	84	19	53	8
21. E St and Parking Lot Entrance								
22. Arrowhead Ave and Rialto Ave	19	12	2	3	17	10	7	2
23. H St and 5th St	5	29	2	49	20	35	5	29
24. F St and Rialto Ave								
25. E St and 5th St	96	44	116	35	87	65	109	29
26. E St and 4th St	109	36	82	16	116	34	81	18
27. E St-Inland Center Dr and Mill St								

AM Peak Hour DIFFERENCE (2035-2008) - AUTOS								
	APPROACH				DEPARTURE			
NODE NUMBER	NL	EL	SL	WL	NL	EL	SL	WL
1. K St and 3rd St	0	0	0	0	0	0	0	0
2. K St and 2nd St	0	0	0	99	0	0	0	0
3. K St and Rialto Ave	0	19	4	39	0	-13	33	-25
4. J St and 3rd St	0	0	0	57	0	0	0	-51
5. J St and 2nd St	0	46	0	0	0	182	0	0
6. J St and Rialto Ave	0	0	0	-13	0	0	0	19
7. I St and 3rd St	557	225	84	-5	0	175	35	0
8. I St and 2nd St	35	-35	8	182	84	92	-30	46
9. I St and Rialto Ave	-30	-17	0	-13	8	-90	2	19
10. I-215 SB Off Ramp and 3rd St	877	60	0	206	0	640	248	255
11. I-215 SB On Ramp and 2nd St	248	16	0	92	0	445	-54	-35
12. I-215 NB On Ramp and 3rd St	0	165	146	610	174	455	0	30
13. I-215 NB Off Ramp and 2nd St	0	94	-124	445	174	515	0	16
14. H St/G St and 3rd St	247	-1	120	455	-15	513	157	166
15. G St and 2nd St	157	185	-89	515	120	395	158	94
16. G St and Rialto Ave	158	27	39	-90	-89	171	68	-17
17. G St and Congress St	0	0	0	0	0	0	0	0
18. Parking Lot Entrance and Congress St	0	0	0	0	0	0	0	0
19. E St and 2nd St	6	69	0	241	1	15	214	53
20. E St and Rialto Ave	214	68	0	171	0	341	76	27
21. E St and Parking Lot Entrance	0	0	0	0	0	0	0	0
22. Arrowhead Ave and Rialto Ave	312	123	0	3	0	43	83	0
23. H St and 5th St	0	0	0	601	203	308	0	69
24. F St and Rialto Ave								
25. E St and 5th St	91	0	6	308	16	285	108	0
26. E St and 4th St	108	0	1	25	6	28	6	0
27. E St-Inland Center Dr and Mill St								

AM Peak Hour DIFFERENCE (2035-2008) - TRUCKS								
	APPROACH				DEPARTURE			
NODE NUMBER	NL	EL	SL	WL	NL	EL	SL	WL
1. K St and 3rd St	0	0	0	0	0	0	0	0
2. K St and 2nd St	0	0	0	10	0	0	0	0
3. K St and Rialto Ave	0	13	3	16	0	-3	21	10
4. J St and 3rd St	0	0	0	2	0	0	0	-1
5. J St and 2nd St	0	0	0	0	0	5	0	0
6. J St and Rialto Ave	0	0	0	-3	0	0	0	13
7. I St and 3rd St	-5	4	4	0	0	7	2	0
8. I St and 2nd St	2	5	0	5	4	1	5	0
9. I St and Rialto Ave	5	6	0	-3	0	-3	0	13
10. I-215 SB Off Ramp and 3rd St	16	15	0	23	0	30	5	19
11. I-215 SB On Ramp and 2nd St	5	4	0	1	0	7	0	5
12. I-215 NB On Ramp and 3rd St	0	26	-1	30	16	24	0	15
13. I-215 NB Off Ramp and 2nd St	0	3	7	7	-1	16	0	4
14. H St/G St and 3rd St	4	0	11	8	0	7	4	11
15. G St and 2nd St	4	20	99	16	11	13	13	3
16. G St and Rialto Ave	13	2	1	-3	-1	3	3	6
17. G St and Congress St	0	0	0	0	0	0	0	0
18. Parking Lot Entrance and Congress St	0	0	0	0	0	0	0	0
19. E St and 2nd St	51	8	70	9	64	3	59	12
20. E St and Rialto Ave	59	9	44	3	70	7	38	2
21. E St and Parking Lot Entrance	0	0	0	0	0	0	0	0
22. Arrowhead Ave and Rialto Ave	3	2	0	0	3	1	1	1
23. H St and 5th St	0	5	0	28	20	12	0	6
24. F St and Rialto Ave								
25. E St and 5th St	56	5	65	12	65	15	51	5
26. E St and 4th St	51	0	64	0	65	10	51	0
27. E St-Inland Center Dr and Mill St								

AM Peak Hour ADJUSTED DIFFERENCE (2035 to 2009) - AUTOS								0.888889
Adjust model numbers to year 2009/2011 by taking 96%/89% of the DIFFERENCE								0.962963
	APPROACH				DEPARTURE			
NODE NUMBER	NL	EL	SL	WL	NL	EL	SL	WL
1. K St and 3rd St	0	0	0	0	0	0	0	0
2. K St and 2nd St	0	0	0	95	0	0	0	0
3. K St and Rialto Ave	0	18	4	38	0	-13	32	-24
4. J St and 3rd St	0	0	0	55	0	0	0	-49
5. J St and 2nd St	0	44	0	0	0	175	0	0
6. J St and Rialto Ave	0	0	0	-13	0	0	0	18
7. I St and 3rd St	536	217	81	-5	0	169	34	0
8. I St and 2nd St	34	-34	8	175	81	89	-29	44
9. I St and Rialto Ave	-29	-16	0	-13	8	-87	2	18
10. I-215 SB Off Ramp and 3rd St	845	58	0	198	0	616	239	246
11. I-215 SB On Ramp and 2nd St	239	15	0	89	0	429	-52	-34
12. I-215 NB On Ramp and 3rd St	0	159	141	587	168	438	0	29
13. I-215 NB Off Ramp and 2nd St	0	91	-119	429	168	496	0	15
14. H St/G St and 3rd St	238	-1	116	438	-14	494	151	160
15. G St and 2nd St	151	178	-86	496	116	380	152	91
16. G St and Rialto Ave	152	26	38	-87	-86	165	65	-16
17. G St and Congress St	0	0	0	0	0	0	0	0
18. Parking Lot Entrance and Congress St	0	0	0	0	0	0	0	0
19. E St and 2nd St	5	61	0	214	1	13	190	47
20. E St and Rialto Ave	190	60	0	152	0	303	68	24
21. E St and Parking Lot Entrance	0	0	0	0	0	0	0	0
22. Arrowhead Ave and Rialto Ave	277	109	0	3	0	38	74	0
23. H St and 5th St	0	0	0	534	180	274	0	61
24. F St and Rialto Ave	0	0	0	0	0	0	0	0
25. E St and 5th St	81	0	5	274	14	253	96	0
26. E St and 4th St	96	0	1	22	5	25	5	0
27. E St-Inland Center Dr and Mill St								

AM Peak Hour ADJUSTED DIFFERENCE (2035 to 2009) - TRUCKS								0.888889
Adjust model numbers to year 2009/2011 by taking 96%/89% of the DIFFERENCE								0.962963
	APPROACH				DEPARTURE			
NODE NUMBER	NL	EL	SL	WL	NL	EL	SL	WL
1. K St and 3rd St	0	0	0	0	0	0	0	0
2. K St and 2nd St	0	0	0	10	0	0	0	0
3. K St and Rialto Ave	0	13	3	15	0	-3	20	10
4. J St and 3rd St	0	0	0	2	0	0	0	-1
5. J St and 2nd St	0	0	0	0	0	5	0	0
6. J St and Rialto Ave	0	0	0	-3	0	0	0	13
7. I St and 3rd St	-5	4	4	0	0	7	2	0
8. I St and 2nd St	2	5	0	5	4	1	5	0
9. I St and Rialto Ave	5	6	0	-3	0	-3	0	13
10. I-215 SB Off Ramp and 3rd St	15	14	0	22	0	29	5	18
11. I-215 SB On Ramp and 2nd St	5	4	0	1	0	7	0	5
12. I-215 NB On Ramp and 3rd St	0	25	-1	29	15	23	0	14
13. I-215 NB Off Ramp and 2nd St	0	3	7	7	-1	15	0	4
14. H St/G St and 3rd St	4	0	11	8	0	7	4	11
15. G St and 2nd St	4	19	95	15	11	13	13	3
16. G St and Rialto Ave	13	2	1	-3	-1	3	3	6
17. G St and Congress St	0	0	0	0	0	0	0	0
18. Parking Lot Entrance and Congress St	0	0	0	0	0	0	0	0
19. E St and 2nd St	45	7	62	8	57	3	52	11
20. E St and Rialto Ave	52	8	39	3	62	6	34	2
21. E St and Parking Lot Entrance	0	0	0	0	0	0	0	0
22. Arrowhead Ave and Rialto Ave	3	2	0	0	3	1	1	1
23. H St and 5th St	0	4	0	25	18	11	0	5
24. F St and Rialto Ave	0	0	0	0	0	0	0	0
25. E St and 5th St	50	4	58	11	58	13	45	4
26. E St and 4th St	45	0	57	0	58	9	45	0
27. E St-Inland Center Dr and Mill St								

INTERSECTION	AM 2009/2011 TURNING MOVEMENT COUNTS - AUTOS												AM LINK VOLUMES - AUTOS							
	NORTHBOUND			EASTBOUND			SOUTHBOUND			WESTBOUND			APPROACH				DEPARTURE			
	L	T	R	L	T	R	L	T	R	L	T	R	NL	EL	SL	WL	NL	EL	SL	WL
1. K St and 3rd St	7	8	12	1	45	1	4	0	0	28	63	1	4	91	27	47	10	61	29	69
2. K St and 2nd St	14	3	36	7	228	11	7	22	10	34	113	19	39	166	53	246	29	271	67	138
3. K St and Rialto Ave	33	19	113	10	385	32	3	27	21	105	173	1	51	279	165	428	30	501	165	227
4. J St and 3rd St	4	0	5	0	61	0	0	0	0	4	99	0	0	103	9	61	0	66	4	103
5. J St and 2nd St	2	5	49	0	365	5	3	1	0	8	176	7	4	191	56	370	12	417	14	178
6. J St and Rialto Ave	0	6	2	41	456	2	4	4	4	29	228	6	12	263	8	499	53	462	35	232
7. I St and 3rd St	10	0	29	0	44	4	149	368	54	33	40	0	571	73	39	48	0	222	405	104
8. I St and 2nd St	4	15	119	5	290	4	105	258	16	34	150	11	380	196	138	298	31	514	296	170
9. I St and Rialto Ave	8	60	61	79	395	18	114	115	90	37	195	15	318	247	128	491	153	569	169	292
10. I-215 SB Off Ramp and 3rd St	0	0	0	0	0	0	0	0	0	0	0	0	0	0	0	0	0	0	0	0
11. I-215 SB On Ramp and 2nd St	0	0	0	0	397	152	0	0	0	187	207	0	0	394	0	549	0	397	339	207
12. I-215 NB On Ramp and 3rd St	0	0	0	0	0	0	0	0	0	0	0	0	0	0	0	0	0	0	0	0
13. I-215 NB Off Ramp and 2nd St	171	0	1021	218	185	0	0	0	0	0	257	162	0	419	1,192	403	0	1,207	0	428
14. H St/G St and 3rd St	20	64	65	24	109	62	6	163	35	31	34	8	204	73	149	195	96	180	256	89
15. G St and 2nd St	85	72	27	98	910	98	79	122	37	24	246	29	238	299	183	1,106	198	1,016	244	368
16. G St and Rialto Ave	12	45	20	46	427	28	72	72	42	32	221	57	186	309	76	502	148	519	131	275
17. G St and Congress St	0	92	0	5	0	3	0	185	3	0	0	0	188	0	92	7	96	0	188	3
18. Parking Lot Entrance and Congress St	0	0	0	0	0	0	0	0	0	0	0	0	0	0	0	0	0	0	0	0
19. E St and 2nd St	33	126	55	184	782	36	37	279	76	30	331	16	392	376	214	1,002	325	874	345	440
20. E St and Rialto Ave	33	168	44	23	359	69	21	171	19	20	203	16	211	239	246	450	207	424	260	255
21. E St and Parking Lot Entrance	0	0	0	0	0	0	0	0	0	0	0	0	0	0	0	0	0	0	0	0
22. Arrowhead Ave and Rialto Ave	28	205	22	59	246	57	10	197	29	31	201	10	236	242	255	362	274	278	285	258
23. H St and 5th St	120	108	34	27	778	304	25	177	48	27	263	8	249	297	262	1,109	142	837	508	430
24. F St and Rialto Ave	0	0	0	32	322	0	19	0	24	0	208	30	44	237	0	354	62	341	0	232
25. E St and 5th St	38	143	50	29	623	69	50	225	23	43	251	18	298	312	231	721	190	723	337	312
26. E St and 4th St	22	238	99	5	64	32	12	327	19	12	31	11	358	54	359	101	254	175	371	72
27. E St-Inland Center Dr and Mill St																				
																12,574				12,195

INTERSECTION	AM 2009/2011 TURNING MOVEMENT COUNTS - TRUCKS												AM LINK VOLUMES - TRUCKS							
	NORTHBOUND			EASTBOUND			SOUTHBOUND			WESTBOUND			APPROACH				DEPARTURE			
	L	T	R	L	T	R	L	T	R	L	T	R	NL	EL	SL	WL	NL	EL	SL	WL
1. K St and 3rd St	0	0	1	0	2	0	0	0	0	1	3	0	0	5	1	2	0	3	1	4
2. K St and 2nd St	1	0	2	0	12	1	0	1	1	2	6	1	2	9	3	13	1	14	4	7
3. K St and Rialto Ave	2	1	6	1	22	2	0	2	1	6	10	0	3	16	9	24	2	28	9	13
4. J St and 3rd St	0	0	0	0	3	0	0	0	0	0	5	0	0	5	0	3	0	3	0	5
5. J St and 2nd St	0	0	4	2	17	0	0	0	0	0	7	1	0	8	4	19	3	21	0	7
6. J St and Rialto Ave	0	0	0	5	25	0	0	0	0	1	10	1	0	12	0	30	6	25	1	10
7. I St and 3rd St	0	0	2	0	2	0	8	19	3	2	2	0	30	4	2	2	0	12	21	5
8. I St and 2nd St	0	1	6	0	15	0	6	14	1	2	8	1	20	10	7	16	2	27	16	9
9. I St and Rialto Ave	0	3	3	4	22	1	6	6	5	2	11	1	18	14	7	28	9	32	10	17
10. I-215 SB Off Ramp and 3rd St	0	0	0	0	0	0	0	0	0	0	0	0	0	0	0	0	0	0	0	0
11. I-215 SB On Ramp and 2nd St	0	0	0	0	21	8	0	0	0	10	11	0	0	21	0	29	0	21	18	11
12. I-215 NB On Ramp and 3rd St	0	0	0	0	0	0	0	0	0	0	0	0	0	0	0	0	0	0	0	0
13. I-215 NB Off Ramp and 2nd St	9	0	54	11	10	0	0	0	0	0	14	8	0	22	63	21	20	63	0	23
14. H St/G St and 3rd St	0	9	3	4	3	6	2	6	5	5	1	0	13	6	12	13	13	8	17	6
15. G St and 2nd St	6	5	2	7	69	8	6	9	3	2	19	2	18	23	14	84	15	77	19	28
16. G St and Rialto Ave	1	3	1	4	33	2	6	5	3	2	17	4	14	24	6	38	11	40	10	21
17. G St and Congress St	0	7	0	0	0	0	0	15	0	0	0	0	15	0	7	1	8	0	15	0
18. Parking Lot Entrance and Congress St	0	0	0	0	0	0	0	0	0	0	0	0	0	0	0	0	0	0	0	0
19. E St and 2nd St	3	10	4	14	62	3	3	22	6	2	26	1	31	30	17	79	26	69	27	35
20. E St and Rialto Ave	3	13	4	2	28	5	2	14	1	2	16	1	17	19	19	36	16	34	21	20
21. E St and Parking Lot Entrance	0	0	0	0	0	0	0	0	0	0	0	0	0	0	0	0	0	0	0	0
22. Arrowhead Ave and Rialto Ave	2	16	2	5	19	5	1	16	2	2	16	1	19	19	20	29	22	22	23	20
23. H St and 5th St	6	5	2	1	40	16	1	9	2	1	13	0	13	15	13	57	7	43	26	22
24. F St and Rialto Ave	0	0	0	3	25	0	2	0	2	0	16	2	3	19	0	28	5	27	0	18
25. E St and 5th St	0	3	0	3	31	2	0	8	0	1	28	0	8	29	3	36	6	31	11	28
26. E St and 4th St	1	4	0	0	2	0	0	10	1	1	1	0	11	2	5	2	4	2	11	3
27. E St-Inland Center Dr and Mill St																				

2035 AM Peak Hour REFINED VOLUMES - AUTOS
2009/2011 VOLUME+ADJUSTED DIFFERENCE

NODE NUMBER	APPROACH				DEPARTURE			
	NL	EL	SL	WL	NL	EL	SL	WL
1. K St and 3rd St	4	91	27	47	10	61	29	69
2. K St and 2nd St	39	166	53	341	29	271	67	138
3. K St and Rialto Ave	51	297	169	465	30	501	196	227
4. J St and 3rd St	0	103	9	116	0	66	4	103
5. J St and 2nd St	4	235	56	370	12	592	14	178
6. J St and Rialto Ave	12	263	8	499	53	462	35	250
7. I St and 3rd St	1,107	290	120	43	0	391	438	104
8. I St and 2nd St	414	196	145	474	112	603	296	214
9. I St and Rialto Ave	289	247	128	491	161	569	171	311
10. I-215 SB Off Ramp and 3rd St	845	58	0	198	0	616	239	246
11. I-215 SB On Ramp and 2nd St	239	410	0	638	0	826	287	173
12. I-215 NB On Ramp and 3rd St	0	159	141	587	168	438	0	29
13. I-215 NB Off Ramp and 2nd St	0	510	1,073	831	168	1,703	0	444
14. H St/G St and 3rd St	442	73	265	633	96	674	407	249
15. G St and 2nd St	389	477	183	1,602	313	1,396	397	458
16. G St and Rialto Ave	338	335	114	502	148	684	196	275
17. G St and Congress St	223	0	109	9	115	0	223	4
18. Parking Lot Entrance and Congress St	0	0	0	0	0	0	0	0
19. E St and 2nd St	397	438	214	1,216	326	887	535	487
20. E St and Rialto Ave	402	300	246	602	207	728	328	279
21. E St and Parking Lot Entrance	0	0	0	0	0	0	0	0
22. Arrowhead Ave and Rialto Ave	514	351	255	365	274	316	359	258
23. H St and 5th St	249	297	262	1,643	322	1,111	508	491
24. F St and Rialto Ave	52	281	0	420	74	404	0	275
25. E St and 5th St	379	312	236	995	204	976	433	312
26. E St and 4th St	454	54	360	123	259	200	376	72
27. E St-Inland Center Dr and Mill St								

2035 AM Peak Hour REFINED VOLUMES - TRUCKS
2009/2011 VOLUME+ADJUSTED DIFFERENCE

NODE NUMBER	APPROACH				DEPARTURE			
	NL	EL	SL	WL	NL	EL	SL	WL
1. K St and 3rd St	0	5	1	2	0	3	1	4
2. K St and 2nd St	2	9	3	23	1	14	4	7
3. K St and Rialto Ave	3	28	12	40	2	28	30	23
4. J St and 3rd St	0	5	0	5	0	3	0	5
5. J St and 2nd St	0	8	4	19	3	26	0	7
6. J St and Rialto Ave	0	12	0	30	6	25	1	23
7. I St and 3rd St	25	8	6	2	0	18	23	5
8. I St and 2nd St	22	15	7	20	5	28	20	9
9. I St and Rialto Ave	23	20	7	28	9	32	10	29
10. I-215 SB Off Ramp and 3rd St	15	14	0	22	0	29	5	18
11. I-215 SB On Ramp and 2nd St	5	25	0	30	0	28	18	16
12. I-215 NB On Ramp and 3rd St	0	25	-1	29	15	23	0	14
13. I-215 NB Off Ramp and 2nd St	0	25	69	28	19	79	0	26
14. H St/G St and 3rd St	17	6	23	21	13	15	21	17
15. G St and 2nd St	22	42	109	100	26	90	31	31
16. G St and Rialto Ave	27	26	7	38	11	42	13	27
17. G St and Congress St	18	0	9	1	9	0	18	1
18. Parking Lot Entrance and Congress St	0	0	0	0	0	0	0	0
19. E St and 2nd St	76	37	79	87	83	72	80	45
20. E St and Rialto Ave	69	27	59	38	79	40	54	22
21. E St and Parking Lot Entrance	0	0	0	0	0	0	0	0
22. Arrowhead Ave and Rialto Ave	21	21	20	29	24	23	23	21
23. H St and 5th St	13	20	13	82	25	53	26	27
24. F St and Rialto Ave	5	23	0	33	6	32	0	22
25. E St and 5th St	58	33	61	47	64	44	56	32
26. E St and 4th St	56	2	62	2	62	11	56	3
27. E St-Inland Center Dr and Mill St								

POST-PROCESS THESE NUMBERS

2035 AM FINAL LINK VOLUMES - TOTAL

AUTOS

INTERSECTION	NB IN	NB OUT	SB IN	SB OUT	EB IN	EB OUT	WB IN	WB OUT
1. K St and 3rd St	35	38	4	10	61	91	120	80
2. K St and 2nd St	70	90	51	39	341	184	219	362
3. K St and Rialto Ave	169	203	67	41	465	235	297	519
4. J St and 3rd St	11	7	0	0	116	139	135	116
5. J St and 2nd St	80	18	6	16	399	178	271	549
6. J St and Rialto Ave	12	46	18	70	553	250	384	608
7. I St and 3rd St	120	714	1,107	0	63	222	290	643
8. I St and 2nd St	145	296	414	112	474	214	196	603
9. I St and Rialto Ave	131	171	297	161	502	311	253	569
10. I-215 SB Off Ramp and 3rd St	0	239	845	0	198	246	58	616
11. I-215 SB On Ramp and 2nd St	0	287	239	0	638	173	410	826
12. I-215 NB On Ramp and 3rd St	141	0	0	168	587	29	159	438
13. I-215 NB Off Ramp and 2nd St	1,196	0	0	168	929	444	568	1,703
14. H St/G St and 3rd St	265	407	442	96	633	249	73	674
15. G St and 2nd St	183	411	389	323	1,602	474	477	1,443
16. G St and Rialto Ave	114	196	338	148	502	275	335	684
17. G St and Congress St	109	223	223	115	9	4	0	0
18. Parking Lot Entrance and Congress St	0	0	0	0	0	0	0	0
19. E St and 2nd St	214	535	397	326	1,216	487	438	887
20. E St and Rialto Ave	246	328	402	207	602	279	300	728
21. E St and Parking Lot Entrance	0	0	0	0	0	0	0	0
22. Arrowhead Ave and Rialto Ave	255	359	514	274	365	258	351	316
23. H St and 5th St	262	508	249	322	1,643	491	297	1,111
24. F St and Rialto Ave	0	0	52	74	420	275	281	404
25. E St and 5th St	236	433	379	204	995	312	312	976
26. E St and 4th St	360	376	454	259	123	72	54	200
27. E St-Inland Center Dr and Mill St								

2035 AM FINAL LINK VOLUMES - TOTAL

TRUCKS

INTERSECTION	NB IN	NB OUT	SB IN	SB OUT	EB IN	EB OUT	WB IN	WB OUT
1. K St and 3rd St	2	2	0	0	3	5	6	4
2. K St and 2nd St	4	5	3	2	23	10	11	19
3. K St and Rialto Ave	12	30	4	2	40	23	28	28
4. J St and 3rd St	1	0	0	0	5	5	7	5
5. J St and 2nd St	5	0	0	4	19	7	11	28
6. J St and Rialto Ave	0	1	0	8	42	23	24	33
7. I St and 3rd St	6	23	25	0	3	7	8	18
8. I St and 2nd St	7	20	22	5	20	9	15	28
9. I St and Rialto Ave	7	10	23	9	28	29	20	32
10. I-215 SB Off Ramp and 3rd St	0	5	15	0	22	18	14	29
11. I-215 SB On Ramp and 2nd St	0	18	5	0	30	16	25	28
12. I-215 NB On Ramp and 3rd St	0	0	0	15	29	14	25	23
13. I-215 NB Off Ramp and 2nd St	69	0	0	19	28	26	25	79
14. H St/G St and 3rd St	23	21	17	13	21	17	6	15
15. G St and 2nd St	109	46	22	38	100	48	42	141
16. G St and Rialto Ave	7	13	27	11	38	27	26	42
17. G St and Congress St	9	18	18	9	1	1	0	0
18. Parking Lot Entrance and Congress St	0	0	0	0	0	0	0	0
19. E St and 2nd St	79	80	76	83	87	45	37	72
20. E St and Rialto Ave	59	54	69	79	38	22	27	40
21. E St and Parking Lot Entrance	0	0	0	0	0	0	0	0
22. Arrowhead Ave and Rialto Ave	20	23	21	24	29	21	21	23
23. H St and 5th St	13	26	13	25	82	27	20	53
24. F St and Rialto Ave	0	0	5	6	33	22	23	32
25. E St and 5th St	61	56	58	64	47	32	33	44
26. E St and 4th St	62	56	56	62	2	3	2	11
27. E St-Inland Center Dr and Mill St								

2035 AM FINAL LINK VOLUMES - TOTAL
TOTAL PCE

INTERSECTION	NB IN	NB OUT	SB IN	SB OUT	EB IN	EB OUT	WB IN	WB OUT
1. K St and 3rd St	39	42	4	11	68	101	133	89
2. K St and 2nd St	78	100	57	43	389	205	243	402
3. K St and Rialto Ave	195	266	75	46	550	283	358	579
4. J St and 3rd St	13	8	0	0	127	150	150	126
5. J St and 2nd St	91	18	6	24	439	193	294	608
6. J St and Rialto Ave	12	49	18	87	642	298	435	678
7. I St and 3rd St	133	764	1,161	0	69	238	306	682
8. I St and 2nd St	161	340	460	124	517	233	228	662
9. I St and Rialto Ave	146	192	346	180	561	373	295	637
10. I-215 SB Off Ramp and 3rd St	0	249	877	0	246	284	89	678
11. I-215 SB On Ramp and 2nd St	0	325	249	0	701	207	462	884
12. I-215 NB On Ramp and 3rd St	141	0	0	200	649	60	212	487
13. I-215 NB Off Ramp and 2nd St	1,344	0	0	208	989	500	621	1,870
14. H St/G St and 3rd St	313	452	478	124	677	284	86	705
15. G St and 2nd St	416	509	436	404	1,814	576	567	1,743
16. G St and Rialto Ave	128	224	395	172	583	332	390	774
17. G St and Congress St	127	259	259	133	11	6	0	0
18. Parking Lot Entrance and Congress St	0	0	0	0	0	0	0	0
19. E St and 2nd St	374	696	551	493	1,392	579	512	1,032
20. E St and Rialto Ave	364	438	541	365	680	323	354	808
21. E St and Parking Lot Entrance	0	0	0	0	0	0	0	0
22. Arrowhead Ave and Rialto Ave	296	407	557	323	423	301	393	362
23. H St and 5th St	286	555	272	367	1,790	540	332	1,207
24. F St and Rialto Ave	0	0	61	85	479	315	322	461
25. E St and 5th St	345	534	483	319	1,079	370	372	1,056
26. E St and 4th St	471	477	555	370	127	77	58	219
27. E St-Inland Center Dr and Mill St								

2035 AM FINAL LINK VOLUMES - TOTAL
TOTAL TRUCK PCE

INTERSECTION	NB IN	NB OUT	SB IN	SB OUT	EB IN	EB OUT	WB IN	WB OUT
1. K St and 3rd St	4	4	0	1	7	10	13	9
2. K St and 2nd St	8	10	6	4	48	20	24	40
3. K St and Rialto Ave	26	63	8	5	84	48	60	60
4. J St and 3rd St	1	1	0	0	11	11	15	10
5. J St and 2nd St	11	0	0	8	40	15	22	59
6. J St and Rialto Ave	0	3	0	17	89	48	51	70
7. I St and 3rd St	13	49	54	0	7	15	16	39
8. I St and 2nd St	15	43	47	12	44	19	32	60
9. I St and Rialto Ave	15	20	49	19	59	62	42	69
10. I-215 SB Off Ramp and 3rd St	0	10	33	0	47	39	31	61
11. I-215 SB On Ramp and 2nd St	0	38	10	0	63	33	52	59
12. I-215 NB On Ramp and 3rd St	0	0	0	33	61	31	53	49
13. I-215 NB Off Ramp and 2nd St	148	0	0	40	59	56	53	168
14. H St/G St and 3rd St	48	44	36	28	44	35	13	31
15. G St and 2nd St	233	98	47	80	212	102	90	300
16. G St and Rialto Ave	14	27	57	24	81	57	54	90
17. G St and Congress St	18	36	36	18	2	2	0	0
18. Parking Lot Entrance and Congress St	0	0	0	0	0	0	0	0
19. E St and 2nd St	160	161	154	167	176	92	74	145
20. E St and Rialto Ave	118	110	140	159	77	44	54	80
21. E St and Parking Lot Entrance	0	0	0	0	0	0	0	0
22. Arrowhead Ave and Rialto Ave	41	47	43	49	58	43	42	46
23. H St and 5th St	24	47	23	45	147	49	35	96
24. F St and Rialto Ave	0	0	9	11	59	40	41	57
25. E St and 5th St	109	101	104	115	84	58	60	80
26. E St and 4th St	111	101	101	111	4	5	4	20
27. E St-Inland Center Dr and Mill St								

2008 PM Peak Hour - AUTOS

NODE NUMBER	APPROACH				DEPARTURE				TOTAL IN	TOTAL OUT
	NL	EL	SL	WL	NL	EL	SL	WL		
1. K St and 3rd St									0	0
2. K St and 2nd St				66					66	0
3. K St and Rialto Ave		608	289	561		470	258	746	1,458	1,474
4. J St and 3rd St				13				121	13	121
5. J St and 2nd St		347				270			347	270
6. J St and Rialto Ave				470				608	470	608
7. I St and 3rd St	287	57	54		0	68	167		398	235
8. I St and 2nd St	167	163	111	270	54	249	60	347	711	710
9. I St and Rialto Ave	60	678	1	470	111	491	0	608	1,209	1,210
10. I-215 SB Off Ramp and 3rd St (Future)									0	0
11. I-215 SB On Ramp and 2nd St	0	623	0	249	0	191	519	163	872	873
12. I-215 NB On Ramp and 3rd St (Future)	0	57	0	68	0	57	0	68	125	125
13. I-215 NB Ramps and 2nd St	0	478	399	191	0	299	0	623	1,068	922
14. H St/G St and 3rd St	58	55	212	68	220	60	58	57	393	395
15. G St and 2nd St	58	896	261	299	212	482	342	478	1,514	1,514
16. G St and Rialto Ave	342	279	406	491	261	187	392	678	1,518	1,518
17. G St and Congress St									0	0
18. Parking Lot Entrance and Congress St									0	0
19. E St and 2nd St	115	311	568	413	194	369	556	288	1,407	1,407
20. E St and Rialto Ave	556	452	408	187	568	319	437	279	1,603	1,603
21. E St and Parking Lot Entrance									0	0
22. Arrowhead Ave and Rialto Ave	316	74	248	145	506	116	195	124	783	941
23. H St and 5th St	434	596	419	646	56	546	653	840	2,095	2,095
24. F St and Rialto Ave									0	0
25. E St and 5th St	218	684	382	546	472	547	215	596	1,830	1,830
26. E St and 4th St	215	120	194	60	382	45	115	139	589	681
27. E St-Inland Center Dr and Mill St									0	0

2008 PM Peak Hour - TRUCKS

NODE NUMBER	APPROACH				DEPARTURE				TOTAL IN	TOTAL OUT
	NL	EL	SL	WL	NL	EL	SL	WL		
1. K St and 3rd St									0	0
2. K St and 2nd St				2					2	0
3. K St and Rialto Ave		15	12	23		20	11	21	50	52
4. J St and 3rd St				1				21	1	21
5. J St and 2nd St		27				26			27	26
6. J St and Rialto Ave				20				15	20	15
7. I St and 3rd St	65	28	37		0	17	14		130	31
8. I St and 2nd St	14	31	10	26	37	16	2	27	81	82
9. I St and Rialto Ave	2	25	0	20	10	21	0	15	47	46
10. I-215 SB Off Ramp and 3rd St (Future)									0	0
11. I-215 SB On Ramp and 2nd St	0	56	0	16	0	19	18	31	72	68
12. I-215 NB On Ramp and 3rd St (Future)	0	0	147	0	147	0	0	0	147	147
13. I-215 NB Ramps and 2nd St	0	35	34	19	147	31	0	56	88	234
14. H St/G St and 3rd St	1	33	3	17	4	16	4	28	54	52
15. G St and 2nd St	4	43	7	31	3	40	7	35	85	85
16. G St and Rialto Ave	7	10	16	21	7	10	12	25	54	54
17. G St and Congress St									0	0
18. Parking Lot Entrance and Congress St									0	0
19. E St and 2nd St	29	12	15	28	20	8	26	29	84	83
20. E St and Rialto Ave	26	16	10	10	15	15	18	10	62	58
21. E St and Parking Lot Entrance									0	0
22. Arrowhead Ave and Rialto Ave	15	12	4	4	16	10	4	5	35	35
23. H St and 5th St	9	32	6	26	1	27	20	24	73	72
24. F St and Rialto Ave									0	0
25. E St and 5th St	40	60	52	27	24	53	70	32	179	179
26. E St and 4th St	70	37	20	16	52	24	29	33	143	138
27. E St-Inland Center Dr and Mill St									0	0

2035 PM Peak Hour - AUTOS								
	APPROACH				DEPARTURE			
NODE NUMBER	NL	EL	SL	WL	NL	EL	SL	WL
1. K St and 3rd St								
2. K St and 2nd St				64				
3. K St and Rialto Ave		687	334	489		453	330	836
4. J St and 3rd St				43				32
5. J St and 2nd St		590				354		
6. J St and Rialto Ave				453				687
7. I St and 3rd St	0	246	257		0	325	161	
8. I St and 2nd St	161	368	338	354	257	189	185	590
9. I St and Rialto Ave	185	754	16	453	338	377	6	687
10. I-215 SB Off Ramp and 3rd St	476	83	0	325	0	470	169	246
11. I-215 SB On Ramp and 2nd St	169	996	0	189	0	357	629	368
12. I-215 NB On Ramp and 3rd St	0	656	157	470	921	279	0	83
13. I-215 NB Off Ramp and 2nd St	0	1,107	422	357	157	732	0	996
14. H St/G St and 3rd St	112	405	386	279	196	186	145	656
15. G St and 2nd St	145	1,315	405	732	386	809	295	1,107
16. G St and Rialto Ave	295	584	572	377	405	313	356	754
17. G St and Congress St								
18. Parking Lot Entrance and Congress St								
19. E St and 2nd St	105	624	613	522	172	495	563	633
20. E St and Rialto Ave	563	832	421	313	613	451	481	584
21. E St and Parking Lot Entrance								
22. Arrowhead Ave and Rialto Ave	311	228	399	140	717	361	164	212
23. H St and 5th St	233	827	534	1,127	514	710	112	1,383
24. F St and Rialto Ave								
25. E St and 5th St	225	864	445	710	492	704	221	827
26. E St and 4th St	221	127	172	78	445	91	105	149
27. E St-Inland Center Dr and Mill St								

2035 PM Peak Hour - TRUCKS								
	APPROACH				DEPARTURE			
NODE NUMBER	NL	EL	SL	WL	NL	EL	SL	WL
1. K St and 3rd St								
2. K St and 2nd St				2				
3. K St and Rialto Ave		23	16	19		17	16	25
4. J St and 3rd St				1				20
5. J St and 2nd St		36				30		
6. J St and Rialto Ave				17				23
7. I St and 3rd St	0	22	15		0	22	15	
8. I St and 2nd St	15	21	8	30	15	17	5	36
9. I St and Rialto Ave	5	23	0	17	8	15	1	23
10. I-215 SB Off Ramp and 3rd St	24	15	0	22	0	29	9	22
11. I-215 SB On Ramp and 2nd St	9	47	0	17	0	31	21	21
12. I-215 NB On Ramp and 3rd St	0	28	5	29	21	25	0	15
13. I-215 NB Off Ramp and 2nd St	0	47	26	31	5	53	0	47
14. H St/G St and 3rd St	6	25	9	25	3	21	12	28
15. G St and 2nd St	12	61	11	53	9	56	26	47
16. G St and Rialto Ave	26	14	14	15	11	18	13	23
17. G St and Congress St								
18. Parking Lot Entrance and Congress St								
19. E St and 2nd St	80	26	81	36	83	13	82	46
20. E St and Rialto Ave	82	22	53	18	81	24	55	14
21. E St and Parking Lot Entrance								
22. Arrowhead Ave and Rialto Ave	15	14	6	5	17	15	4	5
23. H St and 5th St	9	35	8	59	26	40	6	44
24. F St and Rialto Ave								
25. E St and 5th St	94	51	115	40	87	69	108	35
26. E St and 4th St	108	37	83	17	115	35	80	20
27. E St-Inland Center Dr and Mill St								

PM Peak Hour DIFFERENCE (2035-2008) - AUTOS								
	APPROACH				DEPARTURE			
NODE NUMBER	NL	EL	SL	WL	NL	EL	SL	WL
1. K St and 3rd St	0	0	0	0	0	0	0	0
2. K St and 2nd St	0	0	0	-2	0	0	0	0
3. K St and Rialto Ave	0	79	45	-72	0	-17	72	90
4. J St and 3rd St	0	0	0	30	0	0	0	-89
5. J St and 2nd St	0	243	0	0	0	84	0	0
6. J St and Rialto Ave	0	0	0	-17	0	0	0	79
7. I St and 3rd St	-287	189	203	0	0	257	-6	0
8. I St and 2nd St	-6	205	227	84	203	-60	125	243
9. I St and Rialto Ave	125	76	15	-17	227	-114	6	79
10. I-215 SB Off Ramp and 3rd St	476	83	0	325	0	470	169	246
11. I-215 SB On Ramp and 2nd St	169	373	0	-60	0	166	110	205
12. I-215 NB On Ramp and 3rd St	0	599	157	402	921	222	0	15
13. I-215 NB Off Ramp and 2nd St	0	629	23	166	157	433	0	373
14. H St/G St and 3rd St	54	350	174	211	-24	126	87	599
15. G St and 2nd St	87	419	144	433	174	327	-47	629
16. G St and Rialto Ave	-47	305	166	-114	144	126	-36	76
17. G St and Congress St	0	0	0	0	0	0	0	0
18. Parking Lot Entrance and Congress St	0	0	0	0	0	0	0	0
19. E St and 2nd St	0	313	45	109	0	126	7	345
20. E St and Rialto Ave	7	380	13	126	45	132	44	305
21. E St and Parking Lot Entrance	0	0	0	0	0	0	0	0
22. Arrowhead Ave and Rialto Ave	0	154	151	0	211	245	0	88
23. H St and 5th St	0	231	115	481	458	164	0	543
24. F St and Rialto Ave								
25. E St and 5th St	7	180	63	164	20	157	6	231
26. E St and 4th St	6	7	0	18	63	46	0	10
27. E St-Inland Center Dr and Mill St								

PM Peak Hour DIFFERENCE (2035-2008) - TRUCKS								
	APPROACH				DEPARTURE			
NODE NUMBER	NL	EL	SL	WL	NL	EL	SL	WL
1. K St and 3rd St	0	0	0	0	0	0	0	0
2. K St and 2nd St	0	0	0	0	0	0	0	0
3. K St and Rialto Ave	0	8	4	-4	0	-3	5	4
4. J St and 3rd St	0	0	0	0	0	0	0	-1
5. J St and 2nd St	0	9	0	0	0	4	0	0
6. J St and Rialto Ave	0	0	0	-3	0	0	0	8
7. I St and 3rd St	-65	-6	-22	0	0	5	1	0
8. I St and 2nd St	1	-10	-2	4	-22	1	3	9
9. I St and Rialto Ave	3	-2	0	-3	-2	-6	1	8
10. I-215 SB Off Ramp and 3rd St	24	15	0	22	0	29	9	22
11. I-215 SB On Ramp and 2nd St	9	-9	0	1	0	12	3	-10
12. I-215 NB On Ramp and 3rd St	0	28	-142	29	-126	25	0	15
13. I-215 NB Off Ramp and 2nd St	0	12	-8	12	-142	22	0	-9
14. H St/G St and 3rd St	5	-8	6	8	-1	5	8	0
15. G St and 2nd St	8	18	4	22	6	16	19	12
16. G St and Rialto Ave	19	4	-2	-6	4	8	1	-2
17. G St and Congress St	0	0	0	0	0	0	0	0
18. Parking Lot Entrance and Congress St	0	0	0	0	0	0	0	0
19. E St and 2nd St	51	14	66	8	63	5	56	17
20. E St and Rialto Ave	56	6	43	8	66	9	37	4
21. E St and Parking Lot Entrance	0	0	0	0	0	0	0	0
22. Arrowhead Ave and Rialto Ave	0	2	2	1	1	5	0	0
23. H St and 5th St	0	3	2	33	25	13	0	20
24. F St and Rialto Ave								
25. E St and 5th St	54	0	63	13	63	16	38	3
26. E St and 4th St	38	0	63	1	63	11	51	0
27. E St-Inland Center Dr and Mill St								

PM Peak Hour ADJUSTED DIFFERENCE (2035 to 2009) - AUTOS								0.888889
Adjust model numbers to year 2009/2011 by taking 96%/89% of the DIFFERENCE								0.962963
	APPROACH				DEPARTURE			
NODE NUMBER	NL	EL	SL	WL	NL	EL	SL	WL
1. K St and 3rd St	0	0	0	0	0	0	0	0
2. K St and 2nd St	0	0	0	-2	0	0	0	0
3. K St and Rialto Ave	0	76	43	-69	0	-16	69	87
4. J St and 3rd St	0	0	0	29	0	0	0	-86
5. J St and 2nd St	0	234	0	0	0	81	0	0
6. J St and Rialto Ave	0	0	0	-16	0	0	0	76
7. I St and 3rd St	-276	182	195	0	0	247	-6	0
8. I St and 2nd St	-6	197	219	81	195	-58	120	234
9. I St and Rialto Ave	120	73	14	-16	219	-110	6	76
10. I-215 SB Off Ramp and 3rd St	458	80	0	313	0	453	163	237
11. I-215 SB On Ramp and 2nd St	163	359	0	-58	0	160	106	197
12. I-215 NB On Ramp and 3rd St	0	577	151	387	887	214	0	14
13. I-215 NB Off Ramp and 2nd St	0	606	22	160	151	417	0	359
14. H St/G St and 3rd St	52	337	168	203	-23	121	84	577
15. G St and 2nd St	84	403	139	417	168	315	-45	606
16. G St and Rialto Ave	-45	294	160	-110	139	121	-35	73
17. G St and Congress St	0	0	0	0	0	0	0	0
18. Parking Lot Entrance and Congress St	0	0	0	0	0	0	0	0
19. E St and 2nd St	0	278	40	97	0	112	6	307
20. E St and Rialto Ave	6	338	12	112	40	117	39	271
21. E St and Parking Lot Entrance	0	0	0	0	0	0	0	0
22. Arrowhead Ave and Rialto Ave	0	137	134	0	188	218	0	78
23. H St and 5th St	0	205	102	428	407	146	0	483
24. F St and Rialto Ave	0	0	0	0	0	0	0	0
25. E St and 5th St	6	160	56	146	18	140	5	205
26. E St and 4th St	5	6	0	16	56	41	0	9
27. E St-Inland Center Dr and Mill St								

PM Peak Hour ADJUSTED DIFFERENCE (2035 to 2009) - TRUCKS								0.888889
Adjust model numbers to year 2009/2011 by taking 96%/89% of the DIFFERENCE								0.962963
	APPROACH				DEPARTURE			
NODE NUMBER	NL	EL	SL	WL	NL	EL	SL	WL
1. K St and 3rd St	0	0	0	0	0	0	0	0
2. K St and 2nd St	0	0	0	0	0	0	0	0
3. K St and Rialto Ave	0	8	4	-4	0	-3	5	4
4. J St and 3rd St	0	0	0	0	0	0	0	-1
5. J St and 2nd St	0	9	0	0	0	4	0	0
6. J St and Rialto Ave	0	0	0	-3	0	0	0	8
7. I St and 3rd St	-63	-6	-21	0	0	5	1	0
8. I St and 2nd St	1	-10	-2	4	-21	1	3	9
9. I St and Rialto Ave	3	-2	0	-3	-2	-6	1	8
10. I-215 SB Off Ramp and 3rd St	23	14	0	21	0	28	9	21
11. I-215 SB On Ramp and 2nd St	9	-9	0	1	0	12	3	-10
12. I-215 NB On Ramp and 3rd St	0	27	-137	28	-121	24	0	14
13. I-215 NB Off Ramp and 2nd St	0	12	-8	12	-137	21	0	-9
14. H St/G St and 3rd St	5	-8	6	8	-1	5	8	0
15. G St and 2nd St	8	17	4	21	6	15	18	12
16. G St and Rialto Ave	18	4	-2	-6	4	8	1	-2
17. G St and Congress St	0	0	0	0	0	0	0	0
18. Parking Lot Entrance and Congress St	0	0	0	0	0	0	0	0
19. E St and 2nd St	45	12	59	7	56	4	50	15
20. E St and Rialto Ave	50	5	38	7	59	8	33	4
21. E St and Parking Lot Entrance	0	0	0	0	0	0	0	0
22. Arrowhead Ave and Rialto Ave	0	2	2	1	1	4	0	0
23. H St and 5th St	0	3	2	29	22	12	0	18
24. F St and Rialto Ave	0	0	0	0	0	0	0	0
25. E St and 5th St	48	0	56	12	56	14	34	3
26. E St and 4th St	34	0	56	1	56	10	45	0
27. E St-Inland Center Dr and Mill St								

INTERSECTION	PM 2009/2011 TURNING MOVEMENT COUNTS - AUTOS												PM LINK VOLUMES - AUTOS							
	NORTHBOUND			EASTBOUND			SOUTHBOUND			WESTBOUND			APPROACH				DEPARTURE			
	L	T	R	L	T	R	L	T	R	L	T	R	NL	EL	SL	WL	NL	EL	SL	WL
1. K St and 3rd St	5	2	11	2	82	62	0	1	0	39	116	1	1	156	18	146	5	92	102	121
2. K St and 2nd St	34	5	16	7	256	22	22	21	20	24	264	7	64	295	54	285	18	294	68	318
3. K St and Rialto Ave	30	32	125	6	337	33	5	40	22	104	498	13	67	614	188	376	51	467	177	550
4. J St and 3rd St	1	0	10	0	84	1	0	0	0	18	151	0	0	169	11	85	0	93	19	152
5. J St and 2nd St	10	5	25	6	430	10	7	6	4	14	271	7	17	292	40	446	18	462	30	285
6. J St and Rialto Ave	5	10	11	28	398	4	6	10	9	37	537	8	25	582	26	430	46	415	51	551
7. I St and 3rd St	8	2	31	0	81	18	60	238	58	41	50	0	357	90	41	99	2	172	298	116
8. I St and 2nd St	11	34	191	6	309	8	83	165	32	36	233	9	280	278	235	323	49	582	209	276
9. I St and Rialto Ave	14	130	64	82	349	17	42	87	99	44	532	36	228	612	207	448	249	455	148	645
10. I-215 SB Off Ramp and 3rd St	0	0	0	0	0	0	0	0	0	0	0	0	0	0	0	0	0	0	0	0
11. I-215 SB On Ramp and 2nd St	0	0	0	0	455	155	0	0	0	632	305	0	0	937	0	610	0	455	787	305
12. I-215 NB On Ramp and 3rd St	0	0	0	0	0	0	0	0	0	0	0	0	0	0	0	0	0	0	0	0
13. I-215 NB Off Ramp and 2nd St	122	1	251	247	188	0	0	0	0	0	860	487	0	1,347	373	435	0	439	0	981
14. H St/G St and 3rd St	8	292	55	59	69	31	9	147	17	67	64	13	173	144	355	159	364	133	245	89
15. G St and 2nd St	244	176	46	70	290	26	50	132	82	77	894	73	264	1,044	465	385	319	385	235	1,220
16. G St and Rialto Ave	49	158	11	50	307	23	36	85	64	21	452	138	184	611	218	380	346	354	128	565
17. G St and Congress St	0	191	0	2	0	2	0	178	0	0	0	0	178	0	191	4	193	0	180	0
18. Parking Lot Entrance and Congress St	0	0	0	0	0	0	0	0	0	0	0	0	0	0	0	0	0	0	0	0
19. E St and 2nd St	92	304	87	125	486	46	32	241	157	80	803	24	430	907	483	657	453	606	366	1,052
20. E St and Rialto Ave	99	502	63	17	287	80	26	327	41	75	449	20	393	544	664	384	539	375	481	589
21. E St and Parking Lot Entrance	0	0	0	0	0	0	0	0	0	0	0	0	0	0	0	0	0	0	0	0
22. Arrowhead Ave and Rialto Ave	77	338	40	30	262	55	12	249	47	23	316	14	309	353	455	348	383	314	327	441
23. H St and 5th St	397	269	50	58	444	217	32	179	125	66	810	37	335	912	716	720	363	527	462	1,331
24. F St and Rialto Ave	0	0	0	36	322	0	22	0	70	0	497	32	92	529	0	358	68	344	0	567
25. E St and 5th St	91	344	44	28	413	40	27	290	45	47	734	60	362	841	479	481	432	484	377	870
26. E St and 4th St	57	467	24	8	68	45	9	351	36	49	171	13	396	233	548	121	488	101	445	264
27. E St-Inland Center Dr and Mill St																				

INTERSECTION	PM 2009/2011 TURNING MOVEMENT COUNTS - TRUCKS												PM LINK VOLUMES - TRUCKS							
	NORTHBOUND			EASTBOUND			SOUTHBOUND			WESTBOUND			APPROACH				DEPARTURE			
	L	T	R	L	T	R	L	T	R	L	T	R	NL	EL	SL	WL	NL	EL	SL	WL
1. K St and 3rd St	0	0	0	0	2	2	0	0	0	1	3	0	0	4	0	4	0	3	3	3
2. K St and 2nd St	1	0	0	0	7	1	1	1	1	1	7	0	2	8	2	8	1	8	2	9
3. K St and Rialto Ave	1	1	3	0	7	1	0	1	0	2	11	0	1	14	4	8	1	10	4	12
4. J St and 3rd St	0	0	0	0	2	0	0	0	0	1	4	0	0	5	0	2	0	3	1	4
5. J St and 2nd St	0	0	0	0	12	0	0	0	0	0	9	1	0	10	0	12	1	12	0	9
6. J St and Rialto Ave	0	0	0	0	15	0	0	0	0	1	6	1	0	8	0	15	1	15	1	6
7. I St and 3rd St	0	0	1	0	2	1	2	7	2	1	1	0	10	3	1	3	0	5	8	3
8. I St and 2nd St	0	1	5	0	9	0	2	5	1	1	7	0	8	8	7	9	1	17	6	8
9. I St and Rialto Ave	0	3	1	2	8	0	1	2	2	1	12	1	5	14	5	10	5	10	3	14
10. I-215 SB Off Ramp and 3rd St	0	0	0	0	0	0	0	0	0	0	0	0	0	0	0	0	0	0	0	0
11. I-215 SB On Ramp and 2nd St	0	0	0	0	13	4	0	0	0	18	9	0	0	27	0	17	0	13	22	9
12. I-215 NB On Ramp and 3rd St	0	0	0	0	0	0	0	0	0	0	0	0	0	0	0	0	0	0	0	0
13. I-215 NB Off Ramp and 2nd St	3	0	7	7	5	0	0	0	0	0	24	14	0	38	11	12	21	12	0	28
14. H St/G St and 3rd St	3	8	2	5	6	7	1	3	2	5	0	0	6	5	13	18	13	9	15	5
15. G St and 2nd St	13	9	2	4	15	1	3	7	4	4	48	4	14	56	25	21	17	21	12	65
16. G St and Rialto Ave	3	8	1	3	16	1	2	4	3	1	24	7	10	32	12	20	18	19	7	30
17. G St and Congress St	0	10	0	0	0	0	0	10	0	0	0	0	10	0	10	0	10	0	10	0
18. Parking Lot Entrance and Congress St	0	0	0	0	0	0	0	0	0	0	0	0	0	0	0	0	0	0	0	0
19. E St and 2nd St	5	16	5	7	26	2	2	13	8	4	43	1	23	48	26	35	24	32	20	56
20. E St and Rialto Ave	5	27	3	1	15	4	1	17	2	4	24	1	21	29	35	20	29	20	26	31
21. E St and Parking Lot Entrance	0	0	0	0	0	0	0	0	0	0	0	0	0	0	0	0	0	0	0	0
22. Arrowhead Ave and Rialto Ave	4	18	2	2	14	3	1	13	3	1	17	1	16	19	24	18	20	17	17	23
23. H St and 5th St	14	9	2	2	16	8	1	6	4	2	28	1	12	32	25	25	13	18	16	47
24. F St and Rialto Ave	0	0	0	2	17	0	1	0	4	0	26	2	5	28	0	19	4	18	0	30
25. E St and 5th St	2	6	0	0	25	2	1	9	0	1	27	0	10	28	8	27	6	26	12	29
26. E St and 4th St	1	5	0	0	5	2	1	10	0	0	1	0	11	1	6	7	5	6	12	2
27. E St-Inland Center Dr and Mill St																				

2035 PM Peak Hour REFINED VOLUMES - AUTOS
2009/2011 VOLUME+ADJUSTED DIFFERENCE

NODE NUMBER	APPROACH				DEPARTURE			
	NL	EL	SL	WL	NL	EL	SL	WL
1. K St and 3rd St	1	156	18	146	5	92	102	121
2. K St and 2nd St	64	295	54	285	18	294	68	318
3. K St and Rialto Ave	67	690	231	376	51	467	246	637
4. J St and 3rd St	0	169	11	113	0	93	19	152
5. J St and 2nd St	17	526	40	446	18	543	30	285
6. J St and Rialto Ave	25	582	26	430	46	415	51	627
7. I St and 3rd St	80	272	236	99	2	420	292	116
8. I St and 2nd St	280	475	454	404	244	582	329	510
9. I St and Rialto Ave	348	686	222	448	467	455	154	721
10. I-215 SB Off Ramp and 3rd St	458	80	0	313	0	453	163	237
11. I-215 SB On Ramp and 2nd St	163	1,297	0	552	0	615	893	503
12. I-215 NB On Ramp and 3rd St	0	577	151	387	887	214	0	14
13. I-215 NB Off Ramp and 2nd St	0	1,952	396	594	151	855	0	1,340
14. H St/G St and 3rd St	225	481	523	362	364	254	329	666
15. G St and 2nd St	348	1,448	604	802	487	700	235	1,826
16. G St and Rialto Ave	184	904	378	380	484	475	128	638
17. G St and Congress St	213	0	228	5	230	0	216	0
18. Parking Lot Entrance and Congress St	0	0	0	0	0	0	0	0
19. E St and 2nd St	430	1,185	523	754	453	718	373	1,359
20. E St and Rialto Ave	399	882	675	496	579	492	520	860
21. E St and Parking Lot Entrance	0	0	0	0	0	0	0	0
22. Arrowhead Ave and Rialto Ave	309	490	589	348	570	532	327	519
23. H St and 5th St	335	1,117	818	1,147	770	672	462	1,814
24. F St and Rialto Ave	110	631	0	427	82	410	0	677
25. E St and 5th St	368	1,001	535	627	450	624	382	1,075
26. E St and 4th St	401	239	548	137	544	142	445	273
27. E St-Inland Center Dr and Mill St								

2035 PM Peak Hour REFINED VOLUMES - TRUCKS
2009/2011 VOLUME+ADJUSTED DIFFERENCE

NODE NUMBER	APPROACH				DEPARTURE			
	NL	EL	SL	WL	NL	EL	SL	WL
1. K St and 3rd St	0	4	0	4	0	3	3	3
2. K St and 2nd St	2	8	2	8	1	8	2	9
3. K St and Rialto Ave	1	21	8	8	1	10	9	16
4. J St and 3rd St	0	5	0	2	0	3	1	4
5. J St and 2nd St	0	19	0	12	1	16	0	9
6. J St and Rialto Ave	0	8	0	15	1	15	1	14
7. I St and 3rd St	-52	-3	-20	3	0	10	9	3
8. I St and 2nd St	9	8	7	13	1	18	9	17
9. I St and Rialto Ave	8	14	5	10	5	10	4	22
10. I-215 SB Off Ramp and 3rd St	23	14	0	21	0	28	9	21
11. I-215 SB On Ramp and 2nd St	9	18	0	18	0	25	25	-1
12. I-215 NB On Ramp and 3rd St	0	27	-137	28	-121	24	0	14
13. I-215 NB Off Ramp and 2nd St	0	50	3	24	-116	34	0	19
14. H St/G St and 3rd St	11	5	19	26	13	14	23	5
15. G St and 2nd St	22	73	29	42	23	36	31	77
16. G St and Rialto Ave	28	36	12	20	22	27	8	30
17. G St and Congress St	13	0	13	1	14	0	13	0
18. Parking Lot Entrance and Congress St	0	0	0	0	0	0	0	0
19. E St and 2nd St	68	61	84	42	80	37	69	71
20. E St and Rialto Ave	71	34	74	28	87	28	59	35
21. E St and Parking Lot Entrance	0	0	0	0	0	0	0	0
22. Arrowhead Ave and Rialto Ave	16	21	26	19	21	21	17	23
23. H St and 5th St	12	35	27	54	35	30	16	64
24. F St and Rialto Ave	7	36	0	25	5	24	0	39
25. E St and 5th St	58	28	64	39	62	40	46	32
26. E St and 4th St	45	1	62	8	61	16	57	2
27. E St-Inland Center Dr and Mill St								

2035 PM FINAL LINK VOLUMES - TOTAL
AUTOS

INTERSECTION	NB IN	NB OUT	SB IN	SB OUT	EB IN	EB OUT	WB IN	WB OUT
1. K St and 3rd St	26	152	1	5	217	179	231	137
2. K St and 2nd St	92	101	110	27	331	473	504	436
3. K St and Rialto Ave	236	246	101	76	385	637	705	467
4. J St and 3rd St	16	34	0	0	113	180	251	163
5. J St and 2nd St	63	45	27	27	476	285	462	687
6. J St and Rialto Ave	40	76	38	68	437	627	879	617
7. I St and 3rd St	284	292	96	2	176	172	327	420
8. I St and 2nd St	469	329	289	244	418	510	490	582
9. I St and Rialto Ave	234	154	368	467	472	721	723	455
10. I-215 SB Off Ramp and 3rd St	0	163	458	0	313	237	80	453
11. I-215 SB On Ramp and 2nd St	0	893	163	0	552	503	1,297	615
12. I-215 NB On Ramp and 3rd St	151	0	0	887	387	14	577	214
13. I-215 NB Off Ramp and 2nd St	396	0	0	151	594	1,340	1,952	855
14. H St/G St and 3rd St	530	329	228	364	367	666	488	254
15. G St and 2nd St	613	235	353	487	813	1,826	1,468	700
16. G St and Rialto Ave	378	136	184	518	380	682	904	509
17. G St and Congress St	228	216	213	230	5	0	0	0
18. Parking Lot Entrance and Congress St	0	0	0	0	0	0	0	0
19. E St and 2nd St	523	373	430	453	754	1,359	1,185	718
20. E St and Rialto Ave	675	520	399	579	496	860	882	492
21. E St and Parking Lot Entrance	0	0	0	0	0	0	0	0
22. Arrowhead Ave and Rialto Ave	589	327	309	570	348	519	490	532
23. H St and 5th St	818	462	335	770	1,147	1,814	1,117	672
24. F St and Rialto Ave	0	0	110	82	427	677	631	410
25. E St and 5th St	535	382	368	450	627	1,075	1,001	624
26. E St and 4th St	548	445	401	544	137	273	239	142
27. E St-Inland Center Dr and Mill St								

2035 PM FINAL LINK VOLUMES - TOTAL
TRUCKS

INTERSECTION	NB IN	NB OUT	SB IN	SB OUT	EB IN	EB OUT	WB IN	WB OUT
1. K St and 3rd St	1	4	0	0	6	5	7	4
2. K St and 2nd St	2	3	3	1	8	13	12	12
3. K St and Rialto Ave	8	9	2	2	8	16	21	10
4. J St and 3rd St	0	1	0	0	2	4	7	4
5. J St and 2nd St	0	0	0	1	12	9	15	18
6. J St and Rialto Ave	0	1	0	1	15	14	12	22
7. I St and 3rd St	0	9	0	0	25	5	0	10
8. I St and 2nd St	7	9	9	1	13	17	8	18
9. I St and Rialto Ave	5	4	8	5	10	22	14	10
10. I-215 SB Off Ramp and 3rd St	0	9	23	0	21	21	14	28
11. I-215 SB On Ramp and 2nd St	0	25	9	0	18	0	18	25
12. I-215 NB On Ramp and 3rd St	0	0	0	0	28	14	27	24
13. I-215 NB Off Ramp and 2nd St	3	0	0	0	24	19	50	34
14. H St/G St and 3rd St	19	23	11	13	26	5	5	14
15. G St and 2nd St	29	31	22	23	42	77	73	36
16. G St and Rialto Ave	12	9	28	24	20	33	36	30
17. G St and Congress St	13	13	13	14	1	0	0	0
18. Parking Lot Entrance and Congress St	0	0	0	0	0	0	0	0
19. E St and 2nd St	84	69	68	80	42	71	61	37
20. E St and Rialto Ave	74	59	71	87	28	35	34	28
21. E St and Parking Lot Entrance	0	0	0	0	0	0	0	0
22. Arrowhead Ave and Rialto Ave	26	17	16	21	19	23	21	21
23. H St and 5th St	27	16	12	35	54	64	35	30
24. F St and Rialto Ave	0	0	7	5	25	39	36	24
25. E St and 5th St	64	46	58	62	39	32	28	40
26. E St and 4th St	62	57	45	61	8	2	1	16
27. E St-Inland Center Dr and Mill St								

2035 PM FINAL LINK VOLUMES - TOTAL
TOTAL PCE

INTERSECTION	NB IN	NB OUT	SB IN	SB OUT	EB IN	EB OUT	WB IN	WB OUT
1. K St and 3rd St	28	161	1	5	231	191	246	146
2. K St and 2nd St	97	108	117	29	349	503	532	464
3. K St and Rialto Ave	254	266	106	79	403	673	754	490
4. J St and 3rd St	17	36	0	0	119	189	268	172
5. J St and 2nd St	63	45	27	30	503	305	496	727
6. J St and Rialto Ave	40	79	38	72	471	658	906	667
7. I St and 3rd St	284	313	96	2	233	183	327	442
8. I St and 2nd St	484	349	309	247	447	547	508	622
9. I St and Rialto Ave	244	163	386	480	494	770	753	478
10. I-215 SB Off Ramp and 3rd St	0	182	511	0	361	285	113	516
11. I-215 SB On Ramp and 2nd St	0	950	182	0	593	503	1,337	670
12. I-215 NB On Ramp and 3rd St	151	0	0	887	450	47	638	268
13. I-215 NB Off Ramp and 2nd St	402	0	0	151	649	1,384	2,065	932
14. H St/G St and 3rd St	572	380	252	393	425	677	499	286
15. G St and 2nd St	678	304	402	538	908	1,999	1,633	782
16. G St and Rialto Ave	404	156	248	573	425	757	986	576
17. G St and Congress St	256	244	241	261	7	0	0	0
18. Parking Lot Entrance and Congress St	0	0	0	0	0	0	0	0
19. E St and 2nd St	708	524	579	628	846	1,514	1,318	798
20. E St and Rialto Ave	836	648	554	770	556	936	957	553
21. E St and Parking Lot Entrance	0	0	0	0	0	0	0	0
22. Arrowhead Ave and Rialto Ave	646	365	344	617	390	570	535	578
23. H St and 5th St	870	493	358	838	1,253	1,938	1,184	730
24. F St and Rialto Ave	0	0	124	92	475	752	701	456
25. E St and 5th St	659	471	480	570	701	1,137	1,055	701
26. E St and 4th St	668	556	488	662	152	277	241	172
27. E St-Inland Center Dr and Mill St								

2035 PM FINAL LINK VOLUMES - TOTAL
TOTAL TRUCK PCE

INTERSECTION	NB IN	NB OUT	SB IN	SB OUT	EB IN	EB OUT	WB IN	WB OUT
1. K St and 3rd St	2	10	0	0	14	12	15	9
2. K St and 2nd St	5	7	6	2	18	30	28	28
3. K St and Rialto Ave	18	20	5	4	19	36	48	23
4. J St and 3rd St	1	2	0	0	5	10	16	9
5. J St and 2nd St	0	0	0	3	27	20	34	40
6. J St and Rialto Ave	0	3	0	3	34	31	27	50
7. I St and 3rd St	0	21	0	0	57	11	0	22
8. I St and 2nd St	15	20	20	3	29	37	18	40
9. I St and Rialto Ave	10	10	18	12	22	50	31	23
10. I-215 SB Off Ramp and 3rd St	0	20	52	0	48	48	33	63
11. I-215 SB On Ramp and 2nd St	0	57	20	0	41	0	41	55
12. I-215 NB On Ramp and 3rd St	0	0	0	0	63	33	61	54
13. I-215 NB Off Ramp and 2nd St	7	0	0	0	54	44	113	76
14. H St/G St and 3rd St	42	51	24	29	58	11	11	31
15. G St and 2nd St	65	70	49	51	94	173	165	81
16. G St and Rialto Ave	26	20	63	55	46	75	82	67
17. G St and Congress St	28	28	28	31	2	0	0	0
18. Parking Lot Entrance and Congress St	0	0	0	0	0	0	0	0
19. E St and 2nd St	184	151	149	175	92	155	133	80
20. E St and Rialto Ave	161	128	155	191	60	76	75	61
21. E St and Parking Lot Entrance	0	0	0	0	0	0	0	0
22. Arrowhead Ave and Rialto Ave	57	38	36	46	42	51	45	46
23. H St and 5th St	52	31	23	67	105	124	67	58
24. F St and Rialto Ave	0	0	14	10	48	75	70	46
25. E St and 5th St	124	88	112	120	75	61	54	78
26. E St and 4th St	120	111	87	118	15	4	2	30
27. E St-Inland Center Dr and Mill St								

2008 AM Peak Hour - AUTOS												
	APPROACH					DEPARTURE					TOTAL	TOTAL
NODE NUMBER	NL	EL	SL	WL	SWL	NL	EL	SL	WL	SWL	IN	OUT
27. E St-Inland Center Dr and Mill St	186	944	71	915	741	300	1,323	207	182	844	2,857	2,556

2008 AM Peak Hour - Trucks												
	APPROACH					DEPARTURE					TOTAL	TOTAL
NODE NUMBER	NL	EL	SL	WL	SWL	NL	EL	SL	WL	SWL	IN	OUT
27. E St-Inland Center Dr and Mill St	15	42	1	22	32	7	38	30	8	38	112	114

2008 PM Peak Hour - AUTOS												
	APPROACH					DEPARTURE					TOTAL	TOTAL
NODE NUMBER	NL	EL	SL	WL	SWL	NL	EL	SL	WL	SWL	IN	OUT
27. E St-Inland Center Dr and Mill St	437	1,415	304	783	983	408	1,396	255	696	1,168	3,922	3,515

2008 PM Peak Hour - TRUCKS												
	APPROACH					DEPARTURE					TOTAL	TOTAL
NODE NUMBER	NL	EL	SL	WL	SWL	NL	EL	SL	WL	SWL	IN	OUT
27. E St-Inland Center Dr and Mill St	18	47	5	27	42	10	50	29	21	37	139	137

2035 AM Peak Hour - AUTOS												
	APPROACH					DEPARTURE					TOTAL	TOTAL
NODE NUMBER	NL	EL	SL	WL	SWL	NL	EL	SL	WL	SWL	IN	OUT
27. E St-Inland Center Dr and Mill St	262	987	65	1,298	745	257	1,557	410	282	850	3,357	3,099

2035 AM Peak Hour - Trucks												
	APPROACH					DEPARTURE					TOTAL	TOTAL
NODE NUMBER	NL	EL	SL	WL	SWL	NL	EL	SL	WL	SWL	IN	OUT
27. E St-Inland Center Dr and Mill St	53	75	56	41	34	51	61	75	19	57	259	212

2035 PM Peak Hour - AUTOS												
	APPROACH					DEPARTURE					TOTAL	TOTAL
NODE NUMBER	NL	EL	SL	WL	SWL	NL	EL	SL	WL	SWL	IN	OUT
27. E St-Inland Center Dr and Mill St	481	1,784	574	1,010	827	421	1,418	309	1,212	1,317	4,676	4,256

2035 PM Peak Hour - TRUCKS												
	APPROACH					DEPARTURE					TOTAL	TOTAL
NODE NUMBER	NL	EL	SL	WL	SWL	NL	EL	SL	WL	SWL	IN	OUT
27. E St-Inland Center Dr and Mill St	55	65	63	51	36	53	70	75	28	47	270	220

AM Peak Hour DIFFERENCE - AUTOS										
	APPROACH					DEPARTURE				
NODE NUMBER	NL	EL	SL	WL	SWL	NL	EL	SL	WL	SWL
27. E St-Inland Center Dr and Mill St	76	43	0	383	4	0	234	203	100	6

AM Peak Hour DIFFERENCE - Trucks										
	APPROACH					DEPARTURE				
NODE NUMBER	NL	EL	SL	WL	SWL	NL	EL	SL	WL	SWL
27. E St-Inland Center Dr and Mill St	38	33	55	19	2	44	23	45	11	19

PM Peak Hour DIFFERENCE - AUTOS										
	APPROACH					DEPARTURE				
NODE NUMBER	NL	EL	SL	WL	SWL	NL	EL	SL	WL	SWL
27. E St-Inland Center Dr and Mill St	44	369	270	227	0	13	22	54	516	149

PM Peak Hour DIFFERENCE - TRUCKS										
	APPROACH					DEPARTURE				
NODE NUMBER	NL	EL	SL	WL	SWL	NL	EL	SL	WL	SWL
27. E St-Inland Center Dr and Mill St	37	18	58	24	0	43	20	46	7	10

AM Peak Hour ADJUSTED DIFFERENCE - AUTOS (0.88889)										
	APPROACH					DEPARTURE				
NODE NUMBER	NL	EL	SL	WL	SWL	NL	EL	SL	WL	SWL
27. E St-Inland Center Dr and Mill St	68	38	0	340	4	0	208	180	89	5

AM Peak Hour ADJUSTED DIFFERENCE - Trucks										
	APPROACH					DEPARTURE				
NODE NUMBER	NL	EL	SL	WL	SWL	NL	EL	SL	WL	SWL
27. E St-Inland Center Dr and Mill St	34	29	49	17	2	39	20	40	10	17

PM Peak Hour ADJUSTED DIFFERENCE - AUTOS										
	APPROACH					DEPARTURE				
NODE NUMBER	NL	EL	SL	WL	SWL	NL	EL	SL	WL	SWL
27. E St-Inland Center Dr and Mill St	39	328	240	202	0	12	20	48	459	132

PM Peak Hour ADJUSTED DIFFERENCE - TRUCKS										
	APPROACH					DEPARTURE				
NODE NUMBER	NL	EL	SL	WL	SWL	NL	EL	SL	WL	SWL
27. E St-Inland Center Dr and Mill St	33	16	52	21	0	38	18	41	6	9

AM Peak Hour Turning Movement Counts (2011) - AUTOS																				
	NORTHBOUND				EASTBOUND				SOUTHBOUND				WESTBOUND				NORTHEASTBOUND			
NODE NUMBER	HL	L	T	R	L	T	R	HR	L	T	BR	R	L	BL	T	R	HL	BL	BR	HR
27. E St-Inland Center Dr and Mill St	19	43	146	46	57	303	56	2	22	140	31	35	47	110	247	18	4	95	160	33

AM Peak Hour Turning Movement Counts (2011) - TRUCKS																				
	NORTHBOUND				EASTBOUND				SOUTHBOUND				WESTBOUND				NORTHEASTBOUND			
NODE NUMBER	HL	L	T	R	L	T	R	HR	L	T	BR	R	L	BL	T	R	HL	BL	BR	HR
27. E St-Inland Center Dr and Mill St	2	3	11	4	5	24	4	0	2	11	2	3	4	9	20	1	0	8	13	3

PM Peak Hour Turning Movement Counts (2011) - AUTOS																				
	NORTHBOUND				EASTBOUND				SOUTHBOUND				WESTBOUND				NORTHEASTBOUND			
NODE NUMBER	HL	L	T	R	L	T	R	HR	L	T	BR	R	L	BL	T	R	HL	BL	BR	HR
27. E St-Inland Center Dr and Mill St	33	137	450	93	91	284	69	5	24	315	100	70	69	220	393	25	13	131	162	41

PM Peak Hour Turning Movement Counts (2011) - TRUCKS																				
	NORTHBOUND				EASTBOUND				SOUTHBOUND				WESTBOUND				NORTHEASTBOUND			
NODE NUMBER	HL	L	T	R	L	T	R	HR	L	T	BR	R	L	BL	T	R	HL	BL	BR	HR
27. E St-Inland Center Dr and Mill St	2	7	24	5	5	15	4	0	1	17	5	4	4	12	21	1	1	7	9	2

APPROACH					DEPARTURE				
NL	EL	SL	WL	SWL	NL	EL	SL	WL	SWL
228	423	254	418	293	316	532	276	329	162

APPROACH					DEPARTURE				
NL	EL	SL	WL	SWL	NL	EL	SL	WL	SWL
18	33	20	33	23	25	42	22	26	13

APPROACH					DEPARTURE				
NL	EL	SL	WL	SWL	NL	EL	SL	WL	SWL
509	707	713	449	348	697	563	495	613	358

APPROACH					DEPARTURE				
NL	EL	SL	WL	SWL	NL	EL	SL	WL	SWL
27	38	38	24	18	37	30	26	33	19

2035 AM Peak Hour Refined Volumes - AUTOS										
	APPROACH					DEPARTURE				
NODE NUMBER	NL	EL	SL	WL	SWL	NL	EL	SL	WL	SWL
27. E St-Inland Center Dr and Mill St	296	461	254	758	297	316	740	456	418	167

2035 AM Peak Hour Refined Volumes - TRUCKS										
	APPROACH					DEPARTURE				
NODE NUMBER	NL	EL	SL	WL	SWL	NL	EL	SL	WL	SWL
27. E St-Inland Center Dr and Mill St	52	62	69	50	25	64	62	62	36	30

2035 PM Peak Hour Refined Volumes - AUTOS										
	APPROACH					DEPARTURE				
NODE NUMBER	NL	EL	SL	WL	SWL	NL	EL	SL	WL	SWL
27. E St-Inland Center Dr and Mill St	548	1,035	953	651	348	709	583	543	1,072	490

2035 PM Peak Hour Refined Volumes - TRUCKS										
	APPROACH					DEPARTURE				
NODE NUMBER	NL	EL	SL	WL	SWL	NL	EL	SL	WL	SWL
27. E St-Inland Center Dr and Mill St	60	54	90	45	18	75	48	67	39	28

2035 AM Peak Hour Final Link Volumes - AUTOS										
	APPROACH					DEPARTURE				
NODE NUMBER	NL	EL	SL	WL	SWL	NL	EL	SL	WL	SWL
27. E St-Inland Center Dr and Mill St	296	461	254	758	297	316	740	456	418	167

2035 AM Peak Hour Final Link Volumes - TRUCK PCE										
	APPROACH					DEPARTURE				
NODE NUMBER	NL	EL	SL	WL	SWL	NL	EL	SL	WL	SWL
27. E St-Inland Center Dr and Mill St	93	112	124	90	45	115	111	111	65	54

2035 PM Peak Hour Final Link Volumes - AUTOS										
	APPROACH					DEPARTURE				
NODE NUMBER	NL	EL	SL	WL	SWL	NL	EL	SL	WL	SWL
27. E St-Inland Center Dr and Mill St	548	1,035	953	651	348	709	583	543	1,072	490

2035 PM Peak Hour Final Link Volumes - TRUCK PCE										
	APPROACH					DEPARTURE				
NODE NUMBER	NL	EL	SL	WL	SWL	NL	EL	SL	WL	SWL
27. E St-Inland Center Dr and Mill St	116	104	174	87	36	145	93	130	75	54

2035 AM Peak Hour Final Link Volumes - TOTAL PCE										
	APPROACH					DEPARTURE				
NODE NUMBER	NL	EL	SL	WL	SWL	NL	EL	SL	WL	SWL
27. E St-Inland Center Dr and Mill St	389	573	378	848	342	431	851	567	483	221

2035 PM Peak Hour Final Link Volumes - TOTAL PCE										
	APPROACH					DEPARTURE				
NODE NUMBER	NL	EL	SL	WL	SWL	NL	EL	SL	WL	SWL
27. E St-Inland Center Dr and Mill St	664	1,139	1,127	738	383	854	676	673	1,147	544

G St/Congress St and F St/Rialto Ave are missing in the model network. To develop the future link volumes for these intersections, calculate the growth between existing counts and future model volumes for adjacent two intersections and apply the average growth factor to the existing counts at G St/Congress St and F St/Rialto Ave.

EXISTING-2011	APPROACH				DEPARTURE					
AM - AUTOS	NL	EL	SL	WL	NL	EL	SL	WL	TOTAL	GROWTH
16. G St and Rialto Ave	185	309	76	500	147	518	131	274	2141	
20. E St and Rialto Ave	211	239	246	450	207	424	260	255	2293	

MODEL-2035	APPROACH				DEPARTURE					
AM - AUTOS	NL	EL	SL	WL	NL	EL	SL	WL	TOTAL	
16. G St and Rialto Ave	286	99	232	591	196	452	417	141	2414	1.13
20. E St and Rialto Ave	493	218	257	452	380	681	262	99	2842	1.24
										1.18

EXISTING-2011	APPROACH				DEPARTURE				
PM - AUTOS	NL	EL	SL	WL	NL	EL	SL	WL	TOTAL
16. G St and Rialto Ave	184	611	218	380	346	354	128	565	2786
20. E St and Rialto Ave	393	544	664	384	539	375	481	589	3969

MODEL-2035	APPROACH				DEPARTURE					
PM - AUTOS	NL	EL	SL	WL	NL	EL	SL	WL	TOTAL	
16. G St and Rialto Ave	295	584	572	377	405	313	356	754	3656	1.31
20. E St and Rialto Ave	563	832	421	313	613	451	481	584	4258	1.07
										1.19

GROWTH RATE			
AM - AUTOS	1.18	AM - TRUCKS	1.18
PM - AUTOS	1.19	PM - TRUCKS	1.28

EXISTING-2011	APPROACH				DEPARTURE			
AM - AUTOS	NL	EL	SL	WL	NL	EL	SL	WL
17. G St and Congress St	188	0	92	7	96	0	188	3
24. F St and Rialto Ave	44	237	0	354	62	341	0	232

EXISTING-2011	APPROACH				DEPARTURE			
PM - AUTOS	NL	EL	SL	WL	NL	EL	SL	WL
17. G St and Congress St	178	0	191	4	193	0	180	0
24. F St and Rialto Ave	92	529	0	358	68	344	0	567

FUTURE - 2035	APPROACH				DEPARTURE			
AM - AUTOS	NL	EL	SL	WL	NL	EL	SL	WL
17. G St and Congress St	223	0	109	9	115	0	223	4
24. F St and Rialto Ave	52	281	0	420	74	404	0	275

EXISTING-2011	APPROACH				DEPARTURE			
PM - AUTOS	NL	EL	SL	WL	NL	EL	SL	WL
17. G St and Congress St	213	0	228	5	230	0	216	0
24. F St and Rialto Ave	110	631	0	427	82	410	0	677

EXISTING-2011	APPROACH				DEPARTURE					
AM - TRUCKS	NL	EL	SL	WL	NL	EL	SL	WL	TOTAL	GROWTH
16. G St and Rialto Ave	15	24	6	40	12	41	10	22	169	
20. E St and Rialto Ave	17	19	19	36	16	34	21	20	181	

MODEL-2035	APPROACH				DEPARTURE					
AM - TRUCKS	NL	EL	SL	WL	NL	EL	SL	WL	TOTAL	
16. G St and Rialto Ave	18	8	7	12	6	11	10	17	89	0.53
20. E St and Rialto Ave	85	20	51	11	84	19	53	8	331	1.83
										1.18

EXISTING-2011	APPROACH				DEPARTURE				
PM - TRUCKS	NL	EL	SL	WL	NL	EL	SL	WL	TOTAL
16. G St and Rialto Ave	10	32	12	20	18	19	7	30	148
20. E St and Rialto Ave	21	29	35	20	29	20	26	31	211

MODEL-2035	APPROACH				DEPARTURE					
PM - TRUCKS	NL	EL	SL	WL	NL	EL	SL	WL	TOTAL	
16. G St and Rialto Ave	26	14	14	15	11	18	13	23	134	0.90
20. E St and Rialto Ave	82	22	53	18	81	24	55	14	349	1.65
										1.28

EXISTING-2011	APPROACH				DEPARTURE			
AM - TRUCKS	NL	EL	SL	WL	NL	EL	SL	WL
17. G St and Congress St	15	0	7	1	8	0	15	0
24. F St and Rialto Ave	3	19	0	28	5	27	0	18

EXISTING-2011	APPROACH				DEPARTURE			
PM - TRUCKS	NL	EL	SL	WL	NL	EL	SL	WL
17. G St and Congress St	10	0	10	0	10	0	10	0
24. F St and Rialto Ave	5	28	0	19	4	18	0	30

FUTURE - 2035	APPROACH				DEPARTURE			
AM - TRUCKS	NL	EL	SL	WL	NL	EL	SL	WL
17. G St and Congress St	18	0	9	1	9	0	18	1
24. F St and Rialto Ave	5	23	0	33	6	32	0	22

FUTURE - 2035	APPROACH				DEPARTURE			
PM - TRUCKS	NL	EL	SL	WL	NL	EL	SL	WL
17. G St and Congress St	13	0	13	1	14	0	13	0
24. F St and Rialto Ave	7	36	0	25	5	24	0	39

Intersection	2035 AM TURNING MOVEMENT VOLUMES FORECAST YEAR NO BUILD											
	NORTHBOUND			EASTBOUND			SOUTHBOUND			WESTBOUND		
	L	T	R	L	T	R	L	T	R	L	T	R
1. K St and 3rd St	11	9	27	1	190	1	0	0	0	41	78	1
2. K St and 2nd St	23	5	60	12	416	20	11	33	16	50	270	28
3. K St and Rialto Ave	49	53	134	33	531	67	5	60	38	153	205	2
4. J St and 3rd St	6	0	6	0	222	20	0	0	0	12	124	0
5. J St and 2nd St	20	1	106	10	509	36	17	10	0	18	354	23
6. J St and Rialto Ave	25	9	5	40	674	5	15	2	3	48	368	60
7. I St and 3rd St	0	0	0	0	245	0	0	0	0	0	89	0
8. I St and 2nd St	12	31	113	29	623	34	19	16	31	234	348	7
9. I St and Rialto Ave	12	69	67	110	522	25	124	131	144	39	289	16
10. I-215 SB Off Ramp and 3rd St	0	0	0	0	235	10	563	417	18	167	72	0
11. I-215 SB On Ramp and 2nd St	0	0	0	0	719	36	195	12	379	278	210	0
12. I-215 NB On Ramp and 3rd St	2	278	29	242	558	0	0	0	0	0	236	154
13. I-215 NB Ramps and 2nd St	81	33	1114	115	800	0	0	0	0	0	419	159
14. H St/G St and 3rd St	0	80	214	41	466	174	26	256	202	22	202	2
15. G St and 2nd St	148	191	85	139	1546	181	150	250	38	83	432	77
16. G St and Rialto Ave	15	64	49	33	531	26	196	144	57	55	260	75
17. G St and Congress St	0	126	0	7	0	4	0	255	6	0	0	0
18. Parking Lot Entrance and Congress St	0	0	0	0	0	0	0	0	0	0	0	0
19. E St and 2nd St	83	210	75	269	940	153	18	469	67	74	429	14
20. E St and Rialto Ave	19	271	74	38	604	41	129	370	39	27	265	57
21. E St and Parking Lot Entrance	0	0	0	0	0	0	0	0	0	0	0	0
22. Arrowhead Ave and Rialto Ave	9	219	25	64	277	19	61	349	49	39	243	41
23. H St and 5th St	111	167	12	185	1174	407	22	138	114	10	315	15
24. F St and Rialto Ave	0	0	0	44	434	0	27	0	34	0	281	41
25. E St and 5th St	47	236	64	55	915	108	77	371	34	55	289	28
26. E St and 4th St	16	341	100	10	88	23	31	446	34	8	27	19
27. E St-Inland Center Dr and Mill St												

Intersection	2035 PM TURNING MOVEMENT VOLUMES FORECAST YEAR NO BUILD											
	NORTHBOUND			EASTBOUND			SOUTHBOUND			WESTBOUND		
	L	T	R	L	T	R	L	T	R	L	T	R
1. K St and 3rd St	8	2	27	2	299	99	0	0	0	61	143	1
2. K St and 2nd St	38	8	53	19	464	15	93	42	27	62	375	17
3. K St and Rialto Ave	49	55	173	8	393	53	6	69	32	145	593	16
4. J St and 3rd St	5	0	32	0	346	30	0	0	0	36	190	0
5. J St and 2nd St	21	1	76	10	640	31	41	16	5	43	555	29
6. J St and Rialto Ave	26	6	41	6	586	5	40	4	2	75	655	60
7. I St and 3rd St	0	0	0	0	396	0	0	0	0	0	198	0
8. I St and 2nd St	56	20	197	17	517	45	8	23	8	274	573	13
9. I St and Rialto Ave	7	197	45	131	450	9	102	116	169	38	594	65
10. I-215 SB Off Ramp and 3rd St	0	0	0	0	371	32	340	354	75	115	132	0
11. I-215 SB On Ramp and 2nd St	0	0	0	0	565	157	105	32	365	886	499	0
12. I-215 NB On Ramp and 3rd St	7	433	160	302	412	0	0	0	0	0	246	586
13. I-215 NB Ramps and 2nd St	21	6	400	150	531	0	0	0	0	0	1363	444
14. H St/G St and 3rd St	178	296	91	91	187	157	7	162	98	100	401	6
15. G St and 2nd St	390	242	52	198	738	55	72	170	163	82	1473	104
16. G St and Rialto Ave	63	277	61	24	441	12	132	118	54	48	649	274
17. G St and Congress St	0	257	0	4	0	4	0	241	0	0	0	0
18. Parking Lot Entrance and Congress St	0	0	0	0	0	0	0	0	0	0	0	0
19. E St and 2nd St	141	439	130	157	627	65	41	336	205	124	1168	33
20. E St and Rialto Ave	89	685	69	32	437	89	48	442	62	117	785	53
21. E St and Parking Lot Entrance	0	0	0	0	0	0	0	0	0	0	0	0
22. Arrowhead Ave and Rialto Ave	51	542	132	22	396	24	50	291	39	50	480	52
23. H St and 5th St	429	518	15	271	701	340	15	134	244	19	1266	49
24. F St and Rialto Ave	0	0	0	43	420	0	36	0	88	0	665	49
25. E St and 5th St	132	452	72	57	561	68	68	332	75	72	929	60
26. E St and 4th St	57	586	82	19	80	65	10	457	51	34	169	57
27. E St-Inland Center Dr and Mill St												

Turning Movement Counts (2011) - ALL VEHICLES

27. E St-Inland Center Dr and Mill St	NORTHBOUND				EASTBOUND				SOUTHBOUND				WESTBOUND				NORTHEASTBOUND				APPROACH					DEPARTURE				
NODE NUMBER	HL	L	T	R	L	T	R	HR	L	T	BR	R	L	BL	T	R	HL	BL	BR	HR	NL	EL	SL	WL	SWL	NL	EL	SL	WL	SWL
AM Peak Hour	22	48	164	52	65	342	63	2	25	158	35	40	53	125	279	20	4	108	181	38	257	477	287	472	331	357	601	312	372	183
PM Peak Hour	37	151	496	103	101	313	76	5	26	348	110	77	76	243	433	27	15	144	179	45	561	780	786	495	383	768	621	545	676	395

2035 NO PROJECT TURN VOLUMES - PCE

27. E St-Inland Center Dr and Mill St	NORTHBOUND				EASTBOUND				SOUTHBOUND				WESTBOUND				NORTHEASTBOUND				APPROACH				
NODE NUMBER	HL	L	T	R	L	T	R	HR	L	T	BR	R	L	BL	T	R	HL	BL	BR	HR	NL	EL	SL	WL	SWL
AM Peak Hour	29	63	217	69	117	615	113	4	38	239	52	60	64	149	335	24	4	111	187	39	389	573	378	848	342
PM Peak Hour	53	216	711	147	150	466	114	8	31	411	130	92	112	355	633	40	15	145	179	45	664	1,139	1,127	738	383

2035 WITH PROJECT VOLUMES

VOLUME DEVELOPMENT WORKSHEETS

TOTAL NUMBER OF BUSES

ROUTE 1: ARMC-SAN BERNARDINO-DEL ROSA (8 NB; 8 SB)

Intersection	AM PEAK HOUR PCE											
	NORTHBOUND			EASTBOUND			SOUTHBOUND			WESTBOUND		
	L	T	R	L	T	R	L	T	R	L	T	R
1. K St and 3rd St						8		8				
2. K St and 2nd St							8		8			
3. K St and Rialto Ave												
4. J St and 3rd St	8											
5. J St and 2nd St					8							8
6. J St and Rialto Ave												
7. I St and 3rd St												
8. I St and 2nd St					8						8	
9. I St and Rialto Ave												
10. I-215 SB Off Ramp and 3rd St												
11. I-215 SB On Ramp and 2nd St					8						8	
12. I-215 NB On Ramp and 3rd St												
13. I-215 NB Ramps and 2nd St					8						8	
14. H St/G St and 3rd St												
15. G St and 2nd St	8					8						
16. G St and Rialto Ave							8					8
17. G St and Congress St												
18. Parking Lot Entrance and Congress St												
19. E St and 2nd St		8						8				
20. E St and Rialto Ave				8				8				
21. E St and Parking Lot Entrance												
22. Arrowhead Ave and Rialto Ave												
23. H St and 5th St												
24. F St and Rialto Ave	8		8			8						
25. E St and 5th St			8							8		
26. E St and 4th St		8						8				
27. E St-Inland Center Dr and Mill St												

Intersection	PM PEAK HOUR PCE											
	NORTHBOUND			EASTBOUND			SOUTHBOUND			WESTBOUND		
	L	T	R	L	T	R	L	T	R	L	T	R
1. K St and 3rd St						8		8				
2. K St and 2nd St							8		8			
3. K St and Rialto Ave												
4. J St and 3rd St	8											
5. J St and 2nd St					8							8
6. J St and Rialto Ave												
7. I St and 3rd St												
8. I St and 2nd St					8						8	
9. I St and Rialto Ave												
10. I-215 SB Off Ramp and 3rd St												
11. I-215 SB On Ramp and 2nd St					8						8	
12. I-215 NB On Ramp and 3rd St												
13. I-215 NB Ramps and 2nd St					8						8	
14. H St/G St and 3rd St												
15. G St and 2nd St	8					8						
16. G St and Rialto Ave							8					8
17. G St and Congress St												
18. Parking Lot Entrance and Congress St												
19. E St and 2nd St		8						8				
20. E St and Rialto Ave				8				8				
21. E St and Parking Lot Entrance												
22. Arrowhead Ave and Rialto Ave												
23. H St and 5th St												
24. F St and Rialto Ave	8		8			8						
25. E St and 5th St			8							8		
26. E St and 4th St		8						8				
27. E St-Inland Center Dr and Mill St												

ROUTE 2: CAL STATE-E STREET-LOMA LINDA (8 NB; 8 SB)

Intersection	AM PEAK HOUR PCE											
	NORTHBOUND			EASTBOUND			SOUTHBOUND			WESTBOUND		
	L	T	R	L	T	R	L	T	R	L	T	R
1. K St and 3rd St												
2. K St and 2nd St												
3. K St and Rialto Ave												
4. J St and 3rd St												
5. J St and 2nd St												
6. J St and Rialto Ave												
7. I St and 3rd St												
8. I St and 2nd St												
9. I St and Rialto Ave												
10. I-215 SB Off Ramp and 3rd St												
11. I-215 SB On Ramp and 2nd St												
12. I-215 NB On Ramp and 3rd St												
13. I-215 NB Ramps and 2nd St												
14. H St/G St and 3rd St		8						8				
15. G St and 2nd St		8						8				
16. G St and Rialto Ave							8					8
17. G St and Congress St												
18. Parking Lot Entrance and Congress St												
19. E St and 2nd St												
20. E St and Rialto Ave	8					8						
21. E St and Parking Lot Entrance		8						8				
22. Arrowhead Ave and Rialto Ave												
23. H St and 5th St		8						8				
24. F St and Rialto Ave	8		8			8				8		
25. E St and 5th St												
26. E St and 4th St												
27. E St-Inland Center Dr and Mill St		8						8				

Intersection	PM PEAK HOUR PCE											
	NORTHBOUND			EASTBOUND			SOUTHBOUND			WESTBOUND		
	L	T	R	L	T	R	L	T	R	L	T	R
1. K St and 3rd St												
2. K St and 2nd St												
3. K St and Rialto Ave												
4. J St and 3rd St												
5. J St and 2nd St												
6. J St and Rialto Ave												
7. I St and 3rd St												
8. I St and 2nd St												
9. I St and Rialto Ave												
10. I-215 SB Off Ramp and 3rd St												
11. I-215 SB On Ramp and 2nd St												
12. I-215 NB On Ramp and 3rd St												
13. I-215 NB Ramps and 2nd St												
14. H St/G St and 3rd St		8						8				
15. G St and 2nd St		8						8				
16. G St and Rialto Ave							8					8
17. G St and Congress St												
18. Parking Lot Entrance and Congress St												
19. E St and 2nd St												
20. E St and Rialto Ave	8					8						
21. E St and Parking Lot Entrance		8						8				
22. Arrowhead Ave and Rialto Ave												
23. H St and 5th St		8						8				
24. F St and Rialto Ave	8		8			8				8		
25. E St and 5th St												
26. E St and 4th St												
27. E St-Inland Center Dr and Mill St		8						8				

ROUTE 3 (CCW): BASELINE-HIGHLAND-SAN BERNARDINO (6 AM; 8 PM)

Intersection	AM PEAK HOUR PCE											
	NORTHBOUND			EASTBOUND			SOUTHBOUND			WESTBOUND		
	L	T	R	L	T	R	L	T	R	L	T	R
1. K St and 3rd St												
2. K St and 2nd St												
3. K St and Rialto Ave												
4. J St and 3rd St												
5. J St and 2nd St												
6. J St and Rialto Ave												
7. I St and 3rd St												
8. I St and 2nd St												
9. I St and Rialto Ave												
10. I-215 SB Off Ramp and 3rd St												
11. I-215 SB On Ramp and 2nd St												
12. I-215 NB On Ramp and 3rd St												
13. I-215 NB Ramps and 2nd St												
14. H St/G St and 3rd St								6				
15. G St and 2nd St								6				
16. G St and Rialto Ave							6					
17. G St and Congress St												
18. Parking Lot Entrance and Congress St												
19. E St and 2nd St		6										
20. E St and Rialto Ave				6								
21. E St and Parking Lot Entrance												
22. Arrowhead Ave and Rialto Ave												
23. H St and 5th St						6						
24. F St and Rialto Ave			6			6						
25. E St and 5th St			6									
26. E St and 4th St		6										
27. E St-Inland Center Dr and Mill St												

Intersection	PM PEAK HOUR PCE											
	NORTHBOUND			EASTBOUND			SOUTHBOUND			WESTBOUND		
	L	T	R	L	T	R	L	T	R	L	T	R
1. K St and 3rd St												
2. K St and 2nd St												
3. K St and Rialto Ave												
4. J St and 3rd St												
5. J St and 2nd St												
6. J St and Rialto Ave												
7. I St and 3rd St												
8. I St and 2nd St												
9. I St and Rialto Ave												
10. I-215 SB Off Ramp and 3rd St												
11. I-215 SB On Ramp and 2nd St												
12. I-215 NB On Ramp and 3rd St												
13. I-215 NB Ramps and 2nd St												
14. H St/G St and 3rd St								8				
15. G St and 2nd St								8				
18. G St and Rialto Ave												
17. G St and Congress St							8					
18. Parking Lot Entrance and Congress St												
19. E St and 2nd St		8										
20. E St and Rialto Ave				8								
21. E St and Parking Lot Entrance												
22. Arrowhead Ave and Rialto Ave												
23. H St and 5th St						8						
24. F St and Rialto Ave			8			8						
25. E St and 5th St			8									
26. E St and 4th St		8										
27. E St-Inland Center Dr and Mill St												

ROUTE 4 (CW): BASELINE-HIGHLAND-SAN BERNARDINO (6 AM; 8 PM)

Intersection	AM PEAK HOUR PCE											
	NORTHBOUND			EASTBOUND			SOUTHBOUND			WESTBOUND		
	L	T	R	L	T	R	L	T	R	L	T	R
1. K St and 3rd St												
2. K St and 2nd St												
3. K St and Rialto Ave												
4. J St and 3rd St												
5. J St and 2nd St												
6. J St and Rialto Ave												
7. I St and 3rd St												
8. I St and 2nd St												
9. I St and Rialto Ave												
10. I-215 SB Off Ramp and 3rd St												
11. I-215 SB On Ramp and 2nd St												
12. I-215 NB On Ramp and 3rd St												
13. I-215 NB Ramps and 2nd St												
14. H St/G St and 3rd St		6										
15. G St and 2nd St		6										
16. G St and Rialto Ave												6
17. G St and Congress St												
18. Parking Lot Entrance and Congress St												
19. E St and 2nd St								6				
20. E St and Rialto Ave								6				
21. E St and Parking Lot Entrance												
22. Arrowhead Ave and Rialto Ave												
23. H St and 5th St	6											
24. F St and Rialto Ave	6											
25. E St and 5th St										6		
26. E St and 4th St								6				
27. E St-Inland Center Dr and Mill St												

Intersection	PM PEAK HOUR PCE											
	NORTHBOUND			EASTBOUND			SOUTHBOUND			WESTBOUND		
	L	T	R	L	T	R	L	T	R	L	T	R
1. K St and 3rd St												
2. K St and 2nd St												
3. K St and Rialto Ave												
4. J St and 3rd St												
5. J St and 2nd St												
6. J St and Rialto Ave												
7. I St and 3rd St												
8. I St and 2nd St												
9. I St and Rialto Ave												
10. I-215 SB Off Ramp and 3rd St												
11. I-215 SB On Ramp and 2nd St												
12. I-215 NB On Ramp and 3rd St												
13. I-215 NB Ramps and 2nd St												
14. H St/G St and 3rd St		8										
15. G St and 2nd St		8										
18. G St and Rialto Ave												8
17. G St and Congress St												
18. Parking Lot Entrance and Congress St												
19. E St and 2nd St								8				
20. E St and Rialto Ave								8				
21. E St and Parking Lot Entrance												
22. Arrowhead Ave and Rialto Ave												
23. H St and 5th St	8											
24. F St and Rialto Ave	8											
25. E St and 5th St										8		
26. E St and 4th St								8				
27. E St-Inland Center Dr and Mill St												

ROUTE 5: SAN BERNARDINO-DEL ROSA-CAL STATE (4 NB; 4 SB)

Intersection	AM PEAK HOUR PCE											
	NORTHBOUND			EASTBOUND			SOUTHBOUND			WESTBOUND		
	L	T	R	L	T	R	L	T	R	L	T	R
1. K St and 3rd St												
2. K St and 2nd St												
3. K St and Rialto Ave												
4. J St and 3rd St												
5. J St and 2nd St												
6. J St and Rialto Ave												
7. I St and 3rd St												
8. I St and 2nd St												
9. I St and Rialto Ave												
10. I-215 SB Off Ramp and 3rd St												
11. I-215 SB On Ramp and 2nd St												
12. I-215 NB On Ramp and 3rd St												
13. I-215 NB Ramps and 2nd St												
14. H St/G St and 3rd St			4					4				
15. G St and 2nd St		4						4				
16. G St and Rialto Ave							4					4
17. G St and Congress St												
18. Parking Lot Entrance and Congress St												
19. E St and 2nd St			4							4		
20. E St and Rialto Ave				4				4				
21. E St and Parking Lot Entrance												
22. Arrowhead Ave and Rialto Ave												
23. H St and 5th St										4		
24. F St and Rialto Ave	4		4			4						
25. E St and 5th St												
26. E St and 4th St												
27. E St-Inland Center Dr and Mill St												

Intersection	PM PEAK HOUR PCE											
	NORTHBOUND			EASTBOUND			SOUTHBOUND			WESTBOUND		
	L	T	R	L	T	R	L	T	R	L	T	R
1. K St and 3rd St												
2. K St and 2nd St												
3. K St and Rialto Ave												
4. J St and 3rd St												
5. J St and 2nd St												
6. J St and Rialto Ave												
7. I St and 3rd St												
8. I St and 2nd St												
9. I St and Rialto Ave												
10. I-215 SB Off Ramp and 3rd St												
11. I-215 SB On Ramp and 2nd St												
12. I-215 NB On Ramp and 3rd St												
13. I-215 NB Ramps and 2nd St												
14. H St/G St and 3rd St			4					4				
15. G St and 2nd St		4						4				
16. G St and Rialto Ave							4					4
17. G St and Congress St												
18. Parking Lot Entrance and Congress St												
19. E St and 2nd St			4							4		
20. E St and Rialto Ave				4				4				
21. E St and Parking Lot Entrance												
22. Arrowhead Ave and Rialto Ave												
23. H St and 5th St										4		
24. F St and Rialto Ave	4		4			4						
25. E St and 5th St												
26. E St and 4th St												
27. E St-Inland Center Dr and Mill St												

ROUTE 7: N. SAN BERNARDINO-SIERRA WAY-SAN BERNARDINO (4 NB; 4 SB)

Intersection	AM PEAK HOUR PCE											
	NORTHBOUND			EASTBOUND			SOUTHBOUND			WESTBOUND		
	L	T	R	L	T	R	L	T	R	L	T	R
1. K St and 3rd St												
2. K St and 2nd St												
3. K St and Rialto Ave												
4. J St and 3rd St												
5. J St and 2nd St												
6. J St and Rialto Ave												
7. I St and 3rd St												
8. I St and 2nd St												
9. I St and Rialto Ave												
10. I-215 SB Off Ramp and 3rd St												
11. I-215 SB On Ramp and 2nd St												
12. I-215 NB On Ramp and 3rd St												
13. I-215 NB Ramps and 2nd St												
14. H St/G St and 3rd St												
15. G St and 2nd St												
16. G St and Rialto Ave												
17. G St and Congress St												
18. Parking Lot Entrance and Congress St												
19. E St and 2nd St		4						4				
20. E St and Rialto Ave				4				4				
21. E St and Parking Lot Entrance												
22. Arrowhead Ave and Rialto Ave												
23. H St and 5th St												
24. F St and Rialto Ave			4									
25. E St and 5th St			4							4		
26. E St and 4th St		4						4				
27. E St-Inland Center Dr and Mill St												

Intersection	PM PEAK HOUR PCE											
	NORTHBOUND			EASTBOUND			SOUTHBOUND			WESTBOUND		
	L	T	R	L	T	R	L	T	R	L	T	R
1. K St and 3rd St												
2. K St and 2nd St												
3. K St and Rialto Ave												
4. J St and 3rd St												
5. J St and 2nd St												
6. J St and Rialto Ave												
7. I St and 3rd St												
8. I St and 2nd St												
9. I St and Rialto Ave												
10. I-215 SB Off Ramp and 3rd St												
11. I-215 SB On Ramp and 2nd St												
12. I-215 NB On Ramp and 3rd St												
13. I-215 NB Ramps and 2nd St												
14. H St/G St and 3rd St												
15. G St and 2nd St												
16. G St and Rialto Ave												
17. G St and Congress St												
18. Parking Lot Entrance and Congress St												
19. E St and 2nd St		4						4				
20. E St and Rialto Ave				4				4				
21. E St and Parking Lot Entrance												
22. Arrowhead Ave and Rialto Ave												
23. H St and 5th St												
24. F St and Rialto Ave			4									
25. E St and 5th St			4							4		
26. E St and 4th St		4						4				
27. E St-Inland Center Dr and Mill St												

ROUTE 8: SAN BERNARDINO-MENTONE-YUCAIPA (2 EB; 2 WB)

Intersection	AM PEAK HOUR PCE											
	NORTHBOUND			EASTBOUND			SOUTHBOUND			WESTBOUND		
	L	T	R	L	T	R	L	T	R	L	T	R
1. K St and 3rd St												
2. K St and 2nd St												
3. K St and Rialto Ave												
4. J St and 3rd St												
5. J St and 2nd St												
6. J St and Rialto Ave												
7. I St and 3rd St												
8. I St and 2nd St												
9. I St and Rialto Ave												
10. I-215 SB Off Ramp and 3rd St												
11. I-215 SB On Ramp and 2nd St												
12. I-215 NB On Ramp and 3rd St												
13. I-215 NB Ramps and 2nd St												
14. H St/G St and 3rd St												
15. G St and 2nd St												
16. G St and Rialto Ave												
17. G St and Congress St												
18. Parking Lot Entrance and Congress St												
19. E St and 2nd St		2						2				
20. E St and Rialto Ave				2				2				
21. E St and Parking Lot Entrance												
22. Arrowhead Ave and Rialto Ave												
23. H St and 5th St												
24. F St and Rialto Ave			2									
25. E St and 5th St			2							2		
26. E St and 4th St		2						2				
27. E St-Inland Center Dr and Mill St												

Intersection	PM PEAK HOUR PCE											
	NORTHBOUND			EASTBOUND			SOUTHBOUND			WESTBOUND		
	L	T	R	L	T	R	L	T	R	L	T	R
1. K St and 3rd St												
2. K St and 2nd St												
3. K St and Rialto Ave												
4. J St and 3rd St												
5. J St and 2nd St												
6. J St and Rialto Ave												
7. I St and 3rd St												
8. I St and 2nd St												
9. I St and Rialto Ave												
10. I-215 SB Off Ramp and 3rd St												
11. I-215 SB On Ramp and 2nd St												
12. I-215 NB On Ramp and 3rd St												
13. I-215 NB Ramps and 2nd St												
14. H St/G St and 3rd St												
15. G St and 2nd St												
16. G St and Rialto Ave												
17. G St and Congress St												
18. Parking Lot Entrance and Congress St												
19. E St and 2nd St		2						2				
20. E St and Rialto Ave				2				2				
21. E St and Parking Lot Entrance												
22. Arrowhead Ave and Rialto Ave												
23. H St and 5th St												
24. F St and Rialto Ave			2									
25. E St and 5th St			2							2		
26. E St and 4th St		2						2				
27. E St-Inland Center Dr and Mill St												

ROUTE 9: SAN BERNARDINO-REDLANDS-YUCAIPA (2 EB; 2 WB)

Intersection	AM PEAK HOUR PCE											
	NORTHBOUND			EASTBOUND			SOUTHBOUND			WESTBOUND		
	L	T	R	L	T	R	L	T	R	L	T	R
1. K St and 3rd St												
2. K St and 2nd St												
3. K St and Rialto Ave												
4. J St and 3rd St												
5. J St and 2nd St												
6. J St and Rialto Ave												
7. I St and 3rd St												
8. I St and 2nd St												
9. I St and Rialto Ave												
10. I-215 SB Off Ramp and 3rd St												
11. I-215 SB On Ramp and 2nd St												
12. I-215 NB On Ramp and 3rd St												
13. I-215 NB Ramps and 2nd St												
14. H St/G St and 3rd St												
15. G St and 2nd St												
16. G St and Rialto Ave												
17. G St and Congress St												
18. Parking Lot Entrance and Congress St												
19. E St and 2nd St		2						2				
20. E St and Rialto Ave				2				2				
21. E St and Parking Lot Entrance												
22. Arrowhead Ave and Rialto Ave												
23. H St and 5th St												
24. F St and Rialto Ave			2									
25. E St and 5th St			2							2		
26. E St and 4th St		2						2				
27. E St-Inland Center Dr and Mill St												

Intersection	PM PEAK HOUR PCE											
	NORTHBOUND			EASTBOUND			SOUTHBOUND			WESTBOUND		
	L	T	R	L	T	R	L	T	R	L	T	R
1. K St and 3rd St												
2. K St and 2nd St												
3. K St and Rialto Ave												
4. J St and 3rd St												
5. J St and 2nd St												
6. J St and Rialto Ave												
7. I St and 3rd St												
8. I St and 2nd St												
9. I St and Rialto Ave												
10. I-215 SB Off Ramp and 3rd St												
11. I-215 SB On Ramp and 2nd St												
12. I-215 NB On Ramp and 3rd St												
13. I-215 NB Ramps and 2nd St												
14. H St/G St and 3rd St												
15. G St and 2nd St												
16. G St and Rialto Ave												
17. G St and Congress St												
18. Parking Lot Entrance and Congress St												
19. E St and 2nd St		2						2				
20. E St and Rialto Ave				2				2				
21. E St and Parking Lot Entrance												
22. Arrowhead Ave and Rialto Ave												
23. H St and 5th St												
24. F St and Rialto Ave			2									
25. E St and 5th St			2							2		
26. E St and 4th St		2						2				
27. E St-Inland Center Dr and Mill St												

ROUTE 10: FONTANA-BASELINE-SAN BERNARDINO (4 EB; 4 WB)

Intersection	AM PEAK HOUR PCE											
	NORTHBOUND			EASTBOUND			SOUTHBOUND			WESTBOUND		
	L	T	R	L	T	R	L	T	R	L	T	R
1. K St and 3rd St												
2. K St and 2nd St												
3. K St and Rialto Ave												
4. J St and 3rd St												
5. J St and 2nd St												
6. J St and Rialto Ave												
7. I St and 3rd St												
8. I St and 2nd St												
9. I St and Rialto Ave												
10. I-215 SB Off Ramp and 3rd St												
11. I-215 SB On Ramp and 2nd St												
12. I-215 NB On Ramp and 3rd St												
13. I-215 NB Ramps and 2nd St												
14. H St/G St and 3rd St		4						4				
15. G St and 2nd St		4						4				
16. G St and Rialto Ave							4					4
17. G St and Congress St												
18. Parking Lot Entrance and Congress St												
19. E St and 2nd St												
20. E St and Rialto Ave												
21. E St and Parking Lot Entrance												
22. Arrowhead Ave and Rialto Ave												
23. H St and 5th St		4						4				
24. F St and Rialto Ave	4					4						
25. E St and 5th St												
26. E St and 4th St												
27. E St-Inland Center Dr and Mill St												

Intersection	PM PEAK HOUR PCE											
	NORTHBOUND			EASTBOUND			SOUTHBOUND			WESTBOUND		
	L	T	R	L	T	R	L	T	R	L	T	R
1. K St and 3rd St												
2. K St and 2nd St												
3. K St and Rialto Ave												
4. J St and 3rd St												
5. J St and 2nd St												
6. J St and Rialto Ave												
7. I St and 3rd St												
8. I St and 2nd St												
9. I St and Rialto Ave												
10. I-215 SB Off Ramp and 3rd St												
11. I-215 SB On Ramp and 2nd St												
12. I-215 NB On Ramp and 3rd St												
13. I-215 NB Ramps and 2nd St												
14. H St/G St and 3rd St		4						4				
15. G St and 2nd St		4						4				
16. G St and Rialto Ave							4					4
17. G St and Congress St												
18. Parking Lot Entrance and Congress St												
19. E St and 2nd St												
20. E St and Rialto Ave												
21. E St and Parking Lot Entrance												
22. Arrowhead Ave and Rialto Ave												
23. H St and 5th St		4						4				
24. F St and Rialto Ave	4					4						
25. E St and 5th St												
26. E St and 4th St												
27. E St-Inland Center Dr and Mill St												

ROUTE 11: SAN BERNARDINO-MUSCOY-CAL STATE (2 NB; 2 SB)

Intersection	AM PEAK HOUR PCE											
	NORTHBOUND			EASTBOUND			SOUTHBOUND			WESTBOUND		
	L	T	R	L	T	R	L	T	R	L	T	R
1. K St and 3rd St												
2. K St and 2nd St												
3. K St and Rialto Ave												
4. J St and 3rd St												
5. J St and 2nd St												
6. J St and Rialto Ave												
7. I St and 3rd St												
8. I St and 2nd St												
9. I St and Rialto Ave												
10. I-215 SB Off Ramp and 3rd St												
11. I-215 SB On Ramp and 2nd St												
12. I-215 NB On Ramp and 3rd St												
13. I-215 NB Ramps and 2nd St												
14. H St/G St and 3rd St		2						2				
15. G St and 2nd St		2						2				
16. G St and Rialto Ave							2					2
17. G St and Congress St												
18. Parking Lot Entrance and Congress St												
19. E St and 2nd St												
20. E St and Rialto Ave												
21. E St and Parking Lot Entrance												
22. Arrowhead Ave and Rialto Ave												
23. H St and 5th St		2						2				
24. F St and Rialto Ave	2					2						
25. E St and 5th St												
26. E St and 4th St												
27. E St-Inland Center Dr and Mill St												

Intersection	PM PEAK HOUR PCE											
	NORTHBOUND			EASTBOUND			SOUTHBOUND			WESTBOUND		
	L	T	R	L	T	R	L	T	R	L	T	R
1. K St and 3rd St												
2. K St and 2nd St												
3. K St and Rialto Ave												
4. J St and 3rd St												
5. J St and 2nd St												
6. J St and Rialto Ave												
7. I St and 3rd St												
8. I St and 2nd St												
9. I St and Rialto Ave												
10. I-215 SB Off Ramp and 3rd St												
11. I-215 SB On Ramp and 2nd St												
12. I-215 NB On Ramp and 3rd St												
13. I-215 NB Ramps and 2nd St												
14. H St/G St and 3rd St		2						2				
15. G St and 2nd St		2						2				
16. G St and Rialto Ave							2					2
17. G St and Congress St												
18. Parking Lot Entrance and Congress St												
19. E St and 2nd St												
20. E St and Rialto Ave												
21. E St and Parking Lot Entrance												
22. Arrowhead Ave and Rialto Ave												
23. H St and 5th St		2						2				
24. F St and Rialto Ave	2					2						
25. E St and 5th St												
26. E St and 4th St												
27. E St-Inland Center Dr and Mill St												

ROUTE 14: FONTANA-FOOTHILL-SAN BERNARDINO (8 EB; 8 WB)

Intersection	AM PEAK HOUR PCE											
	NORTHBOUND			EASTBOUND			SOUTHBOUND			WESTBOUND		
	L	T	R	L	T	R	L	T	R	L	T	R
1. K St and 3rd St												
2. K St and 2nd St												
3. K St and Rialto Ave												
4. J St and 3rd St												
5. J St and 2nd St												
6. J St and Rialto Ave												
7. I St and 3rd St												
8. I St and 2nd St												
9. I St and Rialto Ave												
10. I-215 SB Off Ramp and 3rd St												
11. I-215 SB On Ramp and 2nd St												
12. I-215 NB On Ramp and 3rd St												
13. I-215 NB Ramps and 2nd St												
14. H St/G St and 3rd St												
15. G St and 2nd St												
16. G St and Rialto Ave												
17. G St and Congress St												
18. Parking Lot Entrance and Congress St												
19. E St and 2nd St		8						8				
20. E St and Rialto Ave				8				8				
21. E St and Parking Lot Entrance												
22. Arrowhead Ave and Rialto Ave												
23. H St and 5th St					8						8	
24. F St and Rialto Ave			8									
25. E St and 5th St	8					8						
26. E St and 4th St		8						8				
27. E St-Inland Center Dr and Mill St												

Intersection	PM PEAK HOUR PCE											
	NORTHBOUND			EASTBOUND			SOUTHBOUND			WESTBOUND		
	L	T	R	L	T	R	L	T	R	L	T	R
1. K St and 3rd St												
2. K St and 2nd St												
3. K St and Rialto Ave												
4. J St and 3rd St												
5. J St and 2nd St												
6. J St and Rialto Ave												
7. I St and 3rd St												
8. I St and 2nd St												
9. I St and Rialto Ave												
10. I-215 SB Off Ramp and 3rd St												
11. I-215 SB On Ramp and 2nd St												
12. I-215 NB On Ramp and 3rd St												
13. I-215 NB Ramps and 2nd St												
14. H St/G St and 3rd St												
15. G St and 2nd St												
16. G St and Rialto Ave												
17. G St and Congress St												
18. Parking Lot Entrance and Congress St												
19. E St and 2nd St		8						8				
20. E St and Rialto Ave				8				8				
21. E St and Parking Lot Entrance												
22. Arrowhead Ave and Rialto Ave												
23. H St and 5th St					8						8	
24. F St and Rialto Ave			8									
25. E St and 5th St	8					8						
26. E St and 4th St		8						8				
27. E St-Inland Center Dr and Mill St												

ROUTE 15: FONTANA-SAN BERNARDINO/HIGHLAND-REDLANDS (4 EB; 4 WB)

Intersection	AM PEAK HOUR PCE											
	NORTHBOUND			EASTBOUND			SOUTHBOUND			WESTBOUND		
	L	T	R	L	T	R	L	T	R	L	T	R
1. K St and 3rd St												
2. K St and 2nd St												
3. K St and Rialto Ave												
4. J St and 3rd St												
5. J St and 2nd St												
6. J St and Rialto Ave												
7. I St and 3rd St												
8. I St and 2nd St												
9. I St and Rialto Ave												
10. I-215 SB Off Ramp and 3rd St												
11. I-215 SB On Ramp and 2nd St												
12. I-215 NB On Ramp and 3rd St												
13. I-215 NB Ramps and 2nd St												
14. H St/G St and 3rd St			4							4		
15. G St and 2nd St		4						4				
16. G St and Rialto Ave							4					4
17. G St and Congress St												
18. Parking Lot Entrance and Congress St												
19. E St and 2nd St												
20. E St and Rialto Ave	4					4						
21. E St and Parking Lot Entrance		4						4				
22. Arrowhead Ave and Rialto Ave												
23. H St and 5th St												
24. F St and Rialto Ave	4		4			4				4		
25. E St and 5th St					4						4	
26. E St and 4th St												
27. E St-Inland Center Dr and Mill St				4					4			

Intersection	PM PEAK HOUR PCE											
	NORTHBOUND			EASTBOUND			SOUTHBOUND			WESTBOUND		
	L	T	R	L	T	R	L	T	R	L	T	R
1. K St and 3rd St												
2. K St and 2nd St												
3. K St and Rialto Ave												
4. J St and 3rd St												
5. J St and 2nd St												
6. J St and Rialto Ave												
7. I St and 3rd St												
8. I St and 2nd St												
9. I St and Rialto Ave												
10. I-215 SB Off Ramp and 3rd St												
11. I-215 SB On Ramp and 2nd St												
12. I-215 NB On Ramp and 3rd St												
13. I-215 NB Ramps and 2nd St												
14. H St/G St and 3rd St			4							4		
15. G St and 2nd St		4						4				
16. G St and Rialto Ave							4					4
17. G St and Congress St												
18. Parking Lot Entrance and Congress St												
19. E St and 2nd St												
20. E St and Rialto Ave	4					4						
21. E St and Parking Lot Entrance		4						4				
22. Arrowhead Ave and Rialto Ave												
23. H St and 5th St												
24. F St and Rialto Ave	4		4			4				4		
25. E St and 5th St					4						4	
26. E St and 4th St												
27. E St-Inland Center Dr and Mill St				4					4			

ROUTE 215: SAN BERNARDINO-RIVERSIDE (6/4 NB; 6/6 SB)

Intersection	AM PEAK HOUR PCE											
	NORTHBOUND			EASTBOUND			SOUTHBOUND			WESTBOUND		
	L	T	R	L	T	R	L	T	R	L	T	R
1. K St and 3rd St												
2. K St and 2nd St												
3. K St and Rialto Ave												
4. J St and 3rd St												
5. J St and 2nd St												
6. J St and Rialto Ave												
7. I St and 3rd St												
8. I St and 2nd St												
9. I St and Rialto Ave												
10. I-215 SB Off Ramp and 3rd St												
11. I-215 SB On Ramp and 2nd St										6		
12. I-215 NB On Ramp and 3rd St												
13. I-215 NB Ramps and 2nd St			6								6	
14. H St/G St and 3rd St												
15. G St and 2nd St	6					6						
16. G St and Rialto Ave							6					6
17. G St and Congress St												
18. Parking Lot Entrance and Congress St												
19. E St and 2nd St												
20. E St and Rialto Ave												
21. E St and Parking Lot Entrance												
22. Arrowhead Ave and Rialto Ave												
23. H St and 5th St												
24. F St and Rialto Ave	6					6						
25. E St and 5th St												
26. E St and 4th St												
27. E St-Inland Center Dr and Mill St												

Intersection	PM PEAK HOUR PCE											
	NORTHBOUND			EASTBOUND			SOUTHBOUND			WESTBOUND		
	L	T	R	L	T	R	L	T	R	L	T	R
1. K St and 3rd St												
2. K St and 2nd St												
3. K St and Rialto Ave												
4. J St and 3rd St												
5. J St and 2nd St												
6. J St and Rialto Ave												
7. I St and 3rd St												
8. I St and 2nd St												
9. I St and Rialto Ave												
10. I-215 SB Off Ramp and 3rd St												
11. I-215 SB On Ramp and 2nd St										6		
12. I-215 NB On Ramp and 3rd St												
13. I-215 NB Ramps and 2nd St			4								6	
14. H St/G St and 3rd St												
15. G St and 2nd St	6					4						
16. G St and Rialto Ave							4					6
17. G St and Congress St												
18. Parking Lot Entrance and Congress St												
19. E St and 2nd St												
20. E St and Rialto Ave												
21. E St and Parking Lot Entrance												
22. Arrowhead Ave and Rialto Ave												
23. H St and 5th St												
24. F St and Rialto Ave	6					4						
25. E St and 5th St												
26. E St and 4th St												
27. E St-Inland Center Dr and Mill St												

MARTA OTM: BIG BEAR VALLEY-SAN BERNARDINO (2 EB; 0 WB)

Intersection	AM PEAK HOUR PCE											
	NORTHBOUND			EASTBOUND			SOUTHBOUND			WESTBOUND		
	L	T	R	L	T	R	L	T	R	L	T	R
1. K St and 3rd St		2										
2. K St and 2nd St												2
3. K St and Rialto Ave												
4. J St and 3rd St						2						
5. J St and 2nd St							2				2	
6. J St and Rialto Ave												
7. I St and 3rd St												
8. I St and 2nd St					2						2	
9. I St and Rialto Ave												
10. I-215 SB Off Ramp and 3rd St												
11. I-215 SB On Ramp and 2nd St					2						2	
12. I-215 NB On Ramp and 3rd St												
13. I-215 NB Ramps and 2nd St					2						2	
14. H St/G St and 3rd St			2									
15. G St and 2nd St	2			2								
16. G St and Rialto Ave												2
17. G St and Congress St												
18. Parking Lot Entrance and Congress St												
19. E St and 2nd St												
20. E St and Rialto Ave												
21. E St and Parking Lot Entrance												
22. Arrowhead Ave and Rialto Ave												
23. H St and 5th St												
24. F St and Rialto Ave	2											
25. E St and 5th St												
26. E St and 4th St					2							
27. E St-Inland Center Dr and Mill St												

Intersection	PM PEAK HOUR PCE											
	NORTHBOUND			EASTBOUND			SOUTHBOUND			WESTBOUND		
	L	T	R	L	T	R	L	T	R	L	T	R
1. K St and 3rd St		2										
2. K St and 2nd St												2
3. K St and Rialto Ave												
4. J St and 3rd St						2						
5. J St and 2nd St							2				2	
6. J St and Rialto Ave												
7. I St and 3rd St												
8. I St and 2nd St					2						2	
9. I St and Rialto Ave												
10. I-215 SB Off Ramp and 3rd St												
11. I-215 SB On Ramp and 2nd St					2						2	
12. I-215 NB On Ramp and 3rd St												
13. I-215 NB Ramps and 2nd St					2						2	
14. H St/G St and 3rd St			2									
15. G St and 2nd St	2			2								
16. G St and Rialto Ave												2
17. G St and Congress St												
18. Parking Lot Entrance and Congress St												
19. E St and 2nd St												
20. E St and Rialto Ave												
21. E St and Parking Lot Entrance												
22. Arrowhead Ave and Rialto Ave												
23. H St and 5th St												
24. F St and Rialto Ave	2											
25. E St and 5th St												
26. E St and 4th St					2							
27. E St-Inland Center Dr and Mill St												

MARTA OTM: LAKE ARROWHEAD-SAN BERNARDINO (2 EB; 0 WB)

Intersection	AM PEAK HOUR PCE											
	NORTHBOUND			EASTBOUND			SOUTHBOUND			WESTBOUND		
	L	T	R	L	T	R	L	T	R	L	T	R
1. K St and 3rd St		2										
2. K St and 2nd St												2
3. K St and Rialto Ave												
4. J St and 3rd St						2						
5. J St and 2nd St							2				2	
6. J St and Rialto Ave												
7. I St and 3rd St												
8. I St and 2nd St					2						2	
9. I St and Rialto Ave												
10. I-215 SB Off Ramp and 3rd St												
11. I-215 SB On Ramp and 2nd St					2						2	
12. I-215 NB On Ramp and 3rd St												
13. I-215 NB Ramps and 2nd St					2						2	
14. H St/G St and 3rd St			2									
15. G St and 2nd St	2			2								
16. G St and Rialto Ave												2
17. G St and Congress St												
18. Parking Lot Entrance and Congress St												
19. E St and 2nd St												
20. E St and Rialto Ave												
21. E St and Parking Lot Entrance												
22. Arrowhead Ave and Rialto Ave												
23. H St and 5th St												
24. F St and Rialto Ave	2											
25. E St and 5th St												
26. E St and 4th St					2							
27. E St-Inland Center Dr and Mill St												

Intersection	PM PEAK HOUR PCE											
	NORTHBOUND			EASTBOUND			SOUTHBOUND			WESTBOUND		
	L	T	R	L	T	R	L	T	R	L	T	R
1. K St and 3rd St		2										
2. K St and 2nd St												2
3. K St and Rialto Ave												
4. J St and 3rd St						2						
5. J St and 2nd St							2				2	
6. J St and Rialto Ave												
7. I St and 3rd St												
8. I St and 2nd St					2						2	
9. I St and Rialto Ave												
10. I-215 SB Off Ramp and 3rd St												
11. I-215 SB On Ramp and 2nd St					2						2	
12. I-215 NB On Ramp and 3rd St												
13. I-215 NB Ramps and 2nd St					2						2	
14. H St/G St and 3rd St			2									
15. G St and 2nd St	2			2								
16. G St and Rialto Ave												2
17. G St and Congress St												
18. Parking Lot Entrance and Congress St												
19. E St and 2nd St												
20. E St and Rialto Ave												
21. E St and Parking Lot Entrance												
22. Arrowhead Ave and Rialto Ave												
23. H St and 5th St												
24. F St and Rialto Ave	2											
25. E St and 5th St												
26. E St and 4th St					2							
27. E St-Inland Center Dr and Mill St												

sbX Expansion (12 NB; 12 SB)

Intersection	AM PEAK HOUR PCE											
	NORTHBOUND			EASTBOUND			SOUTHBOUND			WESTBOUND		
	L	T	R	L	T	R	L	T	R	L	T	R
1. K St and 3rd St												
2. K St and 2nd St												
3. K St and Rialto Ave												
4. J St and 3rd St												
5. J St and 2nd St												
6. J St and Rialto Ave												
7. I St and 3rd St												
8. I St and 2nd St												
9. I St and Rialto Ave												
10. I-215 SB Off Ramp and 3rd St												
11. I-215 SB On Ramp and 2nd St												
12. I-215 NB On Ramp and 3rd St												
13. I-215 NB Ramps and 2nd St												
14. H St/G St and 3rd St												
15. G St and 2nd St												
16. G St and Rialto Ave												
17. G St and Congress St												
18. Parking Lot Entrance and Congress St												
19. E St and 2nd St		12						12				
20. E St and Rialto Ave	12			12		12		12				
21. E St and Parking Lot Entrance		12						12				
22. Arrowhead Ave and Rialto Ave												
23. H St and 5th St												
24. F St and Rialto Ave			24							12		
25. E St and 5th St		12						12				
26. E St and 4th St		12						12				
27. E St-Inland Center Dr and Mill St		12						12				

Intersection	PM PEAK HOUR PCE											
	NORTHBOUND			EASTBOUND			SOUTHBOUND			WESTBOUND		
	L	T	R	L	T	R	L	T	R	L	T	R
1. K St and 3rd St												
2. K St and 2nd St												
3. K St and Rialto Ave												
4. J St and 3rd St												
5. J St and 2nd St												
6. J St and Rialto Ave												
7. I St and 3rd St												
8. I St and 2nd St												
9. I St and Rialto Ave												
10. I-215 SB Off Ramp and 3rd St												
11. I-215 SB On Ramp and 2nd St												
12. I-215 NB On Ramp and 3rd St												
13. I-215 NB Ramps and 2nd St												
14. H St/G St and 3rd St												
15. G St and 2nd St												
16. G St and Rialto Ave												
17. G St and Congress St												
18. Parking Lot Entrance and Congress St												
19. E St and 2nd St		12						12				
20. E St and Rialto Ave	12			12		12		12				
21. E St and Parking Lot Entrance		12						12				
22. Arrowhead Ave and Rialto Ave												
23. H St and 5th St												
24. F St and Rialto Ave			24							12		
25. E St and 5th St		12						12				
26. E St and 4th St		12						12				
27. E St-Inland Center Dr and Mill St		12						12				

Intersection	AM PEAK HOUR PCE											
	NORTHBOUND			EASTBOUND			SOUTHBOUND			WESTBOUND		
	L	T	R	L	T	R	L	T	R	L	T	R
1. K St and 3rd St	0	4	0	0	0	8	0	8	0	0	0	0
2. K St and 2nd St	0	0	0	0	0	0	8	0	8	0	0	4
3. K St and Rialto Ave	0	0	0	0	0	0	0	0	0	0	0	0
4. J St and 3rd St	8	0	0	0	0	4	0	0	0	0	0	0
5. J St and 2nd St	0	0	0	0	8	0	4	0	0	0	4	8
6. J St and Rialto Ave	0	0	0	0	0	0	0	0	0	0	0	0
7. I St and 3rd St	0	0	0	0	0	0	0	0	0	0	0	0
8. I St and 2nd St	0	0	0	0	12	0	0	0	0	0	12	0
9. I St and Rialto Ave	0	0	0	0	0	0	0	0	0	0	0	0
10. I-215 SB Off Ramp and 3rd St	0	0	0	0	0	0	0	0	0	0	0	0
11. I-215 SB On Ramp and 2nd St	0	0	0	0	12	0	0	0	0	6	12	0
12. I-215 NB On Ramp and 3rd St	0	0	0	0	0	0	0	0	0	0	0	0
13. I-215 NB Ramps and 2nd St	0	0	6	0	12	0	0	0	0	0	18	0
14. H St/G St and 3rd St	0	20	12	0	0	0	0	24	0	4	0	0
15. G St and 2nd St	18	28	0	4	0	14	0	28	0	0	0	0
16. G St and Rialto Ave	0	0	0	0	0	0	42	0	0	0	0	46
17. G St and Congress St	0	0	0	0	0	0	0	0	0	0	0	0
18. Parking Lot Entrance and Congress St	0	0	0	0	0	0	0	0	0	0	0	0
19. E St and 2nd St	0	42	4	0	0	0	0	42	0	4	0	0
20. E St and Rialto Ave	24	0	0	46	0	24	0	46	0	0	0	0
21. E St and Parking Lot Entrance	0	24	0	0	0	0	0	24	0	0	0	0
22. Arrowhead Ave and Rialto Ave	0	0	0	0	0	0	0	0	0	0	0	0
23. H St and 5th St	6	14	0	0	8	6	0	14	0	4	8	0
24. F St and Rialto Ave	46	0	70	0	0	42	0	0	0	24	0	0
25. E St and 5th St	8	12	22	0	4	8	0	12	0	22	4	0
26. E St and 4th St	0	42	0	0	4	0	0	42	0	0	0	0
27. E St-Inland Center Dr and Mill St	0	20	0	4	0	0	0	20	4	0	0	0

Intersection	PM PEAK HOUR PCE											
	NORTHBOUND			EASTBOUND			SOUTHBOUND			WESTBOUND		
	L	T	R	L	T	R	L	T	R	L	T	R
1. K St and 3rd St	0	4	0	0	0	8	0	8	0	0	0	0
2. K St and 2nd St	0	0	0	0	0	0	8	0	8	0	0	4
3. K St and Rialto Ave	0	0	0	0	0	0	0	0	0	0	0	0
4. J St and 3rd St	8	0	0	0	0	4	0	0	0	0	0	0
5. J St and 2nd St	0	0	0	0	8	0	4	0	0	0	4	8
6. J St and Rialto Ave	0	0	0	0	0	0	0	0	0	0	0	0
7. I St and 3rd St	0	0	0	0	0	0	0	0	0	0	0	0
8. I St and 2nd St	0	0	0	0	12	0	0	0	0	0	12	0
9. I St and Rialto Ave	0	0	0	0	0	0	0	0	0	0	0	0
10. I-215 SB Off Ramp and 3rd St	0	0	0	0	0	0	0	0	0	0	0	0
11. I-215 SB On Ramp and 2nd St	0	0	0	0	12	0	0	0	0	6	12	0
12. I-215 NB On Ramp and 3rd St	0	0	0	0	0	0	0	0	0	0	0	0
13. I-215 NB Ramps and 2nd St	0	0	4	0	12	0	0	0	0	0	18	0
14. H St/G St and 3rd St	0	22	12	0	0	0	0	26	0	4	0	0
15. G St and 2nd St	18	30	0	4	0	12	0	30	0	0	0	0
16. G St and Rialto Ave	0	0	0	0	0	0	34	0	0	0	0	48
17. G St and Congress St	0	0	0	0	0	0	8	0	0	0	0	0
18. Parking Lot Entrance and Congress St	0	0	0	0	0	0	0	0	0	0	0	0
19. E St and 2nd St	0	44	4	0	0	0	0	44	0	4	0	0
20. E St and Rialto Ave	24	0	0	48	0	24	0	48	0	0	0	0
21. E St and Parking Lot Entrance	0	24	0	0	0	0	0	24	0	0	0	0
22. Arrowhead Ave and Rialto Ave	0	0	0	0	0	0	0	0	0	0	0	0
23. H St and 5th St	8	14	0	0	8	8	0	14	0	4	8	0
24. F St and Rialto Ave	48	0	72	0	0	42	0	0	0	24	0	0
25. E St and 5th St	8	12	24	0	4	8	0	12	0	24	4	0
26. E St and 4th St	0	44	0	0	4	0	0	44	0	0	0	0
27. E St-Inland Center Dr and Mill St	0	20	0	4	0	0	0	20	4	0	0	0

2035 AM TURNING MOVEMENT VOLUMES												
FORECAST YEAR NO BUILD												
	NORTHBOUND			EASTBOUND			SOUTHBOUND			WESTBOUND		
Intersection	L	T	R	L	T	R	L	T	R	L	T	R
1. K St and 3rd St	11	9	27	1	190	1	0	0	0	41	78	1
2. K St and 2nd St	23	5	60	12	416	20	11	33	16	50	270	28
3. K St and Rialto Ave	49	53	134	33	531	67	5	60	38	153	205	2
4. J St and 3rd St	6	0	6	0	222	20	0	0	0	12	124	0
5. J St and 2nd St	20	1	106	10	509	36	17	10	0	18	354	23
6. J St and Rialto Ave	25	9	5	40	674	5	15	2	3	48	368	60
7. I St and 3rd St	INTERSECTION DOESN'T EXIST											
8. I St and 2nd St	12	31	113	29	623	34	19	16	31	234	348	7
9. I St and Rialto Ave	12	69	67	110	522	25	124	131	144	39	289	16
10. I-215 SB Off Ramp and 3rd St	0	0	0	0	235	10	563	417	18	167	72	0
11. I-215 SB On Ramp and 2nd St	0	0	0	0	719	36	195	12	379	278	210	0
12. I-215 NB On Ramp and 3rd St	2	278	29	242	558	0	0	0	0	0	236	154
13. I-215 NB Off Ramp and 2nd St	81	33	1114	115	800	0	0	0	0	0	419	159
14. H St/G St and 3rd St	0	80	214	41	466	174	26	256	202	22	202	2
15. G St and 2nd St	148	191	85	139	1546	181	150	250	38	83	432	77
16. G St and Rialto Ave	15	64	49	33	531	26	196	144	57	55	260	75
17. G St and Congress St	0	126	0	7	0	4	0	255	6	0	0	0
18. Parking Lot Entrance and Congress St	INTERSECTION DOESN'T EXIST											
19. E St and 2nd St	83	210	75	269	940	153	18	469	67	74	429	14
20. E St and Rialto Ave	19	271	74	38	604	41	129	370	39	27	265	57
21. E St and Parking Lot Entrance	INTERSECTION DOESN'T EXIST											
22. Arrowhead Ave and Rialto Ave	9	219	25	64	277	19	61	349	49	39	243	41
23. H St and 5th St	111	167	12	185	1174	407	22	138	114	10	315	15
24. F St and Rialto Ave	0	0	0	44	434	0	27	0	34	0	281	41
25. E St and 5th St	47	236	64	55	915	108	77	371	34	55	289	28
26. E St and 4th St	16	341	100	10	88	23	31	446	34	8	27	19
27. E St-Inland Center Dr and Mill St												

2035 PM TURNING MOVEMENT VOLUMES												
FORECAST YEAR NO BUILD												
	NORTHBOUND			EASTBOUND			SOUTHBOUND			WESTBOUND		
Intersection	L	T	R	L	T	R	L	T	R	L	T	R
1. K St and 3rd St	8	2	27	2	299	99	0	0	0	61	143	1
2. K St and 2nd St	38	8	53	19	464	15	93	42	27	62	375	17
3. K St and Rialto Ave	49	55	173	8	393	53	6	69	32	145	593	16
4. J St and 3rd St	5	0	32	0	346	30	0	0	0	36	190	0
5. J St and 2nd St	21	1	76	10	640	31	41	16	5	43	555	29
6. J St and Rialto Ave	26	6	41	6	586	5	40	4	2	75	655	60
7. I St and 3rd St	INTERSECTION DOESN'T EXIST											
8. I St and 2nd St	56	20	197	17	517	45	8	23	8	274	573	13
9. I St and Rialto Ave	7	197	45	131	450	9	102	116	169	38	594	65
10. I-215 SB Off Ramp and 3rd St	0	0	0	0	371	32	340	354	75	115	132	0
11. I-215 SB On Ramp and 2nd St	0	0	0	0	565	157	105	32	365	886	499	0
12. I-215 NB On Ramp and 3rd St	7	433	160	302	412	0	0	0	0	0	246	586
13. I-215 NB Off Ramp and 2nd St	21	6	400	150	531	0	0	0	0	0	1363	444
14. H St/G St and 3rd St	178	296	91	91	187	157	7	162	98	100	401	6
15. G St and 2nd St	390	242	52	198	738	55	72	170	163	82	1473	104
16. G St and Rialto Ave	63	277	61	24	441	12	132	118	54	48	649	274
17. G St and Congress St	0	257	0	4	0	4	0	241	0	0	0	0
18. Parking Lot Entrance and Congress St	INTERSECTION DOESN'T EXIST											
19. E St and 2nd St	141	439	130	157	627	65	41	336	205	124	1168	33
20. E St and Rialto Ave	89	685	69	32	437	89	48	442	62	117	785	53
21. E St and Parking Lot Entrance	INTERSECTION DOESN'T EXIST											
22. Arrowhead Ave and Rialto Ave	51	542	132	22	396	24	50	291	39	50	480	52
23. H St and 5th St	429	518	15	271	701	340	15	134	244	19	1266	49
24. F St and Rialto Ave	0	0	0	43	420	0	36	0	88	0	665	49
25. E St and 5th St	132	452	72	57	561	68	68	332	75	72	929	60
26. E St and 4th St	57	586	82	19	80	65	10	457	51	34	169	57
27. E St-Inland Center Dr and Mill St												

2035 AM TURNING MOVEMENT VOLUMES												
K St and 3rd St Reconfiguration												
	NORTHBOUND			EASTBOUND			SOUTHBOUND			WESTBOUND		
Intersection	L	T	R	L	T	R	L	T	R	L	T	R
1. K St and 3rd St	0	19	-27	189	-190	0	0	41	78	-41	-78	-1
2. K St and 2nd St												
3. K St and Rialto Ave												
4. J St and 3rd St												
5. J St and 2nd St												
6. J St and Rialto Ave												
7. I St and 3rd St												
8. I St and 2nd St												
9. I St and Rialto Ave												
10. I-215 SB Off Ramp and 3rd St												
11. I-215 SB On Ramp and 2nd St												
12. I-215 NB On Ramp and 3rd St												
13. I-215 NB Off Ramp and 2nd St												
14. H St/G St and 3rd St												
15. G St and 2nd St												
16. G St and Rialto Ave												
17. G St and Congress St												
18. Parking Lot Entrance and Congress St												
19. E St and 2nd St												
20. E St and Rialto Ave												
21. E St and Parking Lot Entrance												
22. Arrowhead Ave and Rialto Ave												
23. H St and 5th St												
24. F St and Rialto Ave												
25. E St and 5th St												
26. E St and 4th St												
27. E St-Inland Center Dr and Mill St												

2035 PM TURNING MOVEMENT VOLUMES												
K St and 3rd St Reconfiguration												
	NORTHBOUND			EASTBOUND			SOUTHBOUND			WESTBOUND		
Intersection	L	T	R	L	T	R	L	T	R	L	T	R
1. K St and 3rd St	0	25	-27	297	-299	0	0	61	143	-61	-143	-1
2. K St and 2nd St												
3. K St and Rialto Ave												
4. J St and 3rd St												
5. J St and 2nd St												
6. J St and Rialto Ave												
7. I St and 3rd St												
8. I St and 2nd St												
9. I St and Rialto Ave												
10. I-215 SB Off Ramp and 3rd St												
11. I-215 SB On Ramp and 2nd St												
12. I-215 NB On Ramp and 3rd St												
13. I-215 NB Off Ramp and 2nd St												
14. H St/G St and 3rd St												
15. G St and 2nd St												
16. G St and Rialto Ave												
17. G St and Congress St												
18. Parking Lot Entrance and Congress St												
19. E St and 2nd St												
20. E St and Rialto Ave												
21. E St and Parking Lot Entrance												
22. Arrowhead Ave and Rialto Ave												
23. H St and 5th St												
24. F St and Rialto Ave												
25. E St and 5th St												
26. E St and 4th St												
27. E St-Inland Center Dr and Mill St												

2035 AM TURNING MOVEMENT VOLUMES												
FORECAST YEAR BUILD - I STREET CLOSURE												
	NORTHBOUND			EASTBOUND			SOUTHBOUND			WESTBOUND		
Intersection	L	T	R	L	T	R	L	T	R	L	T	R
1. K St and 3rd St												
2. K St and 2nd St			90							66		
3. K St and Rialto Ave	7	35	34	55	-68	13		66			5	
4. J St and 3rd St												
5. J St and 2nd St			89		90					189	66	
6. J St and Rialto Ave	5	34	33	55	-101	12	124	65		39		
7. I St and 3rd St												
8. I St and 2nd St	26	-30	-109	38	136					-225	225	
9. I St and Rialto Ave	-12	-69	-67	-110	191	-25	-124	-131		-39	39	
10. I-215 SB Off Ramp and 3rd St												
11. I-215 SB On Ramp and 2nd St												
12. I-215 NB On Ramp and 3rd St												
13. I-215 NB Off Ramp and 2nd St												
14. H St/G St and 3rd St												
15. G St and 2nd St												
16. G St and Rialto Ave												
17. G St and Congress St												
18. Parking Lot Entrance and Congress St												
19. E St and 2nd St												
20. E St and Rialto Ave												
21. E St and Parking Lot Entrance												
22. Arrowhead Ave and Rialto Ave												
23. H St and 5th St												
24. F St and Rialto Ave												
25. E St and 5th St												
26. E St and 4th St												
27. E St-Inland Center Dr and Mill St												

2035 PM TURNING MOVEMENT VOLUMES												
FORECAST YEAR BUILD - I STREET CLOSURE												
	NORTHBOUND			EASTBOUND			SOUTHBOUND			WESTBOUND		
Intersection	L	T	R	L	T	R	L	T	R	L	T	R
1. K St and 3rd St												
2. K St and 2nd St			139							58		
3. K St and Rialto Ave	4	86	23	53	-71	5		58			3	
4. J St and 3rd St												
5. J St and 2nd St			189		139					160	58	
6. J St and Rialto Ave	3	111	22	78	-117	4	102	58		38		
7. I St and 3rd St												
8. I St and 2nd St	-28	-19	-191	27	261					-218	218	
9. I St and Rialto Ave	-7	-197	-45	-131	147	-9	-102	-116		-38	38	
10. I-215 SB Off Ramp and 3rd St												
11. I-215 SB On Ramp and 2nd St												
12. I-215 NB On Ramp and 3rd St												
13. I-215 NB Off Ramp and 2nd St												
14. H St/G St and 3rd St												
15. G St and 2nd St												
16. G St and Rialto Ave												
17. G St and Congress St												
18. Parking Lot Entrance and Congress St												
19. E St and 2nd St												
20. E St and Rialto Ave												
21. E St and Parking Lot Entrance												
22. Arrowhead Ave and Rialto Ave												
23. H St and 5th St												
24. F St and Rialto Ave												
25. E St and 5th St												
26. E St and 4th St												
27. E St-Inland Center Dr and Mill St												

2035 AM TURNING MOVEMENT VOLUMES												
FORECAST YEAR BUILD (WITHOUT THE PARKING LOT/BUS/OFFICE TRIPS)												
	NORTHBOUND			EASTBOUND			SOUTHBOUND			WESTBOUND		
Intersection	L	T	R	L	T	R	L	T	R	L	T	R
1. K St and 3rd St	11	28	0	190	0	1	0	41	78	0	0	0
2. K St and 2nd St	23	5	150	12	416	20	11	33	16	116	270	28
3. K St and Rialto Ave	56	88	168	88	463	80	5	126	38	153	210	2
4. J St and 3rd St	6	0	6	0	222	20	0	0	0	12	124	0
5. J St and 2nd St	20	1	195	10	599	36	17	10	0	207	420	23
6. J St and Rialto Ave	30	43	38	95	573	17	139	67	3	87	368	60
7. I St and 3rd St												
8. I St and 2nd St	38	1	4	67	759	34	19	16	31	9	573	7
9. I St and Rialto Ave	0	0	0	0	713	0	0	0	144	0	328	16
10. I-215 SB Off Ramp and 3rd St	0	0	0	0	235	10	563	417	18	167	72	0
11. I-215 SB On Ramp and 2nd St	0	0	0	0	719	36	195	12	379	278	210	0
12. I-215 NB On Ramp and 3rd St	2	278	29	242	558	0	0	0	0	0	236	154
13. I-215 NB Off Ramp and 2nd St	81	33	1114	115	800	0	0	0	0	0	419	159
14. H St/G St and 3rd St	0	80	214	41	466	174	26	256	202	22	202	2
15. G St and 2nd St	148	191	85	139	1546	181	150	250	38	83	432	77
16. G St and Rialto Ave	15	64	49	33	531	26	196	144	57	55	260	75
17. G St and Congress St	0	126	20	7	0	4	0	255	6	20	0	0
18. Parking Lot Entrance and Congress St	20	0	0	0	0	20	0	0	0	0	0	0
19. E St and 2nd St	83	210	75	269	940	153	18	469	67	74	429	14
20. E St and Rialto Ave	19	271	74	38	604	41	129	370	39	27	265	57
21. E St and Parking Lot Entrance	0	0	0	0	0	0	0	0	0	0	0	0
22. Arrowhead Ave and Rialto Ave	9	219	25	64	277	19	61	349	49	39	243	41
23. H St and 5th St	111	167	12	185	1174	407	22	138	114	10	315	15
24. F St and Rialto Ave	0	0	0	44	434	0	27	0	34	0	281	41
25. E St and 5th St	47	236	64	55	915	108	77	371	34	55	289	28
26. E St and 4th St	16	341	100	10	88	23	31	446	34	8	27	19
27. E St-Inland Center Dr and Mill St	0	0	0	0	0	0	0	0	0	0	0	0

2035 PM TURNING MOVEMENT VOLUMES												
FORECAST YEAR BUILD (WITHOUT THE PARKING LOT/BUS/OFFICE TRIPS)												
	NORTHBOUND			EASTBOUND			SOUTHBOUND			WESTBOUND		
Intersection	L	T	R	L	T	R	L	T	R	L	T	R
1. K St and 3rd St	8	27	0	299	0	99	0	61	143	0	0	0
2. K St and 2nd St	38	8	192	19	464	15	93	42	27	120	375	17
3. K St and Rialto Ave	53	141	196	61	322	58	6	127	32	145	596	16
4. J St and 3rd St	5	0	32	0	346	30	0	0	0	36	190	0
5. J St and 2nd St	21	1	265	10	779	31	41	16	5	203	613	29
6. J St and Rialto Ave	29	117	63	84	469	9	142	62	2	113	655	60
7. I St and 3rd St												
8. I St and 2nd St	28	1	6	44	778	45	8	23	8	56	791	13
9. I St and Rialto Ave	0	0	0	0	597	0	0	0	169	0	632	65
10. I-215 SB Off Ramp and 3rd St	0	0	0	0	371	32	340	354	75	115	132	0
11. I-215 SB On Ramp and 2nd St	0	0	0	0	565	157	105	32	365	886	499	0
12. I-215 NB On Ramp and 3rd St	7	433	160	302	412	0	0	0	0	0	246	586
13. I-215 NB Off Ramp and 2nd St	21	6	400	150	531	0	0	0	0	0	1363	444
14. H St/G St and 3rd St	178	296	91	91	187	157	7	162	98	100	401	6
15. G St and 2nd St	390	242	52	198	738	55	72	170	163	82	1473	104
16. G St and Rialto Ave	63	277	61	24	441	12	132	118	54	48	649	274
17. G St and Congress St	0	257	25	4	0	4	0	241	0	25	0	0
18. Parking Lot Entrance and Congress St	25	0	0	0	0	25	0	0	0	0	0	0
19. E St and 2nd St	141	439	130	157	627	65	41	336	205	124	1168	33
20. E St and Rialto Ave	89	685	69	32	437	89	48	442	62	117	785	53
21. E St and Parking Lot Entrance	0	0	0	0	0	0	0	0	0	0	0	0
22. Arrowhead Ave and Rialto Ave	51	542	132	22	396	24	50	291	39	50	480	52
23. H St and 5th St	429	518	15	271	701	340	15	134	244	19	1266	49
24. F St and Rialto Ave	0	0	0	43	420	0	36	0	88	0	665	49
25. E St and 5th St	132	452	72	57	561	68	68	332	75	72	929	60
26. E St and 4th St	57	586	82	19	80	65	10	457	51	34	169	57
27. E St-Inland Center Dr and Mill St	0	0	0	0	0	0	0	0	0	0	0	0

2035 AM TURNING MOVEMENT VOLUMES												
FORECAST YEAR BUILD - 3RD STREET CLOSURE												
	NORTHBOUND			EASTBOUND			SOUTHBOUND			WESTBOUND		
Intersection	L	T	R	L	T	R	L	T	R	L	T	R
1. K St and 3rd St		-25		-181				-39	-65			
2. K St and 2nd St		-2	2	-7	188			-26	-13	9	42	-16
3. K St and Rialto Ave									9		26	
4. J St and 3rd St	9		-6		-222	7				-12	-124	
5. J St and 2nd St				-1	200	7	19	-7		9	51	9
6. J St and Rialto Ave									9		17	
7. I St and 3rd St												
8. I St and 2nd St					219					17	69	
9. I St and Rialto Ave									17			
10. I-215 SB Off Ramp and 3rd St					-223	-10		17	-17	69	-69	
11. I-215 SB On Ramp and 2nd St					209	10		-10	86			
12. I-215 NB On Ramp and 3rd St		209		-209	-14							
13. I-215 NB Off Ramp and 2nd St				209								
14. H St/G St and 3rd St												
15. G St and 2nd St												
16. G St and Rialto Ave												
17. G St and Congress St												
18. Parking Lot Entrance and Congress St												
19. E St and 2nd St												
20. E St and Rialto Ave												
21. E St and Parking Lot Entrance												
22. Arrowhead Ave and Rialto Ave												
23. H St and 5th St												
24. F St and Rialto Ave												
25. E St and 5th St												
26. E St and 4th St												
27. E St-Inland Center Dr and Mill St												

2035 AM TURNING MOVEMENT VOLUMES												
FORECAST YEAR BUILD - 3RD STREET CLOSURE												
	NORTHBOUND			EASTBOUND			SOUTHBOUND			WESTBOUND		
Intersection	L	T	R	L	T	R	L	T	R	L	T	R
1. K St and 3rd St		-25		-284				-58	-116			
2. K St and 2nd St		-4	4	-11	295			-35	-23	20	98	-10
3. K St and Rialto Ave									20		59	
4. J St and 3rd St	20		-32		-346	23				-36	-190	
5. J St and 2nd St				-8	309	8	55	-8		20	118	20
6. J St and Rialto Ave									20		39	
7. I St and 3rd St												
8. I St and 2nd St					364					39	158	
9. I St and Rialto Ave									39			
10. I-215 SB Off Ramp and 3rd St					-353	-32		72	-72	125	-125	
11. I-215 SB On Ramp and 2nd St					332	32		-32	197			
12. I-215 NB On Ramp and 3rd St	2	287	43	-287	-66							
13. I-215 NB Off Ramp and 2nd St				332								
14. H St/G St and 3rd St												
15. G St and 2nd St												
16. G St and Rialto Ave												
17. G St and Congress St												
18. Parking Lot Entrance and Congress St												
19. E St and 2nd St												
20. E St and Rialto Ave												
21. E St and Parking Lot Entrance												
22. Arrowhead Ave and Rialto Ave												
23. H St and 5th St												
24. F St and Rialto Ave												
25. E St and 5th St												
26. E St and 4th St												
27. E St-Inland Center Dr and Mill St												

2035 AM TURNING MOVEMENT VOLUMES												
FORECAST YEAR BUILD - ADJUSTED (WITHOUT THE PARKING LOT/BUS/OFFICE TRIPS)												
	NORTHBOUND			EASTBOUND			SOUTHBOUND			WESTBOUND		
Intersection	L	T	R	L	T	R	L	T	R	L	T	R
1. K St and 3rd St	11	3	0	9	0	1	0	2	13	0	0	0
2. K St and 2nd St	23	3	152	5	604	20	11	7	3	125	312	12
3. K St and Rialto Ave	56	88	168	88	463	80	5	126	47	153	236	2
4. J St and 3rd St	15	0	0	0	0	27	0	0	0	0	0	0
5. J St and 2nd St	20	1	195	9	799	43	36	3	0	216	471	32
6. J St and Rialto Ave	30	43	38	95	573	17	139	67	12	87	385	60
7. I St and 3rd St												
8. I St and 2nd St	38	1	4	67	978	34	19	16	31	26	642	7
9. I St and Rialto Ave	0	0	0	0	713	0	0	0	161	0	328	16
10. I-215 SB Off Ramp and 3rd St	0	0	0	0	12	0	563	434	1	236	3	0
11. I-215 SB On Ramp and 2nd St	0	0	0	0	928	46	195	2	465	278	210	0
12. I-215 NB On Ramp and 3rd St	2	487	29	33	544	0	0	0	0	0	236	154
13. I-215 NB Off Ramp and 2nd St	81	33	1114	324	800	0	0	0	0	0	419	159
14. H St/G St and 3rd St	0	80	214	41	466	174	26	256	202	22	202	2
15. G St and 2nd St	148	191	85	139	1546	181	150	250	38	83	432	77
16. G St and Rialto Ave	15	64	49	33	531	26	196	144	57	55	260	75
17. G St and Congress St	0	126	20	7	0	4	0	255	6	20	0	0
18. Parking Lot Entrance and Congress St	20	0	0	0	0	20	0	0	0	0	0	0
19. E St and 2nd St	83	210	75	269	940	153	18	469	67	74	429	14
20. E St and Rialto Ave	19	271	74	38	604	41	129	370	39	27	265	57
21. E St and Parking Lot Entrance	0	0	0	0	0	0	0	0	0	0	0	0
22. Arrowhead Ave and Rialto Ave	9	219	25	64	277	19	61	349	49	39	243	41
23. H St and 5th St	111	167	12	185	1174	407	22	138	114	10	315	15
24. F St and Rialto Ave	0	0	0	44	434	0	27	0	34	0	281	41
25. E St and 5th St	47	236	64	55	915	108	77	371	34	55	289	28
26. E St and 4th St	16	341	100	10	88	23	31	446	34	8	27	19
27. E St-Inland Center Dr and Mill St	0	0	0	0	0	0	0	0	0	0	0	0

2035 PM TURNING MOVEMENT VOLUMES												
FORECAST YEAR BUILD - ADJUSTED (WITHOUT THE PARKING LOT/BUS/OFFICE TRIPS)												
	NORTHBOUND			EASTBOUND			SOUTHBOUND			WESTBOUND		
Intersection	L	T	R	L	T	R	L	T	R	L	T	R
1. K St and 3rd St	8	2	0	15	0	99	0	3	27	0	0	0
2. K St and 2nd St	38	4	196	8	759	15	93	7	4	140	473	7
3. K St and Rialto Ave	53	141	196	61	322	58	6	127	52	145	655	16
4. J St and 3rd St	25	0	0	0	0	53	0	0	0	0	0	0
5. J St and 2nd St	21	1	265	2	1088	39	96	8	5	223	731	49
6. J St and Rialto Ave	29	117	63	84	469	9	142	62	22	113	694	60
7. I St and 3rd St												
8. I St and 2nd St	28	1	6	44	1142	45	8	23	8	95	949	13
9. I St and Rialto Ave	0	0	0	0	597	0	0	0	208	0	632	65
10. I-215 SB Off Ramp and 3rd St	0	0	0	0	18	0	340	426	3	240	7	0
11. I-215 SB On Ramp and 2nd St	0	0	0	0	897	189	105	0	562	886	499	0
12. I-215 NB On Ramp and 3rd St	9	720	203	15	346	0	0	0	0	0	246	586
13. I-215 NB Off Ramp and 2nd St	21	6	400	482	531	0	0	0	0	0	1363	444
14. H St/G St and 3rd St	178	296	91	91	187	157	7	162	98	100	401	6
15. G St and 2nd St	390	242	52	198	738	55	72	170	163	82	1473	104
16. G St and Rialto Ave	63	277	61	24	441	12	132	118	54	48	649	274
17. G St and Congress St	0	257	25	4	0	4	0	241	0	25	0	0
18. Parking Lot Entrance and Congress St	25	0	0	0	0	25	0	0	0	0	0	0
19. E St and 2nd St	141	439	130	157	627	65	41	336	205	124	1168	33
20. E St and Rialto Ave	89	685	69	32	437	89	48	442	62	117	785	53
21. E St and Parking Lot Entrance	0	0	0	0	0	0	0	0	0	0	0	0
22. Arrowhead Ave and Rialto Ave	51	542	132	22	396	24	50	291	39	50	480	52
23. H St and 5th St	429	518	15	271	701	340	15	134	244	19	1266	49
24. F St and Rialto Ave	0	0	0	43	420	0	36	0	88	0	665	49
25. E St and 5th St	132	452	72	57	561	68	68	332	75	72	929	60
26. E St and 4th St	57	586	82	19	80	65	10	457	51	34	169	57
27. E St-Inland Center Dr and Mill St	0	0	0	0	0	0	0	0	0	0	0	0

ADDITIONAL TRIPS DUE TO THE PROPOSED PARKING LOT (265 SPACES)												
AM PEAK HOUR												
	NORTHBOUND			EASTBOUND			SOUTHBOUND			WESTBOUND		
Intersection	L	T	R	L	T	R	L	T	R	L	T	R
1. K St and 3rd St	0	0	0	0	0	0	0	0	0	0	0	0
2. K St and 2nd St	0	0	0	0	0	0	0	0	0	0	0	0
3. K St and Rialto Ave	0	0	0	0	19	0	0	0	0	0	4	0
4. J St and 3rd St	0	0	0	0	0	0	0	0	0	0	0	0
5. J St and 2nd St	0	0	0	0	0	0	0	0	0	0	0	0
6. J St and Rialto Ave	0	0	0	0	19	0	0	0	0	0	4	0
7. I St and 3rd St	0	0	0	0	0	0	0	0	0	0	0	0
8. I St and 2nd St	0	0	0	0	0	0	0	0	0	0	0	0
9. I St and Rialto Ave	0	0	0	0	19	0	0	0	0	0	4	0
10. I-215 SB Off Ramp and 3rd St	0	0	0	0	0	0	0	0	0	0	0	0
11. I-215 SB On Ramp and 2nd St	0	0	0	0	0	0	0	0	0	0	0	0
12. I-215 NB On Ramp and 3rd St	0	0	0	0	0	0	0	0	0	0	0	0
13. I-215 NB Off Ramp and 2nd St	0	0	0	0	0	0	0	0	0	0	0	0
14. H St/G St and 3rd St	0	0	0	0	0	0	0	2	0	0	0	0
15. G St and 2nd St	0	0	0	0	0	0	0	2	0	0	0	0
16. G St and Rialto Ave	4	0	0	0	0	19	0	2	0	0	0	0
17. G St and Congress St	0	0	37	0	0	0	20	0	0	9	0	5
18. Parking Lot Entrance and Congress St	0	0	0	57	0	0	0	0	13	0	0	0
19. E St and 2nd St	0	3	0	0	0	0	0	14	0	0	0	0
20. E St and Rialto Ave	0	3	9	0	0	0	0	14	0	40	0	0
21. E St and Parking Lot Entrance	43	0	0	13	0	10	0	0	54	0	0	0
22. Arrowhead Ave and Rialto Ave	0	0	0	3	7	0	0	0	11	0	29	0
23. H St and 5th St	0	0	0	0	0	0	0	2	0	0	0	0
24. F St and Rialto Ave	0	0	0	0	0	0	0	0	0	0	0	0
25. E St and 5th St	0	3	0	0	0	0	0	14	0	0	0	0
26. E St and 4th St	0	3	0	0	0	0	0	14	0	0	0	0
27. E St-Inland Center Dr and Mill St	0	0	0	0	0	0	10	0	0	0	0	43

ADDITIONAL TRIPS DUE TO THE PROPOSED PARKING LOT (265 SPACES)												
PM PEAK HOUR												
	NORTHBOUND			EASTBOUND			SOUTHBOUND			WESTBOUND		
Intersection	L	T	R	L	T	R	L	T	R	L	T	R
1. K St and 3rd St	0	0	0	0	0	0	0	0	0	0	0	0
2. K St and 2nd St	0	0	0	0	0	0	0	0	0	0	0	0
3. K St and Rialto Ave	0	0	0	0	5	0	0	0	0	0	15	0
4. J St and 3rd St	0	0	0	0	0	0	0	0	0	0	0	0
5. J St and 2nd St	0	0	0	0	0	0	0	0	0	0	0	0
6. J St and Rialto Ave	0	0	0	0	5	0	0	0	0	0	15	0
7. I St and 3rd St	0	0	0	0	0	0	0	0	0	0	0	0
8. I St and 2nd St	0	0	0	0	0	0	0	0	0	0	0	0
9. I St and Rialto Ave	0	0	0	0	5	0	0	0	0	0	15	0
10. I-215 SB Off Ramp and 3rd St	0	0	0	0	0	0	0	0	0	0	0	0
11. I-215 SB On Ramp and 2nd St	0	0	0	0	0	0	0	0	0	0	0	0
12. I-215 NB On Ramp and 3rd St	0	0	0	0	0	0	0	0	0	0	0	0
13. I-215 NB Off Ramp and 2nd St	0	0	0	0	0	0	0	0	0	0	0	0
14. H St/G St and 3rd St	0	1	0	0	0	0	0	0	0	0	0	0
15. G St and 2nd St	0	1	0	0	0	0	0	0	0	0	0	0
16. G St and Rialto Ave	15	1	0	0	0	5	0	0	0	0	0	0
17. G St and Congress St	0	0	9	0	0	0	5	0	0	30	0	17
18. Parking Lot Entrance and Congress St	0	0	0	14	0	0	0	0	47	0	0	0
19. E St and 2nd St	0	11	0	0	0	0	0	3	0	0	0	0
20. E St and Rialto Ave	0	11	33	0	0	0	0	3	0	10	0	0
21. E St and Parking Lot Entrance	11	0	0	44	0	36	0	0	13	0	0	0
22. Arrowhead Ave and Rialto Ave	0	0	0	9	24	0	0	0	3	0	7	0
23. H St and 5th St	0	1	0	0	0	0	0	0	0	0	0	0
24. F St and Rialto Ave	0	0	0	0	0	0	0	0	0	0	0	0
25. E St and 5th St	0	11	0	0	0	0	0	3	0	0	0	0
26. E St and 4th St	0	11	0	0	0	0	0	3	0	0	0	0
27. E St-Inland Center Dr and Mill St	0	0	0	0	0	0	36	0	0	0	0	11

ADDITIONAL BUS TRIPS (PCE)												
AM PEAK HOUR												
	NORTHBOUND			EASTBOUND			SOUTHBOUND			WESTBOUND		
Intersection	L	T	R	L	T	R	L	T	R	L	T	R
1. K St and 3rd St	0	4	0	0	0	8	0	8	0	0	0	0
2. K St and 2nd St	0	0	0	0	0	0	8	0	8	0	0	4
3. K St and Rialto Ave	0	0	0	0	0	0	0	0	0	0	0	0
4. J St and 3rd St	8	0	0	0	0	4	0	0	0	0	0	0
5. J St and 2nd St	0	0	0	0	8	0	4	0	0	0	4	8
6. J St and Rialto Ave	0	0	0	0	0	0	0	0	0	0	0	0
7. I St and 3rd St	0	0	0	0	0	0	0	0	0	0	0	0
8. I St and 2nd St	0	0	0	0	12	0	0	0	0	0	12	0
9. I St and Rialto Ave	0	0	0	0	0	0	0	0	0	0	0	0
10. I-215 SB Off Ramp and 3rd St	0	0	0	0	0	0	0	0	0	0	0	0
11. I-215 SB On Ramp and 2nd St	0	0	0	0	12	0	0	0	0	6	12	0
12. I-215 NB On Ramp and 3rd St	0	0	0	0	0	0	0	0	0	0	0	0
13. I-215 NB Off Ramp and 2nd St	0	0	6	0	12	0	0	0	0	0	18	0
14. H St/G St and 3rd St	0	20	12	0	0	0	0	24	0	4	0	0
15. G St and 2nd St	18	28	0	4	0	14	0	28	0	0	0	0
16. G St and Rialto Ave	0	0	0	0	0	0	42	0	0	0	0	46
17. G St and Congress St	0	0	0	0	0	0	0	0	0	0	0	0
18. Parking Lot Entrance and Congress St	0	0	0	0	0	0	0	0	0	0	0	0
19. E St and 2nd St	0	42	4	0	0	0	0	42	0	4	0	0
20. E St and Rialto Ave	24	0	0	46	0	24	0	46	0	0	0	0
21. E St and Parking Lot Entrance	0	24	0	0	0	0	0	24	0	0	0	0
22. Arrowhead Ave and Rialto Ave	0	0	0	0	0	0	0	0	0	0	0	0
23. H St and 5th St	6	14	0	0	8	6	0	14	0	4	8	0
24. F St and Rialto Ave	46	0	70	0	0	42	0	0	0	24	0	0
25. E St and 5th St	8	12	22	0	4	8	0	12	0	22	4	0
26. E St and 4th St	0	42	0	0	4	0	0	42	0	0	0	0
27. E St-Inland Center Dr and Mill St	0	20	0	4	0	0	0	20	4	0	0	0

ADDITIONAL BUS TRIPS (PCE)												
PM PEAK HOUR												
	NORTHBOUND			EASTBOUND			SOUTHBOUND			WESTBOUND		
Intersection	L	T	R	L	T	R	L	T	R	L	T	R
1. K St and 3rd St	0	4	0	0	0	8	0	8	0	0	0	0
2. K St and 2nd St	0	0	0	0	0	0	8	0	8	0	0	4
3. K St and Rialto Ave	0	0	0	0	0	0	0	0	0	0	0	0
4. J St and 3rd St	8	0	0	0	0	4	0	0	0	0	0	0
5. J St and 2nd St	0	0	0	0	8	0	4	0	0	0	4	8
6. J St and Rialto Ave	0	0	0	0	0	0	0	0	0	0	0	0
7. I St and 3rd St	0	0	0	0	0	0	0	0	0	0	0	0
8. I St and 2nd St	0	0	0	0	12	0	0	0	0	0	12	0
9. I St and Rialto Ave	0	0	0	0	0	0	0	0	0	0	0	0
10. I-215 SB Off Ramp and 3rd St	0	0	0	0	0	0	0	0	0	0	0	0
11. I-215 SB On Ramp and 2nd St	0	0	0	0	12	0	0	0	0	6	12	0
12. I-215 NB On Ramp and 3rd St	0	0	0	0	0	0	0	0	0	0	0	0
13. I-215 NB Off Ramp and 2nd St	0	0	4	0	12	0	0	0	0	0	18	0
14. H St/G St and 3rd St	0	22	12	0	0	0	0	26	0	4	0	0
15. G St and 2nd St	18	30	0	4	0	12	0	30	0	0	0	0
16. G St and Rialto Ave	0	0	0	0	0	0	34	0	0	0	0	48
17. G St and Congress St	0	0	0	0	0	0	8	0	0	0	0	0
18. Parking Lot Entrance and Congress St	0	0	0	0	0	0	0	0	0	0	0	0
19. E St and 2nd St	0	44	4	0	0	0	0	44	0	4	0	0
20. E St and Rialto Ave	24	0	0	48	0	24	0	48	0	0	0	0
21. E St and Parking Lot Entrance	0	24	0	0	0	0	0	24	0	0	0	0
22. Arrowhead Ave and Rialto Ave	0	0	0	0	0	0	0	0	0	0	0	0
23. H St and 5th St	8	14	0	0	8	8	0	14	0	4	8	0
24. F St and Rialto Ave	48	0	72	0	0	42	0	0	0	24	0	0
25. E St and 5th St	8	12	24	0	4	8	0	12	0	24	4	0
26. E St and 4th St	0	44	0	0	4	0	0	44	0	0	0	0
27. E St-Inland Center Dr and Mill St	0	20	0	4	0	0	0	20	4	0	0	0

ADDITIONAL TRIPS DUE TO THE PROPOSED OFFICE SPACE												
AM PEAK HOUR												
	NORTHBOUND			EASTBOUND			SOUTHBOUND			WESTBOUND		
Intersection	L	T	R	L	T	R	L	T	R	L	T	R
1. K St and 3rd St	0	0	0	0	0	0	0	0	0	0	0	0
2. K St and 2nd St	0	0	0	0	0	0	0	0	0	0	0	0
3. K St and Rialto Ave	0	0	0	0	1	0	0	0	0	0	0	0
4. J St and 3rd St	0	0	0	0	0	0	0	0	0	0	0	0
5. J St and 2nd St	0	0	0	0	0	0	0	0	0	0	0	0
6. J St and Rialto Ave	0	0	0	0	1	0	0	0	0	0	0	0
7. I St and 3rd St	0	0	0	0	0	0	0	0	0	0	0	0
8. I St and 2nd St	0	0	0	0	0	0	0	0	0	0	0	0
9. I St and Rialto Ave	0	0	0	0	1	0	0	0	0	0	0	0
10. I-215 SB Off Ramp and 3rd St	0	0	0	0	0	0	3	3	0	0	0	0
11. I-215 SB On Ramp and 2nd St	0	0	0	0	0	0	3	0	0	1	0	0
12. I-215 NB On Ramp and 3rd St	0	0	0	0	3	0	0	0	0	0	0	0
13. I-215 NB Off Ramp and 2nd St	0	0	5	0	3	0	0	0	0	0	1	0
14. H St/G St and 3rd St	0	0	0	0	0	3	0	1	0	0	0	0
15. G St and 2nd St	1	0	0	0	0	8	0	3	0	0	0	0
16. G St and Rialto Ave	0	0	0	0	1	0	11	0	0	0	0	1
17. G St and Congress St	0	0	0	0	0	0	0	0	0	0	0	0
18. Parking Lot Entrance and Congress St	0	0	0	0	0	0	0	0	0	0	0	0
19. E St and 2nd St	0	0	0	0	0	0	0	2	0	0	0	0
20. E St and Rialto Ave	1	0	0	0	0	0	0	0	2	0	3	0
21. E St and Parking Lot Entrance	0	1	0	0	0	0	0	0	0	0	0	0
22. Arrowhead Ave and Rialto Ave	1	0	0	0	0	0	0	0	1	0	1	0
23. H St and 5th St	0	0	0	0	0	0	0	1	0	0	0	0
24. F St and Rialto Ave	1	0	1	0	0	12	0	0	0	5	0	0
25. E St and 5th St	0	0	0	0	0	0	0	2	0	0	0	0
26. E St and 4th St	0	0	0	0	0	0	0	2	0	0	0	0
27. E St-Inland Center Dr and Mill St	0	1	0	0	0	0	0	0	0	0	0	0

ADDITIONAL TRIPS DUE TO THE PROPOSED OFFICE SPACE												
PM PEAK HOUR												
	NORTHBOUND			EASTBOUND			SOUTHBOUND			WESTBOUND		
Intersection	L	T	R	L	T	R	L	T	R	L	T	R
1. K St and 3rd St	0	0	0	0	0	0	0	0	0	0	0	0
2. K St and 2nd St	0	0	0	0	0	0	0	0	0	0	0	0
3. K St and Rialto Ave	0	0	0	0	0	0	0	0	0	0	1	0
4. J St and 3rd St	0	0	0	0	0	0	0	0	0	0	0	0
5. J St and 2nd St	0	0	0	0	0	0	0	0	0	0	0	0
6. J St and Rialto Ave	0	0	0	0	0	0	0	0	0	0	1	0
7. I St and 3rd St	0	0	0	0	0	0	0	0	0	0	0	0
8. I St and 2nd St	0	0	0	0	0	0	0	0	0	0	0	0
9. I St and Rialto Ave	0	0	0	0	0	0	0	0	0	0	1	0
10. I-215 SB Off Ramp and 3rd St	0	0	0	0	0	0	0	0	0	0	0	0
11. I-215 SB On Ramp and 2nd St	0	0	0	0	0	0	0	0	0	5	0	0
12. I-215 NB On Ramp and 3rd St	0	2	0	0	0	0	0	0	0	0	0	2
13. I-215 NB Off Ramp and 2nd St	0	0	1	0	0	0	0	0	0	0	5	2
14. H St/G St and 3rd St	2	1	0	0	0	0	0	0	0	0	0	0
15. G St and 2nd St	7	3	0	0	0	1	0	1	0	0	0	0
16. G St and Rialto Ave	0	0	0	0	0	0	2	0	0	0	1	10
17. G St and Congress St	0	0	0	0	0	0	0	0	0	0	0	0
18. Parking Lot Entrance and Congress St	0	0	0	0	0	0	0	0	0	0	0	0
19. E St and 2nd St	0	2	0	0	0	0	0	0	0	0	0	0
20. E St and Rialto Ave	0	0	0	2	2	1	0	0	0	0	0	0
21. E St and Parking Lot Entrance	0	0	0	0	0	0	0	1	0	0	0	0
22. Arrowhead Ave and Rialto Ave	0	0	0	1	1	1	0	0	0	0	0	0
23. H St and 5th St	0	1	0	0	0	0	0	0	0	0	0	0
24. F St and Rialto Ave	11	0	5	0	0	2	0	0	0	1	0	0
25. E St and 5th St	0	2	0	0	0	0	0	0	0	0	0	0
26. E St and 4th St	0	2	0	0	0	0	0	0	0	0	0	0
27. E St-Inland Center Dr and Mill St	0	0	0	0	0	0	0	1	0	0	0	0

2035 AM TURNING MOVEMENT VOLUMES												
FORECAST YEAR BUILD - FINAL VOLUMES (WITH 3RD STREET CLOSURE)												
	NORTHBOUND			EASTBOUND			SOUTHBOUND			WESTBOUND		
Intersection	L	T	R	L	T	R	L	T	R	L	T	R
1. K St and 3rd St	11	7	0	9	0	9	0	10	13	0	0	0
2. K St and 2nd St	23	3	152	5	604	20	19	7	11	125	312	16
3. K St and Rialto Ave	56	88	168	88	483	80	5	126	47	153	240	2
4. J St and 3rd St	23	0	0	0	0	31	0	0	0	0	0	0
5. J St and 2nd St	20	1	195	9	807	43	40	3	0	216	475	40
6. J St and Rialto Ave	30	43	38	95	593	17	139	67	12	87	389	60
7. I St and 3rd St												
8. I St and 2nd St	38	1	4	67	990	34	19	16	31	26	654	7
9. I St and Rialto Ave	0	0	0	0	733	0	0	0	161	0	332	16
10. I-215 SB Off Ramp and 3rd St	0	0	0	0	12	0	566	437	1	236	3	0
11. I-215 SB On Ramp and 2nd St	0	0	0	0	940	46	198	2	465	285	222	0
12. I-215 NB On Ramp and 3rd St	2	487	29	33	547	0	0	0	0	0	236	154
13. I-215 NB Off Ramp and 2nd St	81	33	1125	324	815	0	0	0	0	0	438	159
14. H St/G St and 3rd St	0	100	226	41	466	177	26	283	202	26	202	2
15. G St and 2nd St	167	219	85	143	1546	203	150	283	38	83	432	77
16. G St and Rialto Ave	19	64	49	33	532	45	249	146	57	55	260	122
17. G St and Congress St	0	126	57	7	0	4	20	255	6	29	0	5
18. Parking Lot Entrance and Congress St	20	0	0	57	0	20	0	0	13	0	0	0
19. E St and 2nd St	83	255	79	269	940	153	18	527	67	78	429	14
20. E St and Rialto Ave	44	274	83	84	604	65	129	430	41	67	268	57
21. E St and Parking Lot Entrance	43	25	0	13	0	10	0	24	54	0	0	0
22. Arrowhead Ave and Rialto Ave	10	219	25	67	284	19	61	349	61	39	273	41
23. H St and 5th St	117	181	12	185	1182	413	22	155	114	14	323	15
24. F St and Rialto Ave	47	0	71	44	434	54	27	0	34	29	281	41
25. E St and 5th St	55	251	86	55	919	116	77	399	34	77	293	28
26. E St and 4th St	16	386	100	10	92	23	31	504	34	8	27	19
27. E St-Inland Center Dr and Mill St	0	21	0	4	0	0	10	20	4	0	0	43

2035 PM TURNING MOVEMENT VOLUMES												
FORECAST YEAR BUILD - FINAL VOLUMES (WITH 3RD STREET CLOSURE)												
	NORTHBOUND			EASTBOUND			SOUTHBOUND			WESTBOUND		
Intersection	L	T	R	L	T	R	L	T	R	L	T	R
1. K St and 3rd St	8	6	0	15	0	107	0	11	27	0	0	0
2. K St and 2nd St	38	4	196	8	759	15	101	7	12	140	473	11
3. K St and Rialto Ave	53	141	196	61	327	58	6	127	52	145	671	16
4. J St and 3rd St	33	0	0	0	0	57	0	0	0	0	0	0
5. J St and 2nd St	21	1	265	2	1096	39	100	8	5	223	735	57
6. J St and Rialto Ave	29	117	63	84	474	9	142	62	22	113	710	60
7. I St and 3rd St												
8. I St and 2nd St	28	1	6	44	1154	45	8	23	8	95	961	13
9. I St and Rialto Ave	0	0	0	0	602	0	0	0	208	0	648	65
10. I-215 SB Off Ramp and 3rd St	0	0	0	0	18	0	340	426	3	240	7	0
11. I-215 SB On Ramp and 2nd St	0	0	0	0	909	189	105	0	562	897	511	0
12. I-215 NB On Ramp and 3rd St	9	722	203	15	346	0	0	0	0	0	246	588
13. I-215 NB Off Ramp and 2nd St	21	6	405	482	543	0	0	0	0	0	1386	446
14. H St/G St and 3rd St	180	320	103	91	187	157	7	188	98	104	401	6
15. G St and 2nd St	415	276	52	202	738	68	72	201	163	82	1473	104
16. G St and Rialto Ave	78	278	61	24	441	17	168	118	54	48	650	332
17. G St and Congress St	0	257	34	4	0	4	13	241	0	55	0	17
18. Parking Lot Entrance and Congress St	25	0	0	14	0	25	0	0	47	0	0	0
19. E St and 2nd St	141	496	134	157	627	65	41	383	205	128	1168	33
20. E St and Rialto Ave	113	696	102	82	439	114	48	493	62	127	785	53
21. E St and Parking Lot Entrance	11	24	0	44	0	36	0	25	13	0	0	0
22. Arrowhead Ave and Rialto Ave	51	542	132	32	421	25	50	291	42	50	487	52
23. H St and 5th St	437	534	15	271	709	348	15	148	244	23	1274	49
24. F St and Rialto Ave	59	0	77	43	420	44	36	0	88	25	665	49
25. E St and 5th St	140	477	96	57	565	76	68	347	75	96	933	60
26. E St and 4th St	57	643	82	19	84	65	10	504	51	34	169	57
27. E St-Inland Center Dr and Mill St	0	20	0	4	0	0	36	21	4	0	0	11

2035 WITH PROJECT TURN VOLUMES (WITHOUT THE PARKING LOT/BUS/OFFICE TRIPS)

27. E St-Inland Center Dr and Mill St	NORTHBOUND				EASTBOUND				SOUTHBOUND				WESTBOUND				NORTHEASTBOUND			
NODE NUMBER	HL	L	T	R	L	T	R	HR	L	T	BR	R	L	BL	T	R	HL	BL	BR	HR
AM Peak Hour	29	63	217	69	117	615	113	4	38	239	52	60	64	149	335	24	4	111	187	39
PM Peak Hour	53	216	711	147	150	466	114	8	31	411	130	92	112	355	633	40	15	145	179	45

FORECAST YEAR (2035) BUILD - 3RD STREET CLOSURE

27. E St-Inland Center Dr and Mill St	NORTHBOUND				EASTBOUND				SOUTHBOUND				WESTBOUND				NORTHEASTBOUND			
NODE NUMBER	HL	L	T	R	L	T	R	HR	L	T	BR	R	L	BL	T	R	HL	BL	BR	HR
AM Peak Hour	0	0	0	0	0	0	0	0	0	0	0	0	0	0	0	0	0	0	0	0
PM Peak Hour	0	0	0	0	0	0	0	0	0	0	0	0	0	0	0	0	0	0	0	0

2035 WITH PROJECT TURN VOLUMES - ADJUSTED (WITHOUT THE PARKING LOT/BUS/OFFICE TRIPS)

27. E St-Inland Center Dr and Mill St	NORTHBOUND				EASTBOUND				SOUTHBOUND				WESTBOUND				NORTHEASTBOUND			
NODE NUMBER	HL	L	T	R	L	T	R	HR	L	T	BR	R	L	BL	T	R	HL	BL	BR	HR
AM Peak Hour	29	63	217	69	117	615	113	4	38	239	52	60	64	149	335	24	4	111	187	39
PM Peak Hour	53	216	711	147	150	466	114	8	31	411	130	92	112	355	633	40	15	145	179	45

ADDITIONAL TRIPS DUE TO THE PROPOSED PARKING LOT

27. E St-Inland Center Dr and Mill St	NORTHBOUND				EASTBOUND				SOUTHBOUND				WESTBOUND				NORTHEASTBOUND			
NODE NUMBER	HL	L	T	R	L	T	R	HR	L	T	BR	R	L	BL	T	R	HL	BL	BR	HR
AM Peak Hour		0	0	0	0	0	0		10	0		0	0		0	43				
PM Peak Hour		0	0	0	0	0	0		36	0		0	0		0	11				

ADDITIONAL BUS TRIPS (PCE)

27. E St-Inland Center Dr and Mill St	NORTHBOUND				EASTBOUND				SOUTHBOUND				WESTBOUND				NORTHEASTBOUND			
NODE NUMBER	HL	L	T	R	L	T	R	HR	L	T	BR	R	L	BL	T	R	HL	BL	BR	HR
AM Peak Hour		0	20	0	4	0	0		0	20		4	0		0	0				
PM Peak Hour		0	20	0	4	0	0		0	20		4	0		0	0				

ADDITIONAL TRIPS DUE TO THE PROPOSED OFFICE SPACE

27. E St-Inland Center Dr and Mill St	NORTHBOUND				EASTBOUND				SOUTHBOUND				WESTBOUND				NORTHEASTBOUND			
NODE NUMBER	HL	L	T	R	L	T	R	HR	L	T	BR	R	L	BL	T	R	HL	BL	BR	HR
AM Peak Hour		0	1	0	0	0	0		0	0		0	0		0	0				
PM Peak Hour		0	0	0	0	0	0		0	1		0	0		0	0				

FORECAST YEAR (2035) BUILD - FINAL VOLUMES (WITH 3RD STREET CLOSURE)

27. E St-Inland Center Dr and Mill St	NORTHBOUND				EASTBOUND				SOUTHBOUND				WESTBOUND				NORTHEASTBOUND			
NODE NUMBER	HL	L	T	R	L	T	R	HR	L	T	BR	R	L	BL	T	R	HL	BL	BR	HR
AM Peak Hour	29	63	238	69	121	615	113	4	48	259	52	64	64	149	335	67	4	111	187	39
PM Peak Hour	53	216	731	147	154	466	114	8	67	432	130	96	112	355	633	51	15	145	179	45

2014 NO PROJECT VOLUMES

Intersection	2009/2010/2011 AM TURNING MOVEMENT COUNTS EXISTING											
	NORTHBOUND			EASTBOUND			SOUTHBOUND			WESTBOUND		
	L	T	R	L	T	R	L	T	R	L	T	R
1. K St and 3rd St	8	9	14	1	50	1	4	0	0	31	71	1
2. K St and 2nd St	16	3	41	8	258	13	8	25	12	39	128	21
3. K St and Rialto Ave	36	21	124	11	423	35	3	30	23	115	190	1
4. J St and 3rd St	4	0	5	0	69	0	0	0	0	4	112	0
5. J St and 2nd St	2	5	55	3	414	5	3	1	0	8	193	9
6. J St and Rialto Ave	0	6	2	49	498	2	4	4	4	31	247	9
7. I St and 3rd St	11	3	93	0	49	4	0	0	0	443	106	0
8. I St and 2nd St	4	37	114	45	287	4	119	292	8	39	170	13
9. I St and Rialto Ave	8	65	66	86	433	20	125	126	99	40	214	17
10. I-215 SB Off Ramp and 3rd St	0	0	0	0	142	3	169	102	374	10	172	0
11. I-215 SB On Ramp and 2nd St	0	0	0	0	389	166	75	10	22	207	234	0
12. I-215 NB On Ramp and 3rd St	1	244	12	72	239	0	0	0	0	0	181	112
13. I-215 NB Ramps and 2nd St	193	13	1142	136	328	0	0	0	0	0	291	108
14. H St/G St and 3rd St	0	78	70	31	127	71	11	153	100	40	76	8
15. G St and 2nd St	95	81	30	110	1132	111	89	137	22	27	237	32
16. G St and Rialto Ave	14	50	22	52	481	31	82	81	47	36	249	64
17. G St and Congress St	0	104	0	5	0	3	0	209	3	0	0	0
18. Parking Lot Entrance and Congress St	0	0	0	0	0	0	0	0	0	0	0	0
19. E St and 2nd St	38	142	62	207	883	41	42	315	86	33	374	18
20. E St and Rialto Ave	38	189	50	26	405	77	24	194	21	23	229	18
21. E St and Parking Lot Entrance	0	0	0	0	0	0	0	0	0	0	0	0
22. Arrowhead Ave and Rialto Ave	31	231	25	67	277	65	12	223	32	35	227	12
23. H St and 5th St	120	108	34	27	778	304	25	177	48	27	263	8
24. F St and Rialto Ave	0	0	0	37	363	0	22	0	27	0	234	33
25. E St and 5th St	38	148	50	34	675	72	50	238	23	45	298	18
26. E St and 4th St	24	245	99	5	67	32	12	344	21	14	33	11
27. E St-Inland Center Dr and Mill St	0	0	0	0	0	0	0	0	0	0	0	0

Intersection	2009/2010/2011 PM TURNING MOVEMENT COUNTS EXISTING											
	NORTHBOUND			EASTBOUND			SOUTHBOUND			WESTBOUND		
	L	T	R	L	T	R	L	T	R	L	T	R
1. K St and 3rd St	5	2	11	2	88	67	0	1	0	42	124	1
2. K St and 2nd St	36	5	17	7	274	24	24	23	22	26	283	7
3. K St and Rialto Ave	32	34	130	6	350	35	5	42	22	108	518	13
4. J St and 3rd St	1	0	10	0	90	1	0	0	0	20	162	0
5. J St and 2nd St	10	5	25	6	463	10	7	6	4	14	293	9
6. J St and Rialto Ave	5	10	11	28	427	4	6	10	9	39	546	11
7. I St and 3rd St	8	0	54	0	96	11	0	0	0	202	116	0
8. I St and 2nd St	11	36	204	22	316	8	36	177	12	39	272	9
9. I St and Rialto Ave	14	135	66	86	363	17	44	91	103	46	554	38
10. I-215 SB Off Ramp and 3rd St	0	0	0	0	150	9	65	53	265	5	53	0
11. I-215 SB On Ramp and 2nd St	0	0	0	0	399	157	44	9	22	678	327	0
12. I-215 NB On Ramp and 3rd St	4	425	77	16	200	0	0	0	0	0	49	347
13. I-215 NB Ramps and 2nd St	130	1	269	87	366	0	0	0	0	0	875	419
14. H St/G St and 3rd St	38	201	58	78	117	82	11	37	68	52	290	13
15. G St and 2nd St	324	139	50	77	459	28	33	88	54	85	986	81
16. G St and Rialto Ave	54	174	13	55	338	25	40	93	70	23	498	152
17. G St and Congress St	0	210	0	2	0	2	0	197	0	0	0	0
18. Parking Lot Entrance and Congress St	0	0	0	0	0	0	0	0	0	0	0	0
19. E St and 2nd St	102	335	96	138	536	50	36	266	173	88	886	26
20. E St and Rialto Ave	109	554	69	19	316	88	28	360	45	83	495	22
21. E St and Parking Lot Entrance	0	0	0	0	0	0	0	0	0	0	0	0
22. Arrowhead Ave and Rialto Ave	85	373	44	34	289	61	14	274	52	25	349	16
23. H St and 5th St	397	269	50	58	444	217	32	179	125	66	810	37
24. F St and Rialto Ave	0	0	0	40	355	0	24	0	77	0	548	36
25. E St and 5th St	94	354	44	28	453	43	29	305	45	49	778	60
26. E St and 4th St	59	475	24	8	76	48	11	367	36	49	173	13
27. E St-Inland Center Dr and Mill St	0	0	0	0	0	0	0	0	0	0	0	0

Intersection	2035 AM TURNING MOVEMENT VOLUMES NO BUILD											
	NORTHBOUND			EASTBOUND			SOUTHBOUND			WESTBOUND		
	L	T	R	L	T	R	L	T	R	L	T	R
1. K St and 3rd St	11	9	27	1	90	1	5	0	0	41	93	1
2. K St and 2nd St	23	5	60	12	416	20	11	33	16	50	170	28
3. K St and Rialto Ave	49	53	134	33	531	67	5	60	38	153	205	2
4. J St and 3rd St	6	0	6	0	122	0	0	0	0	12	144	0
5. J St and 2nd St	20	1	106	10	509	21	7	0	0	18	254	23
6. J St and Rialto Ave	25	9	5	40	674	0	15	2	3	48	368	60
7. I St and 3rd St	32	0	112	0	145	37	0	0	0	307	89	0
8. I St and 2nd St	12	71	113	44	538	34	104	206	31	44	223	27
9. I St and Rialto Ave	12	69	67	110	522	25	124	131	144	39	289	16
10. I-215 SB Off Ramp and 3rd St	0	0	0	0	235	10	563	217	258	22	107	0
11. I-215 SB On Ramp and 2nd St	0	0	0	0	719	36	195	12	59	278	210	0
12. I-215 NB On Ramp and 3rd St	2	203	29	242	608	0	0	0	0	0	136	154
13. I-215 NB Off Ramp and 2nd St	81	33	1114	115	820	0	0	0	0	0	419	159
14. H St/G St and 3rd St	0	80	214	41	466	174	26	256	202	22	62	2
15. G St and 2nd St	148	191	85	139	1546	181	150	250	38	83	432	77
16. G St and Rialto Ave	15	64	49	33	531	26	196	144	57	55	260	75
17. G St and Congress St	0	126	0	7	0	4	0	255	6	0	0	0
18. Parking Lot Entrance and Congress St	0	0	0	0	0	0	0	0	0	0	0	0
19. E St and 2nd St	83	210	75	269	940	153	18	469	67	74	429	14
20. E St and Rialto Ave	19	271	74	38	604	41	129	370	39	27	265	57
21. E St and Parking Lot Entrance	0	0	0	0	0	0	0	0	0	0	0	0
22. Arrowhead Ave and Rialto Ave	9	219	25	64	277	19	61	349	49	39	243	41
23. H St and 5th St	111	167	12	185	1174	407	22	138	114	10	315	15
24. F St and Rialto Ave	0	0	0	44	434	0	27	0	34	0	281	41
25. E St and 5th St	47	236	64	55	915	108	77	371	34	55	289	28
26. E St and 4th St	16	341	100	10	88	23	31	446	34	8	27	19
27. E St-Inland Center Dr and Mill St	0	0	0	0	0	0	0	0	0	0	0	0

Intersection	2035 PM TURNING MOVEMENT VOLUMES NO BUILD											
	NORTHBOUND			EASTBOUND			SOUTHBOUND			WESTBOUND		
	L	T	R	L	T	R	L	T	R	L	T	R
1. K St and 3rd St	8	2	27	2	199	99	0	1	0	61	183	1
2. K St and 2nd St	38	8	53	19	464	15	93	42	27	62	375	17
3. K St and Rialto Ave	49	55	173	8	393	53	6	69	32	145	593	16
4. J St and 3rd St	5	0	32	0	226	0	0	0	0	36	245	0
5. J St and 2nd St	21	1	76	10	540	1	31	1	5	43	405	29
6. J St and Rialto Ave	26	6	41	6	586	0	40	4	2	75	655	60
7. I St and 3rd St	85	0	257	0	196	83	0	0	0	261	198	0
8. I St and 2nd St	56	250	227	42	517	45	28	268	48	74	443	23
9. I St and Rialto Ave	7	217	45	181	450	9	102	116	169	38	594	135
10. I-215 SB Off Ramp and 3rd St	0	0	0	0	441	32	270	134	295	23	214	0
11. I-215 SB On Ramp and 2nd St	0	0	0	0	565	157	105	32	55	886	499	0
12. I-215 NB On Ramp and 3rd St	7	433	160	302	412	0	0	0	0	0	246	586
13. I-215 NB Off Ramp and 2nd St	21	6	400	150	531	0	0	0	0	0	1363	444
14. H St/G St and 3rd St	178	296	91	91	187	157	7	162	98	100	401	6
15. G St and 2nd St	390	242	52	198	738	55	72	170	163	82	1473	104
16. G St and Rialto Ave	63	277	61	24	441	12	132	118	54	48	649	274
17. G St and Congress St	0	257	0	4	0	4	0	241	0	0	0	0
18. Parking Lot Entrance and Congress St	0	0	0	0	0	0	0	0	0	0	0	0
19. E St and 2nd St	141	439	130	157	627	65	41	336	205	124	1168	33
20. E St and Rialto Ave	89	685	69	32	437	89	48	442	62	117	785	53
21. E St and Parking Lot Entrance	0	0	0	0	0	0	0	0	0	0	0	0
22. Arrowhead Ave and Rialto Ave	51	542	132	22	396	24	50	291	39	50	480	52
23. H St and 5th St	429	518	15	271	701	340	15	134	244	19	1266	49
24. F St and Rialto Ave	0	0	0	43	420	0	36	0	88	0	665	49
25. E St and 5th St	132	452	72	57	561	68	68	332	75	72	929	60
26. E St and 4th St	57	586	82	19	80	65	10	457	51	34	169	57
27. E St-Inland Center Dr and Mill St	0	0	0	0	0	0	0	0	0	0	0	0

Intersection	AM DIFFERENCE (2035-2009)											
	NORTHBOUND			EASTBOUND			SOUTHBOUND			WESTBOUND		
	L	T	R	L	T	R	L	T	R	L	T	R
1. K St and 3rd St	3	0	13	0	40	0	1	0	0	10	22	0
2. K St and 2nd St	7	2	19	4	158	7	3	8	4	11	42	7
3. K St and Rialto Ave	13	32	10	22	108	32	2	30	15	38	15	1
4. J St and 3rd St	2	0	1	0	53	0	0	0	0	8	32	0
5. J St and 2nd St	18	-4	51	7	95	16	4	-1	0	10	61	14
6. J St and Rialto Ave	25	3	3	-9	176	-2	11	-2	-1	17	121	51
7. I St and 3rd St	21	-3	19	0	96	33	0	0	0	-136	-17	0
8. I St and 2nd St	8	34	-1	-1	251	30	-15	-86	23	5	53	14
9. I St and Rialto Ave	4	4	1	24	89	5	-1	5	45	-1	75	-1
10. I-215 SB Off Ramp and 3rd St	0	0	0	0	93	7	394	115	-116	12	-65	0
11. I-215 SB On Ramp and 2nd St	0	0	0	0	330	-130	120	2	37	71	-24	0
12. I-215 NB On Ramp and 3rd St	1	-41	17	170	369	0	0	0	0	0	-45	42
13. I-215 NB Off Ramp and 2nd St	-112	20	-28	-21	492	0	0	0	0	0	128	51
14. H St/G St and 3rd St	0	2	144	10	339	103	15	103	102	-18	-14	-6
15. G St and 2nd St	53	110	55	29	414	70	61	113	16	56	195	45
16. G St and Rialto Ave	1	14	27	-19	50	-5	114	63	10	19	11	11
17. G St and Congress St	0	23	0	1	0	1	0	46	3	0	0	0
18. Parking Lot Entrance and Congress St	0	0	0	0	0	0	0	0	0	0	0	0
19. E St and 2nd St	46	68	13	62	56	112	-24	154	-19	40	56	-4
20. E St and Rialto Ave	-18	81	24	12	199	-36	105	176	18	4	35	39
21. E St and Parking Lot Entrance	0	0	0	0	0	0	0	0	0	0	0	0
22. Arrowhead Ave and Rialto Ave	-23	-13	0	-3	0	-46	49	126	16	4	16	30
23. H St and 5th St	-9	59	-23	158	396	102	-3	-39	67	-16	53	8
24. F St and Rialto Ave	0	0	0	7	71	0	5	0	6	0	46	7
25. E St and 5th St	9	88	14	21	240	36	27	133	11	10	-9	10
26. E St and 4th St	-8	97	1	5	21	-9	19	103	14	-6	-5	8
27. E St-Inland Center Dr and Mill St	0	0	0	0	0	0	0	0	0	0	0	0

Intersection	PM DIFFERENCE (2035-2009)											
	NORTHBOUND			EASTBOUND			SOUTHBOUND			WESTBOUND		
	L	T	R	L	T	R	L	T	R	L	T	R
1. K St and 3rd St	3	0	16	0	111	32	0	0	0	19	59	0
2. K St and 2nd St	2	3	36	12	190	-9	69	19	5	36	92	10
3. K St and Rialto Ave	17	21	43	2	43	18	1	27	10	37	75	3
4. J St and 3rd St	4	0	22	0	136	-1	0	0	0	16	83	0
5. J St and 2nd St	11	-4	51	4	77	-9	24	-5	1	29	112	20
6. J St and Rialto Ave	21	-4	30	-22	159	-4	34	-6	-7	36	109	49
7. I St and 3rd St	77	0	203	0	100	72	0	0	0	59	82	0
8. I St and 2nd St	45	214	23	20	201	37	-8	91	36	35	171	14
9. I St and Rialto Ave	-7	82	-21	95	87	-8	58	25	66	-8	40	97
10. I-215 SB Off Ramp and 3rd St	0	0	0	0	291	23	205	81	30	18	161	0
11. I-215 SB On Ramp and 2nd St	0	0	0	0	166	0	61	23	33	208	172	0
12. I-215 NB On Ramp and 3rd St	3	8	83	286	212	0	0	0	0	0	197	239
13. I-215 NB Off Ramp and 2nd St	-109	5	131	63	165	0	0	0	0	0	488	25
14. H St/G St and 3rd St	140	95	33	13	70	75	-4	125	30	48	111	-7
15. G St and 2nd St	66	103	2	121	279	27	39	82	109	-3	487	23
16. G St and Rialto Ave	9	103	48	-31	103	-13	92	25	-16	25	151	122
17. G St and Congress St	0	47	0	2	0	1	0	44	0	0	0	0
18. Parking Lot Entrance and Congress St	0	0	0	0	0	0	0	0	0	0	0	0
19. E St and 2nd St	40	104	34	19	91	14	5	70	32	36	282	6
20. E St and Rialto Ave	-20	132	0	13	120	1	19	82	17	35	290	31
21. E St and Parking Lot Entrance	0	0	0	0	0	0	0	0	0	0	0	0
22. Arrowhead Ave and Rialto Ave	-33	170	88	-11	107	-37	36	17	-14	25	131	36
23. H St and 5th St	32	249	-36	213	256	123	-17	-45	119	-47	456	13
24. F St and Rialto Ave	0	0	0	3	65	0	12	0	10	0	117	14
25. E St and 5th St	38	98	28	29	108	24	39	27	30	23	151	0
26. E St and 4th St	-2	111	58	11	4	17	0	91	15	-15	-4	44
27. E St-Inland Center Dr and Mill St	0	0	0	0	0	0	0	0	0	0	0	0

Intersection	AM ADJUSTED DIFFERENCE											0.125 0.192
	NORTHBOUND			EASTBOUND			SOUTHBOUND			WESTBOUND		
	L	T	R	L	T	R	L	T	R	L	T	R
1. K St and 3rd St	1	0	3	0	8	0	0	0	0	2	4	0
2. K St and 2nd St	1	0	4	1	30	1	1	1	1	2	8	1
3. K St and Rialto Ave	2	6	2	4	21	6	0	6	3	7	3	0
4. J St and 3rd St	0	0	0	0	10	0	0	0	0	1	6	0
5. J St and 2nd St	3	-1	10	1	18	3	1	0	0	2	12	3
6. J St and Rialto Ave	5	1	1	-2	34	0	2	0	0	3	23	10
7. I St and 3rd St	4	-1	4	0	18	6	0	0	0	-26	-3	0
8. I St and 2nd St	1	7	0	0	48	6	-3	-17	4	1	10	3
9. I St and Rialto Ave	1	1	0	5	17	1	0	1	9	0	14	0
10. I-215 SB Off Ramp and 3rd St	0	0	0	0	18	1	76	22	-22	2	-13	0
11. I-215 SB On Ramp and 2nd St	0	0	0	0	63	-25	23	0	7	14	-5	0
12. I-215 NB On Ramp and 3rd St	0	-8	3	33	71	0	0	0	0	0	-9	8
13. I-215 NB Off Ramp and 2nd St	-22	4	-5	-4	95	0	0	0	0	0	25	10
14. H St/G St and 3rd St	0	0	28	2	65	20	3	20	20	-3	-3	-1
15. G St and 2nd St	10	21	11	6	80	13	12	22	3	11	38	9
16. G St and Rialto Ave	0	3	5	-4	10	-1	22	12	2	4	2	2
17. G St and Congress St	0	3	0	0	0	0	0	6	0	0	0	0
18. Parking Lot Entrance and Congress St	0	0	0	0	0	0	0	0	0	0	0	0
19. E St and 2nd St	6	8	2	8	7	14	-3	19	-2	5	7	-1
20. E St and Rialto Ave	-2	10	3	1	25	-5	13	22	2	1	4	5
21. E St and Parking Lot Entrance	0	0	0	0	0	0	0	0	0	0	0	0
22. Arrowhead Ave and Rialto Ave	-3	-2	0	0	0	-6	6	16	2	1	2	4
23. H St and 5th St	-1	7	-3	20	49	13	0	-5	8	-2	7	1
24. F St and Rialto Ave	0	0	0	1	9	0	1	0	1	0	6	1
25. E St and 5th St	1	11	2	3	30	4	3	17	1	1	-1	1
26. E St and 4th St	-1	12	0	1	3	-1	2	13	2	-1	-1	1
27. E St-Inland Center Dr and Mill St	0	0	0	0	0	0	0	0	0	0	0	0

Intersection	PM ADJUSTED DIFFERENCE											0.125 0.192
	NORTHBOUND			EASTBOUND			SOUTHBOUND			WESTBOUND		
	L	T	R	L	T	R	L	T	R	L	T	R
1. K St and 3rd St	1	0	3	0	21	6	0	0	0	4	11	0
2. K St and 2nd St	0	1	7	2	37	-2	13	4	1	7	18	2
3. K St and Rialto Ave	3	4	8	0	8	3	0	5	2	7	14	1
4. J St and 3rd St	1	0	4	0	26	0	0	0	0	3	16	0
5. J St and 2nd St	2	-1	10	1	15	-2	5	-1	0	6	21	4
6. J St and Rialto Ave	4	-1	6	-4	31	-1	7	-1	-1	7	21	9
7. I St and 3rd St	15	0	39	0	19	14	0	0	0	11	16	0
8. I St and 2nd St	9	41	4	4	39	7	-2	18	7	7	33	3
9. I St and Rialto Ave	-1	16	-4	18	17	-2	11	5	13	-1	8	19
10. I-215 SB Off Ramp and 3rd St	0	0	0	0	56	4	39	16	6	3	31	0
11. I-215 SB On Ramp and 2nd St	0	0	0	0	32	0	12	4	6	40	33	0
12. I-215 NB On Ramp and 3rd St	1	2	16	55	41	0	0	0	0	0	38	46
13. I-215 NB Off Ramp and 2nd St	-21	1	25	12	32	0	0	0	0	0	94	5
14. H St/G St and 3rd St	27	18	6	2	14	14	-1	24	6	9	21	-1
15. G St and 2nd St	13	20	0	23	54	5	7	16	21	-1	94	4
16. G St and Rialto Ave	2	20	9	-6	20	-2	18	5	-3	5	29	23
17. G St and Congress St	0	6	0	0	0	0	0	6	0	0	0	0
18. Parking Lot Entrance and Congress St	0	0	0	0	0	0	0	0	0	0	0	0
19. E St and 2nd St	5	13	4	2	11	2	1	9	4	4	35	1
20. E St and Rialto Ave	-2	16	0	2	15	0	2	10	2	4	36	4
21. E St and Parking Lot Entrance	0	0	0	0	0	0	0	0	0	0	0	0
22. Arrowhead Ave and Rialto Ave	-4	21	11	-1	13	-5	5	2	-2	3	16	5
23. H St and 5th St	4	31	-4	27	32	15	-2	-6	15	-6	57	2
24. F St and Rialto Ave	0	0	0	0	8	0	2	0	1	0	15	2
25. E St and 5th St	5	12	4	4	13	3	5	3	4	3	19	0
26. E St and 4th St	0	14	7	1	1	2	0	11	2	-2	0	6
27. E St-Inland Center Dr and Mill St	0	0	0	0	0	0	0	0	0	0	0	0

Intersection	2014 AM TURNING MOVEMENT VOLS OPENING YEAR NB											
	NORTHBOUND			EASTBOUND			SOUTHBOUND			WESTBOUND		
	L	T	R	L	T	R	L	T	R	L	T	R
1. K St and 3rd St	9	9	17	1	58	1	0	0	0	33	75	1
2. K St and 2nd St	17	3	45	9	288	14	9	26	13	41	136	22
3. K St and Rialto Ave	38	27	126	15	444	41	3	36	26	122	193	1
4. J St and 3rd St	4	0	5	0	79	0	0	0	0	5	118	0
5. J St and 2nd St	5	4	65	4	432	8	4	1	0	10	205	12
6. J St and Rialto Ave	5	7	3	47	532	2	6	4	4	34	270	19
7. I St and 3rd St	15	2	97	0	67	10	0	0	0	417	103	0
8. I St and 2nd St	5	44	114	45	335	10	116	275	12	40	180	16
9. I St and Rialto Ave	9	66	66	91	450	21	125	127	108	40	228	17
10. I-215 SB Off Ramp and 3rd St	0	0	0	0	160	4	245	124	352	12	159	0
11. I-215 SB On Ramp and 2nd St	0	0	0	0	452	141	98	10	29	221	229	0
12. I-215 NB On Ramp and 3rd St	1	236	15	105	310	0	0	0	0	0	172	120
13. I-215 NB Off Ramp and 2nd St	171	17	1137	132	423	0	0	0	0	0	316	118
14. H St/G St and 3rd St	0	78	98	33	192	91	14	173	120	37	73	7
15. G St and 2nd St	105	102	41	116	1212	124	101	159	25	38	275	41
16. G St and Rialto Ave	14	53	27	48	491	30	104	93	49	40	251	66
17. G St and Congress St	0	106	0	5	0	3	0	215	3	0	0	0
18. Parking Lot Entrance and Congress St	0	0	0	0	0	0	0	0	0	0	0	0
19. E St and 2nd St	43	151	63	215	890	55	39	334	83	39	381	17
20. E St and Rialto Ave	35	200	53	28	430	73	37	216	23	24	234	23
21. E St and Parking Lot Entrance	0	0	0	0	0	0	0	0	0	0	0	0
22. Arrowhead Ave and Rialto Ave	29	230	25	67	277	59	18	239	34	35	229	15
23. H St and 5th St	119	115	31	46	828	317	24	172	56	25	269	9
24. F St and Rialto Ave	0	0	0	38	372	0	23	0	28	0	240	34
25. E St and 5th St	39	159	52	37	705	77	53	255	24	46	297	19
26. E St and 4th St	23	257	99	6	70	31	14	356	22	13	32	12
27. E St-Inland Center Dr and Mill St	0	0	0	0	0	0	0	0	0	0	0	0

Intersection	2014 PM TURNING MOVEMENT VOLS OPENING YEAR NB											
	NORTHBOUND			EASTBOUND			SOUTHBOUND			WESTBOUND		
	L	T	R	L	T	R	L	T	R	L	T	R
1. K St and 3rd St	6	2	14	2	109	73	0	0	0	46	135	1
2. K St and 2nd St	36	6	24	9	311	22	37	27	23	33	301	9
3. K St and Rialto Ave	35	38	138	6	358	38	5	47	24	115	532	14
4. J St and 3rd St	2	0	14	0	116	1	0	0	0	23	178	0
5. J St and 2nd St	12	4	35	7	478	8	12	5	4	20	314	13
6. J St and Rialto Ave	9	6	17	24	458	3	13	3	8	46	567	20
7. I St and 3rd St	23	0	93	0	115	25	0	0	0	213	132	0
8. I St and 2nd St	20	77	208	26	355	15	34	195	19	46	305	12
9. I St and Rialto Ave	13	151	62	104	380	15	55	96	116	45	562	57
10. I-215 SB Off Ramp and 3rd St	0	0	0	0	206	13	104	69	271	8	84	0
11. I-215 SB On Ramp and 2nd St	0	0	0	0	431	157	56	13	28	718	360	0
12. I-215 NB On Ramp and 3rd St	5	427	93	71	241	0	0	0	0	0	87	393
13. I-215 NB Off Ramp and 2nd St	109	2	294	99	398	0	0	0	0	0	969	424
14. H St/G St and 3rd St	65	219	64	80	131	96	10	61	74	61	311	12
15. G St and 2nd St	337	159	50	100	513	33	40	104	75	84	1080	85
16. G St and Rialto Ave	56	194	22	49	358	23	58	98	67	28	527	175
17. G St and Congress St	0	216	0	2	0	2	0	202	0	0	0	0
18. Parking Lot Entrance and Congress St	0	0	0	0	0	0	0	0	0	0	0	0
19. E St and 2nd St	107	348	101	141	547	52	36	275	177	92	921	27
20. E St and Rialto Ave	106	570	69	21	331	88	31	370	47	87	531	26
21. E St and Parking Lot Entrance	0	0	0	0	0	0	0	0	0	0	0	0
22. Arrowhead Ave and Rialto Ave	91	400	48	36	310	66	15	294	57	27	374	17
23. H St and 5th St	426	288	54	63	477	233	35	192	134	71	868	40
24. F St and Rialto Ave	0	0	0	43	381	0	26	0	84	0	587	39
25. E St and 5th St	101	380	48	31	486	47	31	327	49	53	834	65
26. E St and 4th St	63	509	26	9	82	52	12	393	39	53	185	14
27. E St-Inland Center Dr and Mill St	0	0	0	0	0	0	0	0	0	0	0	0

Intersection	2014 AM TURNING MOVEMENT VOLUMES OPENING YEAR NO BUILD											
	NORTHBOUND			EASTBOUND			SOUTHBOUND			WESTBOUND		
	L	T	R	L	T	R	L	T	R	L	T	R
1. K St and 3rd St	9	9	17	1	138	1	0	0	0	33	75	1
2. K St and 2nd St	17	3	45	9	288	14	9	26	13	41	186	22
3. K St and Rialto Ave	38	27	126	15	444	41	3	36	26	122	193	1
4. J St and 3rd St	4	0	5	0	159	10	0	0	0	5	118	0
5. J St and 2nd St	5	4	65	4	432	13	9	6	0	10	305	12
6. J St and Rialto Ave	5	7	3	47	532	2	6	2	4	34	270	19
7. I St and 3rd St	0	0	0	0	147	0	0	0	0	0	103	0
8. I St and 2nd St	5	24	114	25	455	10	16	5	12	320	360	6
9. I St and Rialto Ave	9	66	66	91	450	21	125	127	108	40	228	17
10. I-215 SB Off Ramp and 3rd St	0	0	0	0	160	4	245	404	2	152	89	0
11. I-215 SB On Ramp and 2nd St	0	0	0	0	452	141	98	10	451	221	229	0
12. I-215 NB On Ramp and 3rd St	1	236	15	105	310	0	0	0	0	0	247	120
13. I-215 NB Ramps and 2nd St	171	17	1137	132	423	0	0	0	0	0	276	118
14. H St/G St and 3rd St	0	78	98	33	192	91	14	173	120	37	208	7
15. G St and 2nd St	105	102	41	116	1212	124	101	159	25	38	275	41
16. G St and Rialto Ave	14	53	27	48	491	30	104	93	49	40	251	66
17. G St and Congress St	0	106	0	5	0	3	0	215	3	0	0	0
18. Parking Lot Entrance and Congress St	0	0	0	0	0	0	0	0	0	0	0	0
19. E St and 2nd St	43	151	63	215	890	55	39	334	83	39	381	17
20. E St and Rialto Ave	35	200	53	28	430	73	37	216	23	24	234	23
21. E St and Parking Lot Entrance	0	0	0	0	0	0	0	0	0	0	0	0
22. Arrowhead Ave and Rialto Ave	29	230	25	67	277	59	18	239	34	35	229	15
23. H St and 5th St	119	115	31	46	828	317	24	172	56	25	269	9
24. F St and Rialto Ave	0	0	0	38	372	0	23	0	28	0	240	34
25. E St and 5th St	39	159	52	37	705	77	53	255	24	46	297	19
26. E St and 4th St	23	257	99	6	70	31	14	356	22	13	32	12
27. E St-Inland Center Dr and Mill St												

Intersection	2014 PM TURNING MOVEMENT VOLUMES OPENING YEAR NO BUILD											
	NORTHBOUND			EASTBOUND			SOUTHBOUND			WESTBOUND		
	L	T	R	L	T	R	L	T	R	L	T	R
1. K St and 3rd St	6	2	14	2	209	73	0	0	0	46	135	1
2. K St and 2nd St	36	6	24	9	311	22	37	27	23	33	301	9
3. K St and Rialto Ave	35	38	138	6	358	38	5	47	24	115	532	14
4. J St and 3rd St	2	0	14	0	216	21	0	0	0	23	178	0
5. J St and 2nd St	12	4	35	7	478	8	22	15	4	20	314	13
6. J St and Rialto Ave	9	6	17	24	458	3	13	3	8	46	567	20
7. I St and 3rd St	0	0	0	0	215	0	0	0	0	0	132	0
8. I St and 2nd St	20	27	208	11	360	15	14	20	19	221	360	8
9. I St and Rialto Ave	13	151	62	104	380	15	55	96	116	45	562	57
10. I-215 SB Off Ramp and 3rd St	0	0	0	0	206	13	104	279	61	8	84	0
11. I-215 SB On Ramp and 2nd St	0	0	0	0	431	157	56	13	233	718	360	0
12. I-215 NB On Ramp and 3rd St	5	427	93	71	241	0	0	0	0	0	87	393
13. I-215 NB Ramps and 2nd St	109	2	294	99	398	0	0	0	0	0	969	424
14. H St/G St and 3rd St	65	219	64	80	131	96	10	61	74	61	311	12
15. G St and 2nd St	337	159	50	100	513	33	40	104	75	84	1080	85
16. G St and Rialto Ave	56	194	22	49	358	23	58	98	67	28	527	175
17. G St and Congress St	0	216	0	2	0	2	0	202	0	0	0	0
18. Parking Lot Entrance and Congress St	0	0	0	0	0	0	0	0	0	0	0	0
19. E St and 2nd St	107	348	101	141	547	52	36	275	177	92	921	27
20. E St and Rialto Ave	106	570	69	21	331	88	31	370	47	87	531	26
21. E St and Parking Lot Entrance	0	0	0	0	0	0	0	0	0	0	0	0
22. Arrowhead Ave and Rialto Ave	91	400	48	36	310	66	15	294	57	27	374	17
23. H St and 5th St	426	288	54	63	477	233	35	192	134	71	868	40
24. F St and Rialto Ave	0	0	0	43	381	0	26	0	84	0	587	39
25. E St and 5th St	101	380	48	31	486	47	31	327	49	53	834	65
26. E St and 4th St	63	509	26	9	82	52	12	393	39	53	185	14
27. E St-Inland Center Dr and Mill St												

2014 WITH PROJECT VOLUMES

2014 AM TURNING MOVEMENT VOLUMES												
OPENING YEAR NO BUILD												
	NORTHBOUND			EASTBOUND			SOUTHBOUND			WESTBOUND		
Intersection	L	T	R	L	T	R	L	T	R	L	T	R
1. K St and 3rd St	9	9	17	1	138	1	0	0	0	33	75	1
2. K St and 2nd St	17	3	45	9	288	14	9	26	13	41	186	22
3. K St and Rialto Ave	38	27	126	15	444	41	3	36	26	122	193	1
4. J St and 3rd St	4	0	5	0	159	10	0	0	0	5	118	0
5. J St and 2nd St	5	4	65	4	432	13	9	6	0	10	305	12
6. J St and Rialto Ave	5	7	3	47	532	2	6	2	4	34	270	19
7. I St and 3rd St	INTERSECTION DOESN'T EXIST											
8. I St and 2nd St	5	24	114	25	455	10	16	5	12	320	360	6
9. I St and Rialto Ave	9	66	66	91	450	21	125	127	108	40	228	17
10. I-215 SB Off Ramp and 3rd St	0	0	0	0	160	4	245	404	2	152	89	0
11. I-215 SB On Ramp and 2nd St	0	0	0	0	452	141	98	10	451	221	229	0
12. I-215 NB On Ramp and 3rd St	1	236	15	105	310	0	0	0	0	0	247	120
13. I-215 NB Off Ramp and 2nd St	171	17	1137	132	423	0	0	0	0	0	276	118
14. H St/G St and 3rd St	0	78	98	33	192	91	14	173	120	37	208	7
15. G St and 2nd St	105	102	41	116	1212	124	101	159	25	38	275	41
16. G St and Rialto Ave	14	53	27	48	491	30	104	93	49	40	251	66
17. G St and Congress St	0	106	0	5	0	3	0	215	3	0	0	0
18. Parking Lot Entrance and Congress St	INTERSECTION DOESN'T EXIST											
19. E St and 2nd St	43	151	63	215	890	55	39	334	83	39	381	17
20. E St and Rialto Ave	35	200	53	28	430	73	37	216	23	24	234	23
21. E St and Parking Lot Entrance	INTERSECTION DOESN'T EXIST											
22. Arrowhead Ave and Rialto Ave	29	230	25	67	277	59	18	239	34	35	229	15
23. H St and 5th St	119	115	31	46	828	317	24	172	56	25	269	9
24. F St and Rialto Ave	0	0	0	38	372	0	23	0	28	0	240	34
25. E St and 5th St	39	159	52	37	705	77	53	255	24	46	297	19
26. E St and 4th St	23	257	99	6	70	31	14	356	22	13	32	12
27. E St-Inland Center Dr and Mill St												

2014 PM TURNING MOVEMENT VOLUMES												
OPENING YEAR NO BUILD												
	NORTHBOUND			EASTBOUND			SOUTHBOUND			WESTBOUND		
Intersection	L	T	R	L	T	R	L	T	R	L	T	R
1. K St and 3rd St	6	2	14	2	209	73	0	0	0	46	135	1
2. K St and 2nd St	36	6	24	9	311	22	37	27	23	33	301	9
3. K St and Rialto Ave	35	38	138	6	358	38	5	47	24	115	532	14
4. J St and 3rd St	2	0	14	0	216	21	0	0	0	23	178	0
5. J St and 2nd St	12	4	35	7	478	8	22	15	4	20	314	13
6. J St and Rialto Ave	9	6	17	24	458	3	13	3	8	46	567	20
7. I St and 3rd St	INTERSECTION DOESN'T EXIST											
8. I St and 2nd St	20	27	208	11	360	15	14	20	19	221	360	8
9. I St and Rialto Ave	13	151	62	104	380	15	55	96	116	45	562	57
10. I-215 SB Off Ramp and 3rd St	0	0	0	0	206	13	104	279	61	8	84	0
11. I-215 SB On Ramp and 2nd St	0	0	0	0	431	157	56	13	233	718	360	0
12. I-215 NB On Ramp and 3rd St	5	427	93	71	241	0	0	0	0	0	87	393
13. I-215 NB Off Ramp and 2nd St	109	2	294	99	398	0	0	0	0	0	969	424
14. H St/G St and 3rd St	65	219	64	80	131	96	10	61	74	61	311	12
15. G St and 2nd St	337	159	50	100	513	33	40	104	75	84	1080	85
16. G St and Rialto Ave	56	194	22	49	358	23	58	98	67	28	527	175
17. G St and Congress St	0	216	0	2	0	2	0	202	0	0	0	0
18. Parking Lot Entrance and Congress St	INTERSECTION DOESN'T EXIST											
19. E St and 2nd St	107	348	101	141	547	52	36	275	177	92	921	27
20. E St and Rialto Ave	106	570	69	21	331	88	31	370	47	87	531	26
21. E St and Parking Lot Entrance	INTERSECTION DOESN'T EXIST											
22. Arrowhead Ave and Rialto Ave	91	400	48	36	310	66	15	294	57	27	374	17
23. H St and 5th St	426	288	54	63	477	233	35	192	134	71	868	40
24. F St and Rialto Ave	0	0	0	43	381	0	26	0	84	0	587	39
25. E St and 5th St	101	380	48	31	486	47	31	327	49	53	834	65
26. E St and 4th St	63	509	26	9	82	52	12	393	39	53	185	14
27. E St-Inland Center Dr and Mill St												

2014 AM TURNING MOVEMENT VOLUMES												
K St and 3rd St Reconfiguration												
	NORTHBOUND			EASTBOUND			SOUTHBOUND			WESTBOUND		
Intersection	L	T	R	L	T	R	L	T	R	L	T	R
1. K St and 3rd St	0	8	-17	137	-138	0	0	33	75	-33	-75	-1
2. K St and 2nd St												
3. K St and Rialto Ave												
4. J St and 3rd St												
5. J St and 2nd St												
6. J St and Rialto Ave												
7. I St and 3rd St												
8. I St and 2nd St												
9. I St and Rialto Ave												
10. I-215 SB Off Ramp and 3rd St												
11. I-215 SB On Ramp and 2nd St												
12. I-215 NB On Ramp and 3rd St												
13. I-215 NB Off Ramp and 2nd St												
14. H St/G St and 3rd St												
15. G St and 2nd St												
16. G St and Rialto Ave												
17. G St and Congress St												
18. Parking Lot Entrance and Congress St												
19. E St and 2nd St												
20. E St and Rialto Ave												
21. E St and Parking Lot Entrance												
22. Arrowhead Ave and Rialto Ave												
23. H St and 5th St												
24. F St and Rialto Ave												
25. E St and 5th St												
26. E St and 4th St												
27. E St-Inland Center Dr and Mill St												

2014 PM TURNING MOVEMENT VOLUMES												
K St and 3rd St Reconfiguration												
	NORTHBOUND			EASTBOUND			SOUTHBOUND			WESTBOUND		
Intersection	L	T	R	L	T	R	L	T	R	L	T	R
1. K St and 3rd St	0	12	-14	207	-209	0	0	46	135	-46	-135	-1
2. K St and 2nd St												
3. K St and Rialto Ave												
4. J St and 3rd St												
5. J St and 2nd St												
6. J St and Rialto Ave												
7. I St and 3rd St												
8. I St and 2nd St												
9. I St and Rialto Ave												
10. I-215 SB Off Ramp and 3rd St												
11. I-215 SB On Ramp and 2nd St												
12. I-215 NB On Ramp and 3rd St												
13. I-215 NB Off Ramp and 2nd St												
14. H St/G St and 3rd St												
15. G St and 2nd St												
16. G St and Rialto Ave												
17. G St and Congress St												
18. Parking Lot Entrance and Congress St												
19. E St and 2nd St												
20. E St and Rialto Ave												
21. E St and Parking Lot Entrance												
22. Arrowhead Ave and Rialto Ave												
23. H St and 5th St												
24. F St and Rialto Ave												
25. E St and 5th St												
26. E St and 4th St												
27. E St-Inland Center Dr and Mill St												

2014 AM TURNING MOVEMENT VOLUMES												
OPENING YEAR BUILD - I STREET CLOSURE												
	NORTHBOUND			EASTBOUND			SOUTHBOUND			WESTBOUND		
Intersection	L	T	R	L	T	R	L	T	R	L	T	R
1. K St and 3rd St												
2. K St and 2nd St			59							64		
3. K St and Rialto Ave	6	33	33	26	-42	16		64			3	
4. J St and 3rd St												
5. J St and 2nd St			98		59					188	64	
6. J St and Rialto Ave	3	33	33	65	-79	5	125	63		40		
7. I St and 3rd St												
8. I St and 2nd St	-2	-22	-105	27	128					-252	252	
9. I St and Rialto Ave	-9	-66	-66	-91	191	-21	-125	-127		-40	40	
10. I-215 SB Off Ramp and 3rd St												
11. I-215 SB On Ramp and 2nd St												
12. I-215 NB On Ramp and 3rd St												
13. I-215 NB Off Ramp and 2nd St												
14. H St/G St and 3rd St												
15. G St and 2nd St												
16. G St and Rialto Ave												
17. G St and Congress St												
18. Parking Lot Entrance and Congress St												
19. E St and 2nd St												
20. E St and Rialto Ave												
21. E St and Parking Lot Entrance												
22. Arrowhead Ave and Rialto Ave												
23. H St and 5th St												
24. F St and Rialto Ave												
25. E St and 5th St												
26. E St and 4th St												
27. E St-Inland Center Dr and Mill St												

2014 PM TURNING MOVEMENT VOLUMES												
OPENING YEAR BUILD - I STREET CLOSURE												
	NORTHBOUND			EASTBOUND			SOUTHBOUND			WESTBOUND		
Intersection	L	T	R	L	T	R	L	T	R	L	T	R
1. K St and 3rd St												
2. K St and 2nd St			145							48		
3. K St and Rialto Ave	3	76	31	69	-77	8		48			10	
4. J St and 3rd St												
5. J St and 2nd St			110		145					103	48	
6. J St and Rialto Ave	10	75	31	35	-88	7	55	48		45		
7. I St and 3rd St												
8. I St and 2nd St	-10	-23	-176	28	215					-151	151	
9. I St and Rialto Ave	-13	-151	-62	-104	117	-15	-55	-96		-45	45	
10. I-215 SB Off Ramp and 3rd St												
11. I-215 SB On Ramp and 2nd St												
12. I-215 NB On Ramp and 3rd St												
13. I-215 NB Off Ramp and 2nd St												
14. H St/G St and 3rd St												
15. G St and 2nd St												
16. G St and Rialto Ave												
17. G St and Congress St												
18. Parking Lot Entrance and Congress St												
19. E St and 2nd St												
20. E St and Rialto Ave												
21. E St and Parking Lot Entrance												
22. Arrowhead Ave and Rialto Ave												
23. H St and 5th St												
24. F St and Rialto Ave												
25. E St and 5th St												
26. E St and 4th St												
27. E St-Inland Center Dr and Mill St												

2014 AM TURNING MOVEMENT VOLUMES												
OPENING YEAR BUILD (WITHOUT THE PARKING LOT/BUS/OFFICE TRIPS)												
	NORTHBOUND			EASTBOUND			SOUTHBOUND			WESTBOUND		
Intersection	L	T	R	L	T	R	L	T	R	L	T	R
1. K St and 3rd St	9	17	0	138	0	1	0	33	75	0	0	0
2. K St and 2nd St	17	3	104	9	288	14	9	26	13	105	186	22
3. K St and Rialto Ave	44	60	159	41	402	57	3	100	26	122	196	1
4. J St and 3rd St	4	0	5	0	159	10	0	0	0	5	118	0
5. J St and 2nd St	5	4	163	4	491	13	9	6	0	198	369	12
6. J St and Rialto Ave	8	40	36	112	453	7	131	65	4	74	270	19
7. I St and 3rd St												
8. I St and 2nd St	3	2	9	52	583	10	16	5	12	68	612	6
9. I St and Rialto Ave	0	0	0	0	641	0	0	0	108	0	268	17
10. I-215 SB Off Ramp and 3rd St	0	0	0	0	160	4	245	404	2	152	89	0
11. I-215 SB On Ramp and 2nd St	0	0	0	0	452	141	98	10	451	221	229	0
12. I-215 NB On Ramp and 3rd St	1	236	15	105	310	0	0	0	0	0	247	120
13. I-215 NB Off Ramp and 2nd St	171	17	1137	132	423	0	0	0	0	0	276	118
14. H St/G St and 3rd St	0	78	98	33	192	91	14	173	120	37	208	7
15. G St and 2nd St	105	102	41	116	1212	124	101	159	25	38	275	41
16. G St and Rialto Ave	14	53	27	48	491	30	104	93	49	40	251	66
17. G St and Congress St	0	106	20	5	0	3	0	215	3	20	0	0
18. Parking Lot Entrance and Congress St	20	0	0	0	0	20	0	0	0	0	0	0
19. E St and 2nd St	43	151	63	215	890	55	39	334	83	39	381	17
20. E St and Rialto Ave	35	200	53	28	430	73	37	216	23	24	234	23
21. E St and Parking Lot Entrance	0	0	0	0	0	0	0	0	0	0	0	0
22. Arrowhead Ave and Rialto Ave	29	230	25	67	277	59	18	239	34	35	229	15
23. H St and 5th St	119	115	31	46	828	317	24	172	56	25	269	9
24. F St and Rialto Ave	0	0	0	38	372	0	23	0	28	0	240	34
25. E St and 5th St	39	159	52	37	705	77	53	255	24	46	297	19
26. E St and 4th St	23	257	99	6	70	31	14	356	22	13	32	12
27. E St-Inland Center Dr and Mill St												

2014 PM TURNING MOVEMENT VOLUMES												
OPENING YEAR BUILD (WITHOUT THE PARKING LOT/BUS/OFFICE TRIPS)												
	NORTHBOUND			EASTBOUND			SOUTHBOUND			WESTBOUND		
Intersection	L	T	R	L	T	R	L	T	R	L	T	R
1. K St and 3rd St	6	14	0	209	0	73	0	46	135	0	0	0
2. K St and 2nd St	36	6	169	9	311	22	37	27	23	81	301	9
3. K St and Rialto Ave	38	114	169	75	281	46	5	95	24	115	542	14
4. J St and 3rd St	2	0	14	0	216	21	0	0	0	23	178	0
5. J St and 2nd St	12	4	145	7	623	8	22	15	4	123	362	13
6. J St and Rialto Ave	19	81	48	59	370	10	68	51	8	91	567	20
7. I St and 3rd St												
8. I St and 2nd St	10	4	32	39	575	15	14	20	19	70	511	8
9. I St and Rialto Ave	0	0	0	0	497	0	0	0	116	0	607	57
10. I-215 SB Off Ramp and 3rd St	0	0	0	0	206	13	104	279	61	8	84	0
11. I-215 SB On Ramp and 2nd St	0	0	0	0	431	157	56	13	233	718	360	0
12. I-215 NB On Ramp and 3rd St	5	427	93	71	241	0	0	0	0	0	87	393
13. I-215 NB Off Ramp and 2nd St	109	2	294	99	398	0	0	0	0	0	969	424
14. H St/G St and 3rd St	65	219	64	80	131	96	10	61	74	61	311	12
15. G St and 2nd St	337	159	50	100	513	33	40	104	75	84	1080	85
16. G St and Rialto Ave	56	194	22	49	358	23	58	98	67	28	527	175
17. G St and Congress St	0	216	25	2	0	2	0	202	0	25	0	0
18. Parking Lot Entrance and Congress St	25	0	0	0	0	25	0	0	0	0	0	0
19. E St and 2nd St	107	348	101	141	547	52	36	275	177	92	921	27
20. E St and Rialto Ave	106	570	69	21	331	88	31	370	47	87	531	26
21. E St and Parking Lot Entrance	0	0	0	0	0	0	0	0	0	0	0	0
22. Arrowhead Ave and Rialto Ave	91	400	48	36	310	66	15	294	57	27	374	17
23. H St and 5th St	426	288	54	63	477	233	35	192	134	71	868	40
24. F St and Rialto Ave	0	0	0	43	381	0	26	0	84	0	587	39
25. E St and 5th St	101	380	48	31	486	47	31	327	49	53	834	65
26. E St and 4th St	63	509	26	9	82	52	12	393	39	53	185	14
27. E St-Inland Center Dr and Mill St												

2014 AM TURNING MOVEMENT VOLUMES												
OPENING YEAR BUILD - 3RD STREET CLOSURE												
	NORTHBOUND			EASTBOUND			SOUTHBOUND			WESTBOUND		
Intersection	L	T	R	L	T	R	L	T	R	L	T	R
1. K St and 3rd St		-16		-131				-31	-62			
2. K St and 2nd St		-2	2	-4	135			-21	-10	9	43	-10
3. K St and Rialto Ave									9		26	
4. J St and 3rd St	9		-5		-159	5				-5	-118	
5. J St and 2nd St				-1	144	4	13	-4		9	52	9
6. J St and Rialto Ave									9		17	
7. I St and 3rd St												
8. I St and 2nd St					157					17	70	
9. I St and Rialto Ave									17			
10. I-215 SB Off Ramp and 3rd St					-152	-4		2	-2	85	-85	
11. I-215 SB On Ramp and 2nd St					153	4		-4	87			
12. I-215 NB On Ramp and 3rd St	3	100	50	-100	-52							
13. I-215 NB Off Ramp and 2nd St				153								
14. H St/G St and 3rd St												
15. G St and 2nd St												
16. G St and Rialto Ave												
17. G St and Congress St												
18. Parking Lot Entrance and Congress St												
19. E St and 2nd St												
20. E St and Rialto Ave												
21. E St and Parking Lot Entrance												
22. Arrowhead Ave and Rialto Ave												
23. H St and 5th St												
24. F St and Rialto Ave												
25. E St and 5th St												
26. E St and 4th St												
27. E St-Inland Center Dr and Mill St												

2014 PM TURNING MOVEMENT VOLUMES												
OPENING YEAR BUILD - 3RD STREET CLOSURE												
	NORTHBOUND			EASTBOUND			SOUTHBOUND			WESTBOUND		
Intersection	L	T	R	L	T	R	L	T	R	L	T	R
1. K St and 3rd St		-13		-199				-44	-114			
2. K St and 2nd St		-3	3	-5	204			-24	-20	14	68	-5
3. K St and Rialto Ave									14		42	
4. J St and 3rd St	14		-14		-216	-5				-23	-178	
5. J St and 2nd St				-3	207	8	14	-8		14	82	14
6. J St and Rialto Ave									14		28	
7. I St and 3rd St												
8. I St and 2nd St					221					28	110	
9. I St and Rialto Ave									28			
10. I-215 SB Off Ramp and 3rd St					-196	-13		58	-58	80	-80	
11. I-215 SB On Ramp and 2nd St					208	13		-13	138			
12. I-215 NB On Ramp and 3rd St	7	68	133	-68	-128							
13. I-215 NB Off Ramp and 2nd St				208								
14. H St/G St and 3rd St												
15. G St and 2nd St												
16. G St and Rialto Ave												
17. G St and Congress St												
18. Parking Lot Entrance and Congress St												
19. E St and 2nd St												
20. E St and Rialto Ave												
21. E St and Parking Lot Entrance												
22. Arrowhead Ave and Rialto Ave												
23. H St and 5th St												
24. F St and Rialto Ave												
25. E St and 5th St												
26. E St and 4th St												
27. E St-Inland Center Dr and Mill St												

2014 AM TURNING MOVEMENT VOLUMES												
OPENING YEAR BUILD - ADJUSTED (WITHOUT THE PARKING LOT/BUS/OFFICE TRIPS)												
	NORTHBOUND			EASTBOUND			SOUTHBOUND			WESTBOUND		
Intersection	L	T	R	L	T	R	L	T	R	L	T	R
1. K St and 3rd St	9	1	0	7	0	1	0	2	13	0	0	0
2. K St and 2nd St	17	1	106	5	423	14	9	5	3	114	229	12
3. K St and Rialto Ave	44	60	159	41	402	57	3	100	35	122	222	1
4. J St and 3rd St	13	0	0	0	0	15	0	0	0	0	0	0
5. J St and 2nd St	5	4	163	3	635	17	22	2	0	207	421	21
6. J St and Rialto Ave	8	40	36	112	453	7	131	65	13	74	287	19
7. I St and 3rd St	0	0	0	0	0	0	0	0	0	0	0	0
8. I St and 2nd St	3	2	9	52	740	10	16	5	12	85	682	6
9. I St and Rialto Ave	0	0	0	0	641	0	0	0	125	0	268	17
10. I-215 SB Off Ramp and 3rd St	0	0	0	0	8	0	245	406	0	237	4	0
11. I-215 SB On Ramp and 2nd St	0	0	0	0	605	145	98	6	538	221	229	0
12. I-215 NB On Ramp and 3rd St	4	336	65	5	258	0	0	0	0	0	247	120
13. I-215 NB Off Ramp and 2nd St	171	17	1137	285	423	0	0	0	0	0	276	118
14. H St/G St and 3rd St	0	78	98	33	192	91	14	173	120	37	208	7
15. G St and 2nd St	105	102	41	116	1212	124	101	159	25	38	275	41
16. G St and Rialto Ave	14	53	27	48	491	30	104	93	49	40	251	66
17. G St and Congress St	0	106	20	5	0	3	0	215	3	20	0	0
18. Parking Lot Entrance and Congress St	20	0	0	0	0	20	0	0	0	0	0	0
19. E St and 2nd St	43	151	63	215	890	55	39	334	83	39	381	17
20. E St and Rialto Ave	35	200	53	28	430	73	37	216	23	24	234	23
21. E St and Parking Lot Entrance	0	0	0	0	0	0	0	0	0	0	0	0
22. Arrowhead Ave and Rialto Ave	29	230	25	67	277	59	18	239	34	35	229	15
23. H St and 5th St	119	115	31	46	828	317	24	172	56	25	269	9
24. F St and Rialto Ave	0	0	0	38	372	0	23	0	28	0	240	34
25. E St and 5th St	39	159	52	37	705	77	53	255	24	46	297	19
26. E St and 4th St	23	257	99	6	70	31	14	356	22	13	32	12
27. E St-Inland Center Dr and Mill St	0	0	0	0	0	0	0	0	0	0	0	0

2014 PM TURNING MOVEMENT VOLUMES												
OPENING YEAR BUILD - ADJUSTED (WITHOUT THE PARKING LOT/BUS/OFFICE TRIPS)												
	NORTHBOUND			EASTBOUND			SOUTHBOUND			WESTBOUND		
Intersection	L	T	R	L	T	R	L	T	R	L	T	R
1. K St and 3rd St	6	1	0	10	0	73	0	2	21	0	0	0
2. K St and 2nd St	36	3	172	4	515	22	37	3	3	95	369	4
3. K St and Rialto Ave	38	114	169	75	281	46	5	95	38	115	584	14
4. J St and 3rd St	16	0	0	0	0	16	0	0	0	0	0	0
5. J St and 2nd St	12	4	145	4	830	16	36	7	4	137	444	27
6. J St and Rialto Ave	19	81	48	59	370	10	68	51	22	91	595	20
7. I St and 3rd St	0	0	0	0	0	0	0	0	0	0	0	0
8. I St and 2nd St	10	4	32	39	796	15	14	20	19	98	621	8
9. I St and Rialto Ave	0	0	0	0	497	0	0	0	144	0	607	57
10. I-215 SB Off Ramp and 3rd St	0	0	0	0	10	0	104	337	3	88	4	0
11. I-215 SB On Ramp and 2nd St	0	0	0	0	639	170	56	0	371	718	360	0
12. I-215 NB On Ramp and 3rd St	12	495	226	3	113	0	0	0	0	0	87	393
13. I-215 NB Off Ramp and 2nd St	109	2	294	307	398	0	0	0	0	0	969	424
14. H St/G St and 3rd St	65	219	64	80	131	96	10	61	74	61	311	12
15. G St and 2nd St	337	159	50	100	513	33	40	104	75	84	1080	85
16. G St and Rialto Ave	56	194	22	49	358	23	58	98	67	28	527	175
17. G St and Congress St	0	216	25	2	0	2	0	202	0	25	0	0
18. Parking Lot Entrance and Congress St	25	0	0	0	0	25	0	0	0	0	0	0
19. E St and 2nd St	107	348	101	141	547	52	36	275	177	92	921	27
20. E St and Rialto Ave	106	570	69	21	331	88	31	370	47	87	531	26
21. E St and Parking Lot Entrance	0	0	0	0	0	0	0	0	0	0	0	0
22. Arrowhead Ave and Rialto Ave	91	400	48	36	310	66	15	294	57	27	374	17
23. H St and 5th St	426	288	54	63	477	233	35	192	134	71	868	40
24. F St and Rialto Ave	0	0	0	43	381	0	26	0	84	0	587	39
25. E St and 5th St	101	380	48	31	486	47	31	327	49	53	834	65
26. E St and 4th St	63	509	26	9	82	52	12	393	39	53	185	14
27. E St-Inland Center Dr and Mill St	0	0	0	0	0	0	0	0	0	0	0	0

ADDITIONAL TRIPS DUE TO THE PROPOSED PARKING LOT (265 SPACES)												
AM PEAK HOUR												
	NORTHBOUND			EASTBOUND			SOUTHBOUND			WESTBOUND		
Intersection	L	T	R	L	T	R	L	T	R	L	T	R
1. K St and 3rd St	0	0	0	0	0	0	0	0	0	0	0	0
2. K St and 2nd St	0	0	0	0	0	0	0	0	0	0	0	0
3. K St and Rialto Ave	0	0	0	0	19	0	0	0	0	0	4	0
4. J St and 3rd St	0	0	0	0	0	0	0	0	0	0	0	0
5. J St and 2nd St	0	0	0	0	0	0	0	0	0	0	0	0
6. J St and Rialto Ave	0	0	0	0	19	0	0	0	0	0	4	0
7. I St and 3rd St	0	0	0	0	0	0	0	0	0	0	0	0
8. I St and 2nd St	0	0	0	0	0	0	0	0	0	0	0	0
9. I St and Rialto Ave	0	0	0	0	19	0	0	0	0	0	4	0
10. I-215 SB Off Ramp and 3rd St	0	0	0	0	0	0	0	0	0	0	0	0
11. I-215 SB On Ramp and 2nd St	0	0	0	0	0	0	0	0	0	0	0	0
12. I-215 NB On Ramp and 3rd St	0	0	0	0	0	0	0	0	0	0	0	0
13. I-215 NB Off Ramp and 2nd St	0	0	0	0	0	0	0	0	0	0	0	0
14. H St/G St and 3rd St	0	0	0	0	0	0	0	2	0	0	0	0
15. G St and 2nd St	0	0	0	0	0	0	0	2	0	0	0	0
16. G St and Rialto Ave	4	0	0	0	0	19	0	2	0	0	0	0
17. G St and Congress St	0	0	37	0	0	0	20	0	0	9	0	5
18. Parking Lot Entrance and Congress St	0	0	0	57	0	0	0	0	13	0	0	0
19. E St and 2nd St	0	3	0	0	0	0	0	14	0	0	0	0
20. E St and Rialto Ave	0	3	9	0	0	0	0	14	0	40	0	0
21. E St and Parking Lot Entrance	43	0	0	13	0	10	0	0	54	0	0	0
22. Arrowhead Ave and Rialto Ave	0	0	0	3	7	0	0	0	11	0	29	0
23. H St and 5th St	0	0	0	0	0	0	0	2	0	0	0	0
24. F St and Rialto Ave	0	0	0	0	0	0	0	0	0	0	0	0
25. E St and 5th St	0	3	0	0	0	0	0	14	0	0	0	0
26. E St and 4th St	0	3	0	0	0	0	0	14	0	0	0	0
27. E St-Inland Center Dr and Mill St	0	0	0	0	0	0	10	0	0	0	0	43

ADDITIONAL TRIPS DUE TO THE PROPOSED PARKING LOT (265 SPACES)												
PM PEAK HOUR												
	NORTHBOUND			EASTBOUND			SOUTHBOUND			WESTBOUND		
Intersection	L	T	R	L	T	R	L	T	R	L	T	R
1. K St and 3rd St	0	0	0	0	0	0	0	0	0	0	0	0
2. K St and 2nd St	0	0	0	0	0	0	0	0	0	0	0	0
3. K St and Rialto Ave	0	0	0	0	5	0	0	0	0	0	15	0
4. J St and 3rd St	0	0	0	0	0	0	0	0	0	0	0	0
5. J St and 2nd St	0	0	0	0	0	0	0	0	0	0	0	0
6. J St and Rialto Ave	0	0	0	0	5	0	0	0	0	0	15	0
7. I St and 3rd St	0	0	0	0	0	0	0	0	0	0	0	0
8. I St and 2nd St	0	0	0	0	0	0	0	0	0	0	0	0
9. I St and Rialto Ave	0	0	0	0	5	0	0	0	0	0	15	0
10. I-215 SB Off Ramp and 3rd St	0	0	0	0	0	0	0	0	0	0	0	0
11. I-215 SB On Ramp and 2nd St	0	0	0	0	0	0	0	0	0	0	0	0
12. I-215 NB On Ramp and 3rd St	0	0	0	0	0	0	0	0	0	0	0	0
13. I-215 NB Off Ramp and 2nd St	0	0	0	0	0	0	0	0	0	0	0	0
14. H St/G St and 3rd St	0	1	0	0	0	0	0	0	0	0	0	0
15. G St and 2nd St	0	1	0	0	0	0	0	0	0	0	0	0
16. G St and Rialto Ave	15	1	0	0	0	5	0	0	0	0	0	0
17. G St and Congress St	0	0	9	0	0	0	5	0	0	30	0	17
18. Parking Lot Entrance and Congress St	0	0	0	14	0	0	0	0	47	0	0	0
19. E St and 2nd St	0	11	0	0	0	0	0	3	0	0	0	0
20. E St and Rialto Ave	0	11	33	0	0	0	0	3	0	10	0	0
21. E St and Parking Lot Entrance	11	0	0	44	0	36	0	0	13	0	0	0
22. Arrowhead Ave and Rialto Ave	0	0	0	9	24	0	0	0	3	0	7	0
23. H St and 5th St	0	1	0	0	0	0	0	0	0	0	0	0
24. F St and Rialto Ave	0	0	0	0	0	0	0	0	0	0	0	0
25. E St and 5th St	0	11	0	0	0	0	0	3	0	0	0	0
26. E St and 4th St	0	11	0	0	0	0	0	3	0	0	0	0
27. E St-Inland Center Dr and Mill St	0	0	0	0	0	0	36	0	0	0	0	11

ADDITIONAL BUS TRIPS (PCE)												
AM PEAK HOUR												
	NORTHBOUND			EASTBOUND			SOUTHBOUND			WESTBOUND		
Intersection	L	T	R	L	T	R	L	T	R	L	T	R
1. K St and 3rd St	0	4	0	0	0	8	0	8	0	0	0	0
2. K St and 2nd St	0	0	0	0	0	0	8	0	8	0	0	4
3. K St and Rialto Ave	0	0	0	0	0	0	0	0	0	0	0	0
4. J St and 3rd St	8	0	0	0	0	4	0	0	0	0	0	0
5. J St and 2nd St	0	0	0	0	8	0	4	0	0	0	4	8
6. J St and Rialto Ave	0	0	0	0	0	0	0	0	0	0	0	0
7. I St and 3rd St	0	0	0	0	0	0	0	0	0	0	0	0
8. I St and 2nd St	0	0	0	0	12	0	0	0	0	0	12	0
9. I St and Rialto Ave	0	0	0	0	0	0	0	0	0	0	0	0
10. I-215 SB Off Ramp and 3rd St	0	0	0	0	0	0	0	0	0	0	0	0
11. I-215 SB On Ramp and 2nd St	0	0	0	0	12	0	0	0	0	6	12	0
12. I-215 NB On Ramp and 3rd St	0	0	0	0	0	0	0	0	0	0	0	0
13. I-215 NB Off Ramp and 2nd St	0	0	6	0	12	0	0	0	0	0	18	0
14. H St/G St and 3rd St	0	20	12	0	0	0	0	24	0	4	0	0
15. G St and 2nd St	18	28	0	4	0	14	0	28	0	0	0	0
16. G St and Rialto Ave	0	0	0	0	0	0	42	0	0	0	0	46
17. G St and Congress St	0	0	0	0	0	0	0	0	0	0	0	0
18. Parking Lot Entrance and Congress St	0	0	0	0	0	0	0	0	0	0	0	0
19. E St and 2nd St	0	42	4	0	0	0	0	42	0	4	0	0
20. E St and Rialto Ave	24	0	0	46	0	24	0	46	0	0	0	0
21. E St and Parking Lot Entrance	0	24	0	0	0	0	0	24	0	0	0	0
22. Arrowhead Ave and Rialto Ave	0	0	0	0	0	0	0	0	0	0	0	0
23. H St and 5th St	6	14	0	0	8	6	0	14	0	4	8	0
24. F St and Rialto Ave	46	0	70	0	0	42	0	0	0	24	0	0
25. E St and 5th St	8	12	22	0	4	8	0	12	0	22	4	0
26. E St and 4th St	0	42	0	0	4	0	0	42	0	0	0	0
27. E St-Inland Center Dr and Mill St	0	20	0	4	0	0	0	20	4	0	0	0

ADDITIONAL BUS TRIPS (PCE)												
PM PEAK HOUR												
	NORTHBOUND			EASTBOUND			SOUTHBOUND			WESTBOUND		
Intersection	L	T	R	L	T	R	L	T	R	L	T	R
1. K St and 3rd St	0	4	0	0	0	8	0	8	0	0	0	0
2. K St and 2nd St	0	0	0	0	0	0	8	0	8	0	0	4
3. K St and Rialto Ave	0	0	0	0	0	0	0	0	0	0	0	0
4. J St and 3rd St	8	0	0	0	0	4	0	0	0	0	0	0
5. J St and 2nd St	0	0	0	0	8	0	4	0	0	0	4	8
6. J St and Rialto Ave	0	0	0	0	0	0	0	0	0	0	0	0
7. I St and 3rd St	0	0	0	0	0	0	0	0	0	0	0	0
8. I St and 2nd St	0	0	0	0	12	0	0	0	0	0	12	0
9. I St and Rialto Ave	0	0	0	0	0	0	0	0	0	0	0	0
10. I-215 SB Off Ramp and 3rd St	0	0	0	0	0	0	0	0	0	0	0	0
11. I-215 SB On Ramp and 2nd St	0	0	0	0	12	0	0	0	0	6	12	0
12. I-215 NB On Ramp and 3rd St	0	0	0	0	0	0	0	0	0	0	0	0
13. I-215 NB Off Ramp and 2nd St	0	0	4	0	12	0	0	0	0	0	18	0
14. H St/G St and 3rd St	0	22	12	0	0	0	0	26	0	4	0	0
15. G St and 2nd St	18	30	0	4	0	12	0	30	0	0	0	0
16. G St and Rialto Ave	0	0	0	0	0	0	34	0	0	0	0	48
17. G St and Congress St	0	0	0	0	0	0	8	0	0	0	0	0
18. Parking Lot Entrance and Congress St	0	0	0	0	0	0	0	0	0	0	0	0
19. E St and 2nd St	0	44	4	0	0	0	0	44	0	4	0	0
20. E St and Rialto Ave	24	0	0	48	0	24	0	48	0	0	0	0
21. E St and Parking Lot Entrance	0	24	0	0	0	0	0	24	0	0	0	0
22. Arrowhead Ave and Rialto Ave	0	0	0	0	0	0	0	0	0	0	0	0
23. H St and 5th St	8	14	0	0	8	8	0	14	0	4	8	0
24. F St and Rialto Ave	48	0	72	0	0	42	0	0	0	24	0	0
25. E St and 5th St	8	12	24	0	4	8	0	12	0	24	4	0
26. E St and 4th St	0	44	0	0	4	0	0	44	0	0	0	0
27. E St-Inland Center Dr and Mill St	0	20	0	4	0	0	0	20	4	0	0	0

ADDITIONAL TRIPS DUE TO THE PROPOSED OFFICE SPACE												
AM PEAK HOUR												
	NORTHBOUND			EASTBOUND			SOUTHBOUND			WESTBOUND		
Intersection	L	T	R	L	T	R	L	T	R	L	T	R
1. K St and 3rd St	0	0	0	0	0	0	0	0	0	0	0	0
2. K St and 2nd St	0	0	0	0	0	0	0	0	0	0	0	0
3. K St and Rialto Ave	0	0	0	0	1	0	0	0	0	0	0	0
4. J St and 3rd St	0	0	0	0	0	0	0	0	0	0	0	0
5. J St and 2nd St	0	0	0	0	0	0	0	0	0	0	0	0
6. J St and Rialto Ave	0	0	0	0	1	0	0	0	0	0	0	0
7. I St and 3rd St	0	0	0	0	0	0	0	0	0	0	0	0
8. I St and 2nd St	0	0	0	0	0	0	0	0	0	0	0	0
9. I St and Rialto Ave	0	0	0	0	1	0	0	0	0	0	0	0
10. I-215 SB Off Ramp and 3rd St	0	0	0	0	0	0	3	3	0	0	0	0
11. I-215 SB On Ramp and 2nd St	0	0	0	0	0	0	3	0	0	1	0	0
12. I-215 NB On Ramp and 3rd St	0	0	0	0	3	0	0	0	0	0	0	0
13. I-215 NB Off Ramp and 2nd St	0	0	5	0	3	0	0	0	0	0	1	0
14. H St/G St and 3rd St	0	0	0	0	0	3	0	1	0	0	0	0
15. G St and 2nd St	1	0	0	0	0	8	0	3	0	0	0	0
16. G St and Rialto Ave	0	0	0	0	1	0	11	0	0	0	0	1
17. G St and Congress St	0	0	0	0	0	0	0	0	0	0	0	0
18. Parking Lot Entrance and Congress St	0	0	0	0	0	0	0	0	0	0	0	0
19. E St and 2nd St	0	0	0	0	0	0	0	2	0	0	0	0
20. E St and Rialto Ave	1	0	0	0	0	0	0	0	2	0	3	0
21. E St and Parking Lot Entrance	0	1	0	0	0	0	0	0	0	0	0	0
22. Arrowhead Ave and Rialto Ave	1	0	0	0	0	0	0	0	1	0	1	0
23. H St and 5th St	0	0	0	0	0	0	0	1	0	0	0	0
24. F St and Rialto Ave	1	0	1	0	0	12	0	0	0	5	0	0
25. E St and 5th St	0	0	0	0	0	0	0	2	0	0	0	0
26. E St and 4th St	0	0	0	0	0	0	0	2	0	0	0	0
27. E St-Inland Center Dr and Mill St	0	1	0	0	0	0	0	0	0	0	0	0

ADDITIONAL TRIPS DUE TO THE PROPOSED OFFICE SPACE												
PM PEAK HOUR												
	NORTHBOUND			EASTBOUND			SOUTHBOUND			WESTBOUND		
Intersection	L	T	R	L	T	R	L	T	R	L	T	R
1. K St and 3rd St	0	0	0	0	0	0	0	0	0	0	0	0
2. K St and 2nd St	0	0	0	0	0	0	0	0	0	0	0	0
3. K St and Rialto Ave	0	0	0	0	0	0	0	0	0	0	1	0
4. J St and 3rd St	0	0	0	0	0	0	0	0	0	0	0	0
5. J St and 2nd St	0	0	0	0	0	0	0	0	0	0	0	0
6. J St and Rialto Ave	0	0	0	0	0	0	0	0	0	0	1	0
7. I St and 3rd St	0	0	0	0	0	0	0	0	0	0	0	0
8. I St and 2nd St	0	0	0	0	0	0	0	0	0	0	0	0
9. I St and Rialto Ave	0	0	0	0	0	0	0	0	0	0	1	0
10. I-215 SB Off Ramp and 3rd St	0	0	0	0	0	0	0	0	0	0	0	0
11. I-215 SB On Ramp and 2nd St	0	0	0	0	0	0	0	0	0	5	0	0
12. I-215 NB On Ramp and 3rd St	0	2	0	0	0	0	0	0	0	0	0	2
13. I-215 NB Off Ramp and 2nd St	0	0	1	0	0	0	0	0	0	0	5	2
14. H St/G St and 3rd St	2	1	0	0	0	0	0	0	0	0	0	0
15. G St and 2nd St	7	3	0	0	0	1	0	1	0	0	0	0
16. G St and Rialto Ave	0	0	0	0	0	0	2	0	0	0	1	10
17. G St and Congress St	0	0	0	0	0	0	0	0	0	0	0	0
18. Parking Lot Entrance and Congress St	0	0	0	0	0	0	0	0	0	0	0	0
19. E St and 2nd St	0	2	0	0	0	0	0	0	0	0	0	0
20. E St and Rialto Ave	0	0	0	2	2	1	0	0	0	0	0	0
21. E St and Parking Lot Entrance	0	0	0	0	0	0	0	1	0	0	0	0
22. Arrowhead Ave and Rialto Ave	0	0	0	1	1	1	0	0	0	0	0	0
23. H St and 5th St	0	1	0	0	0	0	0	0	0	0	0	0
24. F St and Rialto Ave	11	0	5	0	0	2	0	0	0	1	0	0
25. E St and 5th St	0	2	0	0	0	0	0	0	0	0	0	0
26. E St and 4th St	0	2	0	0	0	0	0	0	0	0	0	0
27. E St-Inland Center Dr and Mill St	0	0	0	0	0	0	0	1	0	0	0	0

2014 AM TURNING MOVEMENT VOLUMES												
OPENING YEAR BUILD - FINAL VOLUMES (WITH 3RD STREET CLOSURE)												
	NORTHBOUND			EASTBOUND			SOUTHBOUND			WESTBOUND		
Intersection	L	T	R	L	T	R	L	T	R	L	T	R
1. K St and 3rd St	9	5	0	7	0	9	0	10	13	0	0	0
2. K St and 2nd St	17	1	106	5	423	14	17	5	11	114	229	16
3. K St and Rialto Ave	44	60	159	41	422	57	3	100	35	122	226	1
4. J St and 3rd St	21	0	0	0	0	19	0	0	0	0	0	0
5. J St and 2nd St	5	4	163	3	643	17	26	2	0	207	425	29
6. J St and Rialto Ave	8	40	36	112	473	7	131	65	13	74	291	19
7. I St and 3rd St	0	0	0	0	0	0	0	0	0	0	0	0
8. I St and 2nd St	3	2	9	52	752	10	16	5	12	85	694	6
9. I St and Rialto Ave	0	0	0	0	661	0	0	0	125	0	272	17
10. I-215 SB Off Ramp and 3rd St	0	0	0	0	8	0	248	409	0	237	4	0
11. I-215 SB On Ramp and 2nd St	0	0	0	0	617	145	101	6	538	228	241	0
12. I-215 NB On Ramp and 3rd St	4	336	65	5	261	0	0	0	0	0	247	120
13. I-215 NB Off Ramp and 2nd St	171	17	1148	285	438	0	0	0	0	0	295	118
14. H St/G St and 3rd St	0	98	110	33	192	94	14	200	120	41	208	7
15. G St and 2nd St	124	130	41	120	1212	146	101	192	25	38	275	41
16. G St and Rialto Ave	18	53	27	48	492	49	157	95	49	40	251	113
17. G St and Congress St	0	106	57	5	0	3	20	215	3	29	0	5
18. Parking Lot Entrance and Congress St	20	0	0	57	0	20	0	0	13	0	0	0
19. E St and 2nd St	43	196	67	215	890	55	39	392	83	43	381	17
20. E St and Rialto Ave	60	203	62	74	430	97	37	276	25	64	237	23
21. E St and Parking Lot Entrance	43	25	0	13	0	10	0	24	54	0	0	0
22. Arrowhead Ave and Rialto Ave	30	230	25	70	284	59	18	239	46	35	259	15
23. H St and 5th St	125	129	31	46	836	323	24	189	56	29	277	9
24. F St and Rialto Ave	47	0	71	38	372	54	23	0	28	29	240	34
25. E St and 5th St	47	174	74	37	709	85	53	283	24	68	301	19
26. E St and 4th St	23	302	99	6	74	31	14	414	22	13	32	12
27. E St-Inland Center Dr and Mill St	0	21	0	4	0	0	10	20	4	0	0	43

2014 PM TURNING MOVEMENT VOLUMES												
OPENING YEAR BUILD - FINAL VOLUMES (WITH 3RD STREET CLOSURE)												
	NORTHBOUND			EASTBOUND			SOUTHBOUND			WESTBOUND		
Intersection	L	T	R	L	T	R	L	T	R	L	T	R
1. K St and 3rd St	6	5	0	10	0	81	0	10	21	0	0	0
2. K St and 2nd St	36	3	172	4	515	22	45	3	11	95	369	8
3. K St and Rialto Ave	38	114	169	75	286	46	5	95	38	115	600	14
4. J St and 3rd St	24	0	0	0	0	20	0	0	0	0	0	0
5. J St and 2nd St	12	4	145	4	838	16	40	7	4	137	448	35
6. J St and Rialto Ave	19	81	48	59	375	10	68	51	22	91	611	20
7. I St and 3rd St	0	0	0	0	0	0	0	0	0	0	0	0
8. I St and 2nd St	10	4	32	39	808	15	14	20	19	98	633	8
9. I St and Rialto Ave	0	0	0	0	502	0	0	0	144	0	623	57
10. I-215 SB Off Ramp and 3rd St	0	0	0	0	10	0	104	337	3	88	4	0
11. I-215 SB On Ramp and 2nd St	0	0	0	0	651	170	56	0	371	729	372	0
12. I-215 NB On Ramp and 3rd St	12	497	226	3	113	0	0	0	0	0	87	395
13. I-215 NB Off Ramp and 2nd St	109	2	299	307	410	0	0	0	0	0	992	426
14. H St/G St and 3rd St	67	243	76	80	131	96	10	87	74	65	311	12
15. G St and 2nd St	362	193	50	104	513	46	40	135	75	84	1080	85
16. G St and Rialto Ave	71	195	22	49	358	28	94	98	67	28	528	233
17. G St and Congress St	0	216	34	2	0	2	13	202	0	55	0	17
18. Parking Lot Entrance and Congress St	25	0	0	14	0	25	0	0	47	0	0	0
19. E St and 2nd St	107	405	105	141	547	52	36	322	177	96	921	27
20. E St and Rialto Ave	130	581	102	71	333	113	31	421	47	97	531	26
21. E St and Parking Lot Entrance	11	24	0	44	0	36	0	25	13	0	0	0
22. Arrowhead Ave and Rialto Ave	91	400	48	46	335	67	15	294	60	27	381	17
23. H St and 5th St	434	304	54	63	485	241	35	206	134	75	876	40
24. F St and Rialto Ave	59	0	77	43	381	44	26	0	84	25	587	39
25. E St and 5th St	109	405	72	31	490	55	31	342	49	77	838	65
26. E St and 4th St	63	566	26	9	86	52	12	440	39	53	185	14
27. E St-Inland Center Dr and Mill St	0	20	0	4	0	0	36	21	4	0	0	11

2014 WITH PROJECT TURN VOLUMES (WITHOUT THE PARKING LOT/BUS/OFFICE TRIPS)

27. E St-Inland Center Dr and Mill St	NORTHBOUND				EASTBOUND				SOUTHBOUND				WESTBOUND				NORTHEASTBOUND			
NODE NUMBER	HL	L	T	R	L	T	R	HR	L	T	BR	R	L	BL	T	R	HL	BL	BR	HR
AM Peak Hour	23	50	171	54	71	376	69	2	27	168	37	42	55	128	286	20	4	108	182	38
PM Peak Hour	39	159	523	108	107	332	81	6	27	356	112	79	81	257	458	29	15	145	179	45

OPENING YEAR (2014) BUILD - 3RD STREET CLOSURE

27. E St-Inland Center Dr and Mill St	NORTHBOUND				EASTBOUND				SOUTHBOUND				WESTBOUND				NORTHEASTBOUND			
NODE NUMBER	HL	L	T	R	L	T	R	HR	L	T	BR	R	L	BL	T	R	HL	BL	BR	HR
AM Peak Hour	0	0	0	0	0	0	0	0	0	0	0	0	0	0	0	0	0	0	0	0
PM Peak Hour	0	0	0	0	0	0	0	0	0	0	0	0	0	0	0	0	0	0	0	0

2014 WITH PROJECT TURN VOLUMES - ADJUSTED (WITHOUT THE PARKING LOT/BUS/OFFICE TRIPS)

27. E St-Inland Center Dr and Mill St	NORTHBOUND				EASTBOUND				SOUTHBOUND				WESTBOUND				NORTHEASTBOUND			
NODE NUMBER	HL	L	T	R	L	T	R	HR	L	T	BR	R	L	BL	T	R	HL	BL	BR	HR
AM Peak Hour	23	50	171	54	71	376	69	2	27	168	37	42	55	128	286	20	4	108	182	38
PM Peak Hour	39	159	523	108	107	332	81	6	27	356	112	79	81	257	458	29	15	145	179	45

ADDITIONAL TRIPS DUE TO THE PROPOSED PARKING LOT

27. E St-Inland Center Dr and Mill St	NORTHBOUND				EASTBOUND				SOUTHBOUND				WESTBOUND				NORTHEASTBOUND			
NODE NUMBER	HL	L	T	R	L	T	R	HR	L	T	BR	R	L	BL	T	R	HL	BL	BR	HR
AM Peak Hour		0	0	0	0	0	0		10	0		0	0		0	43				
PM Peak Hour		0	0	0	0	0	0		36	0		0	0		0	11				

ADDITIONAL BUS TRIPS (PCE)

27. E St-Inland Center Dr and Mill St	NORTHBOUND				EASTBOUND				SOUTHBOUND				WESTBOUND				NORTHEASTBOUND			
NODE NUMBER	HL	L	T	R	L	T	R	HR	L	T	BR	R	L	BL	T	R	HL	BL	BR	HR
AM Peak Hour		0	20	0	4	0	0		0	20		4	0		0	0				
PM Peak Hour		0	20	0	4	0	0		0	20		4	0		0	0				

ADDITIONAL TRIPS DUE TO THE PROPOSED OFFICE SPACE

27. E St-Inland Center Dr and Mill St	NORTHBOUND				EASTBOUND				SOUTHBOUND				WESTBOUND				NORTHEASTBOUND			
NODE NUMBER	HL	L	T	R	L	T	R	HR	L	T	BR	R	L	BL	T	R	HL	BL	BR	HR
AM Peak Hour		0	1	0	0	0	0		0	0		0	0		0	0				
PM Peak Hour		0	0	0	0	0	0		0	1		0	0		0	0				

OPENING YEAR (2014) BUILD - FINAL VOLUMES (WITH 3RD STREET CLOSURE)

27. E St-Inland Center Dr and Mill St	NORTHBOUND				EASTBOUND				SOUTHBOUND				WESTBOUND				NORTHEASTBOUND			
NODE NUMBER	HL	L	T	R	L	T	R	HR	L	T	BR	R	L	BL	T	R	HL	BL	BR	HR
AM Peak Hour	23	50	192	54	75	376	69	2	37	188	37	46	55	128	286	63	4	108	182	38
PM Peak Hour	39	159	543	108	111	332	81	6	63	377	112	83	81	257	458	40	15	145	179	45

VOLUME DEVELOPMENT WORKSHEETS

FINAL ADJUSTED VOLUMES – ALL SCENARIOS

Intersection	EXISTING (2009/2010/2011) AM TURNING MOVEMENT COUNTS TOTAL (AUTO + PCE TRUCK)											
	NORTHBOUND			EASTBOUND			SOUTHBOUND			WESTBOUND		
	L	T	R	L	T	R	L	T	R	L	T	R
1. K St and 3rd St	8	9	14	1	50	1	0	0	0	31	71	1
2. K St and 2nd St	16	3	41	8	258	13	8	25	12	39	128	21
3. K St and Rialto Ave	36	21	124	11	423	35	3	30	23	115	190	1
4. J St and 3rd St	4	0	5	0	69	0	0	0	0	4	112	0
5. J St and 2nd St	2	5	55	3	414	5	3	1	0	8	193	9
6. J St and Rialto Ave	0	6	2	49	498	2	4	4	4	31	247	9
7. I St and 3rd St	11	3	33	0	49	4	169	415	61	38	45	0
8. I St and 2nd St	4	17	134	5	327	4	119	292	18	39	170	13
9. I St and Rialto Ave	8	65	66	86	433	20	125	126	99	40	214	17
10. I-215 SB Off Ramp and 3rd St	INTERSECTION DOESN'T EXIST											
11. I-215 SB On Ramp and 2nd St	0	0	0	0	449	172	0	0	0	211	234	0
12. I-215 NB On Ramp and 3rd St	INTERSECTION DOESN'T EXIST											
13. I-215 NB Ramps and 2nd St	193	0	1154	246	209	0	0	0	0	0	291	182
14. H St/G St and 3rd St	0	78	70	31	115	71	11	173	43	40	36	8
15. G St and 2nd St	95	81	30	110	1025	111	89	137	42	27	277	32
16. G St and Rialto Ave	14	50	22	52	481	31	82	81	47	36	249	64
17. G St and Congress St	0	104	0	5	0	3	0	209	3	0	0	0
18. Parking Lot Entrance and Congress St	INTERSECTION DOESN'T EXIST											
19. E St and 2nd St	38	142	62	207	883	41	42	315	86	33	374	18
20. E St and Rialto Ave	38	189	50	26	405	77	24	194	21	23	229	18
21. E St and Parking Lot Entrance	INTERSECTION DOESN'T EXIST											
22. Arrowhead Ave and Rialto Ave	31	231	25	67	277	65	12	223	32	35	227	12
23. H St and 5th St	120	108	34	27	778	304	25	177	48	27	263	8
24. F St and Rialto Ave	0	0	0	37	363	0	22	0	27	0	234	33
25. E St and 5th St	38	148	50	34	675	72	50	238	23	45	298	18
26. E St and 4th St	24	245	99	5	67	32	12	344	21	14	33	11
27. E St-Inland Center Dr and Mill St												

Intersection	EXISTING (2009/2010/2011) PM TURNING MOVEMENT COUNTS TOTAL (AUTO + PCE TRUCK)											
	NORTHBOUND			EASTBOUND			SOUTHBOUND			WESTBOUND		
	L	T	R	L	T	R	L	T	R	L	T	R
1. K St and 3rd St	5	2	11	2	88	67	0	0	0	42	124	1
2. K St and 2nd St	36	5	17	7	274	24	24	23	22	26	283	7
3. K St and Rialto Ave	32	34	130	6	350	35	5	42	22	108	518	13
4. J St and 3rd St	1	0	10	0	90	1	0	0	0	20	162	0
5. J St and 2nd St	10	5	25	6	463	10	7	6	4	14	293	9
6. J St and Rialto Ave	5	10	11	28	427	4	6	10	9	39	546	11
7. I St and 3rd St	8	2	33	0	87	20	65	255	63	44	53	0
8. I St and 2nd St	11	36	204	6	332	8	89	177	34	39	250	9
9. I St and Rialto Ave	14	135	66	86	363	17	44	91	103	46	554	38
10. I-215 SB Off Ramp and 3rd St	INTERSECTION DOESN'T EXIST											
11. I-215 SB On Ramp and 2nd St	0	0	0	0	488	166	0	0	0	678	327	0
12. I-215 NB On Ramp and 3rd St	INTERSECTION DOESN'T EXIST											
13. I-215 NB Ramps and 2nd St	130	1	269	265	201	0	0	0	0	0	922	522
14. H St/G St and 3rd St	15	311	58	68	84	42	11	153	20	75	64	13
15. G St and 2nd St	269	194	50	77	319	28	55	146	90	85	986	81
16. G St and Rialto Ave	54	174	13	55	338	25	40	93	70	23	498	152
17. G St and Congress St	0	210	0	2	0	2	0	197	0	0	0	0
18. Parking Lot Entrance and Congress St	INTERSECTION DOESN'T EXIST											
19. E St and 2nd St	102	335	96	138	536	50	36	266	173	88	886	26
20. E St and Rialto Ave	109	554	69	19	316	88	28	360	45	83	495	22
21. E St and Parking Lot Entrance	INTERSECTION DOESN'T EXIST											
22. Arrowhead Ave and Rialto Ave	85	373	44	34	289	61	14	274	52	25	349	16
23. H St and 5th St	397	269	50	58	444	217	32	179	125	66	810	37
24. F St and Rialto Ave	0	0	0	40	355	0	24	0	77	0	548	36
25. E St and 5th St	94	354	44	28	453	43	29	305	45	49	778	60
26. E St and 4th St	59	475	24	8	76	48	11	367	36	49	173	13
27. E St-Inland Center Dr and Mill St												

Intersection	2014 AM TURNING MOVEMENT VOLUMES OPENING YEAR NO BUILD											
	NORTHBOUND			EASTBOUND			SOUTHBOUND			WESTBOUND		
	L	T	R	L	T	R	L	T	R	L	T	R
1. K St and 3rd St	9	9	17	1	138	1	0	0	0	33	75	1
2. K St and 2nd St	17	3	45	9	288	14	9	26	13	41	186	22
3. K St and Rialto Ave	38	27	126	15	444	41	3	36	26	122	193	1
4. J St and 3rd St	4	0	5	0	159	10	0	0	0	5	118	0
5. J St and 2nd St	5	4	65	4	432	13	9	6	0	10	305	12
6. J St and Rialto Ave	5	7	3	47	532	2	6	2	4	34	270	19
7. I St and 3rd St	INTERSECTION DOESN'T EXIST											
8. I St and 2nd St	5	24	114	25	455	10	16	5	12	320	360	6
9. I St and Rialto Ave	9	66	66	91	450	21	125	127	108	40	228	17
10. I-215 SB Off Ramp and 3rd St	0	0	0	0	160	4	245	404	2	152	89	0
11. I-215 SB On Ramp and 2nd St	0	0	0	0	452	141	98	10	451	221	229	0
12. I-215 NB On Ramp and 3rd St	1	236	15	105	310	0	0	0	0	0	247	120
13. I-215 NB Ramps and 2nd St	171	17	1137	132	423	0	0	0	0	0	276	118
14. H St/G St and 3rd St	0	78	98	33	192	91	14	173	120	37	208	7
15. G St and 2nd St	105	102	41	116	1212	124	101	159	25	38	275	41
16. G St and Rialto Ave	14	53	27	48	491	30	104	93	49	40	251	66
17. G St and Congress St	0	106	0	5	0	3	0	215	3	0	0	0
18. Parking Lot Entrance and Congress St	INTERSECTION DOESN'T EXIST											
19. E St and 2nd St	43	151	63	215	890	55	39	334	83	39	381	17
20. E St and Rialto Ave	35	200	53	28	430	73	37	216	23	24	234	23
21. E St and Parking Lot Entrance	INTERSECTION DOESN'T EXIST											
22. Arrowhead Ave and Rialto Ave	29	230	25	67	277	59	18	239	34	35	229	15
23. H St and 5th St	119	115	31	46	828	317	24	172	56	25	269	9
24. F St and Rialto Ave	0	0	0	38	372	0	23	0	28	0	240	34
25. E St and 5th St	39	159	52	37	705	77	53	255	24	46	297	19
26. E St and 4th St	23	257	99	6	70	31	14	356	22	13	32	12
27. E St-Inland Center Dr and Mill St												

Intersection	2014 PM TURNING MOVEMENT VOLUMES OPENING YEAR NO BUILD											
	NORTHBOUND			EASTBOUND			SOUTHBOUND			WESTBOUND		
	L	T	R	L	T	R	L	T	R	L	T	R
1. K St and 3rd St	6	2	14	2	209	73	0	0	0	46	135	1
2. K St and 2nd St	36	6	24	9	311	22	37	27	23	33	301	9
3. K St and Rialto Ave	35	38	138	6	358	38	5	47	24	115	532	14
4. J St and 3rd St	2	0	14	0	216	21	0	0	0	23	178	0
5. J St and 2nd St	12	4	35	7	478	8	22	15	4	20	314	13
6. J St and Rialto Ave	9	6	17	24	458	3	13	3	8	46	567	20
7. I St and 3rd St	INTERSECTION DOESN'T EXIST											
8. I St and 2nd St	20	27	208	11	360	15	14	20	19	221	360	8
9. I St and Rialto Ave	13	151	62	104	380	15	55	96	116	45	562	57
10. I-215 SB Off Ramp and 3rd St	0	0	0	0	206	13	104	279	61	8	84	0
11. I-215 SB On Ramp and 2nd St	0	0	0	0	431	157	56	13	233	718	360	0
12. I-215 NB On Ramp and 3rd St	5	427	93	71	241	0	0	0	0	0	87	393
13. I-215 NB Ramps and 2nd St	109	2	294	99	398	0	0	0	0	0	969	424
14. H St/G St and 3rd St	65	219	64	80	131	96	10	61	74	61	311	12
15. G St and 2nd St	337	159	50	100	513	33	40	104	75	84	1080	85
16. G St and Rialto Ave	56	194	22	49	358	23	58	98	67	28	527	175
17. G St and Congress St	0	216	0	2	0	2	0	202	0	0	0	0
18. Parking Lot Entrance and Congress St	INTERSECTION DOESN'T EXIST											
19. E St and 2nd St	107	348	101	141	547	52	36	275	177	92	921	27
20. E St and Rialto Ave	106	570	69	21	331	88	31	370	47	87	531	26
21. E St and Parking Lot Entrance	INTERSECTION DOESN'T EXIST											
22. Arrowhead Ave and Rialto Ave	91	400	48	36	310	66	15	294	57	27	374	17
23. H St and 5th St	426	288	54	63	477	233	35	192	134	71	868	40
24. F St and Rialto Ave	0	0	0	43	381	0	26	0	84	0	587	39
25. E St and 5th St	101	380	48	31	486	47	31	327	49	53	834	65
26. E St and 4th St	63	509	26	9	82	52	12	393	39	53	185	14
27. E St-Inland Center Dr and Mill St												

Intersection	2014 AM TURNING MOVEMENT VOLUMES OPENING YEAR BUILD											
	NORTHBOUND			EASTBOUND			SOUTHBOUND			WESTBOUND		
	L	T	R	L	T	R	L	T	R	L	T	R
1. K St and 3rd St	9	5	0	7	0	9	0	10	13	0	0	0
2. K St and 2nd St	17	1	106	5	423	14	17	5	11	114	229	16
3. K St and Rialto Ave	44	60	159	41	422	57	3	100	35	122	226	1
4. J St and 3rd St	21	0	0	0	0	19	0	0	0	0	0	0
5. J St and 2nd St	5	4	163	3	643	17	26	2	0	207	425	29
6. J St and Rialto Ave	8	40	36	112	473	7	131	65	13	74	291	19
7. I St and 3rd St	INTERSECTION DOESN'T EXIST											
8. I St and 2nd St	3	2	9	52	752	10	16	5	12	85	694	6
9. I St and Rialto Ave	0	0	0	0	661	0	0	0	125	0	272	17
10. I-215 SB Off Ramp and 3rd St	0	0	0	0	8	0	248	409	0	237	4	0
11. I-215 SB On Ramp and 2nd St	0	0	0	0	617	145	101	6	538	228	241	0
12. I-215 NB On Ramp and 3rd St	4	336	65	5	261	0	0	0	0	0	247	120
13. I-215 NB Ramps and 2nd St	171	17	1148	285	438	0	0	0	0	0	295	118
14. H St/G St and 3rd St	0	98	110	33	192	94	14	200	120	41	208	7
15. G St and 2nd St	124	130	41	120	1212	146	101	192	25	38	275	41
16. G St and Rialto Ave	18	53	27	48	492	49	157	95	49	40	251	113
17. G St and Congress St	0	106	57	5	0	3	20	215	3	29	0	5
18. Parking Lot Entrance and Congress St	20	0	0	57	0	20	0	0	13	0	0	0
19. E St and 2nd St	43	196	67	215	890	55	39	392	83	43	381	17
20. E St and Rialto Ave	60	203	62	74	430	97	37	276	25	64	237	23
21. E St and Parking Lot Entrance	43	25	0	13	0	10	0	24	54	0	0	0
22. Arrowhead Ave and Rialto Ave	30	230	25	70	284	59	18	239	46	35	259	15
23. H St and 5th St	125	129	31	46	836	323	24	189	56	29	277	9
24. F St and Rialto Ave	47	0	71	38	372	54	23	0	28	29	240	34
25. E St and 5th St	47	174	74	37	709	85	53	283	24	68	301	19
26. E St and 4th St	23	302	99	6	74	31	14	414	22	13	32	12
27. E St-Inland Center Dr and Mill St	0	21	0	4	0	0	10	20	4	0	0	43

Intersection	2014 PM TURNING MOVEMENT VOLUMES OPENING YEAR BUILD											
	NORTHBOUND			EASTBOUND			SOUTHBOUND			WESTBOUND		
	L	T	R	L	T	R	L	T	R	L	T	R
1. K St and 3rd St	6	5	0	10	0	81	0	10	21	0	0	0
2. K St and 2nd St	36	3	172	4	515	22	45	3	11	95	369	8
3. K St and Rialto Ave	38	114	169	75	286	46	5	95	38	115	600	14
4. J St and 3rd St	24	0	0	0	0	20	0	0	0	0	0	0
5. J St and 2nd St	12	4	145	4	838	16	40	7	4	137	448	35
6. J St and Rialto Ave	19	81	48	59	375	10	68	51	22	91	611	20
7. I St and 3rd St	INTERSECTION DOESN'T EXIST											
8. I St and 2nd St	10	4	32	39	808	15	14	20	19	98	633	8
9. I St and Rialto Ave	0	0	0	0	502	0	0	0	144	0	623	57
10. I-215 SB Off Ramp and 3rd St	0	0	0	0	10	0	104	337	3	88	4	0
11. I-215 SB On Ramp and 2nd St	0	0	0	0	651	170	56	0	371	729	372	0
12. I-215 NB On Ramp and 3rd St	12	497	226	3	113	0	0	0	0	0	87	395
13. I-215 NB Ramps and 2nd St	109	2	299	307	410	0	0	0	0	0	992	426
14. H St/G St and 3rd St	67	243	76	80	131	96	10	87	74	65	311	12
15. G St and 2nd St	362	193	50	104	513	46	40	135	75	84	1080	85
16. G St and Rialto Ave	71	195	22	49	358	28	94	98	67	28	528	233
17. G St and Congress St	0	216	34	2	0	2	13	202	0	55	0	17
18. Parking Lot Entrance and Congress St	25	0	0	14	0	25	0	0	47	0	0	0
19. E St and 2nd St	107	405	105	141	547	52	36	322	177	96	921	27
20. E St and Rialto Ave	130	581	102	71	333	113	31	421	47	97	531	26
21. E St and Parking Lot Entrance	11	24	0	44	0	36	0	25	13	0	0	0
22. Arrowhead Ave and Rialto Ave	91	400	48	46	335	67	15	294	60	27	381	17
23. H St and 5th St	434	304	54	63	485	241	35	206	134	75	876	40
24. F St and Rialto Ave	59	0	77	43	381	44	26	0	84	25	587	39
25. E St and 5th St	109	405	72	31	490	55	31	342	49	77	838	65
26. E St and 4th St	63	566	26	9	86	52	12	440	39	53	185	14
27. E St-Inland Center Dr and Mill St	0	20	0	4	0	0	36	21	4	0	0	11

Intersection	2035 AM TURNING MOVEMENT VOLUMES FORECAST YEAR NO BUILD											
	NORTHBOUND			EASTBOUND			SOUTHBOUND			WESTBOUND		
	L	T	R	L	T	R	L	T	R	L	T	R
1. K St and 3rd St	11	9	27	1	190	1	0	0	0	41	78	1
2. K St and 2nd St	23	5	60	12	416	20	11	33	16	50	270	28
3. K St and Rialto Ave	49	53	134	33	531	67	5	60	38	153	205	2
4. J St and 3rd St	6	0	6	0	222	20	0	0	0	12	124	0
5. J St and 2nd St	20	1	106	10	509	36	17	10	0	18	354	23
6. J St and Rialto Ave	25	9	5	40	674	5	15	2	3	48	368	60
7. I St and 3rd St	INTERSECTION DOESN'T EXIST											
8. I St and 2nd St	12	31	113	29	623	34	19	16	31	234	348	7
9. I St and Rialto Ave	12	69	67	110	522	25	124	131	144	39	289	16
10. I-215 SB Off Ramp and 3rd St	0	0	0	0	235	10	563	417	18	167	72	0
11. I-215 SB On Ramp and 2nd St	0	0	0	0	719	36	195	12	379	278	210	0
12. I-215 NB On Ramp and 3rd St	2	278	29	242	558	0	0	0	0	0	236	154
13. I-215 NB Ramps and 2nd St	81	33	1114	115	800	0	0	0	0	0	419	159
14. H St/G St and 3rd St	0	80	214	41	466	174	26	256	202	22	202	2
15. G St and 2nd St	148	191	85	139	1546	181	150	250	38	83	432	77
16. G St and Rialto Ave	15	64	49	33	531	26	196	144	57	55	260	75
17. G St and Congress St	0	126	0	7	0	4	0	255	6	0	0	0
18. Parking Lot Entrance and Congress St	INTERSECTION DOESN'T EXIST											
19. E St and 2nd St	83	210	75	269	940	153	18	469	67	74	429	14
20. E St and Rialto Ave	19	271	74	38	604	41	129	370	39	27	265	57
21. E St and Parking Lot Entrance	INTERSECTION DOESN'T EXIST											
22. Arrowhead Ave and Rialto Ave	9	219	25	64	277	19	61	349	49	39	243	41
23. H St and 5th St	111	167	12	185	1174	407	22	138	114	10	315	15
24. F St and Rialto Ave	0	0	0	44	434	0	27	0	34	0	281	41
25. E St and 5th St	47	236	64	55	915	108	77	371	34	55	289	28
26. E St and 4th St	16	341	100	10	88	23	31	446	34	8	27	19
27. E St-Inland Center Dr and Mill St												

Intersection	2035 PM TURNING MOVEMENT VOLUMES FORECAST YEAR NO BUILD											
	NORTHBOUND			EASTBOUND			SOUTHBOUND			WESTBOUND		
	L	T	R	L	T	R	L	T	R	L	T	R
1. K St and 3rd St	8	2	27	2	299	99	0	0	0	61	143	1
2. K St and 2nd St	38	8	53	19	464	15	93	42	27	62	375	17
3. K St and Rialto Ave	49	55	173	8	393	53	6	69	32	145	593	16
4. J St and 3rd St	5	0	32	0	346	30	0	0	0	36	190	0
5. J St and 2nd St	21	1	76	10	640	31	41	16	5	43	555	29
6. J St and Rialto Ave	26	6	41	6	586	5	40	4	2	75	655	60
7. I St and 3rd St	INTERSECTION DOESN'T EXIST											
8. I St and 2nd St	56	20	197	17	517	45	8	23	8	274	573	13
9. I St and Rialto Ave	7	197	45	131	450	9	102	116	169	38	594	65
10. I-215 SB Off Ramp and 3rd St	0	0	0	0	371	32	340	354	75	115	132	0
11. I-215 SB On Ramp and 2nd St	0	0	0	0	565	157	105	32	365	886	499	0
12. I-215 NB On Ramp and 3rd St	7	433	160	302	412	0	0	0	0	0	246	586
13. I-215 NB Ramps and 2nd St	21	6	400	150	531	0	0	0	0	0	1363	444
14. H St/G St and 3rd St	178	296	91	91	187	157	7	162	98	100	401	6
15. G St and 2nd St	390	242	52	198	738	55	72	170	163	82	1473	104
16. G St and Rialto Ave	63	277	61	24	441	12	132	118	54	48	649	274
17. G St and Congress St	0	257	0	4	0	4	0	241	0	0	0	0
18. Parking Lot Entrance and Congress St	INTERSECTION DOESN'T EXIST											
19. E St and 2nd St	141	439	130	157	627	65	41	336	205	124	1168	33
20. E St and Rialto Ave	89	685	69	32	437	89	48	442	62	117	785	53
21. E St and Parking Lot Entrance	INTERSECTION DOESN'T EXIST											
22. Arrowhead Ave and Rialto Ave	51	542	132	22	396	24	50	291	39	50	480	52
23. H St and 5th St	429	518	15	271	701	340	15	134	244	19	1266	49
24. F St and Rialto Ave	0	0	0	43	420	0	36	0	88	0	665	49
25. E St and 5th St	132	452	72	57	561	68	68	332	75	72	929	60
26. E St and 4th St	57	586	82	19	80	65	10	457	51	34	169	57
27. E St-Inland Center Dr and Mill St												

Intersection	2035 AM TURNING MOVEMENT VOLUMES FORECAST YEAR BUILD											
	NORTHBOUND			EASTBOUND			SOUTHBOUND			WESTBOUND		
	L	T	R	L	T	R	L	T	R	L	T	R
1. K St and 3rd St	11	7	0	9	0	9	0	10	13	0	0	0
2. K St and 2nd St	23	3	152	5	604	20	19	7	11	125	312	16
3. K St and Rialto Ave	56	88	168	88	483	80	5	126	47	153	240	2
4. J St and 3rd St	23	0	0	0	0	31	0	0	0	0	0	0
5. J St and 2nd St	20	1	195	9	807	43	40	3	0	216	475	40
6. J St and Rialto Ave	30	43	38	95	593	17	139	67	12	87	389	60
7. I St and 3rd St	INTERSECTION DOESN'T EXIST											
8. I St and 2nd St	38	1	4	67	990	34	19	16	31	26	654	7
9. I St and Rialto Ave	0	0	0	0	733	0	0	0	161	0	332	16
10. I-215 SB Off Ramp and 3rd St	0	0	0	0	12	0	566	437	1	236	3	0
11. I-215 SB On Ramp and 2nd St	0	0	0	0	940	46	198	2	465	285	222	0
12. I-215 NB On Ramp and 3rd St	2	487	29	33	547	0	0	0	0	0	236	154
13. I-215 NB Ramps and 2nd St	81	33	1125	324	815	0	0	0	0	0	438	159
14. H St/G St and 3rd St	0	100	226	41	466	177	26	283	202	26	202	2
15. G St and 2nd St	167	219	85	143	1546	203	150	283	38	83	432	77
16. G St and Rialto Ave	19	64	49	33	532	45	249	146	57	55	260	122
17. G St and Congress St	0	126	57	7	0	4	20	255	6	29	0	5
18. Parking Lot Entrance and Congress St	20	0	0	57	0	20	0	0	13	0	0	0
19. E St and 2nd St	83	255	79	269	940	153	18	527	67	78	429	14
20. E St and Rialto Ave	44	274	83	84	604	65	129	430	41	67	268	57
21. E St and Parking Lot Entrance	43	25	0	13	0	10	0	24	54	0	0	0
22. Arrowhead Ave and Rialto Ave	10	219	25	67	284	19	61	349	61	39	273	41
23. H St and 5th St	117	181	12	185	1182	413	22	155	114	14	323	15
24. F St and Rialto Ave	47	0	71	44	434	54	27	0	34	29	281	41
25. E St and 5th St	55	251	86	55	919	116	77	399	34	77	293	28
26. E St and 4th St	16	386	100	10	92	23	31	504	34	8	27	19
27. E St-Inland Center Dr and Mill St	0	21	0	4	0	0	10	20	4	0	0	43

Intersection	2035 PM TURNING MOVEMENT VOLUMES FORECAST YEAR BUILD											
	NORTHBOUND			EASTBOUND			SOUTHBOUND			WESTBOUND		
	L	T	R	L	T	R	L	T	R	L	T	R
1. K St and 3rd St	8	6	0	15	0	107	0	11	27	0	0	0
2. K St and 2nd St	38	4	196	8	759	15	101	7	12	140	473	11
3. K St and Rialto Ave	53	141	196	61	327	58	6	127	52	145	671	16
4. J St and 3rd St	33	0	0	0	0	57	0	0	0	0	0	0
5. J St and 2nd St	21	1	265	2	1096	39	100	8	5	223	735	57
6. J St and Rialto Ave	29	117	63	84	474	9	142	62	22	113	710	60
7. I St and 3rd St	INTERSECTION DOESN'T EXIST											
8. I St and 2nd St	28	1	6	44	1154	45	8	23	8	95	961	13
9. I St and Rialto Ave	0	0	0	0	602	0	0	0	208	0	648	65
10. I-215 SB Off Ramp and 3rd St	0	0	0	0	18	0	340	426	3	240	7	0
11. I-215 SB On Ramp and 2nd St	0	0	0	0	909	189	105	0	562	897	511	0
12. I-215 NB On Ramp and 3rd St	9	722	203	15	346	0	0	0	0	0	246	588
13. I-215 NB Ramps and 2nd St	21	6	405	482	543	0	0	0	0	0	1386	446
14. H St/G St and 3rd St	180	320	103	91	187	157	7	188	98	104	401	6
15. G St and 2nd St	415	276	52	202	738	68	72	201	163	82	1473	104
16. G St and Rialto Ave	78	278	61	24	441	17	168	118	54	48	650	332
17. G St and Congress St	0	257	34	4	0	4	13	241	0	55	0	17
18. Parking Lot Entrance and Congress St	25	0	0	14	0	25	0	0	47	0	0	0
19. E St and 2nd St	141	496	134	157	627	65	41	383	205	128	1168	33
20. E St and Rialto Ave	113	696	102	82	439	114	48	493	62	127	785	53
21. E St and Parking Lot Entrance	11	24	0	44	0	36	0	25	13	0	0	0
22. Arrowhead Ave and Rialto Ave	51	542	132	32	421	25	50	291	42	50	487	52
23. H St and 5th St	437	534	15	271	709	348	15	148	244	23	1274	49
24. F St and Rialto Ave	59	0	77	43	420	44	36	0	88	25	665	49
25. E St and 5th St	140	477	96	57	565	76	68	347	75	96	933	60
26. E St and 4th St	57	643	82	19	84	65	10	504	51	34	169	57
27. E St-Inland Center Dr and Mill St	0	20	0	4	0	0	36	21	4	0	0	11

2011 EXISTING TURN VOLUMES	E STREET				INLAND CENTER DRIVE				MILL STREET				E STREET				MILL STREET			
27. E St-Inland Center Dr and Mill St	NORTHBOUND				NORTHEASTBOUND				EASTBOUND				SOUTHBOUND				WESTBOUND			
	HL	L	T	R	HL	BL	BR	HR	L	T	R	HR	L	T	BR	R	L	BL	T	R
AM PK HR	22	48	164	52	4	108	181	38	65	342	63	2	25	158	35	40	53	125	279	20
PM PK HR	37	151	496	103	15	144	179	45	101	313	76	5	26	348	110	77	76	243	433	27

2014 NO BUILD TURN VOLUMES	E STREET				INLAND CENTER DRIVE				MILL STREET				E STREET				MILL STREET			
27. E St-Inland Center Dr and Mill St	NORTHBOUND				NORTHEASTBOUND				EASTBOUND				SOUTHBOUND				WESTBOUND			
	HL	L	T	R	HL	BL	BR	HR	L	T	R	HR	L	T	BR	R	L	BL	T	R
AM PK HR	23	50	171	54	4	108	182	38	71	376	69	2	27	168	37	42	55	128	286	20
PM PK HR	39	159	523	108	15	145	179	45	107	332	81	6	27	356	112	79	81	257	458	29

2014 BUILD TURN VOLUMES	E STREET				INLAND CENTER DRIVE				MILL STREET				E STREET				MILL STREET			
27. E St-Inland Center Dr and Mill St	NORTHBOUND				NORTHEASTBOUND				EASTBOUND				SOUTHBOUND				WESTBOUND			
	HL	L	T	R	HL	BL	BR	HR	L	T	R	HR	L	T	BR	R	L	BL	T	R
AM PK HR	23	50	192	54	4	108	182	38	75	376	69	2	37	188	37	46	55	128	286	63
PM PK HR	39	159	543	108	15	145	179	45	111	332	81	6	63	377	112	83	81	257	458	40

2035 NO BUILD TURN VOLUMES	E STREET				INLAND CENTER DRIVE				MILL STREET				E STREET				MILL STREET			
27. E St-Inland Center Dr and Mill St	NORTHBOUND				NORTHEASTBOUND				EASTBOUND				SOUTHBOUND				WESTBOUND			
	HL	L	T	R	HL	BL	BR	HR	L	T	R	HR	L	T	BR	R	L	BL	T	R
AM PK HR	29	63	217	69	4	111	187	39	117	615	113	4	38	239	52	60	64	149	335	24
PM PK HR	53	216	711	147	15	145	179	45	150	466	114	8	31	411	130	92	112	355	633	40

2035 BUILD TURN VOLUMES	E STREET				INLAND CENTER DRIVE				MILL STREET				E STREET				MILL STREET			
27. E St-Inland Center Dr and Mill St	NORTHBOUND				NORTHEASTBOUND				EASTBOUND				SOUTHBOUND				WESTBOUND			
	HL	L	T	R	HL	BL	BR	HR	L	T	R	HR	L	T	BR	R	L	BL	T	R
AM PK HR	29	63	238	69	4	111	187	39	121	615	113	4	48	259	52	64	64	149	335	67
PM PK HR	53	216	731	147	15	145	179	45	154	466	114	8	67	432	130	96	112	355	633	51

APPENDIX C: BUS ROUTES AND SCHEDULES

OMNITRANS ROUTE 1: ARMC – SAN BERNARDINO – DEL ROSA

1 ARMC - SAN BERNARDINO - DEL ROSA

Bus Route
Tripper Service
Timepoint—Look for the matching symbol in the timetable section.
Metrolink Station
Point of interest
Medical Center
Transfer Point
Connecting Route(s)

FREQUENCY

WKDY	SAT	SUN
15/30	30	30

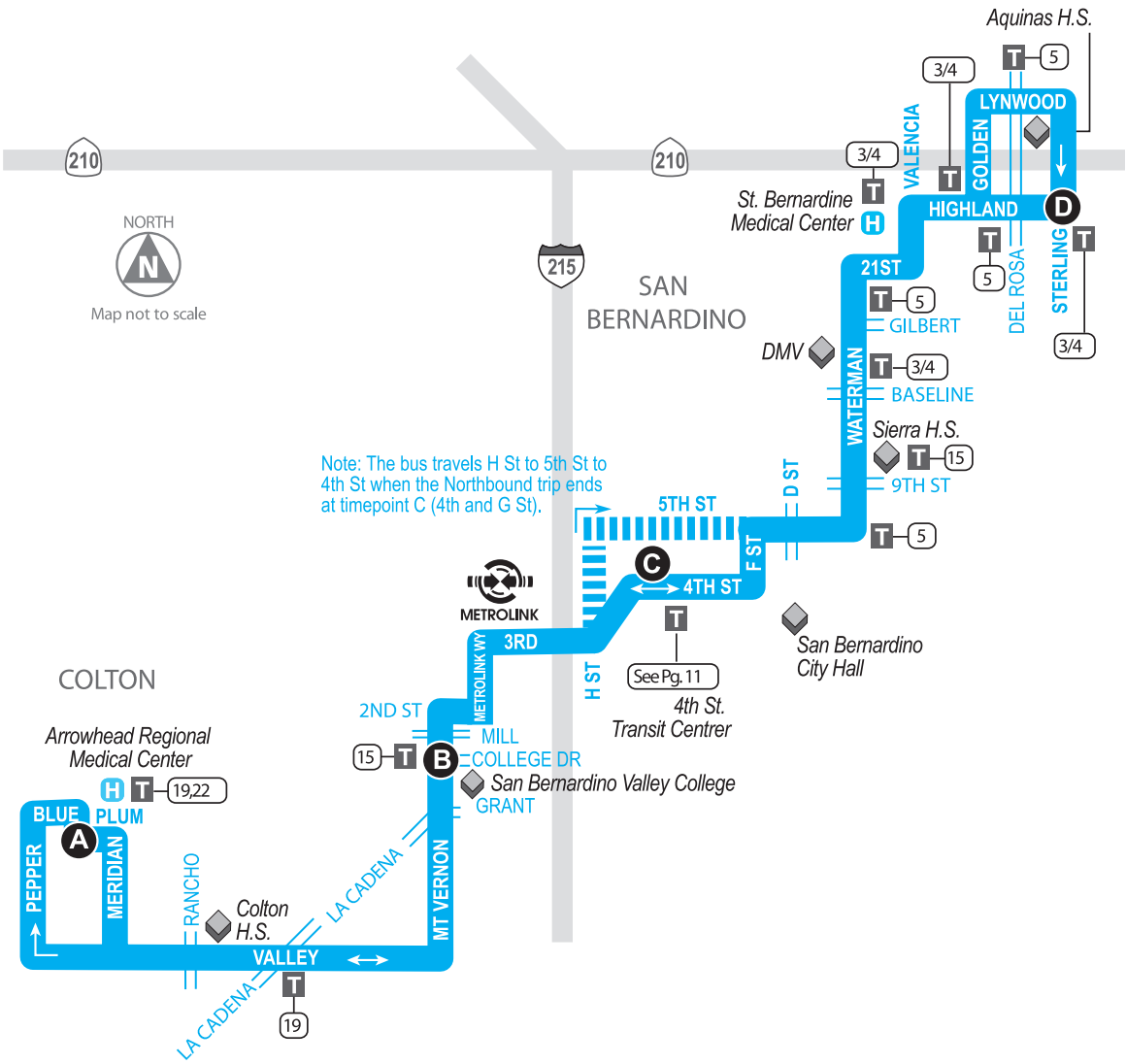

ROUTE 1: MONDAY – FRIDAY

NORTHBOUND					SOUTHBOUND				
A Arrowhead Regional Medical Center	B Mt. Vernon & College	C 4th & G	D Highland & Sterling		D Highland & Sterling	C 4th & G		B Mt. Vernon & College	A Arrowhead Regional Medical Center
					4:50	5:12	5:14	5:23	5:34
					5:18	5:35	5:37	5:50	6:01
							5:56	6:07	6:19
					5:51	6:09	6:11	6:21	6:33
5:45	5:59		6:12				6:22	6:35	6:49
					6:12	6:35	6:37	6:50	7:04
6:15	6:29		6:42				6:52	7:05	7:19
5:33	5:47	6:00	6:08	6:28	6:38	7:05	7:07	7:20	7:34
6:45	6:59		7:12				7:22	7:35	7:49
6:06	6:20	6:29	6:32	6:58	7:08	7:35	7:37	7:50	8:04
7:15	7:29		7:42				7:52	8:05	8:19
6:30	6:44	6:57	7:00	7:28	7:38	8:05	8:07	8:20	8:34
7:45	7:59		8:12				8:22	8:35	8:49
7:00	7:14	7:27	7:30	7:58	8:08	8:35	8:37	8:50	9:04
8:15	8:29		8:42				8:52	9:05	9:19
7:30	7:44	7:57	8:00	8:28	8:38	9:05	9:07	9:20	9:34
8:45	8:59		9:12				9:22	9:35	9:49
8:00	8:14	8:27	8:30	8:58	9:08	9:35	9:37	9:50	10:04
9:15	9:29		9:42				9:52	10:05	10:19
8:30	8:44	8:57	9:00	9:28	9:38	10:05	10:07	10:20	10:34
9:45	9:59		10:12				10:22	10:35	10:49
9:00	9:14	9:27	9:30	9:58	10:08	10:35	10:37	10:50	11:04
10:15	10:29		10:42				10:52	11:05	11:19
9:30	9:44	9:57	10:00	10:28	10:38	11:05	11:07	11:20	11:34
10:45	10:59		11:12				11:22	11:35	11:49
10:00	10:14	10:27	10:30	10:58	11:08	11:35	11:37	11:50	**12:04**
11:15	11:29		11:42				11:52	**12:05**	**12:19**
10:30	10:44	10:57	11:00	11:28	11:38	**12:05**	**12:07**	**12:20**	**12:34**
11:45	11:59		**12:12**				**12:22**	**12:35**	**12:49**
11:00	11:14	11:27	11:30	11:58	**12:08**	**12:35**	**12:37**	**12:50**	**1:04**
12:15	**12:29**		**12:42**				**12:52**	**1:05**	**1:19**
11:30	**11:44**	**11:57**	**12:00**	**12:28**	**12:38**	**1:05**	**1:07**	**1:20**	**1:34**
12:45	**12:59**		**1:12**				**1:22**	**1:35**	**1:49**
12:00	**12:14**	**12:27**	**12:30**	**12:58**	**1:08**	**1:35**	**1:37**	**1:50**	**2:04**
1:15	**1:29**		**1:42**				**1:52**	**2:05**	**2:19**
12:30	**12:44**	**12:57**	**1:00**	**1:28**	**1:38**	**2:05**	**2:07**	**2:20**	**2:34**
1:45	**1:59**		**2:12**				**2:22**	**2:35**	**2:49**
1:00	**1:14**	**1:27**	**1:30**	**1:58**	**2:08**	**2:35**	**2:37**	**2:50**	**3:04**
2:15	**2:29**		**2:42**				**2:52**	**3:05**	**3:19**
1:30	**1:44**	**1:57**	**2:00**	**2:28**	**2:38**	**3:05**	**3:07**	**3:20**	**3:34**
2:45	**2:59**		**3:12**				**3:22**	**3:35**	**3:49**
2:00	**2:14**	**2:27**	**2:30**	**2:58**	**3:08**	**3:35**	**3:37**	**3:50**	**4:04**
3:15	**3:29**		**3:42**				**3:52**	**4:05**	**4:19**
2:30	**2:44**	**2:57**	**3:00**	**3:28**	**3:38**	**4:05**	**4:07**	**4:20**	**4:34**
3:45	**3:59**		**4:12**				**4:22**	**4:35**	**4:49**
3:00	**3:14**	**3:27**	**3:30**	**3:58**	**4:08**	**4:35**	**4:37**	**4:50**	**5:04**
4:15	**4:29**		**4:42**				**4:52**	**5:05**	**5:19**
3:30	**3:44**	**3:57**	**4:00**	**4:28**	**4:38**	**5:05**	**5:07**	**5:20**	**5:34**
4:45	**4:59**		**5:12**				**5:22**	**5:35**	**5:49**
4:00	**4:14**	**4:27**	**4:30**	**4:58**	**5:08**	**5:35**	**5:37**	**5:50**	**6:04**
5:15	**5:29**		**5:42**				**5:52**	**6:05**	**6:19**
4:30	**4:44**	**4:57**	**5:00**	**5:28**	**5:38**	**6:05**	**6:07**	**6:20**	**6:34**
5:45	**5:59**		**6:12**				**6:22**	**6:35**	**6:49**
5:00	**5:14**	**5:27**	**5:30**	**5:58**	**6:08**	**6:35**	**6:37**	**6:50**	**7:04**
6:15	**6:29**		**6:42**				**6:52**	**7:05**	**7:19**
5:30	**5:44**	**5:57**	**6:00**	**6:28**	**6:38**	**7:05**	**7:07**	**7:20**	**7:34**
6:00	**6:14**	**6:27**	**6:30**	**6:58**	**7:08**	**7:35**	**7:37**	**7:50**	**8:04**
6:30	**6:44**	**6:57**	**7:00**	**7:28**	**7:38**	**8:05**	**8:07**	**8:20**	**8:34**
6:45	**6:59**		**7:12**						
7:00	**7:14**	**7:27**	**7:30**	**7:58**	**8:08**	**8:35**	**8:37**	**8:50**	**9:04**
7:30	**7:44**	**7:57**	**8:00**	**8:28**	**8:38**	**9:05**	**9:07**	**9:20**	**9:34**
8:00	**8:14**	**8:27**	**8:30**	**8:53**	**9:08**	**9:35**	**9:37**	**9:50**	**10:04**
8:34	**8:48**		**9:01**						
9:05	**9:19**	**9:32**	**9:35**	**9:58**	**10:05**	**10:32**	**10:34**	**10:47**	**11:01**
9:42	**9:56**		**10:09**				**10:22**	**10:35**	**10:49**

ROUTE 1: SATURDAY

A Arrowhead Regional Medical Center	B Mt. Vernon & College	C 4th & G		D Highland & Sterling	D Highland & Sterling	C 4th & G		B Mt. Vernon & College	A Arrowhead Regional Medical Center
NORTHBOUND					**SOUTHBOUND**				
6:07	6:21	6:32	6:34	7:00	7:07	7:29	7:32	7:44	8:00
7:07	7:21	7:32	7:34	8:00	8:07	8:29	8:32	8:44	9:00
7:37	7:51	8:02	8:04	8:30	8:37	8:59	9:02	9:14	9:30
8:07	8:21	8:32	8:34	9:00	9:07	9:29	9:32	9:44	10:00
8:37	8:51	9:02	9:04	9:30	9:37	9:59	10:02	10:14	10:30
9:07	9:21	9:32	9:34	10:00	10:07	10:29	10:32	10:44	11:00
9:37	9:51	10:02	10:04	10:30	10:37	10:59	11:02	11:14	11:30
10:07	10:21	10:32	10:34	11:00	11:07	11:29	11:32	11:44	**12:00**
10:37	10:51	11:02	11:04	11:30	11:37	11:59	**12:02**	**12:14**	**12:30**
11:07	11:21	11:32	11:34	**12:00**	**12:07**	**12:29**	**12:32**	**12:44**	**1:00**
11:37	11:51	**12:02**	**12:04**	**12:30**	**12:37**	**12:59**	**1:02**	**1:14**	**1:30**
12:07	**12:21**	**12:32**	**12:34**	**1:00**	**1:07**	**1:29**	**1:32**	**1:44**	**2:00**
12:37	**12:51**	**1:02**	**1:04**	**1:30**	**1:37**	**1:59**	**2:02**	**2:14**	**2:30**
1:07	**1:21**	**1:32**	**1:34**	**2:00**	**2:07**	**2:29**	**2:32**	**2:44**	**3:00**
1:37	**1:51**	**2:02**	**2:04**	**2:30**	**2:37**	**2:59**	**3:02**	**3:14**	**3:30**
2:07	**2:21**	**2:32**	**2:34**	**3:00**	**3:07**	**3:29**	**3:32**	**3:44**	**4:00**
2:37	**2:51**	**3:02**	**3:04**	**3:30**	**3:37**	**3:59**	**4:02**	**4:14**	**4:30**
3:07	**3:21**	**3:32**	**3:34**	**4:00**	**4:07**	**4:29**	**4:32**	**4:44**	**5:00**
3:37	**3:51**	**4:02**	**4:04**	**4:30**	**4:37**	**4:59**	**5:02**	**5:14**	**5:30**
4:07	**4:21**	**4:32**	**4:34**	**5:00**	**5:07**	**5:29**	**5:32**	**5:44**	**6:00**
4:37	**4:51**	**5:02**	**5:04**	**5:30**	**5:37**	**5:59**	**6:02**	**6:14**	**6:30**
5:07	**5:21**	**5:32**	**5:34**	**6:00**	**6:07**	**6:30**			
5:37	**5:49**		**6:00**						
6:07	**6:21**	**6:32**	**6:34**	**7:00**	**7:07**	**7:30**			
6:37	**6:51**	**7:02**	**7:04**	**7:30**					

ROUTE 1: SUNDAY

A Arrowhead Regional Medical Center	B Mt. Vernon & College	C 4th & G		D Highland & Sterling	D Highland & Sterling	C 4th & G		B Mt. Vernon & College	A Arrowhead Regional Medical Center
NORTHBOUND					**SOUTHBOUND**				
6:07	6:21	6:32	6:34	7:00	7:07	7:29	7:32	7:44	8:00
7:07	7:21	7:32	7:34	8:00	8:07	8:29	8:32	8:44	9:00
7:37	7:51	8:02	8:04	8:30	8:37	8:59	9:02	9:14	9:30
8:07	8:21	8:32	8:34	9:00	9:07	9:29	9:32	9:44	10:00
8:37	8:51	9:02	9:04	9:30	9:37	9:59	10:02	10:14	10:30
9:07	9:21	9:32	9:34	10:00	10:07	10:29	10:32	10:44	11:00
9:37	9:51	10:02	10:04	10:30	10:37	10:59	11:02	11:14	11:30
10:07	10:21	10:32	10:34	11:00	11:07	11:29	11:32	11:44	**12:00**
10:37	10:51	11:02	11:04	11:30	11:37	11:59	**12:02**	**12:14**	**12:30**
11:07	11:21	11:32	11:34	**12:00**	**12:07**	**12:29**	**12:32**	**12:44**	**1:00**
11:37	11:51	**12:02**	**12:04**	**12:30**	**12:37**	**12:59**	**1:02**	**1:14**	**1:30**
12:07	**12:21**	**12:32**	**12:34**	**1:00**	**1:07**	**1:29**	**1:32**	**1:44**	**2:00**
12:37	**12:51**	**1:02**	**1:04**	**1:30**	**1:37**	**1:59**	**2:02**	**2:14**	**2:30**
1:07	**1:21**	**1:32**	**1:34**	**2:00**	**2:07**	**2:29**	**2:32**	**2:44**	**3:00**
1:37	**1:51**	**2:02**	**2:04**	**2:30**	**2:37**	**2:59**	**3:02**	**3:14**	**3:30**
2:07	**2:21**	**2:32**	**2:34**	**3:00**	**3:07**	**3:29**	**3:32**	**3:44**	**4:00**
2:37	**2:51**	**3:02**	**3:04**	**3:30**	**3:37**	**3:59**	**4:02**	**4:14**	**4:30**
3:07	**3:21**	**3:32**	**3:34**	**4:00**	**4:07**	**4:29**	**4:32**	**4:44**	**5:00**
3:37	**3:51**	**4:02**	**4:04**	**4:30**	**4:37**	**4:59**	**5:02**	**5:14**	**5:30**
4:07	**4:21**	**4:32**	**4:34**	**5:00**	**5:07**	**5:29**	**5:32**	**5:44**	**6:00**
4:37	**4:51**	**5:02**	**5:04**	**5:30**	**5:37**	**5:59**	**6:02**	**6:14**	**6:30**
5:07	**5:21**	**5:32**	**5:34**	**6:00**	**6:07**	**6:25**			
7:37	**5:49**		**6:00**						
6:07	**6:21**	**6:32**	**6:34**	**7:00**	**7:07**	**7:25**			
6:37	**6:49**	**7:00**	**7:02**	**7:25**					

OMNITRANS ROUTE 2: CAL STATE – E STREET – LOMA LINDA

2 CAL STATE - E STREET - LOMA LINDA

Bus Route
Tripper Service
Timepoint—Look for the matching symbol in the timetable section.
Metrolink Station
Point of interest
Medical Center
Transfer Point
Connecting Route(s)

FREQUENCY

WKDY	SAT	SUN
15/30	20	20/30

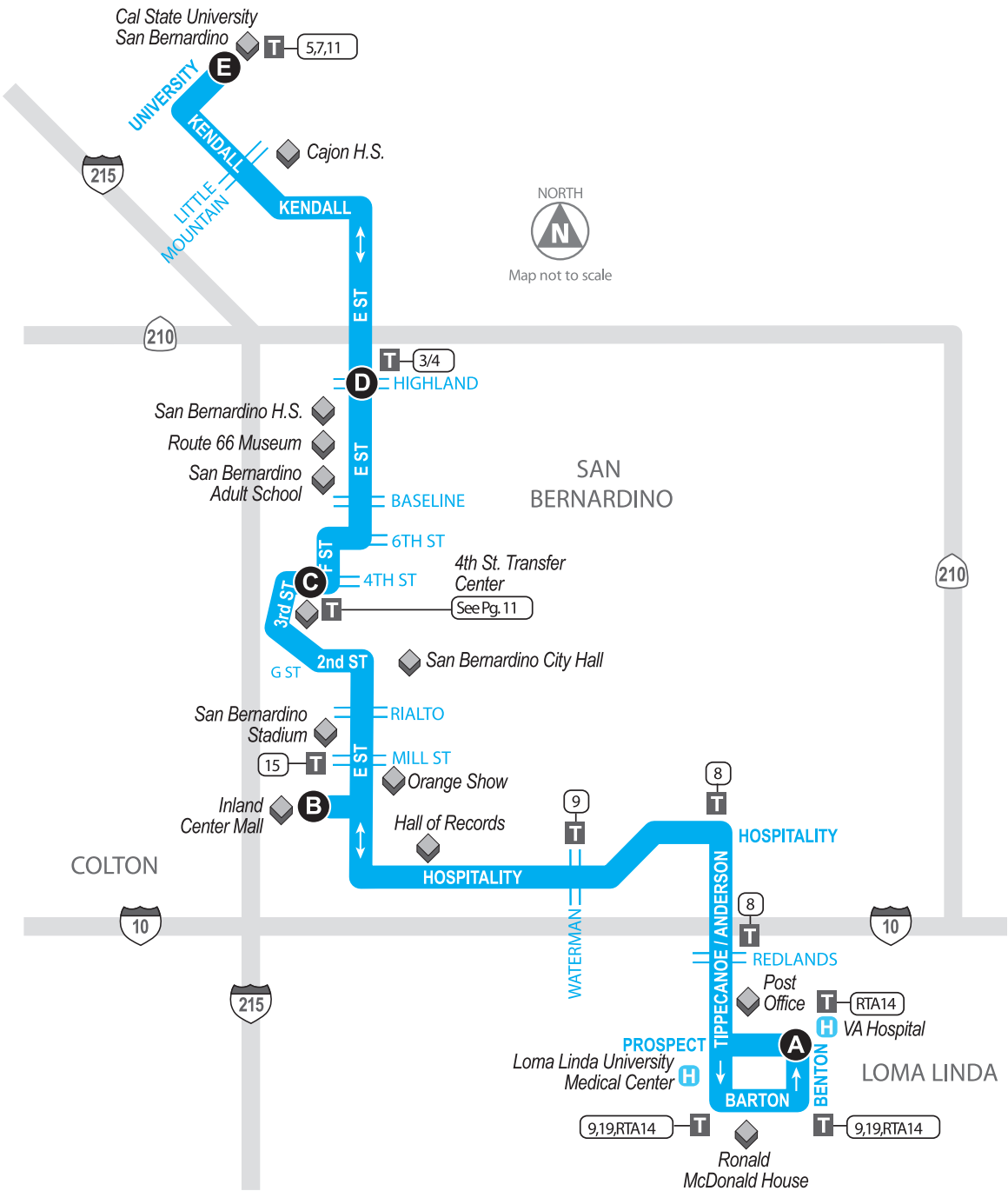

ROUTE 2: MONDAY – FRIDAY

SOUTHBOUND					NORTHBOUND				
E Cal State University	D E St. & Highland	C 4th & G	B Inland Center Mall	A Benton & Prospect	A Benton & Prospect	B Inland Center Mall	C 4th & G	D E St. & Highland	E Cal State University
4:30	4:40	4:48	4:56	5:11	5:30	5:51	5:58	6:08	6:20
5:00	5:13	5:22	5:30	5:50	6:00	6:21	6:28	6:38	6:50
					6:23	6:44	6:51	7:01	7:13
					6:50	7:13	7:27	7:37	7:51
					7:05	7:28	7:42	7:52	8:06
6:00	6:15	6:28	6:40	7:02	7:20	7:43	7:57	8:07	8:21
6:20	6:35	6:48	7:00	7:22	7:35	8:03	8:17	8:27	8:41
6:35	6:50	7:03	7:15	7:40	7:50	8:13	8:27	8:37	8:51
6:51	7:06	7:19	7:31	7:56	8:05	8:33	8:47	8:57	9:11
6:50	7:05	7:18	7:30	7:55	8:20	8:48	9:02	9:12	9:26
7:20	7:35	7:48	8:00	8:25	8:35	9:03	9:17	9:27	9:41
7:35	7:50	8:03	8:15	8:40	8:50	9:18	9:32	9:42	9:56
7:50	8:05	8:18	8:30	8:52	9:05	9:33	9:47	9:57	10:11
8:05	8:20	8:33	8:45	9:10	9:20	9:48	10:02	10:12	10:26
8:20	8:35	8:48	9:00	9:25	9:35	10:03	10:17	10:27	10:41
8:35	8:50	9:03	9:15	9:40	9:50	10:18	10:32	10:42	10:56
8:50	9:05	9:18	9:30	9:55	10:05	10:33	10:47	10:57	11:11
9:05	9:20	9:33	9:45	10:10	10:20	10:48	11:02	11:12	11:26
9:20	9:35	9:48	10:00	10:25	10:35	11:03	11:17	11:27	11:41
9:35	9:50	10:03	10:15	10:40	10:50	11:18	11:32	11:42	11:56
9:50	10:05	10:18	10:30	10:55	11:05	11:33	11:47	11:57	12:11
10:05	10:20	10:33	10:45	11:10	11:20	11:48	12:02	12:12	12:26
10:20	10:35	10:48	11:00	11:25	11:35	12:03	12:17	12:27	12:41
10:35	10:50	11:03	11:15	11:40	11:50	12:18	12:32	12:42	12:56
10:50	11:05	11:18	11:30	11:55	12:05	12:33	12:47	12:57	1:11
11:05	11:20	11:33	11:45	12:10	12:20	12:48	1:02	1:12	1:26
					12:30	1:06	1:20	1:30	1:46
11:20	11:35	11:48	12:00	12:25	12:35	1:11	1:25	1:35	1:51
11:35	11:50	12:03	12:15	12:40	12:50	1:26	1:40	1:50	2:06
11:50	12:05	12:18	12:31	12:58	1:05	1:41	1:55	2:05	2:21
12:05	12:20	12:33	12:46	1:13	1:20	1:56	2:10	2:20	2:36
12:20	12:35	12:48	1:01	1:28	1:35	2:11	2:25	2:35	2:51
12:35	12:52	1:05	1:18	1:50	2:05	2:41	2:55	3:05	3:21
12:50	1:07	1:20	1:33	2:05	2:20	2:56	3:10	3:20	3:36
1:05	1:22	1:35	1:48	2:20	2:35	3:11	3:25	3:35	3:51
1:20	1:37	1:50	2:03	2:35	2:50	3:26	3:40	3:50	4:06
1:35	1:52	2:05	2:18	2:50	3:05	3:41	3:55	4:05	4:21
1:50	2:07	2:20	2:33	3:05	3:20	3:56	4:10	4:20	4:36
2:05	2:22	2:35	2:48	3:20	3:35	4:11	4:25	4:35	4:51
2:20	2:37	2:50	3:03	3:35	3:50	4:26	4:40	4:50	5:06
2:35	2:52	3:05	3:18	3:50	4:05	4:41	4:55	5:05	5:21
2:50	3:07	3:20	3:33	4:05	4:20	4:56	5:10	5:20	5:36
3:05	3:22	3:35	3:48	4:20	4:35	5:08	5:22	5:32	5:48
3:25	3:42	3:55	4:08	4:40	5:05	5:38	5:52	6:02	6:18
3:45	4:02	4:15	4:28	5:00					
4:05	4:22	4:35	4:48	5:20	5:35	6:08	6:22	6:32	6:48
4:20	4:37	4:50	5:02	5:32					
4:35	4:52	5:05	5:17	5:47	6:05	6:30	6:37	6:47	7:01
4:50	5:07	5:20	5:32	6:02	6:20	6:45	6:52	7:02	7:16
5:05	5:22	5:35	5:47	6:17	6:35	7:00	7:07	7:17	7:31
5:20	5:37	5:50	6:02	6:32					
5:35	5:52	6:05	6:17	6:47	7:05	7:30	7:37	7:47	8:01
6:05	6:22	6:35	6:47	7:17	7:35	7:56	8:03	8:13	8:25
6:35	6:52	7:05	7:17	7:47					
7:05	7:18	7:29	7:37	8:00	8:05	8:26	8:33	8:43	8:55
7:35	7:48	7:59	8:07	8:30	8:35	8:56	9:03	9:13	9:25
7:50	8:03	8:14	8:22	8:45	9:05	9:26	9:33	9:43	9:55
8:20	8:33	8:44	8:52	9:15	9:35	9:56	10:03	10:13	10:25
9:35	9:48	9:59	10:07	10:30					
10:35	10:47	10:55							

ROUTE 2: SATURDAY

SOUTHBOUND					NORTHBOUND				
E Cal State University	D E St. & Highland	C 4th & G	B Inland Center Mall	A Benton & Prospect	A Benton & Prospect	B Inland Center Mall	C 4th & G	D E St. & Highland	E Cal State University
							7:00	7:12	7:26
					7:10	7:40	7:50	7:59	8:13
6:30	6:43	6:54	7:02	7:25	7:30	8:00	8:10	8:19	8:33
6:50	7:03	7:14	7:22	7:45	7:50	8:20	8:30	8:39	8:53
7:10	7:23	7:34	7:44	8:11	8:15	8:45	8:55	9:04	9:18
					8:30	9:02	9:16	9:26	9:40
7:30	7:43	7:54	8:04	8:31	8:50	9:22	9:36	9:46	10:00
7:50	8:03	8:14	8:24	8:51	9:10	9:42	9:56	10:06	10:20
8:10	8:23	8:34	8:44	9:11	9:30	10:02	10:16	10:26	10:40
8:30	8:45	8:58	9:11	9:38	9:50	10:22	10:36	10:46	11:00
8:50	9:05	9:18	9:31	9:58	10:10	10:42	10:56	11:06	11:20
9:10	9:25	9:38	9:51	10:18	10:30	11:02	11:16	11:26	11:40
9:30	9:45	9:58	10:11	10:38	10:50	11:22	11:36	11:46	**12:00**
9:50	10:05	10:18	10:31	10:58	11:10	11:42	11:56	**12:06**	**12:20**
10:10	10:25	10:38	10:51	11:18	11:30	**12:02**	**12:16**	**12:26**	**12:40**
10:30	10:45	10:58	11:11	11:38	11:50	**12:22**	**12:36**	**12:46**	**1:00**
10:50	11:05	11:18	11:31	11:58	**12:10**	**12:42**	**12:56**	**1:06**	**1:20**
11:10	11:25	11:38	11:51	**12:18**	**12:30**	**1:02**	**1:16**	**1:26**	**1:40**
11:30	11:45	11:58	**12:11**	**12:38**	**12:50**	**1:22**	**1:36**	**1:46**	**2:00**
11:50	**12:05**	**12:18**	**12:31**	**12:58**	**1:10**	**1:42**	**1:56**	**2:06**	**2:20**
12:10	**12:25**	**12:38**	**12:51**	**1:18**	**1:30**	**2:02**	**2:16**	**2:26**	**2:40**
12:30	**12:45**	**12:58**	**1:11**	**1:38**	**1:50**	**2:22**	**2:36**	**2:46**	**3:00**
12:50	**1:05**	**1:18**	**1:31**	**1:58**	**2:10**	**2:42**	**2:56**	**3:06**	**3:20**
1:10	**1:25**	**1:38**	**1:51**	**2:18**	**2:30**	**3:02**	**3:16**	**3:26**	**3:40**
1:30	**1:45**	**1:58**	**2:11**	**2:38**	**2:50**	**3:22**	**3:36**	**3:46**	**4:00**
1:50	**2:05**	**2:18**	**2:31**	**2:58**	**3:10**	**3:42**	**3:56**	**4:06**	**4:20**
2:10	**2:25**	**2:38**	**2:51**	**3:18**	**3:30**	**4:02**	**4:16**	**4:26**	**4:40**
2:30	**2:45**	**2:58**	**3:11**	**3:38**	**3:50**	**4:22**	**4:36**	**4:46**	**5:00**
2:50	**3:05**	**3:18**	**3:31**	**3:58**	**4:10**	**4:42**	**4:56**	**5:06**	**5:20**
3:10	**3:25**	**3:38**	**3:51**	**4:18**	**4:30**	**5:02**	**5:16**	**5:26**	**5:40**
3:30	**3:45**	**3:58**	**4:11**	**4:38**	**4:50**	**5:22**	**5:36**	**5:46**	**6:00**
3:50	**4:05**	**4:18**	**4:31**	**4:58**	**5:10**	**5:42**	**5:56**	**6:06**	**6:20**
4:10	**4:25**	**4:38**	**4:51**	**5:18**	**5:30**	**6:02**	**6:16**	**6:26**	**6:40**
4:30	**4:45**	**4:58**	**5:11**	**5:38**	**5:50**	**6:14**	**6:27**	**6:37**	**6:51**
4:50	**5:05**	**5:18**	**5:31**	**5:58**	**6:10**	**6:34**	**6:47**	**6:57**	**7:11**
5:10	**5:25**	**5:38**	**5:51**	**6:18**	**6:30**	**6:54**	**7:07**	**7:17**	**7:31**
5:30	**5:45**	**5:58**	**6:11**	**6:38**	**6:53**	**7:17**	**7:27**		
5:50	**6:03**	**6:14**	**6:24**	**6:46**					
6:10	**6:23**	**6:34**	**6:44**	**7:06**	**7:10**	**7:34**	**7:44**		
6:50	**7:03**	**7:14**	**7:24**	**7:46**					

Be seen, not part of the scenery! Sometimes it's hard to tell if you're waiting for the bus, or just hanging out! Help our drivers out by standing AT the bus stop sign.

ROUTE 2: SUNDAY

SOUTHBOUND					NORTHBOUND				
E Cal State University	D E St. & Highland	C 4th & G	B Inland Center Mall	A Benton & Prospect	A Benton & Prospect	B Inland Center Mall	C 4th & G	D E St. & Highland	E Cal State University
					6:30	6:49	6:58	7:07	7:23
6:30	6:41	6:52	7:00	7:23	7:30	7:49	7:58	8:07	8:23
					8:00	8:19	8:28	8:37	8:53
7:30	7:41	7:52	8:00	8:23	8:30	9:02	9:16	9:26	9:40
					8:50	9:22	9:36	9:46	10:00
					9:10	9:42	9:56	10:06	10:20
					9:30	10:02	10:16	10:26	10:40
8:30	8:45	8:58	9:11	9:38	9:50	10:22	10:36	10:46	11:00
8:50	9:05	9:18	9:31	9:58	10:10	10:42	10:56	11:06	11:20
9:10	9:25	9:38	9:51	10:18	10:30	11:02	11:16	11:26	11:40
9:30	9:45	9:58	10:11	10:38	10:50	11:22	11:36	11:46	**12:00**
9:50	10:05	10:18	10:31	10:58	11:10	11:42	11:56	**12:06**	**12:20**
10:10	10:25	10:38	10:51	11:18	11:30	**12:02**	**12:16**	**12:26**	**12:40**
10:30	10:45	10:58	11:11	11:38	11:50	**12:22**	**12:36**	**12:46**	**1:00**
10:50	11:05	11:18	11:31	11:58	**12:10**	**12:42**	**12:56**	**1:06**	**1:20**
11:10	11:25	11:38	11:51	**12:18**	**12:30**	**1:02**	**1:16**	**1:26**	**1:40**
11:30	11:45	11:58	**12:11**	**12:38**	**12:50**	**1:22**	**1:36**	**1:46**	**2:00**
11:50	**12:05**	**12:18**	**12:31**	**12:58**	**1:10**	**1:42**	**1:56**	**2:06**	**2:20**
12:10	**12:25**	**12:38**	**12:51**	**1:18**	**1:30**	**2:02**	**2:16**	**2:26**	**2:40**
12:30	**12:45**	**12:58**	**1:11**	**1:38**	**1:50**	**2:22**	**2:36**	**2:46**	**3:00**
12:50	**1:05**	**1:18**	**1:31**	**1:58**	**2:10**	**2:42**	**2:56**	**3:06**	**3:20**
1:10	**1:25**	**1:38**	**1:51**	**2:18**	**2:30**	**3:02**	**3:16**	**3:26**	**3:40**
1:30	**1:45**	**1:58**	**2:11**	**2:38**	**2:50**	**3:22**	**3:36**	**3:46**	**4:00**
1:50	**2:05**	**2:18**	**2:31**	**2:58**	**3:10**	**3:42**	**3:56**	**4:06**	**4:20**
2:10	**2:25**	**2:38**	**2:51**	**3:18**	**3:30**	**4:02**	**4:16**	**4:26**	**4:40**
2:30	**2:45**	**2:58**	**3:11**	**3:38**	**3:50**	**4:22**	**4:36**	**4:46**	**5:00**
2:50	**3:05**	**3:18**	**3:31**	**3:58**	**4:10**	**4:42**	**4:56**	**5:06**	**5:20**
3:10	**3:25**	**3:38**	**3:51**	**4:18**	**4:30**	**5:02**	**5:16**	**5:26**	**5:40**
3:30	**3:45**	**3:58**	**4:11**	**4:38**	**4:50**	**5:22**	**5:36**	**5:46**	**6:00**
3:50	**4:05**	**4:18**	**4:31**	**4:58**	**5:10**	**5:42**	**5:56**	**6:06**	**6:20**
4:10	**4:25**	**4:38**	**4:51**	**5:18**	**5:30**	**6:02**	**6:16**	**6:26**	**6:40**
4:30	**4:45**	**4:58**	**5:11**	**5:38**					
4:50	**5:05**	**5:18**	**5:31**	**5:58**					
5:10	**5:25**	**5:38**	**5:51**	**6:18**	**6:30**	**7:02**	**7:16**	**7:26**	**7:40**
5:30	**5:45**	**5:58**	**6:11**	**6:38**	**7:00**	**7:19**	**7:25**		
6:10	**6:25**	**6:38**	**6:51**	**7:08**					
6:30	**6:43**	**6:51**							

Don't be a Jay Bird! Crossing the street against traffic is unsafe. Chasing after the bus is, too. If you miss your bus, please be patient. Another will be along before you know it!

OMNITRANS ROUTE 3/4: BASELINE – HIGHLAND – SAN BERNARDINO

3/4 BASELINE - HIGHLAND - SAN BERNARDINO

Bus Route
Tripper Service
Timepoint—Look for the matching symbol in the timetable section.
METROLINK Metrolink Station
Point of interest
Medical Center
Transfer Point
1,2 Connecting Route(s)

FREQUENCY

WKDY	SAT	SUN
15/20	20	20

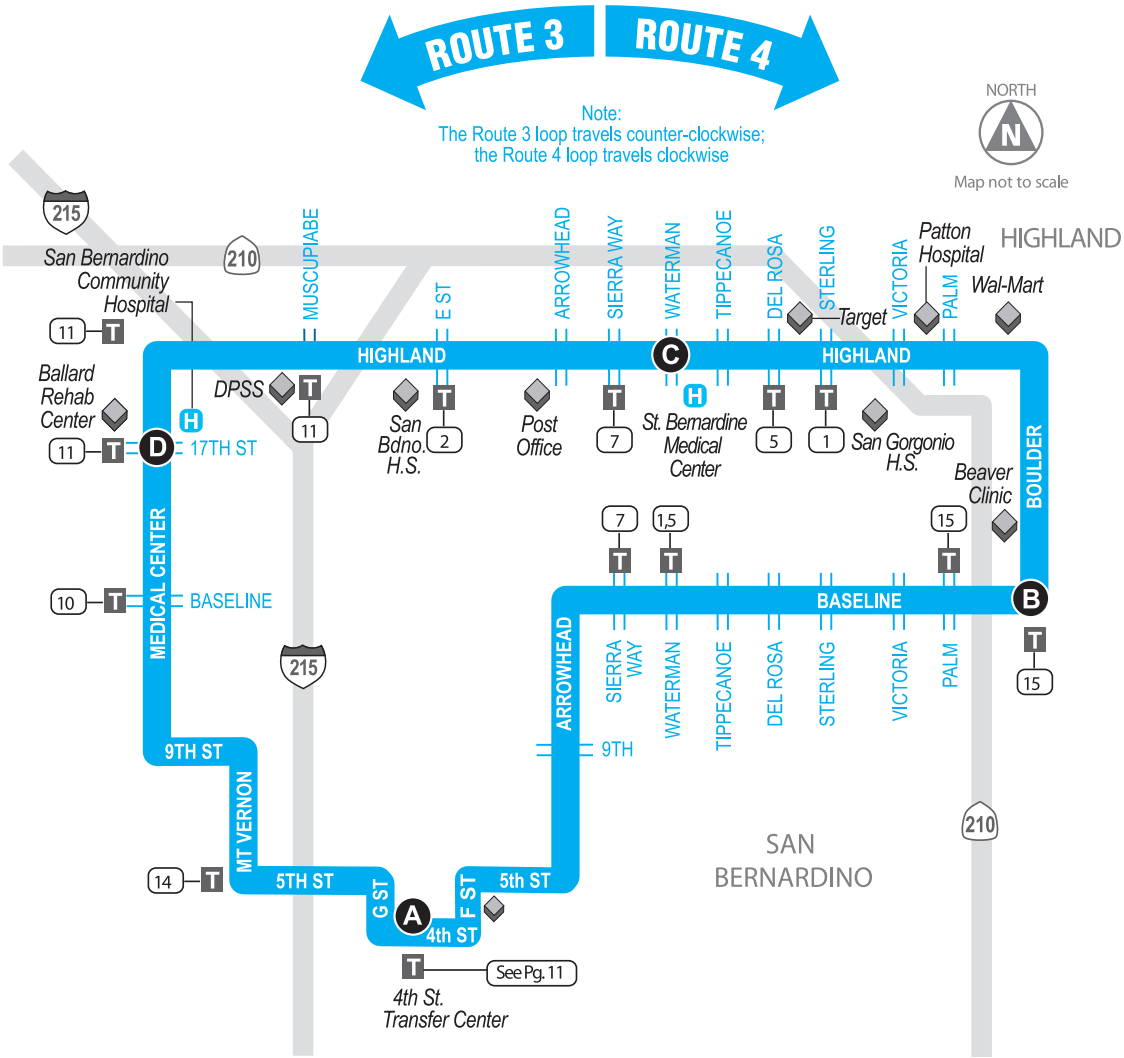

ROUTE 3/4: MONDAY – FRIDAY

A 4th & F	B Boulder at Baseline	C Highland at Waterman	D 17th & Medical Center	A 4th & F	A 4th & F	D 17th & Medical Center	C Highland & Waterman	B Boulder & Baseline	A 4th & F
3: COUNTERCLOCKWISE					**4: CLOCKWISE**				
	4:36	4:54	5:04	5:16				4:32	5:00
	5:39	5:59	6:11	6:25				5:22	5:50
	6:01	6:21	6:36	6:50	5:05	5:21	5:35	5:56	6:24
5:49	6:12	6:32	6:47	7:01				6:32	7:00
6:18	6:36	6:56	7:11	7:30	6:05	6:21	6:35	6:56	7:24
6:29	6:47	7:07	7:22	7:41				7:37	8:05
6:49	7:16	7:36	7:51	8:10	7:06	7:22	7:36	7:57	8:25
7:09	7:36	7:56	8:11	8:30	7:26	7:42	7:56	8:17	8:45
7:29	7:56	8:16	8:31	8:50	7:46	8:02	8:16	8:37	9:05
7:49	8:16	8:36	8:51	9:10	8:06	8:22	8:36	8:57	9:25
8:09	8:36	8:56	9:11	9:30	8:26	8:42	8:56	9:17	9:45
8:29	8:56	9:16	9:31	9:50	8:46	9:02	9:16	9:37	10:05
8:49	9:16	9:36	9:51	10:10	9:06	9:22	9:36	9:57	10:25
9:09	9:36	9:56	10:11	10:30	9:26	9:42	9:56	10:17	10:45
9:29	9:56	10:16	10:31	10:50	9:46	10:02	10:16	10:37	11:05
9:49	10:16	10:36	10:51	11:10	10:06	10:22	10:36	10:57	11:25
10:09	10:36	10:56	11:11	11:30	10:26	10:42	10:56	11:17	11:45
10:29	10:56	11:16	11:31	11:50	10:46	11:02	11:16	11:37	12:05
10:49	11:16	11:36	11:51	12:10	11:06	11:22	11:36	11:57	12:25
11:09	11:36	11:56	12:11	12:30	11:26	11:42	11:56	12:17	12:45
11:29	11:56	12:16	12:31	12:50	11:46	12:02	12:16	12:37	1:05
11:49	12:16	12:36	12:51	1:10	12:06	12:22	12:36	12:57	1:25
12:09	12:36	12:56	1:11	1:30	12:26	12:42	12:56	1:17	1:45
12:29	12:56	1:16	1:31	1:50	12:46	1:02	1:16	1:37	2:05
12:44	1:16	1:36	1:51	2:10	1:01	1:17	1:33	1:57	2:25
1:04	1:36	1:56	2:11	2:30	1:21	1:37	1:53	2:17	2:45
1:24	1:56	2:16	2:31	2:50	1:41	1:57	2:13	2:37	3:05
1:44	2:16	2:36	2:51	3:10	2:01	2:17	2:33	2:57	3:25
2:04	2:36	2:56	3:11	3:30	2:21	2:37	2:53	3:17	3:45
2:24	2:56	3:16	3:31	3:50	2:45	3:01	3:17	3:41	4:09
2:44	3:16	3:36	3:51	4:10	3:00	3:16	3:32	3:56	4:24
2:59	3:31	3:51	4:06	4:25	3:15	3:31	3:47	4:11	4:39
3:14	3:46	4:06	4:21	4:40	3:30	3:46	4:02	4:26	4:54
3:29	4:01	4:21	4:36	4:55	3:40	3:56	4:12	4:36	5:04
3:44	4:16	4:36	4:51	5:10	4:00	4:16	4:32	4:56	5:24
3:59	4:31	4:51	5:06	5:25	4:15	4:31	4:47	5:11	5:39
4:15	4:47	5:07	5:22	5:41	4:30	4:46	5:02	5:26	5:54
4:30	5:02	5:22	5:37	5:56	4:45	5:01	5:17	5:41	6:09
4:45	5:17	5:37	5:52	6:11	5:09	5:25	5:41	6:05	6:33
5:00	5:32	5:52	6:07	6:26	5:15	5:31	5:47	6:11	6:39
5:15	5:47	6:07	6:22	6:41	5:30	5:46	6:02	6:26	6:54
5:30	6:02	6:22	6:37	6:51	5:45	6:01	6:17	6:41	7:09
5:46	6:18	6:38	6:53	7:12	6:05	6:21	6:37	7:01	7:29
6:04	6:36	6:56	7:11	7:30	6:20	6:36	6:52	7:16	7:44
6:24	6:56	7:16	7:31	7:50	6:36	6:52	7:08	7:32	8:00
6:54	7:21	7:41	7:56	8:15	6:51	7:07	7:21	7:42	8:10
7:29	7:56	8:16	8:31	8:50	7:11	7:27	7:41	8:02	8:30
7:54	8:21	8:41	8:56	9:15	7:41	7:57	8:11	8:32	9:00
8:34	9:01	9:21	9:36	9:55	8:36	8:52	9:06	9:27	9:55
9:04	9:31	9:51	10:06	10:20	9:21	9:37	9:51	10:07	10:30
9:34	10:01	10:21	10:36	10:50	10:10	10:26	10:40		
10:13	10:40	10:54	11:03	11:13					

Transit Tip

If you're riding the bus with your bicycle, please let your driver know as you exit the bus that you'll need a minute to retrieve your bike. They'll appreciate the heads up!

ROUTE 3/4: SATURDAY

A 4th & F	B Boulder at Baseline	C Highland at Waterman	D 17th & Medical Center	A 4th & F	A 4th & F	D 17th & Medical Center	C Highland & Waterman	B Boulder & Baseline	A 4th & F
3: COUNTERCLOCKWISE					**4: CLOCKWISE**				
	6:01	6:21	6:36	6:55				6:22	6:50
	7:01	7:21	7:36	7:55				7:02	7:30
	7:21	7:41	7:56	8:15				7:22	7:50
7:19	7:46	8:06	8:21	8:40	7:16	7:32	7:46	8:07	8:35
7:39	8:06	8:26	8:41	9:00	7:36	7:52	8:06	8:27	8:55
7:59	8:26	8:46	9:01	9:20	7:56	8:12	8:26	8:47	9:15
8:19	8:46	9:06	9:21	9:40	8:16	8:32	8:46	9:07	9:35
8:39	9:06	9:26	9:41	10:00	8:36	8:52	9:06	9:27	9:55
8:59	9:26	9:46	10:01	10:20	8:56	9:12	9:26	9:47	10:15
9:19	9:46	10:06	10:21	10:40	9:16	9:32	9:46	10:07	10:35
9:39	10:06	10:26	10:41	11:00	9:36	9:52	10:06	10:27	10:55
9:59	10:26	10:46	11:01	11:20	9:56	10:12	10:26	10:47	11:15
10:19	10:46	11:06	11:21	11:40	10:16	10:32	10:46	11:07	11:35
10:39	11:06	11:26	11:41	**12:00**	10:36	10:52	11:06	11:27	11:55
10:59	11:26	11:46	**12:01**	**12:20**	10:56	11:12	11:26	11:47	**12:15**
11:19	11:46	**12:06**	**12:21**	**12:40**	11:16	11:32	11:46	**12:07**	**12:35**
11:39	**12:06**	**12:26**	**12:41**	**1:00**	11:36	11:52	12:06	**12:27**	**12:55**
11:59	**12:26**	**12:46**	**1:01**	**1:20**	11:56	**12:12**	**12:26**	**12:47**	**1:15**
12:19	**12:46**	**1:06**	**1:21**	**1:40**	**12:16**	**12:32**	**12:46**	**1:07**	**1:35**
12:39	**1:06**	**1:26**	**1:41**	**2:00**	**12:36**	**12:52**	**1:06**	**1:27**	**1:55**
12:59	**1:26**	**1:46**	**2:01**	**2:20**	**12:56**	**1:12**	**1:26**	**1:47**	**2:15**
1:14	**1:46**	**2:06**	**2:21**	**2:40**	**1:11**	**1:27**	**1:43**	**2:07**	**2:35**
1:34	**2:06**	**2:26**	**2:41**	**3:00**	**1:31**	**1:47**	**2:03**	**2:27**	**2:55**
1:54	**2:26**	**2:46**	**3:01**	**3:20**	**1:51**	**2:07**	**2:23**	**2:47**	**3:15**
2:14	**2:46**	**3:06**	**3:21**	**3:40**	**2:11**	**2:27**	**2:43**	**3:07**	**3:35**
2:34	**3:06**	**3:26**	**3:41**	**4:00**	**2:31**	**2:47**	**3:03**	**3:27**	**3:55**
2:54	**3:26**	**3:46**	**4:01**	**4:20**	**2:51**	**3:07**	**3:23**	**3:47**	**4:15**
3:14	**3:46**	**4:06**	**4:21**	**4:40**	**3:11**	**3:27**	**3:43**	**4:07**	**4:35**
3:34	**4:06**	**4:26**	**4:41**	**5:00**	**3:31**	**3:47**	**4:03**	**4:27**	**4:55**
3:54	**4:26**	**4:46**	**5:01**	**5:20**	**3:51**	**4:07**	**4:23**	**4:47**	**5:15**
4:14	**4:46**	**5:06**	**5:21**	**5:40**	**4:11**	**4:27**	**4:43**	**5:07**	**5:35**
4:34	**5:06**	**5:26**	**5:41**	**6:00**	**4:31**	**4:47**	**5:03**	**5:27**	**5:55**
4:54	**5:26**	**5:46**	**6:01**	**6:20**	**4:51**	**5:07**	**5:23**	**5:47**	**6:15**
5:14	**5:46**	**6:06**	**6:21**	**6:40**	**5:13**	**5:29**	**5:45**	**6:09**	**6:37**
5:34	**6:06**	**6:26**	**6:39**	**6:55**	**5:31**	**5:47**	**6:03**	**6:27**	**6:55**
5:54	**6:26**	**6:46**	**6:59**	**7:15**	**5:50**	**6:06**	**6:22**	**6:46**	**7:14**
6:19	**6:46**				**6:13**	**6:29**	**6:41**	**7:02**	
6:39	**7:06**				**6:33**	**6:49**	**7:01**	**7:22**	
					6:53	**7:09**	**7:21**	**7:42**	

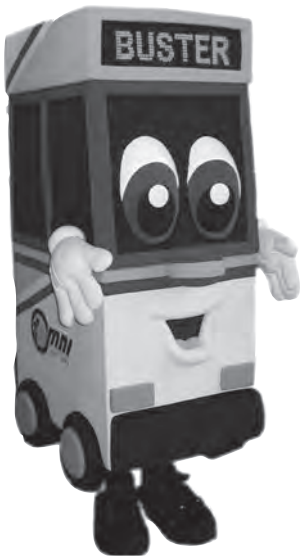

Fair Fare

Paying just part of your bus fare isn't being "just a little short" - it's NOT PAYING YOUR FARE! Passenger fares make up 20% of our operating costs, imagine if everyone came up "short"! Please, don't make us refuse your service, pay for your ride. It's only fair.

ROUTE 3/4: SUNDAY

A 4th & F	B Boulder at Baseline	C Highland at Waterman	D 17th & Medical Center	A 4th & F	A 4th & F	D 17th & Medical Center	C Highland & Waterman	B Boulder & Baseline	A 4th & F
3: COUNTERCLOCKWISE					**4: CLOCKWISE**				
	6:01	6:21	6:36	6:55				6:22	6:50
	7:01	7:21	7:36	7:55				6:52	7:20
	7:21	7:41	7:56	8:15				7:22	7:50
7:19	7:46	8:06	8:21	8:40				7:42	8:10
7:39	8:06	8:26	8:41	9:00	7:11	7:27	7:41	8:02	8:30
7:59	8:26	8:46	9:01	9:20				8:22	8:50
8:19	8:46	9:06	9:21	9:40	7:56	8:12	8:26	8:47	9:15
8:39	9:06	9:26	9:41	10:00	8:16	8:32	8:46	9:07	9:35
8:59	9:26	9:46	10:01	10:20	8:36	8:52	9:06	9:27	9:55
9:19	9:46	10:06	10:21	10:40	8:56	9:12	9:26	9:47	10:15
9:39	10:06	10:26	10:41	11:00	9:16	9:32	9:46	10:07	10:35
9:59	10:26	10:46	11:01	11:20	9:36	9:52	10:06	10:27	10:55
10:19	10:46	11:06	11:21	11:40	9:56	10:12	10:26	10:47	11:15
10:39	11:06	11:26	11:41	**12:00**	10:16	10:32	10:46	11:07	11:35
10:59	11:26	11:46	**12:01**	**12:20**	10:36	10:52	11:06	11:27	11:55
11:19	11:46	**12:06**	**12:21**	**12:40**	10:56	11:12	11:26	11:47	**12:15**
11:39	**12:06**	**12:26**	**12:41**	**1:00**	11:16	11:32	11:46	**12:07**	**12:35**
11:59	**12:26**	**12:46**	**1:01**	**1:20**	11:36	11:52	**12:06**	**12:27**	**12:55**
12:19	**12:46**	**1:06**	**1:21**	**1:40**	11:56	**12:12**	**12:26**	**12:47**	**1:15**
12:39	**1:06**	**1:26**	**1:41**	**2:00**	**12:16**	**12:32**	**12:46**	**1:07**	**1:35**
12:59	**1:26**	**1:46**	**2:01**	**2:20**	**12:36**	**12:52**	**1:06**	**1:27**	**1:55**
1:14	**1:46**	**2:06**	**2:21**	**2:40**	**12:56**	**1:12**	**1:26**	**1:47**	**2:15**
1:34	**2:06**	**2:26**	**2:41**	**3:00**	**1:11**	**1:27**	**1:43**	**2:07**	**2:35**
1:54	**2:26**	**2:46**	**3:01**	**3:20**	**1:31**	**1:47**	**2:03**	**2:27**	**2:55**
2:14	**2:46**	**3:06**	**3:21**	**3:40**	**1:51**	**2:07**	**2:23**	**2:47**	**3:15**
2:34	**3:06**	**3:26**	**3:41**	**4:00**	**2:11**	**2:27**	**2:43**	**3:07**	**3:35**
2:54	**3:26**	**3:46**	**4:01**	**4:20**	**2:31**	**2:47**	**3:03**	**3:27**	**3:55**
3:14	**3:46**	**4:06**	**4:21**	**4:40**	**2:51**	**3:07**	**3:23**	**3:47**	**4:15**
3:34	**4:06**	**4:26**	**4:41**	**5:00**	**3:11**	**3:27**	**3:43**	**4:07**	**4:35**
3:54	**4:26**	**4:46**	**5:01**	**5:20**	**3:31**	**3:47**	**4:03**	**4:27**	**4:55**
4:14	**4:46**	**5:06**	**5:21**	**5:40**	**3:51**	**4:07**	**4:23**	**4:47**	**5:15**
4:34	**5:06**	**5:26**	**5:41**	**6:00**	**4:11**	**4:27**	**4:43**	**5:07**	**5:35**
4:54	**5:26**	**5:46**	**6:01**	**6:20**	**4:31**	**4:47**	**5:03**	**5:27**	**5:50**
5:14	**5:46**	**6:06**	**6:21**	**6:40**	**4:51**	**5:07**	**5:23**	**5:47**	**6:10**
5:34	**6:06**				**5:08**	**5:24**	**5:40**	**6:04**	**6:27**
5:54	**6:26**	**6:46**	**6:59**	**7:15**	**5:33**	**5:49**	**6:03**	**6:24**	
6:19	**6:46**				**5:53**	**6:09**	**6:23**	**6:44**	**7:07**
6:39	**7:06**				**6:33**	**6:49**	**7:03**	**7:24**	

Transit Tip

While we make every effort to keep our bus routes running on time, sometimes Mother Nature creates a challenge. On rainy days, buses may run late due to reduced visibility, local street flooding and slow traffic.

OMNITRANS ROUTE 5: SAN BERNARDINO – DEL ROSA – CAL STATE

5 SAN BERNARDINO - DEL ROSA - CAL STATE

Bus Route
Tripper Service
A Timepoint—Look for the matching symbol in the timetable section.
METROLINK Metrolink Station
Point of interest
H Medical Center
T Transfer Point
1,2 Connecting Route(s)

FREQUENCY

WKDY	SAT	SUN
30/35	60	60

ROUTE 5: MONDAY – FRIDAY

A 4th & G	B Pacific High School	C 40th & Sierra Way	D Cal State University	D Cal State University	C 40th & Sierra Way	B Pacific High School	A 4th & G
NORTHBOUND				SOUTHBOUND			
				4:51	5:04	5:21	5:39
				5:23	5:36	5:53	6:11
				5:56	6:09	6:26	6:44
				6:23	6:36	6:54	7:12
5:45	6:06	6:23	6:34	6:50	7:03	7:21	7:39
6:15	6:36	6:53	7:04	7:25	7:38	7:56	8:14
6:50	7:11	7:28	7:39	8:00	8:13	8:31	8:49
7:25	7:46	8:06	8:18	8:35	8:48	9:08	9:32
8:00	8:21	8:41	8:53	9:10	9:23	9:43	10:07
8:35	8:56	9:16	9:28	9:45	9:58	10:18	10:42
9:10	9:31	9:51	10:03	10:20	10:33	10:53	11:17
9:45	10:06	10:26	10:38	10:55	11:08	11:28	11:52
10:20	10:41	11:01	11:13	11:30	11:43	**12:03**	**12:27**
10:55	11:16	11:36	11:48	**12:05**	**12:20**	**12:41**	**1:06**
11:30	11:51	**12:11**	**12:23**	**12:40**	**12:55**	**1:16**	**1:41**
12:05	**12:29**	**12:51**	**1:03**	**1:15**	**1:30**	**1:51**	**2:16**
12:40	**1:04**	**1:26**	**1:38**	**1:50**	**2:05**	**2:26**	**2:51**
1:15	**1:39**	**2:01**	**2:13**	**2:25**	**2:40**	**3:01**	**3:26**
1:50	**2:14**	**2:36**	**2:48**	**3:00**	**3:15**	**3:36**	**4:01**
2:25	**2:49**	**3:11**	**3:23**	**3:35**	**3:50**	**4:11**	**4:36**
3:00	**3:24**	**3:46**	**3:58**	**4:10**	**4:25**	**4:45**	**5:07**
3:35	**3:59**	**4:21**	**4:33**	**4:45**	**5:00**	**5:20**	**5:42**
4:10	**4:32**	**4:54**	**5:07**	**5:20**	**5:35**	**5:55**	**6:17**
4:45	**5:07**	**5:29**	**5:42**	**5:55**	**6:08**	**6:25**	**6:45**
5:20	**5:42**	**6:04**	**6:17**	**6:23**	**6:36**	**6:53**	**7:13**
5:55	**6:17**	**6:39**	**6:52**	**6:57**	**7:10**	**7:27**	**7:47**
6:30	**6:52**	**7:14**	**7:27**	**7:30**	**7:43**	**8:00**	**8:20**
6:55	**7:14**	**7:33**	**7:46**	**7:53**	**8:06**	**8:23**	**8:43**
7:20	**7:39**	**7:58**	**8:11**	**8:23**	**8:36**	**8:53**	**9:13**
7:55	**8:14**	**8:33**	**8:46**	**8:53**	**9:06**	**9:23**	**9:43**
8:25	**8:44**	**9:03**	**9:16**	**9:23**	**9:36**	**9:53**	**10:13**
8:50	**9:09**	**9:28**	**9:41**				
9:33	**9:52**	**10:11**	**10:24**				

ROUTE 5: SATURDAY

A	B	C	D	D	C	B	A
NORTHBOUND				SOUTHBOUND			
				6:48	7:02	7:20	7:43
				7:48	8:02	8:20	8:43
7:50	8:10	8:31	8:44	8:48	9:02	9:20	9:43
8:50	9:10	9:31	9:44	9:48	10:02	10:20	10:43
9:50	10:10	10:31	10:44	10:48	11:02	11:20	11:43
10:50	11:10	11:31	11:44	11:48	**12:02**	**12:20**	**12:43**
11:50	**12:10**	**12:31**	**12:44**	**12:48**	**1:02**	**1:20**	**1:43**
12:50	**1:10**	**1:31**	**1:44**	**1:48**	**2:02**	**2:20**	**2:43**
1:50	**2:10**	**2:31**	**2:44**	**2:48**	**3:02**	**3:20**	**3:43**
2:50	**3:10**	**3:31**	**3:44**	**3:48**	**4:02**	**4:20**	**4:43**
3:50	**4:10**	**4:31**	**4:44**	**4:48**	**5:02**	**5:20**	**5:43**
4:50	**5:10**	**5:31**	**5:44**	**5:54**	**6:05**	**6:20**	**6:38**
5:50	**6:10**	**6:31**	**6:44**				

ROUTE 5: SUNDAY

A	B	C	D	D	C	B	A
NORTHBOUND				SOUTHBOUND			
				6:33	6:47	7:05	7:28
				7:33	7:47	8:05	8:28
7:35	7:55	8:16	8:29	8:33	8:47	9:05	9:28
8:35	8:55	9:16	9:29	9:33	9:47	10:05	10:28
9:35	9:55	10:16	10:29	10:33	10:47	11:05	11:28
10:35	10:55	11:16	11:29	11:33	11:47	**12:05**	**12:28**
11:35	11:55	**12:16**	**12:29**	**12:33**	**12:47**	**1:05**	**1:28**
12:35	**12:55**	**1:16**	**1:29**	**1:33**	**1:47**	**2:05**	**2:28**
1:35	**1:55**	**2:16**	**2:29**	**2:33**	**2:47**	**3:05**	**3:28**
2:35	**2:55**	**3:16**	**3:29**	**3:33**	**3:47**	**4:05**	**4:28**
3:35	**3:55**	**4:16**	**4:29**	**4:33**	**4:47**	**5:05**	**5:28**
4:35	**4:55**	**5:16**	**5:29**	**5:33**	**5:47**	**6:05**	**6:28**
5:35	**5:55**	**6:16**	**6:29**				
6:40	**7:00**	**7:21**	**7:34**				

OMNITRANS ROUTE 7: N. SAN BERNARDINO – SIERRA WAY – SAN BERNARDINO

7 SAN BERNARDINO – MENTONE – YUCAIPA

Bus Route
Tripper Service
Timepoint—Look for the matching symbol in the timetable section.
Metrolink Station
Point of interest
Medical Center
Transfer Point
Connecting Route(s)

FREQUENCY

WKDY	SAT	SUN
30/60	60	60

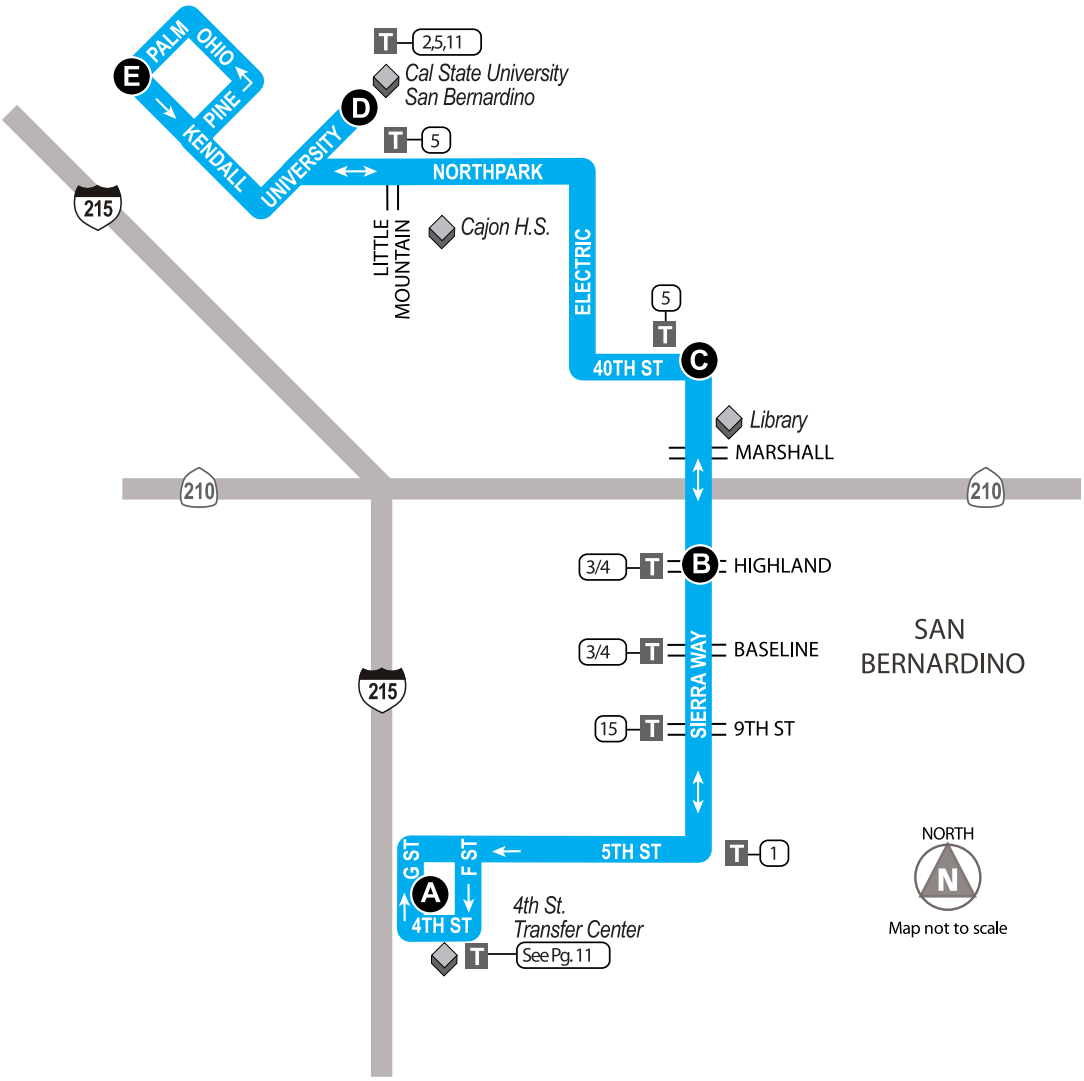

ROUTE 7: MONDAY – FRIDAY

A 4th & G	B Sierra Way & Highland	C Sierra Way & 40th	D Cal State University	E Kendall & Palm	E Kendall & Palm	D Cal State University	C Sierra Way & 40th	B Sierra Way & Highland	A 4th & G
NORTHBOUND					SOUTHBOUND				
					6:13	6:21	6:32	6:42	6:52
					6:40	6:48	6:59	7:09	7:22
6:10	6:20	6:28	6:38	6:51	7:10	7:18	7:29	7:39	7:52
6:35	6:47	6:55	7:08	7:21	7:40	7:48	7:59	8:09	8:22
7:05	7:17	7:25	7:38	7:51	8:10	8:18	8:29	8:39	8:52
7:35	7:47	7:55	8:08	8:21	8:40	8:48	8:59	9:09	9:22
8:05	8:17	8:25	8:38	8:51					
8:35	8:47	8:55	9:08	9:21	9:40	9:48	9:59	10:09	10:22
9:35	9:47	9:55	10:08	10:21	10:40	10:48	10:59	11:09	11:22
10:35	10:47	10:55	11:08	11:21	11:40	11:48	11:59	**12:09**	**12:22**
11:35	11:47	11:55	**12:08**	**12:21**	**12:40**	**12:48**	**12:59**	**1:09**	**1:22**
12:35	**12:47**	**12:55**	**1:08**	**1:21**	**1:40**	**1:48**	**1:59**	**2:09**	**2:22**
					2:10	**2:18**	**2:29**	**2:39**	**2:52**
1:35	**1:47**	**1:55**	**2:08**	**2:21**	**2:40**	**2:48**	**2:59**	**3:09**	**3:22**
2:05	**2:17**	**2:25**	**2:38**	**2:51**	**3:10**	**3:18**	**3:29**	**3:39**	**3:52**
2:35	**2:47**	**2:55**	**3:08**	**3:21**	**3:40**	**3:48**	**3:59**	**4:09**	**4:22**
3:05	**3:17**	**3:25**	**3:38**	**3:51**	**4:10**	**4:18**	**4:29**	**4:39**	**4:52**
3:35	**3:47**	**3:55**	**4:08**	**4:21**	**4:40**	**4:48**	**4:59**	**5:09**	**5:22**
4:05	**4:17**	**4:25**	**4:38**	**4:51**	**5:10**	**5:18**	**5:29**	**5:39**	**5:52**
4:35	**4:47**	**4:55**	**5:08**	**5:21**	**5:40**	**5:48**	**5:59**	**6:09**	**6:22**
5:05	**5:17**	**5:25**	**5:38**	**5:51**	**6:10**	**6:18**	**6:29**	**6:39**	**6:52**
5:35	**5:47**	**5:55**	**6:08**	**6:21**	**6:40**	**6:48**	**6:59**	**7:09**	**7:22**
6:05	**6:17**	**6:25**	**6:38**	**6:51**	**7:10**	**7:18**	**7:29**	**7:39**	**7:52**
6:35	**6:47**	**6:55**	**7:08**	**7:21**					
7:05	**7:17**	**7:25**	**7:38**	**7:50**					

ROUTE 7: SATURDAY

A 4th & G	B Sierra Way & Highland	C Sierra Way & 40th	D Cal State University	E Kendall & Palm	E Kendall & Palm	D Cal State University	C Sierra Way & 40th	B Sierra Way & Highland	A 4th & G
NORTHBOUND					SOUTHBOUND				
					7:16	7:24	7:35	7:45	7:58
					8:16	8:24	8:35	8:45	8:58
8:05	8:17	8:25	8:38	8:51	9:16	9:24	9:35	9:45	9:58
9:05	9:17	9:25	9:38	9:51	10:16	10:24	10:35	10:45	10:58
10:05	10:17	10:25	10:38	10:51	11:16	11:24	11:35	11:45	11:58
11:05	11:17	11:25	11:38	11:51	**12:16**	**12:24**	**12:35**	**12:45**	**12:58**
12:05	**12:17**	**12:25**	**12:38**	**12:51**	**1:16**	**1:24**	**1:35**	**1:45**	**1:58**
1:05	**1:17**	**1:25**	**1:38**	**1:51**	**2:16**	**2:24**	**2:35**	**2:45**	**2:58**
2:05	**2:17**	**2:25**	**2:38**	**2:51**	**3:16**	**3:24**	**3:35**	**3:45**	**3:58**
3:05	**3:17**	**3:25**	**3:38**	**3:51**	**4:16**	**4:24**	**4:35**	**4:45**	**4:58**
4:05	**4:17**	**4:25**	**4:38**	**4:51**	**5:16**	**5:24**	**5:35**	**5:45**	**5:58**
5:05	**5:17**	**5:25**	**5:38**	**5:48**					
6:05	**6:17**	**6:25**	**6:38**	**6:48**					

ROUTE 7: SUNDAY

A 4th & Gt	B Sierra Way & Highland	C Sierra Way & 40th	D Cal State University	E Kendall & Palm	E Kendall & Palm	D Cal State University	C Sierra Way & 40th	B Sierra Way & Highland	A 4th & G
NORTHBOUND					SOUTHBOUND				
					8:16	8:24	8:35	8:45	8:58
8:05	8:17	8:25	8:38	8:51	9:16	9:24	9:35	9:45	9:58
9:05	9:17	9:25	9:38	9:51	10:16	10:24	10:35	10:45	10:58
10:05	10:17	10:25	10:38	10:51	11:16	11:24	11:35	11:45	11:58
11:05	11:17	11:25	11:38	11:51	**12:16**	**12:24**	**12:35**	**12:45**	**12:58**
12:05	**12:17**	**12:25**	**12:38**	**12:51**	**1:16**	**1:24**	**1:35**	**1:45**	**1:58**
1:05	**1:17**	**1:25**	**1:38**	**1:51**	**2:16**	**2:24**	**2:35**	**2:45**	**2:58**
2:05	**2:17**	**2:25**	**2:38**	**2:51**	**3:16**	**3:24**	**3:35**	**3:45**	**3:58**
3:05	**3:17**	**3:25**	**3:38**	**3:51**	**4:16**	**4:24**	**4:35**	**4:45**	**4:58**
4:05	**4:17**	**4:25**	**4:38**	**4:51**	**5:16**	**5:24**	**5:35**	**5:45**	**5:58**
5:05	**5:17**	**5:25**	**5:38**	**5:48**					

OMNITRANS ROUTE 8: SAN BERNARDINO – MENTONE – YUCAIPA

8 SAN BERNARDINO – MENTONE – YUCAIPA

Bus Route
Tripper Service
A Timepoint—Look for the matching symbol in the timetable section.
METROLINK Metrolink Station
Point of interest
H Medical Center
T Transfer Point
1,2 Connecting Route(s)

FREQUENCY

WKDY	SAT	SUN
60	60	120

ROUTE 8: MONDAY – FRIDAY

A 4th & F	B Del Rosa & 3rd St	C Redlands Mall	D Mentone & Wabash	E Crafton Hills	F Yucaipa Transit Center	E Crafton Hills	D Mentone & Wabash	C Redlands Mall	B Del Rosa & 3rd St	A 4th & F
EASTBOUND						**WESTBOUND**				
								4:50	5:20	5:30
						4:51	5:12	5:21	5:55	6:05
						5:48	6:09	6:21	6:55	7:05
5:35	5:44	6:17	6:29	6:39	6:57	7:13	7:23	7:33	7:45	8:17	8:30
6:10	6:19	6:52	7:04	7:14	7:32	8:13	8:23	8:33	8:45	9:17	9:30
7:35	7:44	8:17	8:29	8:39	8:57	9:13	9:23	9:33	9:45	10:17	10:30
8:35	8:44	9:17	9:29	9:39	9:57	10:13	10:23	10:33	10:45	11:17	11:30
9:35	9:44	10:17	10:29	10:39	10:57	11:13	11:23	11:33	11:45	**12:17**	**12:30**
10:35	10:44	11:17	11:29	11:39	11:57	**12:13**	**12:23**	**12:33**	**12:45**	**1:17**	**1:30**
11:35	11:44	**12:17**	**12:29**	**12:39**	**12:57**	**1:13**	**1:23**	**1:33**	**1:45**	**2:17**	**2:30**
12:35	**12:44**	**1:17**	**1:29**	**1:39**	**1:57**	**2:28**	**2:38**	**2:48**	**3:00**	**3:32**	**3:45**
1:35	**1:44**	**2:17**	**2:29**	**2:39**	**2:57**	**3:13**	**3:23**	**3:33**	**3:45**	**4:17**	**4:30**
2:35	**2:44**	**3:17**	**3:29**	**3:39**	**3:57**	**4:13**	**4:23**	**4:33**	**4:45**	**5:17**	**5:30**
3:45	**3:54**	**4:27**	**4:39**	**4:49**	**5:07**	**5:13**	**5:23**	**5:33**	**5:45**	**6:17**	**6:30**
4:35	**4:44**	**5:17**	**5:29**	**5:39**	**5:57**	**6:13**	**6:23**	**6:33**	**6:45**	**7:17**	**7:30**
5:35	**5:44**	**6:17**	**6:29**	**6:39**	**6:57**	**7:23**	**7:33**	**7:43**	**7:55**	**8:27**	**8:40**
7:00	**7:09**	**7:42**	**7:54**	**8:04**	**8:22**						
7:55	**8:04**	**8:37**	**8:49**	**8:59**	**9:17**						

ROUTE 8: SATURDAY

A 4th & F	B Del Rosa & 3rd St	C Redlands Mall	D Mentone & Wabash	E Crafton Hills	F Yucaipa Transit Center	E Crafton Hills	D Mentone & Wabash	C Redlands Mall	B Del Rosa & 3rd St	A 4th & F
EASTBOUND						**WESTBOUND**				
								6:43	7:17	7:30
						7:13	7:23	7:33	7:45	8:30
						8:13	8:23	8:33	8:45	9:17	9:30
7:35	7:44	8:17	8:29	8:39	8:57	9:13	9:23	9:33	9:45	10:17	10:30
8:35	8:44	9:17	9:29	9:39	9:57	10:13	10:23	10:33	10:45	11:17	11:30
9:35	9:44	10:17	10:29	10:39	10:57	11:13	11:23	11:33	11:45	**12:17**	**12:30**
10:35	10:44	11:17	11:29	11:39	11:57	**12:13**	**12:23**	**12:33**	**12:45**	**1:17**	**1:30**
11:35	11:44	**12:17**	**12:29**	**12:39**	**12:57**	**1:13**	**1:23**	**1:33**	**1:45**	**2:17**	**2:30**
12:35	**12:44**	**1:17**	**1:29**	**1:39**	**1:57**	**2:13**	**2:23**	**2:33**	**2:45**	**3:17**	**3:30**
1:35	**1:44**	**2:17**	**2:29**	**2:39**	**2:57**	**3:13**	**3:23**	**3:33**	**3:45**	**4:17**	**4:30**
2:35	**2:44**	**3:17**	**3:29**	**3:39**	**3:57**	**4:13**	**4:23**	**4:33**	**4:45**	**5:17**	**5:30**
3:35	**3:44**	**4:17**	**4:29**	**4:39**	**4:57**	**5:13**	**5:23**	**5:33**	**5:45**	**6:17**	**6:30**
5:00	**5:09**	**5:42**	**5:54**	**6:04**	**6:22**					
6:00	**6:09**	**6:42**	**6:54**	**7:04**	**7:22**					

ROUTE 8: SUNDAY

A 4th & F	B Del Rosa & 3rd St	C Redlands Mall	D Mentone & Wabash	E Crafton Hills	F Yucaipa Transit Center	E Crafton Hills	D Mentone & Wabash	C Redlands Mall	B Del Rosa & 3rd St	A 4th & F
EASTBOUND						**WESTBOUND**				
8:05	8:14	8:47	8:59	9:10	9:28	9:43	9:53	10:03	10:15	10:47	11:00
10:05	10:14	10:47	10:59	11:10	11:28	11:43	11:53	**12:03**	**12:15**	**12:47**	**1:00**
12:05	**12:14**	**12:47**	**12:59**	**1:10**	**1:28**	**1:43**	**1:53**	**2:03**	**2:15**	**2:47**	**3:00**
2:05	**2:14**	**2:47**	**2:59**	**3:10**	**3:28**	**3:43**	**3:53**	**4:03**	**4:15**	**4:47**	**5:00**
4:05	**4:14**	**4:47**	**4:59**	**5:10**	**5:28**	**5:43**	**5:53**	**6:03**	**6:15**	**6:47**	**7:00**

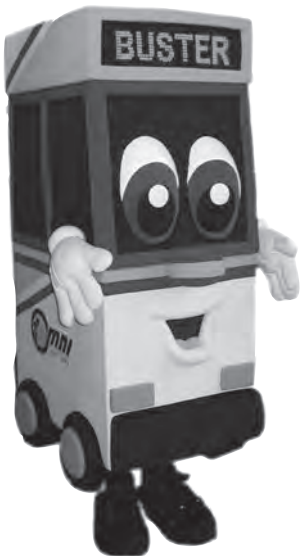

The early bird really does catch the worm! Or in this case, the bus! Getting to your bus stop early will ensure that you catch the bus you need. We'll do our best not to keep you waiting!

OMNITRANS ROUTE 9: SAN BERNARDINO – REDLANDS – YUCAIPA

9 SAN BERNARDINO - REDLANDS - YUCAIPA

Bus Route
Tripper Service
Timepoint—Look for the matching symbol in the timetable section.
METROLINK Metrolink Station
Point of interest
Medical Center
Transfer Point
1,2 Connecting Route(s)

FREQUENCY

WKDY	SAT	SUN
60	60	120

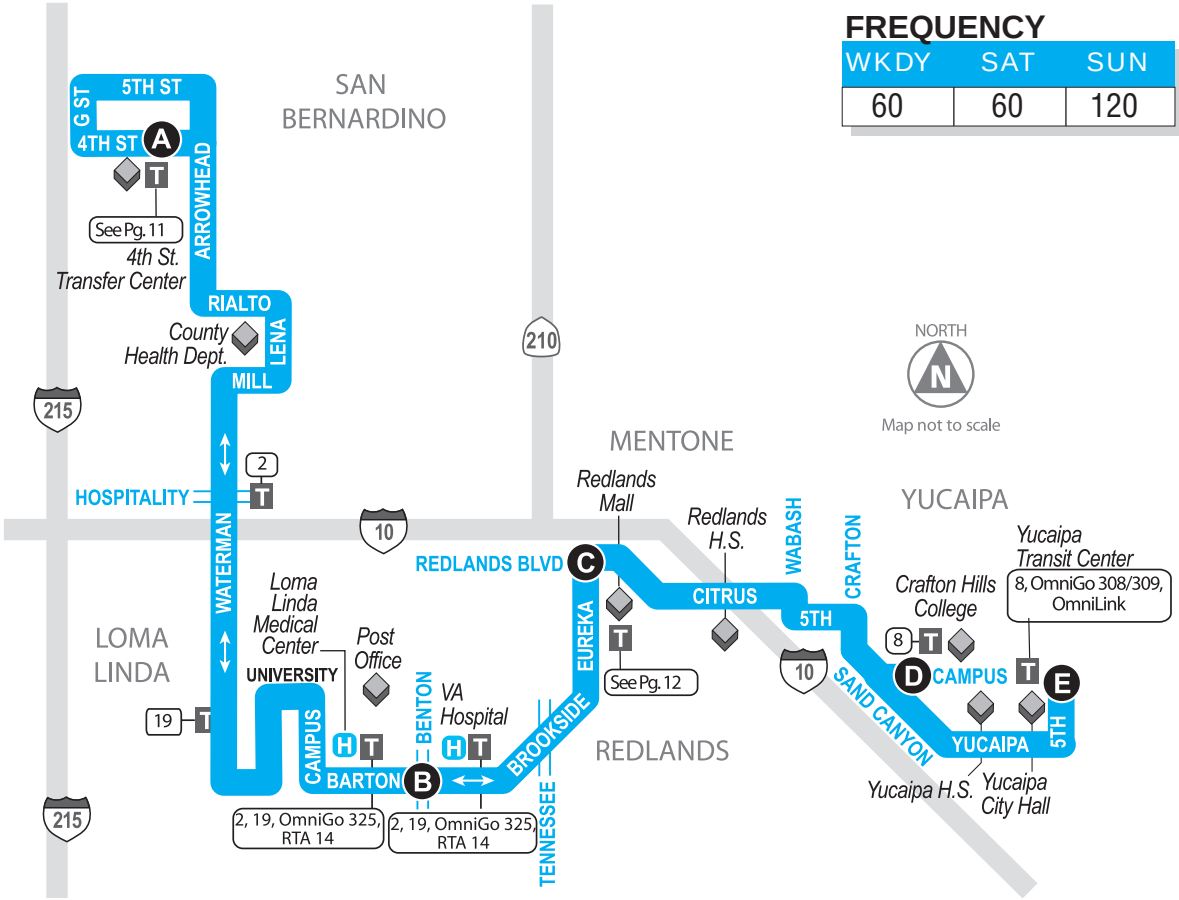

ROUTE 9: MONDAY – FRIDAY

A 4th & F	B Barton & Benton	C Redlands Mall	D Crafton Hills	E Yucaipa Transit Center	E Yucaipa Transit Center	D Crafton Hills	C Redlands Mall	B Barton & Benton	A 4th & F
EASTBOUND					**WESTBOUND**				
					5:29		5:53	6:06	6:35
					6:29	6:41	6:57	7:11	7:45
6:10	6:41	6:55	7:13	7:26	7:44	7:56	8:12	8:26	9:00
7:05	7:36	7:50	8:08	8:21	8:44	8:56	9:12	9:26	10:00
8:05	8:36	8:50	9:08	9:21	9:44	9:56	10:12	10:26	11:00
9:05	9:36	9:50	10:08	10:21	10:44	10:56	11:12	11:26	**12:00**
10:05	10:36	10:50	11:08	11:21	11:44	11:56	**12:12**	**12:26**	**1:00**
11:05	11:36	11:50	**12:08**	**12:21**	**12:44**	**12:56**	**1:12**	**1:26**	**2:00**
12:05	**12:36**	**12:50**	**1:08**	**1:21**	**1:44**	**1:56**	**2:12**	**2:26**	**3:00**
1:05	**1:36**	**1:50**	**2:08**	**2:21**	**2:29**	**2:41**	**2:57**	**3:11**	**3:45**
2:05	**2:36**	**2:50**	**3:08**	**3:21**	**3:44**	**3:56**	**4:12**	**4:26**	**5:00**
3:05	**3:36**	**3:50**	**4:08**	**4:21**	**4:44**	**4:56**	**5:12**	**5:26**	**6:00**
4:05	**4:36**	**4:50**	**5:08**	**5:21**	**5:44**	**5:56**	**6:12**	**6:26**	**7:00**
5:05	**5:36**	**5:50**	**6:08**	**6:21**	**6:44**	**6:56**	**7:12**	**7:26**	**8:00**
6:05	**6:36**	**6:50**	**7:08**	**7:21**	**7:44**	**7:56**	**8:12**	**8:26**	**9:00**
7:05	**7:36**	**7:50**	**8:08**	**8:21**	**8:54**	**9:06**	**9:22**	**9:36**	**10:03**
8:31	**9:02**	**9:16**	**9:34**	**9:47**					

ROUTE 9: SATURDAY

A 4th & F	B Barton & Benton	C Redlands Mall	D Crafton Hills	E Yucaipa Transit Center	E Yucaipa Transit Center	D Crafton Hills	C Redlands Mall	B Barton & Benton	A 4th & F
EASTBOUND					**WESTBOUND**				
					5:13		5:47	6:01	6:35
					6:18	6:31	6:47	7:01	7:35
					7:18	7:31	7:47	8:01	8:35
7:05	7:33	7:50	8:05	8:18	8:43	8:56	9:12	9:26	10:00
8:05	8:33	8:50	9:05	9:18	9:43	9:56	10:12	10:26	11:00
9:05	9:33	9:50	10:05	10:18	10:43	10:56	11:12	11:26	**12:00**
10:05	10:33	10:50	11:05	11:18	11:43	11:56	**12:12**	**12:26**	**1:00**
11:05	11:33	11:50	**12:05**	**12:18**	**12:43**	**12:56**	**1:12**	**1:26**	**2:00**
12:05	**12:33**	**12:50**	**1:05**	**1:18**	**1:43**	**1:56**	**2:12**	**2:26**	**3:00**
1:05	**1:33**	**1:50**	**2:05**	**2:18**	**2:43**	**2:56**	**3:12**	**3:26**	**4:00**
2:05	**2:33**	**2:50**	**3:05**	**3:18**	**3:43**	**3:56**	**4:12**	**4:26**	**5:00**
3:05	**3:33**	**3:50**	**4:05**	**4:18**	**4:43**	**4:56**	**5:12**	**5:26**	**6:00**
4:05	**4:33**	**4:50**	**5:05**	**5:18**	**5:43**	**5:56**	**6:12**	**6:26**	**7:00**
5:05	**5:33**	**5:50**	**6:05**	**6:18**	**6:43**	**6:56**	**7:12**	**7:26**	**8:00**
6:05	**6:33**	**6:50**	**7:05**	**7:18**	**7:43**	**7:56**	**8:12**	**8:26**	**9:00**
7:05	**7:33**	**7:50**	**8:05**	**8:18**	**8:53**	**9:06**	**9:22**	**9:36**	**10:00**
8:30	**8:51**	**8:58**	**9:08**	**9:19**					

ROUTE 9: SUNDAY

A 4th & F	B Barton & Benton	C Redlands Mall	D Crafton Hills	E Yucaipa Transit Center	E Yucaipa Transit Center	D Crafton Hills	C Redlands Mall	B Barton & Benton	A 4th & F
EASTBOUND					**WESTBOUND**				
7:05	7:36	7:50	8:05	8:18	8:44	8:56	9:12	9:26	10:00
8:55	9:26	9:40	9:55	10:08	10:44	10:56	11:12	11:26	**12:00**
11:05	11:36	11:50	**12:05**	**12:18**	**12:44**	**12:56**	**1:12**	**1:26**	**2:00**
1:05	**1:36**	**1:50**	**2:05**	**2:18**	**2:44**	**2:56**	**3:12**	**3:26**	**4:00**
3:05	**3:36**	**3:50**	**4:05**	**4:18**	**4:44**	**4:56**	**5:12**	**5:26**	**6:00**
5:30	**6:01**	**6:15**	**6:30**	**6:43**					

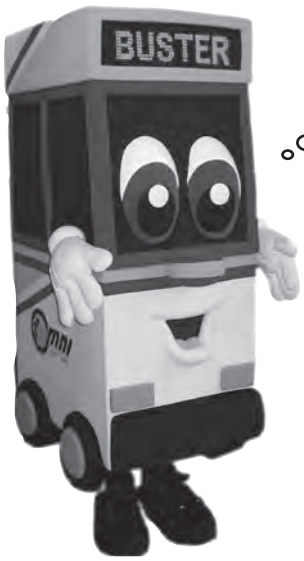

How is a bus in motion like a skunk? You don't want to walk too close to either one! Once the bus has pulled away from the curb, please don't try to board or exit. Another one will be along soon!

OMNITRANS ROUTE 10: FONTANA – BASELINE – SAN BERNARDINO

10 FONTANA - BASELINE - SAN BERNARDINO

Bus Route
Tripper Service
Timepoint—Look for the matching symbol in the timetable section.
Metrolink Station
Point of interest
Medical Center
Transfer Point
Connecting Route(s)

FREQUENCY

WKDY	SAT	SUN
30/60	60	60

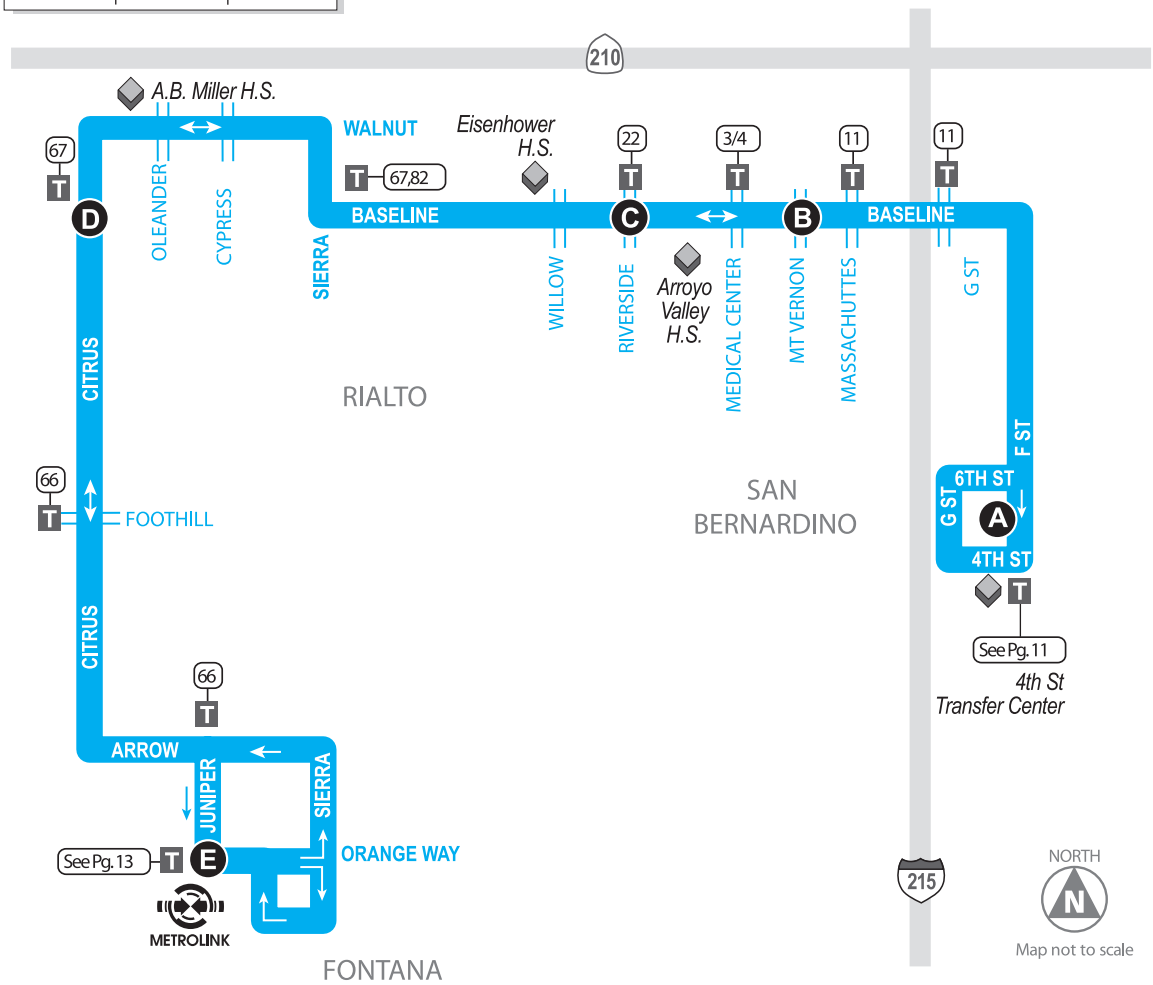

Transit Tip

All Omnitrans buses are equipped with lifts or ramps to board passengers with wheelchairs and other mobility devices, such as scooters and orthopedic strollers. Retail shopping carts are not allowed on board Omnitrans buses.

ROUTE 10: MONDAY - FRIDAY

A 4th & G St	B Baseline & Mt. Vernon	C Baseline & Riverside	D Baseline & Citrus	E Fontana Metrolink	E Fontana Metrolink	D Baseline & Citrus	C Baseline & Riverside	B Baseline & Mt. Vernon	A 4th & G St
WESTBOUND					**EASTBOUND**				
					5:15	5:27	5:45	5:56	6:08
5:10	5:21	5:32	5:48	6:00	6:25	6:37	6:55	7:06	7:18
					6:50	7:02	7:20	7:31	7:43
6:10	6:21	6:32	6:48	7:00	7:25	7:37	7:55	8:06	8:18
6:40	6:51	7:02	7:18	7:30	7:55	8:07	8:25	8:36	8:48
7:20	7:31	7:42	7:58	8:10	8:25	8:37	8:55	9:06	9:18
7:50	8:01	8:12	8:28	8:40	8:55	9:07	9:25	9:36	9:48
8:50	9:01	9:12	9:28	9:40	9:55	10:07	10:25	10:36	10:48
9:50	10:01	10:12	10:28	10:40	10:55	11:07	11:25	11:36	11:48
10:50	11:01	11:12	11:28	11:40	11:55	**12:07**	**12:25**	**12:36**	**12:48**
11:50	**12:01**	**12:12**	**12:28**	**12:40**	**12:55**	**1:07**	**1:25**	**1:36**	**1:48**
12:50	**1:01**	**1:12**	**1:28**	**1:40**	**1:55**	**2:07**	**2:25**	**2:36**	**2:48**
1:20	**1:31**	**1:42**	**1:58**	**2:10**	**2:25**	**2:37**	**2:55**	**3:06**	**3:18**
1:50	**2:01**	**2:12**	**2:30**	**2:42**	**2:55**	**3:07**	**3:31**	**3:40**	**3:52**
2:20	**2:31**	**2:42**	**2:58**	**3:10**	**3:25**	**3:37**	**3:55**	**4:06**	**4:18**
2:50	**3:01**	**3:12**	**3:28**	**3:40**	**3:55**	**4:07**	**4:25**	**4:36**	**4:48**
3:20	**3:31**	**3:42**	**3:58**	**4:10**	**4:25**	**4:37**	**4:55**	**5:06**	**5:18**
3:52	**4:03**	**4:14**	**4:30**	**4:42**	**4:55**	**5:07**	**5:25**	**5:36**	**5:48**
4:20	**4:31**	**4:42**	**4:58**	**5:10**	**5:25**	**5:37**	**5:55**	**6:06**	**6:18**
4:50	**5:01**	**5:12**	**5:28**	**5:40**	**5:55**	**6:07**	**6:25**	**6:36**	**6:48**
5:20	**5:31**	**5:42**	**5:58**	**6:10**	**6:25**	**6:37**	**6:55**	**7:06**	**7:18**
5:50	**6:01**	**6:12**	**6:28**	**6:40**					
6:20	**6:31**	**6:42**	**6:58**	**7:10**	**7:25**	**7:37**	**7:55**	**8:06**	**8:18**
6:50	**7:01**	**7:12**	**7:28**	**7:40**					
7:20	**7:31**	**7:42**	**7:58**	**8:10**					

ROUTE 10: SATURDAY

A	B	C	D	E	E	D	C	B	A
WESTBOUND					**EASTBOUND**				
					6:25	6:37	6:55	7:06	7:18
6:20	6:31	6:42	6:58	7:10	7:25	7:37	7:55	8:06	8:18
7:20	7:31	7:42	7:58	8:10	8:25	8:37	8:55	9:06	9:18
8:20	8:31	8:42	8:58	9:10	9:25	9:37	9:55	10:06	10:18
9:20	9:31	9:42	9:58	10:10	10:25	10:37	10:55	11:06	11:18
10:20	10:31	10:42	10:58	11:10	11:25	11:37	11:55	**12:06**	**12:18**
11:20	11:31	11:42	11:58	**12:10**	**12:25**	**12:37**	**12:55**	**1:06**	**1:18**
12:20	**12:31**	**12:42**	**12:58**	**1:10**	**1:25**	**1:37**	**1:55**	**2:06**	**2:18**
1:20	**1:31**	**1:42**	**1:58**	**2:10**	**2:25**	**2:37**	**2:55**	**3:06**	**3:18**
2:20	**2:31**	**2:42**	**2:58**	**3:10**	**3:25**	**3:37**	**3:55**	**4:06**	**4:18**
3:20	**3:31**	**3:42**	**3:58**	**4:10**	**4:25**	**4:37**	**4:55**	**5:06**	**5:18**
4:20	**4:31**	**4:42**	**4:58**	**5:10**	**5:25**	**5:37**	**5:55**	**6:06**	**6:18**
5:20	**5:31**	**5:42**	**5:58**	**6:10**	**6:25**	**6:37**	**6:55**	**7:06**	**7:18**
6:35	**6:46**	**6:57**	**7:13**	**7:25**					

ROUTE 10: SUNDAY

A	B	C	D	E	E	D	C	B	A
WESTBOUND					**EASTBOUND**				
					7:25	7:37	7:55	8:06	8:18
7:20	7:31	7:42	7:58	8:10	8:25	8:37	8:55	9:06	9:18
8:20	8:31	8:42	8:58	9:10	9:25	9:37	9:55	10:06	10:18
9:20	9:31	9:42	9:58	10:10	10:25	10:37	10:55	11:06	11:18
10:20	10:31	10:42	10:58	11:10	11:25	11:37	11:55	**12:06**	**12:18**
11:20	11:31	11:42	11:58	**12:10**	**12:25**	**12:37**	**12:55**	**1:06**	**1:18**
12:20	**12:31**	**12:42**	**12:58**	**1:10**	**1:25**	**1:37**	**1:55**	**2:06**	**2:18**
1:20	**1:31**	**1:42**	**1:58**	**2:10**	**2:25**	**2:37**	**2:55**	**3:06**	**3:18**
2:20	**2:31**	**2:42**	**2:58**	**3:10**	**3:25**	**3:37**	**3:55**	**4:06**	**4:18**
3:20	**3:31**	**3:42**	**3:58**	**4:10**	**4:25**	**4:37**	**4:55**	**5:06**	**5:18**
4:20	**4:31**	**4:42**	**4:58**	**5:10**	**5:25**	**5:37**	**5:55**	**6:06**	**6:18**
5:20	**5:31**	**5:42**	**5:58**	**6:10**					

OMNITRANS ROUTE 11: SAN BERNARDINO – MUSCOY – CAL STATE

11 SAN BERNARDINO - MUSCOY - CAL STATE

Bus Route
Tripper Service
Timepoint—Look for the matching symbol in the timetable section.
Metrolink Station
Point of interest
Medical Center
Transfer Point
Connecting Route(s)

FREQUENCY

WKDY	SAT	SUN
60	60	60

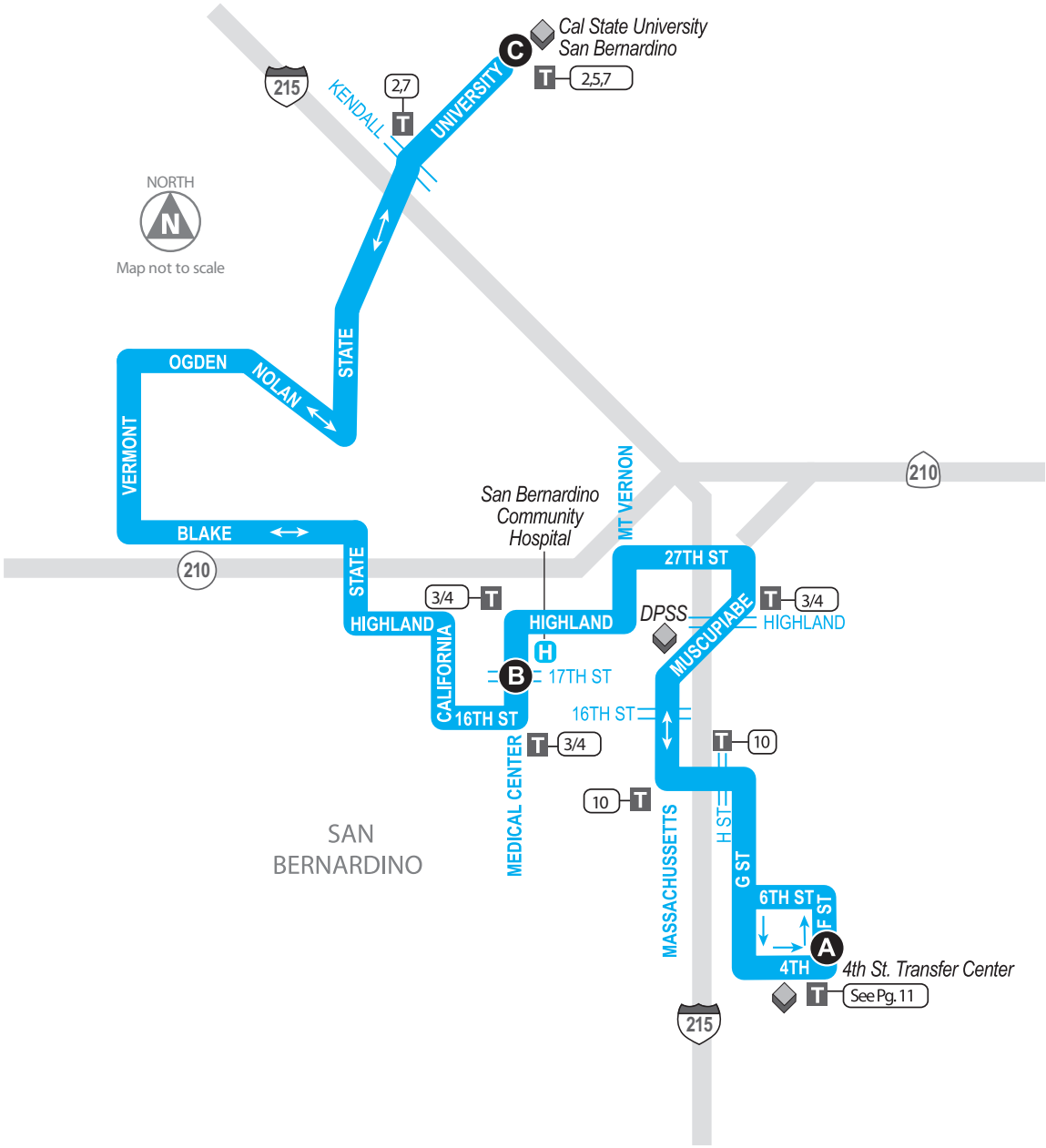

ROUTE 11: MONDAY – FRIDAY

NORTHBOUND			SOUTHBOUND		
A 4th & G St	B 17th & Medical Center	C Cal State University	C Cal State University	B 17th & Medical Center	A 4th & G St
			5:33	5:58	6:17
5:28	5:48	6:12	6:28	6:55	7:17
6:25	6:45	7:12	7:28	7:55	8:17
7:25	7:45	8:12	8:28	8:55	9:17
8:25	8:45	9:12	9:28	9:55	10:17
9:25	9:45	10:12	10:28	10:55	11:17
10:25	10:45	11:12	11:28	11:55	**12:17**
11:25	11:45	**12:12**	**12:28**	**12:55**	**1:17**
12:25	**12:45**	**1:12**	**1:28**	**1:55**	**2:17**
1:25	**1:45**	**2:12**	**2:28**	**2:55**	**3:17**
2:25	**2:45**	**3:12**	**3:28**	**3:55**	**4:17**
3:25	**3:45**	**4:12**	**4:28**	**4:55**	**5:17**
3:55	**4:15**	**4:42**	**4:58**	**5:25**	**5:47**
4:25	**4:45**	**5:12**	**5:28**	**5:55**	**6:17**
5:25	**5:45**	**6:12**	**6:28**	**6:55**	**7:17**
5:55	**6:15**	**6:42**			
6:35	**6:55**	**7:22**	**7:28**	**7:55**	**8:17**
7:35	**7:55**	**8:22**	**8:26**	**8:53**	**9:15**
8:35	**8:55**	**9:22**	**9:26**	**9:48**	**10:08**
9:35	**9:50**	**10:17**			

ROUTE 11: SATURDAY

NORTHBOUND			SOUTHBOUND		
A 4th & G St	B 17th & Medical Center	C Cal State University	C Cal State University	B 17th & Medical Center	A 4th & G St
			6:58	7:25	7:45
			7:58	8:25	8:45
7:55	8:15	8:42	8:58	9:25	9:45
8:55	9:15	9:42	9:58	10:25	10:45
9:55	10:15	10:42	10:58	11:25	11:45
10:55	11:15	11:42	11:58	**12:25**	**12:45**
11:55	**12:15**	**12:42**	**12:58**	**1:25**	**1:45**
12:55	**1:15**	**1:42**	**1:58**	**2:25**	**2:45**
1:55	**2:15**	**2:42**	**2:58**	**3:25**	**3:45**
2:55	**3:15**	**3:42**	**3:58**	**4:25**	**4:45**
3:55	**4:15**	**4:42**	**4:58**	**5:25**	**5:45**
4:55	**5:15**	**5:42**			
6:00	**6:20**	**6:47**			

ROUTE 11: SUNDAY

NORTHBOUND			SOUTHBOUND		
A 4th & G St	B 17th & Medical Center	C Cal State University	C Cal State University	B 17th & Medical Center	A 4th & G St
			7:27	7:54	8:15
7:25	7:45	8:12	8:27	8:54	9:15
8:25	8:45	9:12	9:27	9:54	10:15
9:25	9:45	10:12	10:27	10:54	11:15
10:25	10:45	11:12	11:27	11:54	**12:15**
11:25	11:45	**12:12**	**12:27**	**12:54**	**1:15**
12:25	**12:45**	**1:12**	**1:27**	**1:54**	**2:15**
1:25	**1:45**	**2:12**	**2:27**	**2:54**	**3:15**
2:25	**2:45**	**3:12**	**3:27**	**3:54**	**4:15**
3:25	**3:45**	**4:12**	**4:27**	**4:54**	**5:15**
4:25	**4:45**	**5:12**	**5:27**	**5:54**	**6:15**
5:25	**5:45**	**6:12**			
6:35	**6:55**	**7:22**			

OMNITRANS ROUTE 14: FONTANA – FOOTHILL – SAN BERNARDINO

14 FONTANA - FOOTHILL - SAN BERNARDINO

Bus Route
Tripper Service
A Timepoint—Look for the matching symbol in the timetable section.
METROLINK Metrolink Station
Point of interest
H Medical Center
T Transfer Point
1,2 Connecting Route(s)

FREQUENCY

WKDY	SAT	SUN
15	15/30	15

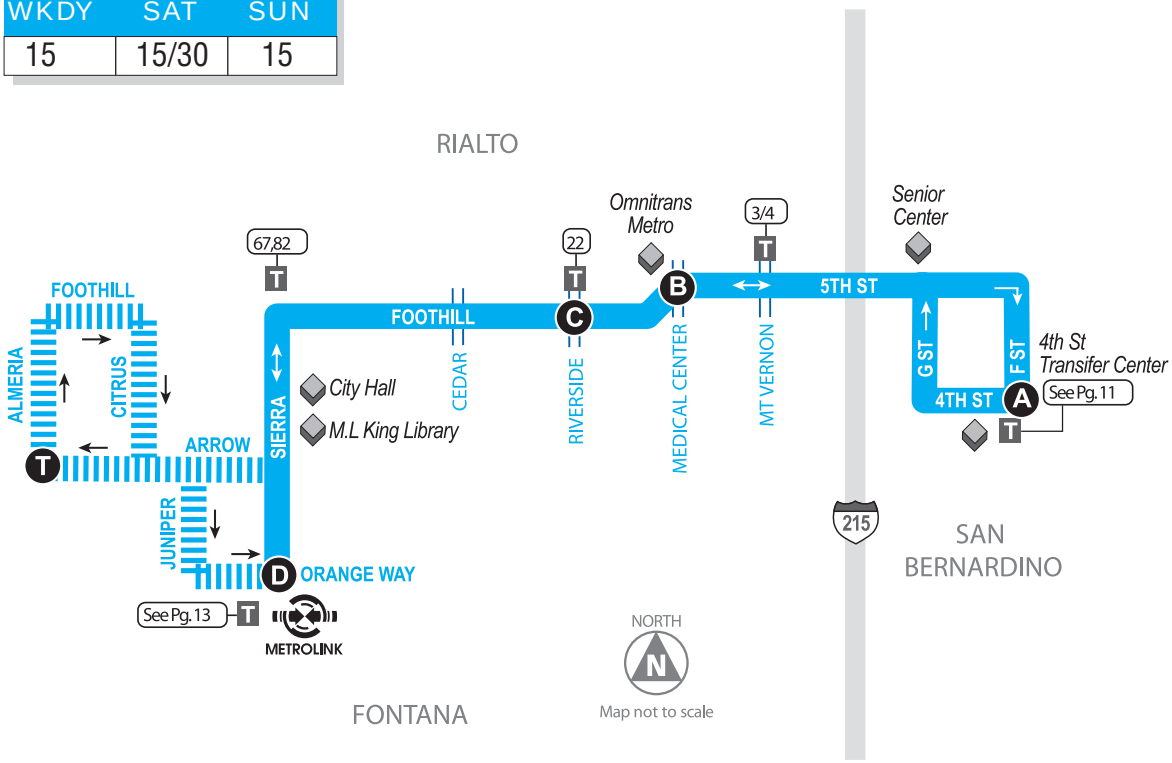

ROUTE 14: MONDAY - FRIDAY

WESTBOUND					EASTBOUND				
A 4th & F St	B 5th & Medical Center	C Foothill & Riverside	T Almeria	D Fontana Metrolink	D Fontana Metrolink	T Almeria	C Foothill & Riverside	B 5th & Medical Center	A 4th & F St
3:48	3:55	4:02		4:17	4:30		4:50	4:58	5:08
4:20	4:27	4:34		4:49	5:10		5:31	5:40	5:53
5:08	5:15	5:23		5:41	6:05		6:26	6:35	6:48
5:34	5:45	5:58		6:19	6:20		6:41	6:50	7:03
					6:35		6:56	7:05	7:18
6:02	6:13	6:26		6:47	6:50		7:11	7:20	7:33
6:17	6:28	6:41		7:02	7:05		7:26	7:35	7:48
6:32	6:43	6:56		7:17	7:20		7:41	7:50	8:03
6:47	6:58	7:11		7:32	7:35		7:56	8:05	8:18
7:02	7:13	7:26		7:47	7:50		8:11	8:20	8:33
7:15	7:28	7:39		8:00		8:08			
					8:05		8:26	8:35	8:48
7:32	7:43	7:56		8:17	8:20		8:41	8:50	9:03
7:47	7:58	8:11		8:32	8:35		8:56	9:05	9:18
8:02	8:13	8:26		8:47	8:50		9:11	9:20	9:33
8:17	8:28	8:41		9:02	9:05		9:26	9:35	9:48
8:32	8:43	8:56		9:17	9:20		9:41	9:50	10:03
8:47	8:58	9:11		9:32	9:35		9:56	10:05	10:18
9:02	9:13	9:26		9:47	9:50		10:11	10:20	10:33
9:17	9:28	9:41		10:02	10:05		10:26	10:35	10:48
9:32	9:43	9:56		10:17	10:20		10:41	10:50	11:03
9:47	9:58	10:11		10:32	10:35		10:56	11:05	11:18
10:02	10:13	10:26		10:47	10:50		11:11	11:20	11:33
10:17	10:28	10:41		11:02	11:05		11:26	11:35	11:48
10:32	10:43	10:56		11:17	11:20		11:41	11:50	**12:03**
10:47	10:58	11:11		11:32	11:35		11:56	**12:05**	**12:18**
11:02	11:13	11:26		11:47	11:50		**12:11**	**12:20**	**12:33**
11:17	11:28	11:41		**12:02**	**12:05**		**12:26**	**12:35**	**12:48**
11:32	11:43	11:56		**12:17**	**12:20**		**12:41**	**12:50**	**1:03**
11:47	11:58	**12:11**		**12:32**	**12:35**		**12:56**	**1:05**	**1:18**
12:02	**12:13**	**12:26**		**12:47**	**12:50**		**1:11**	**1:20**	**1:33**
12:17	**12:28**	**12:41**		**1:02**	**1:05**		**1:26**	**1:35**	**1:48**
12:32	**12:43**	**12:56**		**1:17**	**1:20**		**1:41**	**1:50**	**2:03**
12:47	**12:58**	**1:11**		**1:32**	**1:35**		**1:56**	**2:05**	**2:18**
1:02	**1:13**	**1:26**		**1:47**	**1:50**		**2:11**	**2:20**	**2:33**
1:17	**1:28**	**1:41**		**2:02**	**2:05**		**2:26**	**2:35**	**2:48**
1:32	**1:43**	**1:56**		**2:17**	**2:20**		**2:41**	**2:50**	**3:03**
1:47	**1:58**	**2:11**		**2:32**	**2:35**		**2:56**	**3:05**	**3:18**
2:02	**2:13**	**2:26**		**2:47**	**2:50**		**3:11**	**3:20**	**3:33**
2:17	**2:28**	**2:41**		**3:02**	**3:05**		**3:26**	**3:35**	**3:48**
2:32	**2:43**	**2:56**		**3:17**	**3:20**		**3:41**	**3:50**	**4:03**
2:47	**2:58**	**3:11**		**3:32**	**3:35**		**3:56**	**4:05**	**4:18**
3:02	**3:13**	**3:26**		**3:47**	**3:50**		**4:11**	**4:20**	**4:33**
3:17	**3:28**	**3:41**		**4:02**					
			3:55		**4:05**		**4:26**	**4:37**	**4:50**
3:32	**3:43**	**3:56**		**4:17**	**4:20**		**4:41**	**4:50**	**5:03**
3:47	**3:58**	**4:11**		**4:32**	**4:35**		**4:56**	**5:05**	**5:18**
4:02	**4:13**	**4:26**		**4:47**	**4:50**		**5:11**	**5:20**	**5:33**
4:17	**4:28**	**4:41**		**5:02**	**5:05**		**5:26**	**5:35**	**5:48**
4:32	**4:43**	**4:56**		**5:17**	**5:20**		**5:41**	**5:50**	**6:03**
4:47	**4:58**	**5:11**		**5:32**	**5:35**		**5:56**	**6:05**	**6:18**
5:02	**5:13**	**5:26**		**5:47**	**5:50**		**6:11**	**6:20**	**6:33**
5:17	**5:28**	**5:41**		**6:02**	**6:05**		**6:26**	**6:35**	**6:48**
5:32	**5:43**	**5:56**		**6:17**					
5:47	**5:58**	**6:11**		**6:32**	**6:35**		**6:56**	**7:05**	**7:18**
6:02	**6:13**	**6:26**		**6:47**					
6:17	**6:28**	**6:41**		**7:02**	**7:05**		**7:26**	**7:35**	**7:48**
6:32	**6:43**	**6:56**		**7:17**					
6:47	**6:58**	**7:11**		**7:32**	**7:35**		**7:56**	**8:05**	**8:18**
7:02	**7:13**	**7:26**		**7:47**	**8:05**		**8:26**	**8:35**	**8:48**
7:32	**7:43**	**7:56**		**8:17**	**8:35**		**8:52**	**9:00**	**9:10**
8:32	**8:43**	**8:56**		**9:17**	**9:18**		**9:35**	**9:43**	**9:53**
9:34	**9:43**	**9:51**		**10:09**	**10:30**		**10:47**	**10:55**	**11:05**
10:15	**10:24**	**10:32**		**10:50**					

ROUTE 14: SATURDAY

WESTBOUND				EASTBOUND			
A 4th & F St	B 5th & Medical Center	C Foothill & Riverside	D Fontana Metrolink	D Fontana Metrolink	C Foothill & Riverside	B 5th & Medical Center	A 4th & F St
				6:05	6:24	6:33	6:45
				7:05	7:24	7:33	7:45
6:35	6:43	6:53	7:13	7:20	7:39	7:48	8:00
7:05	7:13	7:23	7:43	7:50	8:09	8:18	8:30
				8:05	8:24	8:33	8:45
7:35	7:43	7:53	8:13	8:20	8:39	8:48	9:00
				8:35	8:54	9:03	9:15
8:05	8:13	8:23	8:43	8:50	9:09	9:18	9:30
8:20	8:28	8:38	8:58	9:05	9:24	9:33	9:45
8:35	8:43	8:53	9:13	9:20	9:39	9:48	10:00
8:50	8:58	9:08	9:28	9:35	9:54	10:03	10:15
9:05	9:13	9:23	9:43	9:50	10:09	10:18	10:30
9:20	9:28	9:38	9:58	10:05	10:26	10:36	10:49
9:35	9:43	9:53	10:13	10:20	10:41	10:51	11:04
9:50	9:58	10:08	10:28	10:35	10:56	11:06	11:19
10:01	10:13	10:24	10:45	10:50	11:11	11:21	11:34
10:16	10:28	10:39	11:00	11:05	11:26	11:36	11:49
10:31	10:43	10:54	11:15	11:20	11:41	11:51	**12:04**
10:46	10:58	11:09	11:30	11:35	11:56	**12:06**	**12:19**
11:01	11:13	11:24	11:45	11:50	**12:11**	**12:21**	**12:34**
11:16	11:28	11:39	**12:00**	**12:05**	**12:26**	**12:36**	**12:49**
11:31	11:43	11:54	**12:15**	**12:20**	**12:41**	**12:51**	**1:04**
11:46	11:58	**12:09**	**12:30**	**12:35**	**12:56**	**1:06**	**1:19**
12:01	**12:13**	**12:24**	**12:45**	**12:50**	**1:11**	**1:21**	**1:34**
12:16	**12:28**	**12:39**	**1:00**	**1:05**	**1:26**	**1:36**	**1:49**
12:31	**12:43**	**12:54**	**1:15**	**1:20**	**1:41**	**1:51**	**2:04**
12:46	**12:58**	**1:09**	**1:30**	**1:35**	**1:56**	**2:06**	**2:19**
1:01	**1:13**	**1:24**	**1:45**	**1:50**	**2:11**	**2:21**	**2:34**
1:16	**1:28**	**1:39**	**2:00**	**2:05**	**2:23**	**2:31**	**2:43**
1:31	**1:43**	**1:54**	**2:15**	**2:20**	**2:38**	**2:46**	**2:58**
1:46	**1:58**	**2:09**	**2:30**	**2:35**	**2:53**	**3:01**	**3:13**
2:03	**2:13**	**2:23**	**2:43**	**2:50**	**3:08**	**3:16**	**3:28**
2:18	**2:28**	**2:38**	**2:58**	**3:05**	**3:23**	**3:31**	**3:43**
2:33	**2:43**	**2:53**	**3:13**	**3:20**	**3:38**	**3:46**	**3:58**
2:48	**2:58**	**3:08**	**3:28**	**3:35**	**3:53**	**4:01**	**4:13**
3:03	**3:13**	**3:23**	**3:43**	**3:50**	**4:08**	**4:16**	**4:28**
3:18	**3:28**	**3:38**	**3:58**	**4:05**	**4:23**	**4:31**	**4:43**
3:33	**3:43**	**3:53**	**4:13**	**4:20**	**4:38**	**4:46**	**4:58**
3:48	**3:58**	**4:08**	**4:28**	**4:35**	**4:53**	**5:01**	**5:13**
4:03	**4:13**	**4:23**	**4:43**	**4:50**	**5:08**	**5:16**	**5:28**
4:18	**4:28**	**4:38**	**4:58**	**5:05**	**5:23**	**5:31**	**5:43**
4:33	**4:43**	**4:53**	**5:13**	**5:20**	**5:38**	**5:46**	**5:58**
4:48	**4:58**	**5:08**	**5:28**	**5:35**	**5:53**	**6:01**	**6:13**
5:03	**5:13**	**5:23**	**5:43**	**5:50**	**6:08**	**6:16**	**6:28**
5:18	**5:28**	**5:38**	**5:58**				
5:33	**5:43**	**5:53**	**6:13**	**6:20**	**6:38**	**6:46**	**6:58**
5:48	**5:58**	**6:08**	**6:28**				
6:03	**6:13**	**6:23**	**6:43**	**6:50**	**7:08**	**7:16**	**7:28**
6:33	**6:43**	**6:53**	**7:13**	**7:20**	**7:38**	**7:46**	**7:58**
7:10	**7:18**	**7:26**	**7:45**				
7:40	**7:48**	**7:56**	**8:15**	**8:20**	**8:38**	**8:46**	**8:58**
8:10	**8:18**	**8:26**	**8:45**	**8:50**	**9:08**	**9:16**	**9:28**
9:10	**9:18**	**9:26**	**9:45**	**9:50**	**10:08**	**10:16**	**10:28**

ROUTE 14: SUNDAY

A	B	C	D	D	C	B	A
4th & F St	5th & Medical Center	Foothill & Riverside	Fontana Metrolink	Fontana Metrolink	Foothill & Riverside	5th & Medical Center	4th & F St
WESTBOUND				**EASTBOUND**			
				6:05	6:24	6:33	6:45
				7:05	7:24	7:33	7:45
				7:35	7:54	8:03	8:15
7:05	7:13	7:23	7:43	7:50	8:09	8:18	8:30
				8:05	8:24	8:33	8:45
7:35	7:43	7:53	8:13	8:20	8:39	8:48	9:00
				8:35	8:54	9:03	9:15
8:05	8:13	8:23	8:43	8:50	9:09	9:18	9:30
8:20	8:28	8:38	8:58	9:05	9:24	9:33	9:45
8:35	8:43	8:53	9:13	9:20	9:39	9:48	10:00
8:50	8:58	9:08	9:28	9:35	9:54	10:03	10:15
9:05	9:13	9:23	9:43	9:50	10:09	10:18	10:30
9:20	9:28	9:38	9:58	10:05	10:26	10:36	10:49
9:35	9:43	9:53	10:13	10:20	10:41	10:51	11:04
9:50	9:58	10:08	10:28	10:35	10:56	11:06	11:19
10:01	10:13	10:24	10:45	10:50	11:11	11:21	11:34
10:16	10:28	10:39	11:00	11:05	11:26	11:36	11:49
10:31	10:43	10:54	11:15	11:20	11:41	11:51	**12:04**
10:46	10:58	11:09	11:30	11:35	11:56	**12:06**	**12:19**
11:01	11:13	11:24	11:45	11:50	**12:11**	**12:21**	**12:34**
11:16	11:28	11:39	**12:00**	**12:05**	**12:26**	**12:36**	**12:49**
11:31	11:43	11:54	**12:15**	**12:20**	**12:41**	**12:51**	**1:04**
11:46	11:58	**12:09**	**12:30**	**12:35**	**12:56**	**1:06**	**1:19**
12:01	**12:13**	**12:24**	**12:45**	**12:50**	**1:11**	**1:21**	**1:34**
12:16	**12:28**	**12:39**	**1:00**	**1:05**	**1:26**	**1:36**	**1:49**
12:31	**12:43**	**12:54**	**1:15**	**1:20**	**1:41**	**1:51**	**2:04**
12:46	**12:58**	**1:09**	**1:30**	**1:35**	**1:56**	**2:06**	**2:19**
1:01	**1:13**	**1:24**	**1:45**	**1:50**	**2:11**	**2:21**	**2:34**
1:16	**1:28**	**1:39**	**2:00**	**2:05**	**2:23**	**2:31**	**2:43**
1:31	**1:43**	**1:54**	**2:15**	**2:20**	**2:38**	**2:46**	**2:58**
1:46	**1:58**	**2:09**	**2:30**	**2:35**	**2:53**	**3:01**	**3:13**
2:03	**2:13**	**2:23**	**2:43**	**2:50**	**3:08**	**3:16**	**3:28**
2:18	**2:28**	**2:38**	**2:58**	**3:05**	**3:23**	**3:31**	**3:43**
2:33	**2:43**	**2:53**	**3:13**	**3:20**	**3:38**	**3:46**	**3:58**
2:48	**2:58**	**3:08**	**3:28**	**3:35**	**3:53**	**4:01**	**4:13**
3:03	**3:13**	**3:23**	**3:43**	**3:50**	**4:08**	**4:16**	**4:28**
3:18	**3:28**	**3:38**	**3:58**	**4:05**	**4:23**	**4:31**	**4:43**
3:33	**3:43**	**3:53**	**4:13**	**4:20**	**4:38**	**4:46**	**4:58**
3:48	**3:58**	**4:08**	**4:28**	**4:35**	**4:53**	**5:01**	**5:13**
4:03	**4:13**	**4:23**	**4:43**	**4:50**	**5:08**	**5:16**	**5:28**
4:18	**4:28**	**4:38**	**4:58**	**5:05**	**5:23**	**5:31**	**5:39**
4:33	**4:43**	**4:53**	**5:13**	**5:20**	**5:38**	**5:46**	**5:54**
4:48	**4:58**	**5:08**	**5:28**	**5:35**	**5:53**	**6:01**	**6:09**
5:03	**5:13**	**5:23**	**5:43**	**5:50**	**6:08**	**6:16**	**6:24**
5:18	**5:28**	**5:38**	**5:58**	**6:05**	**6:23**	**6:31**	**6:39**
5:33	**5:43**	**5:53**	**6:13**	**6:20**	**6:38**	**6:46**	**6:54**
5:48	**5:58**	**6:08**	**6:28**	**6:50**	**7:08**	**7:16**	**7:24**
6:18	**6:28**	**6:38**	**6:58**				

Transit Tip

Some of us are a little bit country, and some may be a little bit rock and roll (not to mention rap or classical). Everyone deserves to enjoy their own music - but everyone deserves a little peace and quiet, too. If you'd like to enjoy your personal headphone radio, CD player, or MP3 player onboard, please respect your driver and fellow passengers by keeping the volume low. Thanks!

OMNITRANS ROUTE 15: FONTANA – SAN BERNARDINO/HIGHLAND – REDLANDS

15 FONTANA - SAN BDNO/HIGHLAND - REDLANDS

Bus Route
Tripper Service
Timepoint—Look for the matching symbol in the timetable section.
Metrolink Station
Point of interest
Medical Center
Transfer Point
Connecting Route(s)

FREQUENCY

WKDY	SAT	SUN
30	60	60

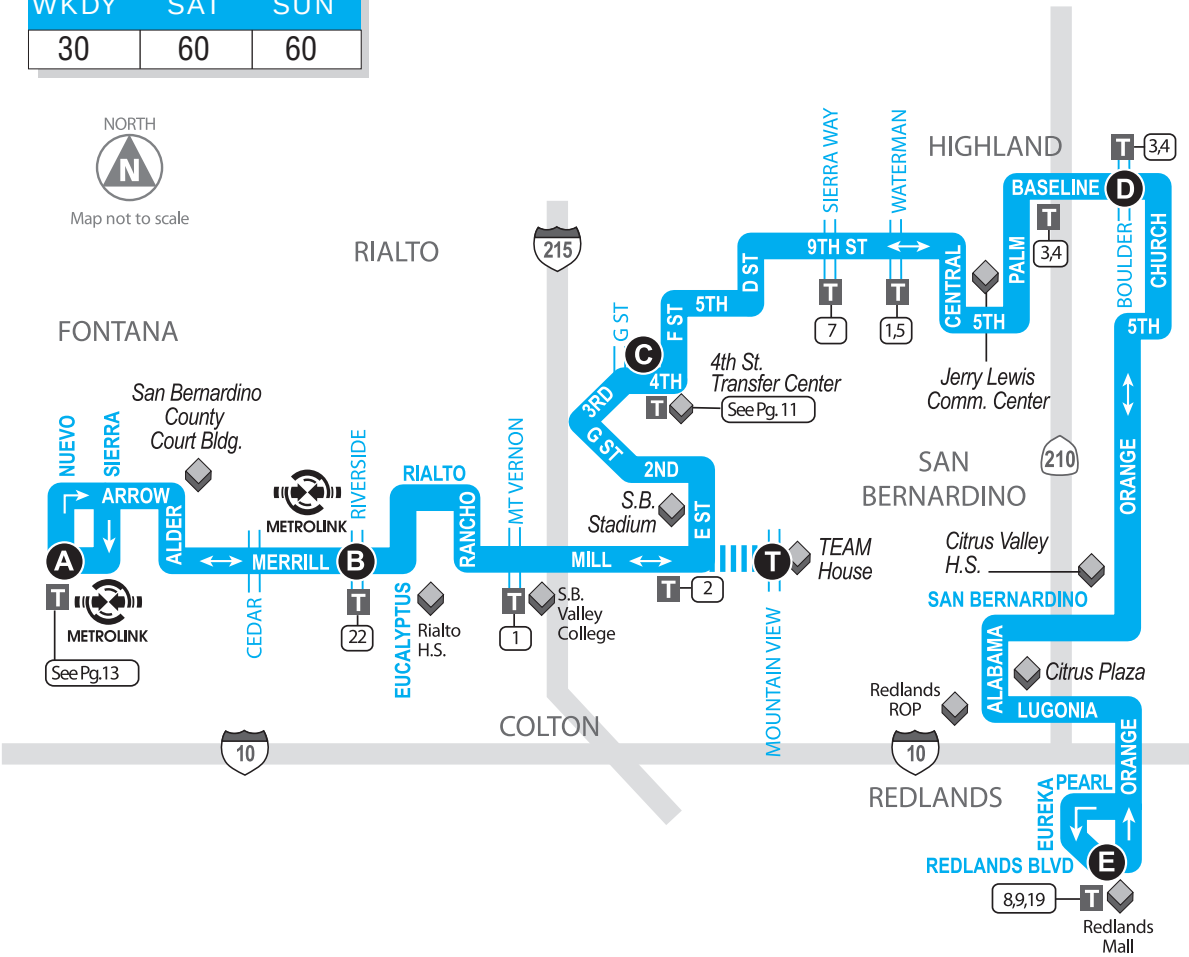

Transit Tip

If you travel with a baby in a stroller, please make sure that you have your baby out of the stroller and have the stroller folded up before the bus gets to the bus stop. This allows you to be ready to ride and saves everyone time.

ROUTE 15: MONDAY – FRIDAY

A Fontana Metrolink	B Merril & Riverside	T TEAM House	C 4th & F St	D Baseline & Boulder	E Redlands Mall	D Baseline & Boulder	C 4th & F St	T TEAM House	B Merril & Riverside	A Fontana Metrolink
EASTBOUND						**WESTBOUND**				
							5:16		5:40	5:55
							5:46		6:10	6:25
						5:15	5:40	6:08	6:10	6:35	6:53
						6:10	6:35	7:03	7:05	7:32	7:52
			5:29	5:54	6:18	6:35	7:05		7:38	8:05	8:25
			6:02	6:27	6:51	7:05	7:35	8:08	8:10	8:37	8:57
			6:32	6:57	7:23	7:35	8:01	8:34	8:36	8:43	9:05	9:25
6:09	6:27	6:56	7:01	7:28	7:58	8:05	8:35	9:08	9:10	9:37	9:57
6:39	6:57	7:26	7:31	7:58	8:28	8:35	9:05	9:38	9:40	10:07	10:27
7:09	7:27	7:56	8:01	8:28	8:58	9:05	9:35	10:08	10:10	10:37	10:57
7:39	7:57	8:26	8:31	8:58	9:28	9:35	10:05	10:38	10:40	11:07	11:27
8:09	8:27	8:56	9:01	9:28	9:58	10:05	10:35	11:08	11:10	11:37	11:57
8:39	8:57	9:26	9:31	9:58	10:28	10:35	11:05	11:38	11:40	**12:07**	**12:27**
9:09	9:27	9:56	10:01	10:28	10:58	11:05	11:35	**12:08**	**12:10**	**12:37**	**12:57**
9:39	9:57	10:26	10:31	10:58	11:28	11:35	**12:05**	**12:38**	**12:40**	**1:07**	**1:27**
10:09	10:27	10:56	11:01	11:28	11:58	**12:05**	**12:35**	**1:08**	**1:10**	**1:37**	**1:57**
10:39	10:57	11:26	11:31	11:58	**12:28**	**12:35**	**1:05**	**1:38**	**1:40**	**2:07**	**2:27**
11:09	11:27	11:56	**12:01**	**12:28**	**12:58**	**1:05**	**1:35**	**2:08**	**2:10**	**2:37**	**2:57**
11:39	11:57	**12:26**	**12:31**	**12:58**	**1:28**	**1:35**	**2:05**	**2:38**	**2:40**	**3:07**	**3:27**
12:09	**12:27**	**12:56**	**1:01**	**1:28**	**1:58**	**2:05**	**2:35**	**3:08**	**3:10**	**3:37**	**3:57**
12:39	**12:57**	**1:26**	**1:31**	**1:58**	**2:28**	**2:35**	**3:05**	**3:38**	**3:40**	**4:07**	**4:27**
1:09	**1:27**	**1:56**	**2:01**	**2:28**	**2:58**	**3:05**	**3:35**	**4:08**	**4:10**	**4:37**	**4:57**
1:39	**1:57**	**2:19**	**2:30**	**2:31**	**3:00**	**3:26**	**3:35**	**4:05**	**4:38**	**4:40**	**5:07**	**5:27**
2:09	**2:27**		**2:56**	**3:01**	**3:28**	**3:58**	**4:05**	**4:35**	**5:08**	**5:10**	**5:37**	**5:57**
2:39	**2:57**		**3:26**	**3:31**	**3:58**	**4:28**	**4:35**	**5:05**	**5:38**	**5:40**	**6:07**	**6:27**
3:09	**3:27**		**3:56**	**4:01**	**4:28**	**4:58**	**5:05**	**5:35**	**6:08**	**6:10**	**6:37**	**6:57**
3:39	**3:57**		**4:26**	**4:31**	**4:58**	**5:28**	**5:35**	**6:01**	**6:34**	**6:36**	**7:03**	**7:18**
4:09	**4:27**		**4:56**	**5:01**	**5:28**	**5:58**	**6:05**	**6:31**	**7:04**	**7:06**	**7:33**	**7:48**
4:39	**4:57**		**5:26**	**5:31**	**5:58**	**6:28**	**6:35**	**7:01**		**7:29**		
5:09	**5:27**		**5:56**	**6:01**	**6:28**	**6:58**	**7:07**	**7:33**		**8:01**		
5:39	**5:57**		**6:26**	**6:31**	**6:58**	**7:28**	**7:35**	**8:01**	**8:24**			
6:09	**6:27**		**6:56**	**7:01**	**7:28**	**7:58**	**8:07**	**8:33**		**8:56**		
6:39	**6:57**		**7:26**	**7:31**	**7:58**	**8:28**	**8:35**	**9:01**	**9:24**			
7:09	**7:27**		**7:56**	**8:01**	**8:28**		**8:58**					
			8:24	**8:40**	**9:05**	**9:31**	**9:45**	**10:11**		**10:39**		
			9:24	**9:45**	**10:10**		**10:36**					

Transit Tip

Heading to the Fontana Metrolink? Routes 10, 14, 15, 19, 20, 61, 66, 67 and 82 will take you there. Check to see which schedule works best for you!

ROUTE 15: SATURDAY

A Fontana Metrolink	B Merril & Riverside	C 4th & F St	D Baseline & Boulder	E Redlands Mall	D Baseline & Boulder	C 4th & F St	B Merril & Riverside	A Fontana Metrolink
EASTBOUND					**WESTBOUND**			
							7:14	7:41	7:59
					7:37	8:07	8:40	8:43	9:10	9:28
			7:30	7:57	8:23	8:37	9:07	9:40	9:43	10:10	10:28
7:43	8:01	8:30	8:35	9:02	9:32	9:37	10:07	10:40	10:43	11:10	11:28
8:43	9:01	9:30	9:35	10:02	10:32	10:37	11:07	11:40	11:43	**12:10**	**12:28**
9:43	10:01	10:30	10:35	11:02	11:32	11:37	**12:07**	**12:40**	**12:43**	**1:10**	**1:28**
10:43	11:01	11:30	11:35	**12:02**	**12:32**	**12:37**	**1:07**	**1:40**	**1:43**	**2:10**	**2:28**
11:43	**12:01**	**12:30**	**12:35**	**1:02**	**1:32**	**1:37**	**2:07**	**2:40**	**2:43**	**3:10**	**3:28**
12:43	**1:01**	**1:30**	**1:35**	**2:02**	**2:32**	**2:37**	**3:07**	**3:40**	**3:43**	**4:10**	**4:28**
1:43	**2:01**	**2:30**	**2:35**	**3:02**	**3:32**	**3:37**	**4:07**	**4:40**	**4:43**	**5:10**	**5:28**
2:43	**3:01**	**3:30**	**3:35**	**4:02**	**4:32**	**4:37**	**5:07**	**5:40**	**5:43**	**6:10**	**6:28**
3:43	**4:01**	**4:30**	**4:35**	**5:02**	**5:32**	**5:35**	**6:01**	**6:34**			
4:43	**5:01**	**5:30**	**5:35**	**6:02**	**6:32**						
5:43	**6:01**	**6:30**	**6:35**	**7:02**	**7:32**						
6:43	**7:01**	**7:26**									

ROUTE 15: SUNDAY

A Fontana Metrolink	B Merril & Riverside	C 4th & F St	D Baseline & Boulder	E Redlands Mall	D Baseline & Boulder	C 4th & F St	B Merril & Riverside	A Fontana Metrolink
EASTBOUND					**WESTBOUND**			
					6:37	7:07	7:40	7:43	8:10	8:28
					7:37	8:07	8:40	8:43	9:10	9:28
			7:30	7:57	8:23	8:37	9:07	9:40	9:43	10:10	10:28
7:43	8:01	8:30	8:35	9:02	9:32	9:37	10:07	10:40	10:43	11:10	11:28
8:43	9:01	9:30	9:35	10:02	10:32	10:37	11:07	11:40	11:43	**12:10**	**12:28**
9:43	10:01	10:30	10:35	11:02	11:32	11:37	**12:07**	**12:40**	**12:43**	**1:10**	**1:28**
10:43	11:01	11:30	11:35	**12:02**	**12:32**	**12:37**	**1:07**	**1:40**	**1:43**	**2:10**	**2:28**
11:43	**12:01**	**12:30**	**12:35**	**1:02**	**1:32**	**1:37**	**2:07**	**2:40**	**2:43**	**3:10**	**3:28**
12:43	**1:01**	**1:30**	**1:35**	**2:02**	**2:32**	**2:37**	**3:07**	**3:40**	**3:43**	**4:10**	**4:28**
1:43	**2:01**	**2:30**	**2:35**	**3:02**	**3:32**	**3:37**	**4:07**	**4:40**	**4:43**	**5:10**	**5:28**
2:43	**3:01**	**3:30**	**3:35**	**4:02**	**4:32**	**4:35**	**5:01**	**5:24**			
3:43	**4:01**	**4:30**	**4:35**	**5:02**	**5:32**	**5:35**	**6:01**	**6:24**			
4:43	**5:01**	**5:30**	**5:35**	**6:02**	**6:32**						
5:43	**6:01**	**6:30**	**6:35**	**7:02**	**7:32**						

We want you to be comfortable on your bus ride, but hey, this isn't mom's couch! Please, no feet on the seats. Thank you!

OMNITRANS ROUTE 215: SAN BERNARDINO – RIVERSIDE

215 SAN BERNARDINO - RIVERSIDE

Bus Route
Tripper Service
Timepoint—Look for the matching symbol in the timetable section.
Metrolink Station
Point of interest
Medical Center
Transfer Point
Connecting Route(s)

FREQUENCY

WKDY	SAT	SUN
30/60	60	60

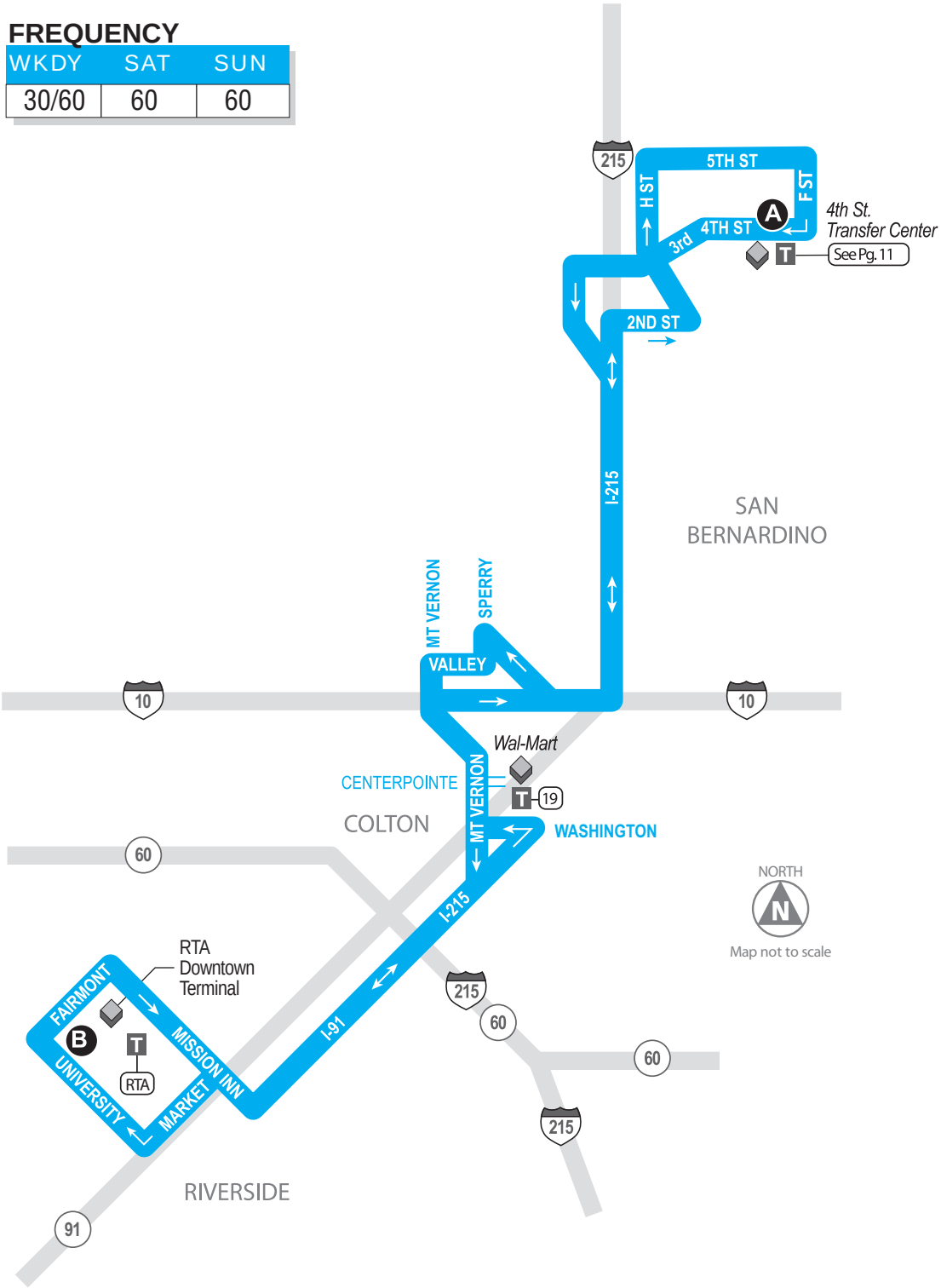

ROUTE 215: MONDAY – FRIDAY

NORTHBOUND		SOUTHBOUND	
B Riverside Transcenter	A 4th & F	A 4th & F	B Riverside Transcenter
		5:05	5:30
		5:35	6:00
5:35	6:00	6:05	6:30
		6:25	6:50
6:05	6:30	6:45	7:10
6:35	7:00	7:05	7:30
6:55	7:20	7:25	7:50
7:12	7:37	7:40	8:05
7:35	8:00	8:05	8:30
7:55	8:20		
8:08	8:33	8:35	9:00
8:35	9:00	9:05	9:30
9:05	9:30	9:35	10:00
9:35	10:00	10:05	10:30
10:05	10:30	10:35	11:00
10:35	11:00	11:05	11:30
11:05	11:30	11:35	**12:00**
11:35	**12:00**	**12:05**	**12:30**
12:05	**12:30**	**12:35**	**1:00**
12:35	**1:00**	**1:05**	**1:30**
1:05	**1:30**	**1:35**	**2:00**
1:35	**2:00**	**2:05**	**2:50**
2:05	**2:50**	**3:05**	**3:45**
		3:40	**4:20**
3:05	**3:50**	**4:05**	**4:45**
		4:25	**5:05**
4:05	**4:45**	**5:05**	**5:45**
4:35	**5:15**	**5:30**	**6:10**
5:05	**5:45**	**5:50**	**6:30**
5:20	**6:00**	**6:05**	**6:45**
6:05	**6:45**	**7:05**	**7:30**
6:35	**7:15**		
6:55	**7:20**	**7:35**	**8:00**
7:35	**8:00**	**8:05**	**8:30**
8:05	**8:30**	**8:35**	**9:00**
8:35	**9:00**	**9:05**	**9:30**
9:05	**9:30**		
9:35	**10:00**		

Note: Due to road construction and traffic, Route 215 may experience delays beyond our control.

Transit Tip

Respect the cone zone! For safety reasons, Omnitrans buses can't stop in construction zones. Please use the bus stops just in front of or behind the construction zone when using the bus.

ROUTE 215: SATURDAY

B	A	A	B
Riverside Transcenter	4th & F	4th & F	Riverside Transcenter
NORTHBOUND		**SOUTHBOUND**	
		6:35	7:00
7:05	7:30	7:35	8:00
8:05	8:30	8:35	9:00
9:05	9:30	9:35	10:00
10:05	10:30	10:35	11:00
11:05	11:30	11:35	**12:00**
12:05	**12:30**	**12:35**	**1:00**
1:05	**1:30**	**1:35**	**2:00**
2:05	**2:30**	**2:35**	**3:00**
3:05	**3:30**	**3:35**	**4:00**
4:05	**4:30**	**4:35**	**5:00**
5:05	**5:30**	**5:35**	**6:00**
6:05	**6:30**	**6:35**	**7:00**
7:05	**7:30**	**7:35**	**8:00**
8:05	**8:30**	**8:35**	**9:00**
9:05	**9:30**	**9:35**	**10:00**

ROUTE 215: SUNDAY

B	A	A	B
Riverside Transcenter	4th & F	4th & F	Riverside Transcenter
NORTHBOUND		**SOUTHBOUND**	
7:05	7:30	7:35	8:00
8:05	8:30	8:35	9:00
9:05	9:30	9:35	10:00
10:05	10:30	10:35	11:00
11:05	11:30	11:35	**12:00**
12:05	**12:30**	**12:35**	**1:00**
1:05	**1:30**	**1:35**	**2:00**
2:05	**2:30**	**2:35**	**3:00**
3:05	**3:30**	**3:35**	**4:00**
4:05	**4:30**	**4:35**	**5:00**
5:05	**5:30**	**5:35**	**6:00**
6:05	**6:30**	**6:35**	**7:00**

Note: Due to road construction and traffic, Route 215 may experience delys beyond our control.

No wheelies!
Buses often have to stop quickly.
For your own safety, please
place skateboards, roller blades
and scooters under your seat with
the wheels facing up.

MARTA BIG BEAR VALLEY (OFF THE MOUNTAIN)

OFF THE MOUNTAIN

Zone (Zonas)	
1	Big Bear - Fawnskin
2	Fawnskin - Snow Valley
3	Snow Valley - Running Springs
4	Running Springs - San Bernardino

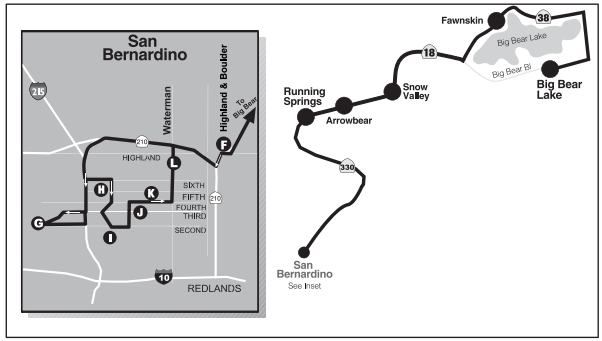

*Monday-Saturday**					Big Bear Valley to San Bernardino						DOWNHILL
Interlaken Shopping Center	Fawnskin	Snow Valley	Arrowbear	Running Springs	Highland & Boulder (F)	Metrolink* (G)	Greyhound* (H)	2nd & G St* (I)	E & Court St* (J)	Transit Mall* (K)	Highland & Waterman (L)
6:30	6:40	7:00	7:08	7:10	7:30	7:45	7:50	7:53	7:55	8:00	Request
11:00	11:10	11:30	11:38	11:40	12:00	12:15	12:20	12:23	12:25	12:30	Request
3:30	3:40	4:00	4:08	4:10	4:30	4:45	4:50	4:53	4:55	5:00	Request

***Drop off only**

*Monday-Saturday**					San Bernardino to Big Bear Valley						UPHILL
Transit Mall*	E & Court St*	2nd & F St*	Greyhound*	Metrolink*	Highland & Waterman	Highland & Boulder	Running Springs	Arrowbear	Snow Valley	Fawnskin	Interlaken Shopping Center
8:30	8:34	8:37	8:40	8:45	Request	9:05	9:25	9:28	9:35	9:54	10:00
1:00	1:04	1:07	1:10	1:15	Request	1:35	1:55	1:58	2:05	2:24	2:30
5:30	5:34	5:37	5:40	5:45	Request	6:05	6:25	6:28	6:35	6:54	7:00†

***Pickup only**

†The **7:00 p.m.** bus will drop passengers beyond Interlaken Shopping Center upon request. Appropriate Dial-a-Ride fare applies.

*Mid-day trip does not operate on Saturday (see gray shaded area).

MARTA RIM AREA/LAKE ARROWHEAD (OFF THE MOUNTAIN)

OFF THE MOUNTAIN

Zone (Zonas)	
1	Lake Arrowhead - Rim Forest
2	Rim Forest - Top Town
3	Top Town - San Bernardino

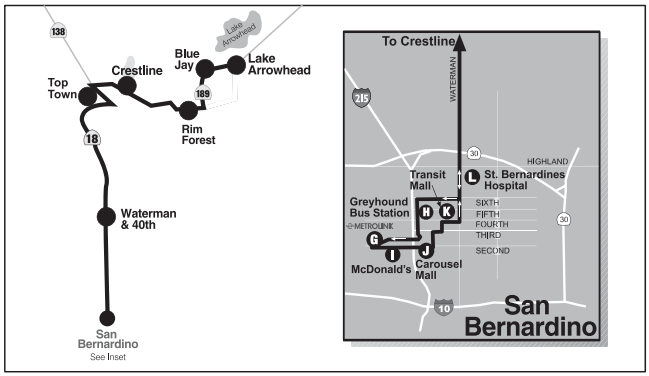

Monday - Saturday +					Lake Arrowhead to San Bernardino						DOWNHILL
Lake Arrowhead	Blue Jay	Rim Forest	Goodwin's Market	Top Town	Waterman & 40th St.	Metrolink* G	Greyhound* H	2nd & G St* I	E & Court St* J	Transit Mall* K	Highland & Waterman L
5:30	5:35	5:42	5:50	5:55	6:09	6:19	6:24	6:27	6:30	6:34	Request
8:45	8:50	8:57	9:05	9:10	9:24	9:34	9:39	9:42	9:45	9:49	Request
2:45	2:50	2:57	3:05	3:10	3:24	3:34	3:39	3:42	3:45	3:49	Request
5:45	5:50	5:57	6:05	6:10	6:24	6:34	6:39	6:42	6:45	6:49	Request

***Drop off only**

Monday - Saturday +					San Bernardino to Lake Arrowhead						UPHILL
Transit Mall*	E & Court St*	2nd & F St*	Greyhound*	Metrolink*	Highland & Waterman	Waterman & 40th St	Top Town	Goodwin's Market	Rim Forest	Blue Jay	Lake Arrowhead
7:15	7:19	7:22	7:25	7:30	Request	7:40	7:55	8:00	8:05	8:15	8:20
10:15	10:19	10:22	10:25	10:30	Request	10:40	10:55	11:00	11:05	11:15	11:20
4:15	4:19	4:22	4:25	4:30	Request	4:40	4:55	5:00	5:05	5:15	5:20
7:00	7:04	7:07	7:10	7:20	Request	7:30	7:45	7:50	7:55	8:05	8:10

***Pickup only**

+ First A.M. and last P.M. trips do no operate on Saturday (see gray shaded area).

APPENDIX D: LEVEL OF SERVICE CALCULATION WORKSHEETS

EXISTING CONDITIONS

AM PEAK HOUR

Movement	EBL	EBT	EBR	WBL	WBT	WBR	NBL	NBT	NBR	SBL	SBT	SBR
Lane Configurations												
Sign Control		Free			Free			Stop			Stop	
Grade		0%			0%			0%			0%	
Volume (veh/h)	1	50	1	31	71	1	8	9	14	0	0	0
Peak Hour Factor	0.90	0.90	0.90	0.90	0.90	0.90	0.90	0.90	0.90	0.90	0.90	0.90
Hourly flow rate (vph)	1	56	1	34	79	1	9	10	16	0	0	0
Pedestrians												
Lane Width (ft)												
Walking Speed (ft/s)												
Percent Blockage												
Right turn flare (veh)												
Median type								None			None	
Median storage veh)												
Upstream signal (ft)												
pX, platoon unblocked												
vC, conflicting volume	80			57			206	207	28	199	207	79
vC1, stage 1 conf vol												
vC2, stage 2 conf vol												
vCu, unblocked vol	80			57			206	207	28	199	207	79
tC, single (s)	4.1			4.1			7.5	6.5	6.9	7.5	6.5	6.9
tC, 2 stage (s)												
tF (s)	2.2			2.2			3.5	4.0	3.3	3.5	4.0	3.3
p0 queue free %	100			98			99	99	99	100	100	100
cM capacity (veh/h)	1531			1561			726	678	1048	715	677	971

Direction, Lane #	EB 1	EB 2	EB 3	WB 1	NB 1
Volume Total	20	37	1	114	34
Volume Left	1	0	0	34	9
Volume Right	0	0	1	1	16
cSH	1531	1700	1700	1561	823
Volume to Capacity	0.00	0.02	0.00	0.02	0.04
Queue Length 95th (ft)	0	0	0	2	3
Control Delay (s)	0.4	0.0	0.0	2.3	9.6
Lane LOS	A			A	A
Approach Delay (s)	0.1			2.3	9.6
Approach LOS					A

Intersection Summary			
Average Delay	2.9		
Intersection Capacity Utilization	22.5%	ICU Level of Service	A
Analysis Period (min)	15		

Existing AM Peak Hour
City of San Bernardino
Redlands First Mile

Level Of Service Computation Report
2000 HCM 4-Way Stop Method (Base Volume Alternative)

Intersection #2 K St and 2nd St

Cycle (sec):	100	Critical Vol./Cap.(X):	0.200
Loss Time (sec):	0 (Y+R=4.0 sec)	Average Delay (sec/veh):	8.5
Optimal Cycle:	0	Level Of Service:	A

Street Name:	K St						2nd St					
Approach:	North Bound			South Bound			East Bound			West Bound		
Movement:	L - T - R			L - T - R			L - T - R			L - T - R		
Control:	Stop Sign			Stop Sign			Stop Sign			Stop Sign		
Rights:	Include			Include			Include			Include		
Min. Green:	0	0	0	0	0	0	0	0	0	0	0	0
Lanes:	0 0	1! 0	0	0 0	1! 0	0	1 0	1 1	0	1 0	1 1	0
Volume Module:												
Base Vol:	16	3	41	8	25	12	8	258	13	39	128	21
Growth Adj:	1.00	1.00	1.00	1.00	1.00	1.00	1.00	1.00	1.00	1.00	1.00	1.00
Initial Bse:	16	3	41	8	25	12	8	258	13	39	128	21
User Adj:	1.00	1.00	1.00	1.00	1.00	1.00	1.00	1.00	1.00	1.00	1.00	1.00
PHF Adj:	0.94	0.94	0.94	0.94	0.94	0.94	0.94	0.94	0.94	0.94	0.94	0.94
PHF Volume:	17	3	44	9	27	13	9	274	14	41	136	22
Reduct Vol:	0	0	0	0	0	0	0	0	0	0	0	0
Reduced Vol:	17	3	44	9	27	13	9	274	14	41	136	22
PCE Adj:	1.00	1.00	1.00	1.00	1.00	1.00	1.00	1.00	1.00	1.00	1.00	1.00
MLF Adj:	1.00	1.00	1.00	1.00	1.00	1.00	1.00	1.00	1.00	1.00	1.00	1.00
FinalVolume:	17	3	44	9	27	13	9	274	14	41	136	22
Saturation Flow Module:												
Adjustment:	1.00	1.00	1.00	1.00	1.00	1.00	1.00	1.00	1.00	1.00	1.00	1.00
Lanes:	0.27	0.05	0.68	0.18	0.55	0.27	1.00	1.90	0.10	1.00	1.72	0.28
Final Sat.:	190	36	488	121	377	181	650	1369	69	637	1222	205
Capacity Analysis Module:												
Vol/Sat:	0.09	0.09	0.09	0.07	0.07	0.07	0.01	0.20	0.20	0.07	0.11	0.11
Crit Moves:		****		****				****			****	
Delay/Veh:	8.1	8.1	8.1	8.3	8.3	8.3	8.2	8.8	8.8	8.6	8.2	8.1
Delay Adj:	1.00	1.00	1.00	1.00	1.00	1.00	1.00	1.00	1.00	1.00	1.00	1.00
AdjDel/Veh:	8.1	8.1	8.1	8.3	8.3	8.3	8.2	8.8	8.8	8.6	8.2	8.1
LOS by Move:	A	A	A	A	A	A	A	A	A	A	A	A
ApproachDel:	8.1			8.3			8.8			8.3		
Delay Adj:	1.00			1.00			1.00			1.00		
ApprAdjDel:	8.1			8.3			8.8			8.3		
LOS by Appr:	A			A			A			A		
AllWayAvgQ:	0.1	0.1	0.1	0.1	0.1	0.1	0.0	0.2	0.2	0.1	0.1	0.1

Note: Queue reported is the number of cars per lane.

Movement	EBL	EBT	EBR	WBL	WBT	WBR	NBL	NBT	NBR	SBL	SBT	SBR
Lane Configurations												
Ideal Flow (vphpl)	1800	1800	1800	1800	1800	1800	1800	1800	1800	1800	1800	1800
Total Lost time (s)		4.0			4.0			4.0	4.0		4.0	4.0
Lane Util. Factor		*1.00			*1.00			1.00	1.00		1.00	1.00
Frt		1.00			1.00			1.00	1.00		1.00	1.00
Flt Protected		1.00			1.00			1.00	1.00		1.00	1.00
Satd. Flow (prot)		3600			3598			1800	1800		1800	1800
Flt Permitted		1.00			1.00			1.00	1.00		1.00	1.00
Satd. Flow (perm)		3600			3598			1800	1800		1800	1800
Volume (vph)	11	423	35	115	190	1	36	21	124	3	30	23
Peak-hour factor, PHF	0.86	0.86	0.86	0.86	0.86	0.86	0.86	0.86	0.86	0.86	0.86	0.86
Adj. Flow (vph)	13	492	41	134	221	1	42	24	144	3	35	27
RTOR Reduction (vph)	0	8	0	0	0	0	0	0	106	0	0	21
Lane Group Flow (vph)	0	538	0	0	356	0	0	66	38	0	38	6
Turn Type	Perm			Perm			Split		Perm	Split		Perm
Protected Phases		4			8		2	2		6	6	
Permitted Phases	4			8					2			6
Actuated Green, G (s)		27.0			27.0			20.0	20.0		16.0	16.0
Effective Green, g (s)		27.0			27.0			20.0	20.0		16.0	16.0
Actuated g/C Ratio		0.36			0.36			0.27	0.27		0.21	0.21
Clearance Time (s)		4.0			4.0			4.0	4.0		4.0	4.0
Lane Grp Cap (vph)		1296			1295			480	480		384	384
v/s Ratio Prot								c0.04			c0.02	
v/s Ratio Perm		0.15			0.10				0.02			0.00
v/c Ratio		0.41			0.27			0.14	0.08		0.10	0.02
Uniform Delay, d1		18.1			17.0			20.9	20.6		23.7	23.3
Progression Factor		1.00			0.89			1.00	1.00		1.00	1.00
Incremental Delay, d2		1.0			0.5			0.6	0.3		0.5	0.1
Delay (s)		19.0			15.8			21.5	20.9		24.2	23.4
Level of Service		B			B			C	C		C	C
Approach Delay (s)		19.0			15.8			21.1			23.9	
Approach LOS		B			B			C			C	

Intersection Summary			
HCM Average Control Delay	18.7	HCM Level of Service	B
HCM Volume to Capacity ratio	0.25		
Actuated Cycle Length (s)	75.0	Sum of lost time (s)	12.0
Intersection Capacity Utilization	42.9%	ICU Level of Service	A
Analysis Period (min)	15		

c Critical Lane Group

Movement	EBT	EBR	WBL	WBT	NBL	NBR
Lane Configurations						
Sign Control	Free			Free	Stop	
Grade	0%			0%	0%	
Volume (veh/h)	69	0	4	112	4	5
Peak Hour Factor	0.87	0.87	0.87	0.87	0.87	0.87
Hourly flow rate (vph)	79	0	5	129	5	6
Pedestrians						
Lane Width (ft)						
Walking Speed (ft/s)						
Percent Blockage						
Right turn flare (veh)						
Median type					None	
Median storage veh)						
Upstream signal (ft)				682		
pX, platoon unblocked						
vC, conflicting volume			79		153	40
vC1, stage 1 conf vol						
vC2, stage 2 conf vol						
vCu, unblocked vol			79		153	40
tC, single (s)			4.1		6.8	6.9
tC, 2 stage (s)						
tF (s)			2.2		3.5	3.3
p0 queue free %			100		99	99
cM capacity (veh/h)			1532		827	1030

Direction, Lane #	EB 1	EB 2	WB 1	WB 2	NB 1
Volume Total	53	26	48	86	10
Volume Left	0	0	5	0	5
Volume Right	0	0	0	0	6
cSH	1700	1700	1532	1700	928
Volume to Capacity	0.03	0.02	0.00	0.05	0.01
Queue Length 95th (ft)	0	0	0	0	1
Control Delay (s)	0.0	0.0	0.7	0.0	8.9
Lane LOS			A		A
Approach Delay (s)	0.0		0.3		8.9
Approach LOS					A

Intersection Summary			
Average Delay	0.6		
Intersection Capacity Utilization	16.3%	ICU Level of Service	A
Analysis Period (min)	15		

Existing AM Peak Hour
City of San Bernardino
Redlands First Mile

Level Of Service Computation Report
2000 HCM Unsignalized Method (Base Volume Alternative)

Intersection #5 J St and 2nd St

Average Delay (sec/veh): 1.1 Worst Case Level Of Service: B[13.5]

Street Name:	J St						2nd St					
Approach:	North Bound			South Bound			East Bound			West Bound		
Movement:	L	T	R	L	T	R	L	T	R	L	T	R
Control:	Stop Sign			Stop Sign			Uncontrolled			Uncontrolled		
Rights:	Include			Include			Include			Include		
Lanes:	0 0 1! 0 0			0 1 0 0 0			1 0 1 1 0			1 0 1 1 0		
Volume Module:												
Base Vol:	2	5	55	3	1	0	3	414	5	8	193	9
Growth Adj:	1.00	1.00	1.00	1.00	1.00	1.00	1.00	1.00	1.00	1.00	1.00	1.00
Initial Bse:	2	5	55	3	1	0	3	414	5	8	193	9
User Adj:	1.00	1.00	1.00	1.00	1.00	1.00	1.00	1.00	1.00	1.00	1.00	1.00
PHF Adj:	0.95	0.95	0.95	0.95	0.95	0.95	0.95	0.95	0.95	0.95	0.95	0.95
PHF Volume:	2	5	58	3	1	0	3	436	5	8	203	9
Reduct Vol:	0	0	0	0	0	0	0	0	0	0	0	0
FinalVolume:	2	5	58	3	1	0	3	436	5	8	203	9
Critical Gap Module:												
Critical Gp:	7.5	6.5	6.9	7.5	6.5	xxxxx	4.1	xxxx	xxxxx	4.1	xxxx	xxxxx
FollowUpTim:	3.5	4.0	3.3	3.5	4.0	xxxxx	2.2	xxxx	xxxxx	2.2	xxxx	xxxxx
Capacity Module:												
Cnflict Vol:	564	674	221	452	672	xxxxx	213	xxxx	xxxxx	441	xxxx	xxxxx
Potent Cap.:	413	379	790	496	380	xxxxx	1370	xxxx	xxxxx	1130	xxxx	xxxxx
Move Cap.:	409	375	790	451	376	xxxxx	1370	xxxx	xxxxx	1130	xxxx	xxxxx
Volume/Cap:	0.01	0.01	0.07	0.01	0.00	xxxx	0.00	xxxx	xxxx	0.01	xxxx	xxxx
Level Of Service Module:												
2Way95thQ:	xxxx	xxxx	xxxxx	xxxx	xxxx	xxxxx	0.0	xxxx	xxxxx	0.0	xxxx	xxxxx
Control Del:	xxxxx	xxxx	xxxxx	xxxxx	xxxx	xxxxx	7.6	xxxx	xxxxx	8.2	xxxx	xxxxx
LOS by Move:	*	*	*	*	*	*	A	*	*	A	*	*
Movement:	LT	LTR	RT	LT	LTR	RT	LT	LTR	RT	LT	LTR	RT
Shared Cap.:	xxxx	705	xxxxx	430	xxxx	xxxxx	xxxx	xxxx	xxxxx	xxxx	xxxx	xxxxx
SharedQueue:	xxxxx	0.3	xxxxx	0.0	xxxx	xxxxx	xxxxx	xxxx	xxxxx	xxxxx	xxxx	xxxxx
Shrd ConDel:	xxxxx	10.6	xxxxx	13.5	xxxx	xxxxx	xxxxx	xxxx	xxxxx	xxxxx	xxxx	xxxxx
Shared LOS:	*	B	*	B	*	*	*	*	*	*	*	*
ApproachDel:	10.6			13.5			xxxxxx			xxxxxx		
ApproachLOS:	B			B			*			*		

Note: Queue reported is the number of cars per lane.

Movement	EBL	EBT	EBR	WBL	WBT	WBR	NBL	NBT	NBR	SBL	SBT	SBR
Lane Configurations												
Sign Control		Free			Free			Stop			Stop	
Grade		0%			0%			0%			0%	
Volume (veh/h)	49	498	2	31	247	9	0	6	2	4	4	4
Peak Hour Factor	0.88	0.88	0.88	0.88	0.88	0.88	0.88	0.88	0.88	0.88	0.88	0.88
Hourly flow rate (vph)	56	566	2	35	281	10	0	7	2	5	5	5
Pedestrians												
Lane Width (ft)												
Walking Speed (ft/s)												
Percent Blockage												
Right turn flare (veh)												
Median type								None			None	
Median storage veh)												
Upstream signal (ft)		704			682							
pX, platoon unblocked				0.94			0.94	0.94	0.94	0.94	0.94	
vC, conflicting volume	291			568			896	1040	284	756	1036	145
vC1, stage 1 conf vol												
vC2, stage 2 conf vol												
vCu, unblocked vol	291			482			829	982	181	681	978	145
tC, single (s)	4.1			4.1			7.5	6.5	6.9	7.5	6.5	6.9
tC, 2 stage (s)												
tF (s)	2.2			2.2			3.5	4.0	3.3	3.5	4.0	3.3
p0 queue free %	96			97			100	97	100	98	98	99
cM capacity (veh/h)	1282			1029			232	219	790	294	220	882

Direction, Lane #	EB 1	EB 2	WB 1	WB 2	NB 1	SB 1
Volume Total	339	285	176	151	9	14
Volume Left	56	0	35	0	0	5
Volume Right	0	2	0	10	2	5
cSH	1282	1700	1029	1700	267	330
Volume to Capacity	0.04	0.17	0.03	0.09	0.03	0.04
Queue Length 95th (ft)	3	0	3	0	3	3
Control Delay (s)	1.7	0.0	2.0	0.0	19.0	16.4
Lane LOS	A		A		C	C
Approach Delay (s)	0.9		1.1		19.0	16.4
Approach LOS					C	C

Intersection Summary			
Average Delay	1.3		
Intersection Capacity Utilization	39.0%	ICU Level of Service	A
Analysis Period (min)	15		

Movement	EBL	EBT	EBR	WBL	WBT	WBR	NBL	NBT	NBR	SBL	SBT	SBR
Lane Configurations												
Ideal Flow (vphpl)	1800	1800	1800	1800	1800	1800	1700	1800	1800	1700	1800	1800
Total Lost time (s)		4.0			4.0		4.0	4.0		4.0	4.0	
Lane Util. Factor		*1.00			*1.00		1.00	1.00		1.00	*1.00	
Frt		1.00			1.00		1.00	1.00		1.00	1.00	
Flt Protected		1.00			1.00		1.00	1.00		1.00	1.00	
Satd. Flow (prot)		3600			3600		1700	1800		1700	3600	
Flt Permitted		1.00			1.00		1.00	1.00		1.00	1.00	
Satd. Flow (perm)		3600			3600		1700	1800		1700	3600	
Volume (vph)	0	49	4	38	45	0	11	3	33	169	415	61
Peak-hour factor, PHF	0.96	0.96	0.96	0.96	0.96	0.96	0.96	0.96	0.96	0.96	0.96	0.96
Adj. Flow (vph)	0	51	4	40	47	0	11	3	34	176	432	64
RTOR Reduction (vph)	0	2	0	0	0	0	0	17	0	0	17	0
Lane Group Flow (vph)	0	53	0	0	87	0	11	20	0	176	479	0
Turn Type	Perm			Perm			Perm			Perm		
Protected Phases		4			8			2			6	
Permitted Phases	4			8			2			6		
Actuated Green, G (s)		29.0			29.0		38.0	38.0		38.0	38.0	
Effective Green, g (s)		29.0			29.0		38.0	38.0		38.0	38.0	
Actuated g/C Ratio		0.39			0.39		0.51	0.51		0.51	0.51	
Clearance Time (s)		4.0			4.0		4.0	4.0		4.0	4.0	
Lane Grp Cap (vph)		1392			1392		861	912		861	1824	
v/s Ratio Prot		0.01						0.01			c0.13	
v/s Ratio Perm					0.02		0.01			0.10		
v/c Ratio		0.04			0.06		0.01	0.02		0.20	0.26	
Uniform Delay, d1		14.3			14.5		9.2	9.2		10.2	10.5	
Progression Factor		1.00			0.67		0.92	1.10		1.00	1.00	
Incremental Delay, d2		0.1			0.1		0.0	0.0		0.5	0.4	
Delay (s)		14.4			9.7		8.5	10.2		10.7	10.9	
Level of Service		B			A		A	B		B	B	
Approach Delay (s)		14.4			9.7			9.8			10.8	
Approach LOS		B			A			A			B	

Intersection Summary			
HCM Average Control Delay	10.9	HCM Level of Service	B
HCM Volume to Capacity ratio	0.18		
Actuated Cycle Length (s)	75.0	Sum of lost time (s)	8.0
Intersection Capacity Utilization	32.7%	ICU Level of Service	A
Analysis Period (min)	15		

c Critical Lane Group

Movement	EBL	EBT	EBR	WBL	WBT	WBR	NBL	NBT	NBR	SBL	SBT	SBR
Lane Configurations												
Ideal Flow (vphpl)	1700	1800	1800	1700	1800	1800	1800	1800	1800	1800	1800	1800
Total Lost time (s)	4.0	4.0		4.0	4.0			4.0	4.0		4.0	
Lane Util. Factor	1.00	*1.00		1.00	*1.00			*1.00	1.00		*1.00	
Frt	1.00	1.00		1.00	1.00			1.00	1.00		1.00	
Flt Protected	1.00	1.00		1.00	1.00			1.00	1.00		1.00	
Satd. Flow (prot)	1700	3600		1700	3600			3600	1800		3600	
Flt Permitted	1.00	1.00		1.00	1.00			1.00	1.00		1.00	
Satd. Flow (perm)	1700	3600		1700	3600			3600	1800		3600	
Volume (vph)	5	327	4	39	170	13	4	17	134	119	292	18
Peak-hour factor, PHF	0.94	0.94	0.94	0.94	0.94	0.94	0.94	0.94	0.94	0.94	0.94	0.94
Adj. Flow (vph)	5	348	4	41	181	14	4	18	143	127	311	19
RTOR Reduction (vph)	0	1	0	0	8	0	0	0	78	0	4	0
Lane Group Flow (vph)	5	351	0	41	187	0	0	22	65	0	453	0
Turn Type	Perm			Perm			Perm		Perm	Perm		
Protected Phases		4			8			2			6	
Permitted Phases	4			8			2		2	6		
Actuated Green, G (s)	33.0	33.0		33.0	33.0			34.0	34.0		34.0	
Effective Green, g (s)	33.0	33.0		33.0	33.0			34.0	34.0		34.0	
Actuated g/C Ratio	0.44	0.44		0.44	0.44			0.45	0.45		0.45	
Clearance Time (s)	4.0	4.0		4.0	4.0			4.0	4.0		4.0	
Lane Grp Cap (vph)	748	1584		748	1584			1632	816		1632	
v/s Ratio Prot		c0.10			0.05							
v/s Ratio Perm	0.00			0.02				0.01	0.04		0.13	
v/c Ratio	0.01	0.22		0.05	0.12			0.01	0.08		0.28	
Uniform Delay, d1	11.8	13.0		12.1	12.4			11.3	11.6		12.8	
Progression Factor	1.00	1.00		1.00	1.00			1.13	2.84		0.71	
Incremental Delay, d2	0.0	0.3		0.1	0.2			0.0	0.2		0.4	
Delay (s)	11.8	13.4		12.2	12.6			12.8	33.2		9.6	
Level of Service	B	B		B	B			B	C		A	
Approach Delay (s)		13.3			12.5			30.4			9.6	
Approach LOS		B			B			C			A	

Intersection Summary			
HCM Average Control Delay	14.1	HCM Level of Service	B
HCM Volume to Capacity ratio	0.25		
Actuated Cycle Length (s)	75.0	Sum of lost time (s)	8.0
Intersection Capacity Utilization	41.2%	ICU Level of Service	A
Analysis Period (min)	15		

c Critical Lane Group

Movement	EBL	EBT	EBR	WBL	WBT	WBR	NBL	NBT	NBR	SBL	SBT	SBR
Lane Configurations												
Ideal Flow (vphpl)	1800	1800	1800	1800	1800	1800	1800	1800	1800	1800	1800	1800
Total Lost time (s)		4.0			4.0			4.0			4.0	
Lane Util. Factor		*1.00			*1.00			*1.00			*1.00	
Frt		1.00			1.00			1.00			1.00	
Flt Protected		1.00			1.00			1.00			1.00	
Satd. Flow (prot)		3600			3600			3600			3600	
Flt Permitted		1.00			1.00			1.00			1.00	
Satd. Flow (perm)		3600			3600			3600			3600	
Volume (vph)	86	433	20	40	214	17	8	65	66	125	126	99
Peak-hour factor, PHF	0.89	0.89	0.89	0.89	0.89	0.89	0.89	0.89	0.89	0.89	0.89	0.89
Adj. Flow (vph)	97	487	22	45	240	19	9	73	74	140	142	111
RTOR Reduction (vph)	0	4	0	0	7	0	0	44	0	0	62	0
Lane Group Flow (vph)	0	602	0	0	297	0	0	112	0	0	331	0
Turn Type	Perm			Perm			Perm			Perm		
Protected Phases		4			8			2			6	
Permitted Phases	4			8			2			6		
Actuated Green, G (s)		37.0			37.0			30.0			30.0	
Effective Green, g (s)		37.0			37.0			30.0			30.0	
Actuated g/C Ratio		0.49			0.49			0.40			0.40	
Clearance Time (s)		4.0			4.0			4.0			4.0	
Lane Grp Cap (vph)		1776			1776			1440			1440	
v/s Ratio Prot												
v/s Ratio Perm		0.17			0.08			0.03			0.09	
v/c Ratio		0.34			0.17			0.08			0.23	
Uniform Delay, d1		11.6			10.5			13.9			14.9	
Progression Factor		2.21			0.62			1.00			1.85	
Incremental Delay, d2		0.5			0.2			0.1			0.4	
Delay (s)		26.1			6.7			14.0			27.9	
Level of Service		C			A			B			C	
Approach Delay (s)		26.1			6.7			14.0			27.9	
Approach LOS		C			A			B			C	

Intersection Summary			
HCM Average Control Delay	21.2	HCM Level of Service	C
HCM Volume to Capacity ratio	0.29		
Actuated Cycle Length (s)	75.0	Sum of lost time (s)	8.0
Intersection Capacity Utilization	52.6%	ICU Level of Service	A
Analysis Period (min)	15		

c Critical Lane Group

Movement	EBT	EBR	WBL	WBT	NBL	NBR
Lane Configurations						
Ideal Flow (vphpl)	1800	1800	1600	1800	1800	1800
Total Lost time (s)	4.0	4.0	4.0	4.0		
Lane Util. Factor	*1.00	1.00	*1.00	1.00		
Frt	1.00	1.00	1.00	1.00		
Flt Protected	1.00	1.00	1.00	1.00		
Satd. Flow (prot)	3600	1800	3200	1800		
Flt Permitted	1.00	1.00	1.00	1.00		
Satd. Flow (perm)	3600	1800	3200	1800		
Volume (vph)	449	172	211	234	0	0
Peak-hour factor, PHF	0.95	0.95	0.95	0.95	0.95	0.95
Adj. Flow (vph)	473	181	222	246	0	0
RTOR Reduction (vph)	0	94	0	0	0	0
Lane Group Flow (vph)	473	87	222	246	0	0
Turn Type		Perm	Prot			
Protected Phases	4		3	8		
Permitted Phases		4				
Actuated Green, G (s)	36.0	36.0	31.0	75.0		
Effective Green, g (s)	36.0	36.0	31.0	75.0		
Actuated g/C Ratio	0.48	0.48	0.41	1.00		
Clearance Time (s)	4.0	4.0	4.0	4.0		
Lane Grp Cap (vph)	1728	864	1323	1800		
v/s Ratio Prot	c0.13		c0.07	0.14		
v/s Ratio Perm		0.05				
v/c Ratio	0.27	0.10	0.17	0.14		
Uniform Delay, d1	11.7	10.7	13.9	0.0		
Progression Factor	0.79	0.84	1.00	1.00		
Incremental Delay, d2	0.4	0.2	0.3	0.2		
Delay (s)	9.6	9.2	14.1	0.2		
Level of Service	A	A	B	A		
Approach Delay (s)	9.5			6.8	0.0	
Approach LOS	A			A	A	

Intersection Summary			
HCM Average Control Delay	8.3	HCM Level of Service	A
HCM Volume to Capacity ratio	0.22		
Actuated Cycle Length (s)	75.0	Sum of lost time (s)	8.0
Intersection Capacity Utilization	74.2%	ICU Level of Service	D
Analysis Period (min)	15		

c Critical Lane Group

Movement	EBL	EBT	EBR	WBL	WBT	WBR	NBL	NBT	NBR	SBL	SBT	SBR
Lane Configurations												
Ideal Flow (vphpl)	1700	1800	1800	1800	1800	1800	1800	1800	1700	1800	1800	1800
Total Lost time (s)	4.0	4.0			4.0	4.0		4.0	4.0			
Lane Util. Factor	1.00	*1.00			*1.00	1.00		1.00	*1.00			
Frt	1.00	1.00			1.00	1.00		1.00	1.00			
Flt Protected	1.00	1.00			1.00	1.00		1.00	1.00			
Satd. Flow (prot)	1700	3600			5400	1800		1800	3400			
Flt Permitted	1.00	1.00			1.00	1.00		1.00	1.00			
Satd. Flow (perm)	1700	3600			5400	1800		1800	3400			
Volume (vph)	246	209	0	0	291	182	193	0	1154	0	0	0
Peak-hour factor, PHF	0.92	0.92	0.92	0.92	0.92	0.92	0.92	0.92	0.92	0.92	0.92	0.92
Adj. Flow (vph)	267	227	0	0	316	198	210	0	1254	0	0	0
RTOR Reduction (vph)	0	0	0	0	0	0	0	0	780	0	0	0
Lane Group Flow (vph)	267	227	0	0	316	198	0	210	474	0	0	0
Turn Type	Prot					Free	Split		Prot			
Protected Phases	7	4			8		2	2	2			
Permitted Phases						Free						
Actuated Green, G (s)	29.0	48.0			15.0	90.0		34.0	34.0			
Effective Green, g (s)	29.0	48.0			15.0	90.0		34.0	34.0			
Actuated g/C Ratio	0.32	0.53			0.17	1.00		0.38	0.38			
Clearance Time (s)	4.0	4.0			4.0			4.0	4.0			
Lane Grp Cap (vph)	548	1920			900	1800		680	1284			
v/s Ratio Prot	c0.16	0.06			c0.06			0.12	c0.14			
v/s Ratio Perm						0.11						
v/c Ratio	0.49	0.12			0.35	0.11		0.31	0.37			
Uniform Delay, d1	24.5	10.5			33.2	0.0		19.7	20.2			
Progression Factor	1.00	1.00			0.84	1.00		1.00	1.00			
Incremental Delay, d2	3.1	0.1			1.1	0.1		1.2	0.8			
Delay (s)	27.6	10.6			29.0	0.1		20.9	21.1			
Level of Service	C	B			C	A		C	C			
Approach Delay (s)		19.8			17.8			21.0			0.0	
Approach LOS		B			B			C			A	

Intersection Summary			
HCM Average Control Delay	20.1	HCM Level of Service	C
HCM Volume to Capacity ratio	0.41		
Actuated Cycle Length (s)	90.0	Sum of lost time (s)	12.0
Intersection Capacity Utilization	74.2%	ICU Level of Service	D
Analysis Period (min)	15		

c Critical Lane Group

Movement	EBL	EBT	EBR	WBL	WBT	WBR	NBL	NBT	NBR	SBL	SBT	SBR
Lane Configurations												
Ideal Flow (vphpl)	1700	1800	1800	1700	1800	1800	1700	1800	1800	1700	1800	1800
Total Lost time (s)	4.0	4.0		4.0	4.0			4.0		4.0	4.0	
Lane Util. Factor	1.00	*1.00		1.00	*1.00			*1.00		1.00	*1.00	
Frt	1.00	1.00		1.00	1.00			1.00		1.00	1.00	
Flt Protected	1.00	1.00		1.00	1.00			1.00		1.00	1.00	
Satd. Flow (prot)	1700	3600		1700	3600			3600		1700	3600	
Flt Permitted	1.00	1.00		1.00	1.00			1.00		1.00	1.00	
Satd. Flow (perm)	1700	3600		1700	3600			3600		1700	3600	
Volume (vph)	31	115	71	40	36	8	0	78	70	11	173	43
Peak-hour factor, PHF	0.81	0.81	0.81	0.81	0.81	0.81	0.81	0.81	0.81	0.81	0.81	0.81
Adj. Flow (vph)	38	142	88	49	44	10	0	96	86	14	214	53
RTOR Reduction (vph)	0	62	0	0	7	0	0	61	0	0	31	0
Lane Group Flow (vph)	38	168	0	49	47	0	0	121	0	14	236	0
Turn Type	Prot			Prot			Perm			Perm		
Protected Phases	5	2		1	6			8			4	
Permitted Phases							8			4		
Actuated Green, G (s)	19.0	22.0		19.0	22.0			22.0		22.0	22.0	
Effective Green, g (s)	19.0	22.0		19.0	22.0			22.0		22.0	22.0	
Actuated g/C Ratio	0.25	0.29		0.25	0.29			0.29		0.29	0.29	
Clearance Time (s)	4.0	4.0		4.0	4.0			4.0		4.0	4.0	
Lane Grp Cap (vph)	431	1056		431	1056			1056		499	1056	
v/s Ratio Prot	0.02	c0.05		c0.03	0.01			0.03			c0.07	
v/s Ratio Perm										0.01		
v/c Ratio	0.09	0.16		0.11	0.04			0.11		0.03	0.22	
Uniform Delay, d1	21.4	19.6		21.5	19.0			19.4		18.9	20.0	
Progression Factor	0.88	2.21		1.00	1.00			1.00		1.00	1.00	
Incremental Delay, d2	0.4	0.3		0.5	0.1			0.2		0.1	0.5	
Delay (s)	19.2	43.7		22.1	19.1			19.6		19.0	20.5	
Level of Service	B	D		C	B			B		B	C	
Approach Delay (s)		40.2			20.5			19.6			20.5	
Approach LOS		D			C			B			C	

Intersection Summary			
HCM Average Control Delay	26.6	HCM Level of Service	C
HCM Volume to Capacity ratio	0.17		
Actuated Cycle Length (s)	75.0	Sum of lost time (s)	12.0
Intersection Capacity Utilization	29.3%	ICU Level of Service	A
Analysis Period (min)	15		

c Critical Lane Group

Movement	EBL	EBT	EBR	WBL	WBT	WBR	NBL	NBT	NBR	SBL	SBT	SBR
Lane Configurations												
Ideal Flow (vphpl)	1700	1800	1800	1700	1800	1800	1700	1800	1800	1700	1800	1800
Total Lost time (s)	4.0	4.0		4.0	4.0		4.0	4.0		4.0	4.0	
Lane Util. Factor	1.00	*1.00		1.00	*1.00		1.00	*1.00		1.00	*1.00	
Frt	1.00	1.00		1.00	1.00		1.00	1.00		1.00	1.00	
Flt Protected	1.00	1.00		1.00	1.00		1.00	1.00		1.00	1.00	
Satd. Flow (prot)	1700	5400		1700	5400		1700	3600		1700	3600	
Flt Permitted	1.00	1.00		1.00	1.00		1.00	1.00		1.00	1.00	
Satd. Flow (perm)	1700	5400		1700	5400		1700	3600		1700	3600	
Volume (vph)	110	1025	111	27	277	32	95	81	30	89	137	42
Peak-hour factor, PHF	0.94	0.94	0.94	0.94	0.94	0.94	0.94	0.94	0.94	0.94	0.94	0.94
Adj. Flow (vph)	117	1090	118	29	295	34	101	86	32	95	146	45
RTOR Reduction (vph)	0	16	0	0	18	0	0	27	0	0	35	0
Lane Group Flow (vph)	117	1192	0	29	311	0	101	91	0	95	156	0
Turn Type	Prot			Prot			pm+pt			pm+pt		
Protected Phases	7	4		3	8		5	2		1	6	
Permitted Phases							2			6		
Actuated Green, G (s)	20.0	33.0		13.0	26.0		28.0	15.0		28.0	15.0	
Effective Green, g (s)	20.0	33.0		13.0	26.0		28.0	15.0		28.0	15.0	
Actuated g/C Ratio	0.22	0.37		0.14	0.29		0.31	0.17		0.31	0.17	
Clearance Time (s)	4.0	4.0		4.0	4.0		4.0	4.0		4.0	4.0	
Lane Grp Cap (vph)	378	1980		246	1560		604	600		604	600	
v/s Ratio Prot	c0.07	c0.22		0.02	0.06		c0.02	0.03		0.02	c0.04	
v/s Ratio Perm							0.04			0.03		
v/c Ratio	0.31	0.60		0.12	0.20		0.17	0.15		0.16	0.26	
Uniform Delay, d1	29.2	23.2		33.5	24.1		22.7	32.1		22.6	32.7	
Progression Factor	1.01	0.94		1.00	1.00		1.00	1.00		1.00	1.00	
Incremental Delay, d2	1.8	1.2		1.0	0.3		0.6	0.5		0.6	1.1	
Delay (s)	31.5	22.9		34.5	24.4		23.3	32.6		23.2	33.7	
Level of Service	C	C		C	C		C	C		C	C	
Approach Delay (s)		23.7			25.2			28.3			30.2	
Approach LOS		C			C			C			C	

Intersection Summary			
HCM Average Control Delay	25.2	HCM Level of Service	C
HCM Volume to Capacity ratio	0.41		
Actuated Cycle Length (s)	90.0	Sum of lost time (s)	16.0
Intersection Capacity Utilization	51.5%	ICU Level of Service	A
Analysis Period (min)	15		

c Critical Lane Group

Movement	EBL	EBT	EBR	WBL	WBT	WBR	NBL	NBT	NBR	SBL	SBT	SBR
Lane Configurations												
Ideal Flow (vphpl)	1700	1800	1800	1700	1800	1800	1700	1800	1800	1700	1800	1800
Total Lost time (s)	4.0	4.0		4.0	4.0		4.0	4.0		4.0	4.0	
Lane Util. Factor	1.00	*1.00		1.00	*1.00		1.00	*1.00		1.00	*1.00	
Frt	1.00	1.00		1.00	1.00		1.00	1.00		1.00	1.00	
Flt Protected	1.00	1.00		1.00	1.00		1.00	1.00		1.00	1.00	
Satd. Flow (prot)	1700	3600		1700	3600		1700	3600		1700	3600	
Flt Permitted	1.00	1.00		1.00	1.00		1.00	1.00		1.00	1.00	
Satd. Flow (perm)	1700	3600		1700	3600		1700	3600		1700	3600	
Volume (vph)	52	481	31	36	249	64	14	50	22	82	81	47
Peak-hour factor, PHF	0.79	0.79	0.79	0.79	0.79	0.79	0.79	0.79	0.79	0.79	0.79	0.79
Adj. Flow (vph)	66	609	39	46	315	81	18	63	28	104	103	59
RTOR Reduction (vph)	0	7	0	0	33	0	0	18	0	0	37	0
Lane Group Flow (vph)	66	641	0	46	363	0	18	73	0	104	125	0
Turn Type	Perm			Perm			Perm			Perm		
Protected Phases		4			8			2			6	
Permitted Phases	4			8			2			6		
Actuated Green, G (s)	39.0	39.0		39.0	39.0		28.0	28.0		28.0	28.0	
Effective Green, g (s)	39.0	39.0		39.0	39.0		28.0	28.0		28.0	28.0	
Actuated g/C Ratio	0.52	0.52		0.52	0.52		0.37	0.37		0.37	0.37	
Clearance Time (s)	4.0	4.0		4.0	4.0		4.0	4.0		4.0	4.0	
Lane Grp Cap (vph)	884	1872		884	1872		635	1344		635	1344	
v/s Ratio Prot		c0.18			0.10			0.02			0.03	
v/s Ratio Perm	0.04			0.03			0.01			c0.06		
v/c Ratio	0.07	0.34		0.05	0.19		0.03	0.05		0.16	0.09	
Uniform Delay, d1	9.0	10.5		8.9	9.6		14.9	15.0		15.7	15.3	
Progression Factor	1.42	1.27		0.97	1.03		1.00	1.00		1.00	1.00	
Incremental Delay, d2	0.2	0.5		0.1	0.2		0.1	0.1		0.6	0.1	
Delay (s)	12.9	13.8		8.7	10.1		15.0	15.1		16.2	15.4	
Level of Service	B	B		A	B		B	B		B	B	
Approach Delay (s)		13.7			10.0			15.1			15.7	
Approach LOS		B			A			B			B	

Intersection Summary			
HCM Average Control Delay	13.1	HCM Level of Service	B
HCM Volume to Capacity ratio	0.27		
Actuated Cycle Length (s)	75.0	Sum of lost time (s)	8.0
Intersection Capacity Utilization	40.2%	ICU Level of Service	A
Analysis Period (min)	15		

c Critical Lane Group

Movement	EBL	EBT	EBR	WBL	WBT	WBR	NBL	NBT	NBR	SBL	SBT	SBR
Lane Configurations												
Sign Control		Stop			Stop			Free			Free	
Grade		0%			0%			0%			0%	
Volume (veh/h)	5	0	3	0	0	0	0	104	0	0	209	3
Peak Hour Factor	0.88	0.88	0.88	0.88	0.88	0.88	0.88	0.88	0.88	0.88	0.88	0.88
Hourly flow rate (vph)	6	0	3	0	0	0	0	118	0	0	238	3
Pedestrians												
Lane Width (ft)												
Walking Speed (ft/s)												
Percent Blockage												
Right turn flare (veh)												
Median type		None			None							
Median storage veh)												
Upstream signal (ft)											932	
pX, platoon unblocked												
vC, conflicting volume	298	357	120	240	359	59	241			118		
vC1, stage 1 conf vol												
vC2, stage 2 conf vol												
vCu, unblocked vol	298	357	120	240	359	59	241			118		
tC, single (s)	7.5	6.5	6.9	7.5	6.5	6.9	4.1			4.1		
tC, 2 stage (s)												
tF (s)	3.5	4.0	3.3	3.5	4.0	3.3	2.2			2.2		
p0 queue free %	99	100	100	100	100	100	100			100		
cM capacity (veh/h)	636	572	915	696	571	1001	1338			1483		

Direction, Lane #	EB 1	WB 1	NB 1	NB 2	SB 1	SB 2
Volume Total	9	0	59	59	119	122
Volume Left	6	0	0	0	0	0
Volume Right	3	0	0	0	0	3
cSH	718	1700	1338	1700	1483	1700
Volume to Capacity	0.01	0.00	0.00	0.03	0.00	0.07
Queue Length 95th (ft)	1	0	0	0	0	0
Control Delay (s)	10.1	0.0	0.0	0.0	0.0	0.0
Lane LOS	B	A				
Approach Delay (s)	10.1	0.0	0.0		0.0	
Approach LOS	B	A				

Intersection Summary			
Average Delay	0.2		
Intersection Capacity Utilization	16.2%	ICU Level of Service	A
Analysis Period (min)	15		

Movement	EBL	EBT	EBR	WBL	WBT	WBR	NBL	NBT	NBR	SBL	SBT	SBR
Lane Configurations												
Ideal Flow (vphpl)	1700	1800	1800	1700	1800	1800	1700	1800	1800	1700	1800	1800
Total Lost time (s)	4.0	4.0		4.0	4.0		4.0	4.0	4.0	4.0	4.0	4.0
Lane Util. Factor	1.00	*1.00		1.00	*1.00		1.00	1.00	1.00	1.00	*1.00	1.00
Frt	1.00	1.00		1.00	1.00		1.00	1.00	1.00	1.00	1.00	1.00
Flt Protected	1.00	1.00		1.00	1.00		1.00	1.00	1.00	1.00	1.00	1.00
Satd. Flow (prot)	1700	3600		1700	5400		1700	1800	1800	1700	3600	1800
Flt Permitted	1.00	1.00		1.00	1.00		1.00	1.00	1.00	1.00	1.00	1.00
Satd. Flow (perm)	1700	3600		1700	5400		1700	1800	1800	1700	3600	1800
Volume (vph)	207	883	41	33	374	18	38	142	62	42	315	86
Peak-hour factor, PHF	0.92	0.92	0.92	0.92	0.92	0.92	0.92	0.92	0.92	0.92	0.92	0.92
Adj. Flow (vph)	225	960	45	36	407	20	41	154	67	46	342	93
RTOR Reduction (vph)	0	5	0	0	8	0	0	0	51	0	0	71
Lane Group Flow (vph)	225	1000	0	36	419	0	41	154	16	46	342	22
Turn Type	Prot			Prot			pm+pt		Perm	pm+pt		Perm
Protected Phases	7	4		3	8		5	2		1	6	
Permitted Phases							2		2	6		6
Actuated Green, G (s)	19.0	29.0		6.0	16.0		24.0	18.0	18.0	24.0	18.0	18.0
Effective Green, g (s)	19.0	29.0		6.0	16.0		24.0	18.0	18.0	24.0	18.0	18.0
Actuated g/C Ratio	0.25	0.39		0.08	0.21		0.32	0.24	0.24	0.32	0.24	0.24
Clearance Time (s)	4.0	4.0		4.0	4.0		4.0	4.0	4.0	4.0	4.0	4.0
Lane Grp Cap (vph)	431	1392		136	1152		635	432	432	635	864	432
v/s Ratio Prot	c0.13	c0.28		0.02	0.08		0.01	0.09		c0.01	c0.10	
v/s Ratio Perm							0.02		0.01	0.02		0.01
v/c Ratio	0.52	0.72		0.26	0.36		0.06	0.36	0.04	0.07	0.40	0.05
Uniform Delay, d1	24.1	19.5		32.4	25.2		17.8	23.7	21.9	17.8	23.9	21.9
Progression Factor	1.00	1.00		1.00	1.00		0.72	0.62	0.31	1.00	1.00	1.00
Incremental Delay, d2	4.5	3.2		4.7	0.9		0.2	2.2	0.2	0.2	1.4	0.2
Delay (s)	28.6	22.8		37.1	26.1		12.9	17.0	6.9	18.1	25.3	22.2
Level of Service	C	C		D	C		B	B	A	B	C	C
Approach Delay (s)		23.8			26.9			13.8			24.0	
Approach LOS		C			C			B			C	

Intersection Summary			
HCM Average Control Delay	23.4	HCM Level of Service	C
HCM Volume to Capacity ratio	0.55		
Actuated Cycle Length (s)	75.0	Sum of lost time (s)	16.0
Intersection Capacity Utilization	56.3%	ICU Level of Service	B
Analysis Period (min)	15		

c Critical Lane Group

Movement	EBL	EBT	EBR	WBL	WBT	WBR	NBL	NBT	NBR	SBL	SBT	SBR
Lane Configurations												
Ideal Flow (vphpl)	1700	1800	1800	1700	1800	1800	1700	1800	1800	1700	1800	1800
Total Lost time (s)	4.0	4.0		4.0	4.0		4.0	4.0		4.0	4.0	
Lane Util. Factor	1.00	*1.00		1.00	*1.00		1.00	*1.00		1.00	*1.00	
Frt	1.00	1.00		1.00	1.00		1.00	1.00		1.00	1.00	
Flt Protected	1.00	1.00		1.00	1.00		1.00	1.00		1.00	1.00	
Satd. Flow (prot)	1700	3600		1700	3600		1700	3600		1700	3600	
Flt Permitted	1.00	1.00		1.00	1.00		1.00	1.00		1.00	1.00	
Satd. Flow (perm)	1700	3600		1700	3600		1700	3600		1700	3600	
Volume (vph)	26	405	77	23	229	18	38	189	50	24	194	21
Peak-hour factor, PHF	0.78	0.78	0.78	0.78	0.78	0.78	0.78	0.78	0.78	0.78	0.78	0.78
Adj. Flow (vph)	33	519	99	29	294	23	49	242	64	31	249	27
RTOR Reduction (vph)	0	22	0	0	8	0	0	35	0	0	12	0
Lane Group Flow (vph)	33	596	0	29	309	0	49	271	0	31	264	0
Turn Type	Perm			Perm			pm+pt			pm+pt		
Protected Phases		4			8		5	2		1	6	
Permitted Phases	4			8			2			6		
Actuated Green, G (s)	27.0	27.0		27.0	27.0		36.0	22.0		36.0	22.0	
Effective Green, g (s)	27.0	27.0		27.0	27.0		36.0	22.0		36.0	22.0	
Actuated g/C Ratio	0.36	0.36		0.36	0.36		0.48	0.29		0.48	0.29	
Clearance Time (s)	4.0	4.0		4.0	4.0		4.0	4.0		4.0	4.0	
Lane Grp Cap (vph)	612	1296		612	1296		907	1056		907	1056	
v/s Ratio Prot		c0.17			0.09		c0.01	c0.08		0.01	0.07	
v/s Ratio Perm	0.02			0.02			0.02			0.01		
v/c Ratio	0.05	0.46		0.05	0.24		0.05	0.26		0.03	0.25	
Uniform Delay, d1	15.7	18.4		15.6	16.8		10.4	20.3		10.3	20.2	
Progression Factor	1.01	1.12		0.64	0.61		1.00	1.00		2.65	2.10	
Incremental Delay, d2	0.2	1.2		0.1	0.4		0.1	0.6		0.1	0.5	
Delay (s)	16.0	21.7		10.1	10.6		10.6	20.8		27.5	43.1	
Level of Service	B	C		B	B		B	C		C	D	
Approach Delay (s)		21.4			10.6			19.4			41.5	
Approach LOS		C			B			B			D	

Intersection Summary			
HCM Average Control Delay	22.4	HCM Level of Service	C
HCM Volume to Capacity ratio	0.30		
Actuated Cycle Length (s)	75.0	Sum of lost time (s)	12.0
Intersection Capacity Utilization	41.6%	ICU Level of Service	A
Analysis Period (min)	15		

c Critical Lane Group

Movement	EBL	EBT	EBR	WBL	WBT	WBR	NBL	NBT	NBR	SBL	SBT	SBR
Lane Configurations												
Ideal Flow (vphpl)	1700	1800	1800	1700	1800	1800	1700	1800	1800	1700	1800	1800
Total Lost time (s)	4.0	4.0		4.0	4.0		4.0	4.0		4.0	4.0	
Lane Util. Factor	1.00	*1.00		1.00	*1.00		1.00	*1.00		1.00	*1.00	
Frt	1.00	1.00		1.00	1.00		1.00	1.00		1.00	1.00	
Flt Protected	1.00	1.00		1.00	1.00		1.00	1.00		1.00	1.00	
Satd. Flow (prot)	1700	3600		1700	3600		1700	3600		1700	3600	
Flt Permitted	1.00	1.00		1.00	1.00		1.00	1.00		1.00	1.00	
Satd. Flow (perm)	1700	3600		1700	3600		1700	3600		1700	3600	
Volume (vph)	67	277	65	35	227	12	31	231	25	12	223	32
Peak-hour factor, PHF	0.85	0.85	0.85	0.85	0.85	0.85	0.85	0.85	0.85	0.85	0.85	0.85
Adj. Flow (vph)	79	326	76	41	267	14	36	272	29	14	262	38
RTOR Reduction (vph)	0	29	0	0	5	0	0	11	0	0	16	0
Lane Group Flow (vph)	79	373	0	41	276	0	36	290	0	14	284	0
Turn Type	Perm			Perm			Perm			Perm		
Protected Phases		4			8			2			6	
Permitted Phases	4			8			2			6		
Actuated Green, G (s)	34.0	34.0		34.0	34.0		33.0	33.0		33.0	33.0	
Effective Green, g (s)	34.0	34.0		34.0	34.0		33.0	33.0		33.0	33.0	
Actuated g/C Ratio	0.45	0.45		0.45	0.45		0.44	0.44		0.44	0.44	
Clearance Time (s)	4.0	4.0		4.0	4.0		4.0	4.0		4.0	4.0	
Lane Grp Cap (vph)	771	1632		771	1632		748	1584		748	1584	
v/s Ratio Prot		c0.10			0.08			c0.08			0.08	
v/s Ratio Perm	0.05			0.02			0.02			0.01		
v/c Ratio	0.10	0.23		0.05	0.17		0.05	0.18		0.02	0.18	
Uniform Delay, d1	11.8	12.5		11.5	12.1		12.0	12.8		11.9	12.8	
Progression Factor	0.99	1.09		1.00	1.00		1.00	1.00		1.00	1.00	
Incremental Delay, d2	0.2	0.3		0.1	0.2		0.1	0.3		0.0	0.2	
Delay (s)	11.9	13.9		11.6	12.4		12.1	13.0		11.9	13.0	
Level of Service	B	B		B	B		B	B		B	B	
Approach Delay (s)		13.6			12.3			12.9			13.0	
Approach LOS		B			B			B			B	

Intersection Summary			
HCM Average Control Delay	13.0	HCM Level of Service	B
HCM Volume to Capacity ratio	0.21		
Actuated Cycle Length (s)	75.0	Sum of lost time (s)	8.0
Intersection Capacity Utilization	37.9%	ICU Level of Service	A
Analysis Period (min)	15		

c Critical Lane Group

Movement	EBL	EBT	EBR	WBL	WBT	WBR	NBL	NBT	NBR	SBL	SBT	SBR
Lane Configurations												
Ideal Flow (vphpl)	1700	1800	1800	1700	1800	1800	1700	1800	1800	1700	1800	1800
Total Lost time (s)	4.0	4.0	4.0	4.0	4.0		4.0	4.0		4.0	4.0	4.0
Lane Util. Factor	1.00	*1.00	1.00	1.00	0.95		1.00	0.95		1.00	*1.00	1.00
Frt	1.00	1.00	0.85	1.00	1.00		1.00	0.96		1.00	1.00	0.85
Flt Protected	0.95	1.00	1.00	0.95	1.00		0.95	1.00		0.95	1.00	1.00
Satd. Flow (prot)	1615	3600	1530	1615	3405		1615	3298		1615	3600	1530
Flt Permitted	0.95	1.00	1.00	0.95	1.00		0.64	1.00		0.65	1.00	1.00
Satd. Flow (perm)	1615	3600	1530	1615	3405		1080	3298		1110	3600	1530
Volume (vph)	27	778	304	27	263	8	120	108	34	25	177	48
Peak-hour factor, PHF	0.91	0.91	0.91	0.91	0.91	0.91	0.91	0.91	0.91	0.91	0.91	0.91
Adj. Flow (vph)	30	855	334	30	289	9	132	119	37	27	195	53
RTOR Reduction (vph)	0	0	226	0	3	0	0	28	0	0	0	40
Lane Group Flow (vph)	30	855	108	30	295	0	132	128	0	27	195	13
Turn Type	Prot		Perm	Prot			pm+pt			pm+pt		Perm
Protected Phases	7	4		3	8		5	2		1	6	
Permitted Phases			4				2			6		6
Actuated Green, G (s)	6.0	21.0	21.0	6.0	21.0		22.0	16.0		22.0	16.0	16.0
Effective Green, g (s)	6.0	21.0	21.0	6.0	21.0		22.0	16.0		22.0	16.0	16.0
Actuated g/C Ratio	0.09	0.32	0.32	0.09	0.32		0.34	0.25		0.34	0.25	0.25
Clearance Time (s)	4.0	4.0	4.0	4.0	4.0		4.0	4.0		4.0	4.0	4.0
Lane Grp Cap (vph)	149	1163	494	149	1100		415	812		422	886	377
v/s Ratio Prot	c0.02	c0.24		0.02	0.09		c0.03	0.04		0.01	0.05	
v/s Ratio Perm			0.07				c0.08			0.02		0.01
v/c Ratio	0.20	0.74	0.22	0.20	0.27		0.32	0.16		0.06	0.22	0.03
Uniform Delay, d1	27.3	19.5	16.0	27.3	16.3		15.5	19.2		14.5	19.5	18.6
Progression Factor	1.00	1.00	1.00	1.00	1.00		1.00	1.00		1.00	1.00	1.00
Incremental Delay, d2	3.0	4.2	1.0	3.0	0.6		2.0	0.4		0.3	0.6	0.2
Delay (s)	30.3	23.7	17.0	30.3	16.9		17.5	19.6		14.8	20.1	18.8
Level of Service	C	C	B	C	B		B	B		B	C	B
Approach Delay (s)		22.0			18.1			18.7			19.3	
Approach LOS		C			B			B			B	

Intersection Summary			
HCM Average Control Delay	20.6	HCM Level of Service	C
HCM Volume to Capacity ratio	0.48		
Actuated Cycle Length (s)	65.0	Sum of lost time (s)	16.0
Intersection Capacity Utilization	47.7%	ICU Level of Service	A
Analysis Period (min)	15		

c Critical Lane Group

Movement	EBL	EBT	WBT	WBR	SBL	SBR
Lane Configurations						
Sign Control		Free	Free		Stop	
Grade		0%	0%		0%	
Volume (veh/h)	37	363	234	33	22	27
Peak Hour Factor	0.95	0.95	0.95	0.95	0.95	0.95
Hourly flow rate (vph)	39	382	246	35	23	28
Pedestrians						
Lane Width (ft)						
Walking Speed (ft/s)						
Percent Blockage						
Right turn flare (veh)						
Median type					None	
Median storage veh)						
Upstream signal (ft)		673	695			
pX, platoon unblocked						
vC, conflicting volume	281				533	141
vC1, stage 1 conf vol	0					
vC2, stage 2 conf vol	0					
vCu, unblocked vol	281				533	141
tC, single (s)	4.1				6.8	6.9
tC, 2 stage (s)	3.1					
tF (s)	2.2				3.5	3.3
p0 queue free %	96				95	97
cM capacity (veh/h)	996				463	888

Direction, Lane #	EB 1	EB 2	WB 1	WB 2	SB 1	SB 2
Volume Total	166	255	164	117	23	28
Volume Left	39	0	0	0	23	0
Volume Right	0	0	0	35	0	28
cSH	996	1700	1700	1700	463	888
Volume to Capacity	0.04	0.15	0.10	0.07	0.05	0.03
Queue Length 95th (ft)	3	0	0	0	4	2
Control Delay (s)	2.3	0.0	0.0	0.0	13.2	9.2
Lane LOS	A				B	A
Approach Delay (s)	0.9		0.0		11.0	
Approach LOS					B	

Intersection Summary			
Average Delay	1.3		
Intersection Capacity Utilization	33.0%	ICU Level of Service	A
Analysis Period (min)	15		

Movement	EBL	EBT	EBR	WBL	WBT	WBR	NBL	NBT	NBR	SBL	SBT	SBR
Lane Configurations												
Ideal Flow (vphpl)	1700	1800	1800	1700	1800	1800	1700	1800	1800	1700	1800	1800
Total Lost time (s)	4.0	4.0		4.0	4.0		4.0	4.0	4.0	4.0	4.0	4.0
Lane Util. Factor	1.00	*1.00		1.00	*1.00		1.00	1.00	1.00	1.00	1.00	1.00
Frt	1.00	0.99		1.00	0.99		1.00	1.00	0.85	1.00	1.00	0.85
Flt Protected	0.95	1.00		0.95	1.00		0.95	1.00	1.00	0.95	1.00	1.00
Satd. Flow (prot)	1615	3548		1615	3569		1615	1800	1530	1615	1800	1530
Flt Permitted	0.54	1.00		0.26	1.00		0.53	1.00	1.00	0.65	1.00	1.00
Satd. Flow (perm)	922	3548		440	3569		907	1800	1530	1102	1800	1530
Volume (vph)	34	675	72	45	298	18	38	148	50	50	238	23
Peak-hour factor, PHF	0.86	0.86	0.86	0.86	0.86	0.86	0.86	0.86	0.86	0.86	0.86	0.86
Adj. Flow (vph)	40	785	84	52	347	21	44	172	58	58	277	27
RTOR Reduction (vph)	0	14	0	0	8	0	0	0	34	0	0	16
Lane Group Flow (vph)	40	855	0	52	360	0	44	172	24	58	277	11
Turn Type	Perm			Perm			Perm		Perm	Perm		Perm
Protected Phases		4			8			2			6	
Permitted Phases	4			8			2		2	6		6
Actuated Green, G (s)	27.0	27.0		27.0	27.0		25.0	25.0	25.0	25.0	25.0	25.0
Effective Green, g (s)	27.0	27.0		27.0	27.0		25.0	25.0	25.0	25.0	25.0	25.0
Actuated g/C Ratio	0.45	0.45		0.45	0.45		0.42	0.42	0.42	0.42	0.42	0.42
Clearance Time (s)	4.0	4.0		4.0	4.0		4.0	4.0	4.0	4.0	4.0	4.0
Lane Grp Cap (vph)	415	1597		198	1606		378	750	638	459	750	638
v/s Ratio Prot		c0.24			0.10			0.10			c0.15	
v/s Ratio Perm	0.04			0.12			0.05		0.02	0.05		0.01
v/c Ratio	0.10	0.54		0.26	0.22		0.12	0.23	0.04	0.13	0.37	0.02
Uniform Delay, d1	9.5	12.0		10.3	10.1		10.7	11.3	10.4	10.8	12.1	10.3
Progression Factor	1.00	1.00		1.00	1.00		0.38	0.36	0.08	1.00	1.00	1.00
Incremental Delay, d2	0.5	1.3		3.2	0.3		0.6	0.7	0.1	0.6	1.4	0.1
Delay (s)	9.9	13.2		13.5	10.4		4.6	4.8	0.9	11.3	13.5	10.3
Level of Service	A	B		B	B		A	A	A	B	B	B
Approach Delay (s)		13.1			10.8			3.9			12.9	
Approach LOS		B			B			A			B	

Intersection Summary			
HCM Average Control Delay	11.3	HCM Level of Service	B
HCM Volume to Capacity ratio	0.46		
Actuated Cycle Length (s)	60.0	Sum of lost time (s)	8.0
Intersection Capacity Utilization	55.3%	ICU Level of Service	B
Analysis Period (min)	15		

c Critical Lane Group

Movement	EBL	EBT	EBR	WBL	WBT	WBR	NBL	NBT	NBR	SBL	SBT	SBR
Lane Configurations												
Ideal Flow (vphpl)	1700	1800	1800	1700	1800	1800	1700	1800	1800	1700	1800	1800
Total Lost time (s)	4.0	4.0		4.0	4.0		4.0	4.0	4.0	4.0	4.0	4.0
Lane Util. Factor	1.00	*1.00		1.00	*1.00		1.00	1.00	1.00	1.00	1.00	1.00
Frt	1.00	0.95		1.00	0.96		1.00	1.00	0.85	1.00	1.00	0.85
Flt Protected	0.95	1.00		0.95	1.00		0.95	1.00	1.00	0.95	1.00	1.00
Satd. Flow (prot)	1615	3425		1615	3462		1615	1800	1530	1615	1800	1530
Flt Permitted	0.72	1.00		0.68	1.00		0.20	1.00	1.00	0.59	1.00	1.00
Satd. Flow (perm)	1230	3425		1162	3462		343	1800	1530	997	1800	1530
Volume (vph)	5	67	32	14	33	11	24	245	99	12	344	21
Peak-hour factor, PHF	0.87	0.87	0.87	0.87	0.87	0.87	0.87	0.87	0.87	0.87	0.87	0.87
Adj. Flow (vph)	6	77	37	16	38	13	28	282	114	14	395	24
RTOR Reduction (vph)	0	27	0	0	10	0	0	0	65	0	0	15
Lane Group Flow (vph)	6	87	0	16	41	0	28	282	49	14	395	9
Turn Type	pm+pt			pm+pt			pm+pt		Perm	Perm		Perm
Protected Phases	7	4		3	8		5	2			6	
Permitted Phases	4			8			2		2	6		6
Actuated Green, G (s)	22.0	16.0		22.0	16.0		26.0	26.0	26.0	16.0	16.0	16.0
Effective Green, g (s)	22.0	16.0		22.0	16.0		26.0	26.0	26.0	16.0	16.0	16.0
Actuated g/C Ratio	0.37	0.27		0.37	0.27		0.43	0.43	0.43	0.27	0.27	0.27
Clearance Time (s)	4.0	4.0		4.0	4.0		4.0	4.0	4.0	4.0	4.0	4.0
Lane Grp Cap (vph)	490	913		471	923		276	780	663	266	480	408
v/s Ratio Prot	0.00	c0.03		c0.00	0.01		0.01	c0.16			c0.22	
v/s Ratio Perm	0.00			0.01			0.03		0.03	0.01		0.01
v/c Ratio	0.01	0.10		0.03	0.04		0.10	0.36	0.07	0.05	0.82	0.02
Uniform Delay, d1	12.1	16.6		12.2	16.3		11.1	11.4	10.0	16.4	20.7	16.2
Progression Factor	1.00	1.00		1.00	1.00		1.00	1.00	1.00	1.58	1.52	2.03
Incremental Delay, d2	0.0	0.2		0.1	0.1		0.7	1.3	0.2	0.4	14.0	0.1
Delay (s)	12.1	16.8		12.3	16.4		11.9	12.7	10.2	26.2	45.4	33.0
Level of Service	B	B		B	B		B	B	B	C	D	C
Approach Delay (s)		16.5			15.4			12.0			44.1	
Approach LOS		B			B			B			D	

Intersection Summary			
HCM Average Control Delay	26.0	HCM Level of Service	C
HCM Volume to Capacity ratio	0.40		
Actuated Cycle Length (s)	60.0	Sum of lost time (s)	16.0
Intersection Capacity Utilization	36.5%	ICU Level of Service	A
Analysis Period (min)	15		

c Critical Lane Group

Movement	EBL	EBT	EBR	EBR2	WBL2	WBL	WBT	WBR	NBL2	NBL	NBT	NBR
Lane Configurations												
Ideal Flow (vphpl)	1700	1800	1800	1800	1600	1600	1800	1800	1600	1600	1800	1800
Total Lost time (s)	4.0	4.0	4.0			4.0	4.0			4.0	4.0	4.0
Lane Util. Factor	1.00	*1.00	*1.00			*1.00	*1.00			*1.00	*1.00	1.00
Frt	1.00	1.00	0.85			1.00	0.99			1.00	1.00	0.85
Flt Protected	0.95	1.00	1.00			0.95	1.00			0.95	1.00	1.00
Satd. Flow (prot)	1615	3600	1530			3040	3564			3040	3600	1530
Flt Permitted	0.95	1.00	1.00			0.95	1.00			0.95	1.00	1.00
Satd. Flow (perm)	1615	3600	1530			3040	3564			3040	3600	1530
Volume (vph)	65	342	63	2	53	125	279	20	22	48	164	52
Peak-hour factor, PHF	0.82	0.82	0.82	0.82	0.82	0.82	0.82	0.82	0.82	0.82	0.82	0.82
Adj. Flow (vph)	79	417	77	2	65	152	340	24	27	59	200	63
RTOR Reduction (vph)	0	0	1	0	0	0	6	0	0	0	0	51
Lane Group Flow (vph)	79	417	78	0	0	217	358	0	0	86	200	12
Turn Type	Prot		Perm		Prot	Prot			Prot	Prot		Perm
Protected Phases	5	2			1	1	6		3	3	8	
Permitted Phases			2									8
Actuated Green, G (s)	11.0	17.0	17.0			12.0	18.0			7.0	17.0	17.0
Effective Green, g (s)	11.0	17.0	17.0			12.0	18.0			7.0	17.0	17.0
Actuated g/C Ratio	0.12	0.19	0.19			0.13	0.20			0.08	0.19	0.19
Clearance Time (s)	4.0	4.0	4.0			4.0	4.0			4.0	4.0	4.0
Lane Grp Cap (vph)	197	680	289			405	713			236	680	289
v/s Ratio Prot	0.05	c0.12				c0.07	0.10			c0.03	c0.06	
v/s Ratio Perm			0.05									0.01
v/c Ratio	0.40	0.61	0.27			0.54	0.50			0.36	0.29	0.04
Uniform Delay, d1	36.5	33.5	31.2			36.4	32.0			39.4	31.3	29.8
Progression Factor	1.00	1.00	1.00			1.00	1.00			1.00	1.00	1.00
Incremental Delay, d2	6.0	4.1	2.3			5.0	2.5			4.3	1.1	0.3
Delay (s)	42.4	37.6	33.5			41.4	34.5			43.7	32.4	30.1
Level of Service	D	D	C			D	C			D	C	C
Approach Delay (s)		37.7					37.1				34.8	
Approach LOS		D					D				C	

Intersection Summary			
HCM Average Control Delay	35.7	HCM Level of Service	D
HCM Volume to Capacity ratio	0.45		
Actuated Cycle Length (s)	90.0	Sum of lost time (s)	20.0
Intersection Capacity Utilization	50.0%	ICU Level of Service	A
Analysis Period (min)	15		

c Critical Lane Group

Movement	SBL	SBT	SBR	SBR2	NEL2	NEL	NER	NER2
Lane Configurations								
Ideal Flow (vphpl)	1700	1800	1800	1800	1600	1600	1800	1800
Total Lost time (s)	4.0	4.0	4.0			4.0	4.0	
Lane Util. Factor	1.00	*1.00	*1.00			*1.00	*1.00	
Frt	1.00	1.00	0.85			1.00	0.85	
Flt Protected	0.95	1.00	1.00			0.95	1.00	
Satd. Flow (prot)	1615	3600	1530			3040	3060	
Flt Permitted	0.95	1.00	1.00			0.95	1.00	
Satd. Flow (perm)	1615	3600	1530			3040	3060	
Volume (vph)	25	158	35	40	4	108	181	38
Peak-hour factor, PHF	0.82	0.82	0.82	0.82	0.82	0.82	0.82	0.82
Adj. Flow (vph)	30	193	43	49	5	132	221	46
RTOR Reduction (vph)	0	0	40	0	0	0	21	0
Lane Group Flow (vph)	30	193	52	0	0	137	246	0
Turn Type	Prot		Perm		Split		Perm	
Protected Phases	7	4			9	9		
Permitted Phases			4				9	
Actuated Green, G (s)	7.0	17.0	17.0			17.0	17.0	
Effective Green, g (s)	7.0	17.0	17.0			17.0	17.0	
Actuated g/C Ratio	0.08	0.19	0.19			0.19	0.19	
Clearance Time (s)	4.0	4.0	4.0			4.0	4.0	
Lane Grp Cap (vph)	126	680	289			574	578	
v/s Ratio Prot	0.02	0.05				0.05		
v/s Ratio Perm			0.03				c0.08	
v/c Ratio	0.24	0.28	0.18			0.24	0.43	
Uniform Delay, d1	39.0	31.3	30.7			31.0	32.2	
Progression Factor	1.00	1.00	1.00			1.00	1.00	
Incremental Delay, d2	4.4	1.0	1.4			1.0	2.3	
Delay (s)	43.4	32.3	32.0			32.0	34.5	
Level of Service	D	C	C			C	C	
Approach Delay (s)		33.3				33.6		
Approach LOS		C				C		

Intersection Summary

EXISTING CONDITIONS

PM PEAK HOUR

Movement	EBL	EBT	EBR	WBL	WBT	WBR	NBL	NBT	NBR	SBL	SBT	SBR
Lane Configurations												
Sign Control		Free			Free			Stop			Stop	
Grade		0%			0%			0%			0%	
Volume (veh/h)	2	88	67	42	124	1	5	2	11	0	0	0
Peak Hour Factor	0.94	0.94	0.94	0.94	0.94	0.94	0.94	0.94	0.94	0.94	0.94	0.94
Hourly flow rate (vph)	2	94	71	45	132	1	5	2	12	0	0	0
Pedestrians												
Lane Width (ft)												
Walking Speed (ft/s)												
Percent Blockage												
Right turn flare (veh)												
Median type								None			None	
Median storage veh)												
Upstream signal (ft)												
pX, platoon unblocked												
vC, conflicting volume	133			165			320	320	47	286	391	132
vC1, stage 1 conf vol												
vC2, stage 2 conf vol												
vCu, unblocked vol	133			165			320	320	47	286	391	132
tC, single (s)	4.1			4.1			7.5	6.5	6.9	7.5	6.5	6.9
tC, 2 stage (s)												
tF (s)	2.2			2.2			3.5	4.0	3.3	3.5	4.0	3.3
p0 queue free %	100			97			99	100	99	100	100	100
cM capacity (veh/h)	1464			1426			599	580	1019	624	530	899

Direction, Lane #	EB 1	EB 2	EB 3	WB 1	NB 1
Volume Total	33	62	71	178	19
Volume Left	2	0	0	45	5
Volume Right	0	0	71	1	12
cSH	1464	1700	1700	1426	797
Volume to Capacity	0.00	0.04	0.04	0.03	0.02
Queue Length 95th (ft)	0	0	0	2	2
Control Delay (s)	0.5	0.0	0.0	2.1	9.6
Lane LOS	A			A	A
Approach Delay (s)	0.1			2.1	9.6
Approach LOS					A

Intersection Summary			
Average Delay	1.6		
Intersection Capacity Utilization	26.1%	ICU Level of Service	A
Analysis Period (min)	15		

Existing PM Peak Hour
City of San Bernardino
Redlands First Mile

Level Of Service Computation Report
2000 HCM 4-Way Stop Method (Base Volume Alternative)

Intersection #2 K St and 2nd St

Cycle (sec): 100 Critical Vol./Cap.(X): 0.237
Loss Time (sec): 0 (Y+R=4.0 sec) Average Delay (sec/veh): 9.3
Optimal Cycle: 0 Level Of Service: A

Street Name:	K St						2nd St					
Approach:	North Bound			South Bound			East Bound			West Bound		
Movement:	L - T - R			L - T - R			L - T - R			L - T - R		
Control:	Stop Sign			Stop Sign			Stop Sign			Stop Sign		
Rights:	Include			Include			Include			Include		
Min. Green:	0	0	0	0	0	0	0	0	0	0	0	0
Lanes:	0 0	1! 0	0	0 0	1! 0	0	1 0	1 1	0	1 0	1 1	0
Volume Module:												
Base Vol:	36	5	17	24	23	22	7	274	24	26	283	7
Growth Adj:	1.00	1.00	1.00	1.00	1.00	1.00	1.00	1.00	1.00	1.00	1.00	1.00
Initial Bse:	36	5	17	24	23	22	7	274	24	26	283	7
User Adj:	1.00	1.00	1.00	1.00	1.00	1.00	1.00	1.00	1.00	1.00	1.00	1.00
PHF Adj:	0.92	0.92	0.92	0.92	0.92	0.92	0.92	0.92	0.92	0.92	0.92	0.92
PHF Volume:	39	5	18	26	25	24	8	298	26	28	308	8
Reduct Vol:	0	0	0	0	0	0	0	0	0	0	0	0
Reduced Vol:	39	5	18	26	25	24	8	298	26	28	308	8
PCE Adj:	1.00	1.00	1.00	1.00	1.00	1.00	1.00	1.00	1.00	1.00	1.00	1.00
MLF Adj:	1.00	1.00	1.00	1.00	1.00	1.00	1.00	1.00	1.00	1.00	1.00	1.00
FinalVolume:	39	5	18	26	25	24	8	298	26	28	308	8
Saturation Flow Module:												
Adjustment:	1.00	1.00	1.00	1.00	1.00	1.00	1.00	1.00	1.00	1.00	1.00	1.00
Lanes:	0.62	0.09	0.29	0.35	0.33	0.32	1.00	1.84	0.16	1.00	1.95	0.05
Final Sat.:	381	53	180	217	208	199	617	1256	111	619	1329	33
Capacity Analysis Module:												
Vol/Sat:	0.10	0.10	0.10	0.12	0.12	0.12	0.01	0.24	0.23	0.05	0.23	0.23
Crit Moves:		****			****			****			****	
Delay/Veh:	9.0	9.0	9.0	9.0	9.0	9.0	8.5	9.4	9.3	8.7	9.4	9.3
Delay Adj:	1.00	1.00	1.00	1.00	1.00	1.00	1.00	1.00	1.00	1.00	1.00	1.00
AdjDel/Veh:	9.0	9.0	9.0	9.0	9.0	9.0	8.5	9.4	9.3	8.7	9.4	9.3
LOS by Move:	A	A	A	A	A	A	A	A	A	A	A	A
ApproachDel:		9.0			9.0			9.4			9.3	
Delay Adj:		1.00			1.00			1.00			1.00	
ApprAdjDel:		9.0			9.0			9.4			9.3	
LOS by Appr:		A			A			A			A	
AllWayAvgQ:	0.1	0.1	0.1	0.1	0.1	0.1	0.0	0.3	0.3	0.0	0.3	0.3

Note: Queue reported is the number of cars per lane.

Movement	EBL	EBT	EBR	WBL	WBT	WBR	NBL	NBT	NBR	SBL	SBT	SBR
Lane Configurations												
Ideal Flow (vphpl)	1800	1800	1800	1800	1800	1800	1800	1800	1800	1800	1800	1800
Total Lost time (s)		4.0			4.0			4.0	4.0		4.0	4.0
Lane Util. Factor		*1.00			*1.00			1.00	1.00		1.00	1.00
Frt		1.00			1.00			1.00	1.00		1.00	1.00
Flt Protected		1.00			1.00			1.00	1.00		1.00	1.00
Satd. Flow (prot)		3600			3600			1800	1800		1800	1800
Flt Permitted		1.00			1.00			1.00	1.00		1.00	1.00
Satd. Flow (perm)		3600			3600			1800	1800		1800	1800
Volume (vph)	6	350	35	108	518	13	32	34	130	5	42	22
Peak-hour factor, PHF	0.92	0.92	0.92	0.92	0.92	0.92	0.92	0.92	0.92	0.92	0.92	0.92
Adj. Flow (vph)	7	380	38	117	563	14	35	37	141	5	46	24
RTOR Reduction (vph)	0	10	0	0	2	0	0	0	107	0	0	18
Lane Group Flow (vph)	0	415	0	0	692	0	0	72	34	0	51	6
Turn Type	Perm			Perm			Split		Perm	Split		Perm
Protected Phases		4			8		2	2		6	6	
Permitted Phases	4			8					2			6
Actuated Green, G (s)		27.0			27.0			18.0	18.0		18.0	18.0
Effective Green, g (s)		27.0			27.0			18.0	18.0		18.0	18.0
Actuated g/C Ratio		0.36			0.36			0.24	0.24		0.24	0.24
Clearance Time (s)		4.0			4.0			4.0	4.0		4.0	4.0
Lane Grp Cap (vph)		1296			1296			432	432		432	432
v/s Ratio Prot								c0.04			c0.03	
v/s Ratio Perm		0.12			0.19				0.02			0.00
v/c Ratio		0.32			0.53			0.17	0.08		0.12	0.01
Uniform Delay, d1		17.4			19.0			22.6	22.1		22.3	21.7
Progression Factor		1.00			1.07			1.00	1.00		1.00	1.00
Incremental Delay, d2		0.7			1.5			0.8	0.4		0.6	0.1
Delay (s)		18.0			22.0			23.4	22.4		22.8	21.8
Level of Service		B			C			C	C		C	C
Approach Delay (s)		18.0			22.0			22.8			22.5	
Approach LOS		B			C			C			C	

Intersection Summary			
HCM Average Control Delay	20.9	HCM Level of Service	C
HCM Volume to Capacity ratio	0.31		
Actuated Cycle Length (s)	75.0	Sum of lost time (s)	12.0
Intersection Capacity Utilization	50.9%	ICU Level of Service	A
Analysis Period (min)	15		

c Critical Lane Group

Movement	EBT	EBR	WBL	WBT	NBL	NBR
Lane Configurations						
Sign Control	Free			Free	Stop	
Grade	0%			0%	0%	
Volume (veh/h)	90	1	20	162	1	10
Peak Hour Factor	0.83	0.83	0.83	0.83	0.83	0.83
Hourly flow rate (vph)	108	1	24	195	1	12
Pedestrians						
Lane Width (ft)						
Walking Speed (ft/s)						
Percent Blockage						
Right turn flare (veh)						
Median type					None	
Median storage veh)						
Upstream signal (ft)				682		
pX, platoon unblocked						
vC, conflicting volume			110		255	55
vC1, stage 1 conf vol						
vC2, stage 2 conf vol						
vCu, unblocked vol			110		255	55
tC, single (s)			4.1		6.8	6.9
tC, 2 stage (s)						
tF (s)			2.2		3.5	3.3
p0 queue free %			98		100	99
cM capacity (veh/h)			1493		706	1007

Direction, Lane #	EB 1	EB 2	WB 1	WB 2	NB 1
Volume Total	72	37	89	130	13
Volume Left	0	0	24	0	1
Volume Right	0	1	0	0	12
cSH	1700	1700	1493	1700	969
Volume to Capacity	0.04	0.02	0.02	0.08	0.01
Queue Length 95th (ft)	0	0	1	0	1
Control Delay (s)	0.0	0.0	2.1	0.0	8.8
Lane LOS			A		A
Approach Delay (s)	0.0		0.9		8.8
Approach LOS					A

Intersection Summary			
Average Delay	0.9		
Intersection Capacity Utilization	18.7%	ICU Level of Service	A
Analysis Period (min)	15		

Existing PM Peak Hour
City of San Bernardino
Redlands First Mile

Level Of Service Computation Report
2000 HCM Unsignalized Method (Base Volume Alternative)

Intersection #5 J St and 2nd St

Average Delay (sec/veh): 1.1 Worst Case Level Of Service: B[14.8]

Street Name:	J St						2nd St					
Approach:	North Bound			South Bound			East Bound			West Bound		
Movement:	L	T	R	L	T	R	L	T	R	L	T	R
Control:	Stop Sign			Stop Sign			Uncontrolled			Uncontrolled		
Rights:	Include			Include			Include			Include		
Lanes:	0 0 1! 0 0			0 0 1! 0 0			1 0 1 1 0			1 0 1 1 0		
Volume Module:												
Base Vol:	10	5	25	7	6	4	6	463	10	14	293	9
Growth Adj:	1.00	1.00	1.00	1.00	1.00	1.00	1.00	1.00	1.00	1.00	1.00	1.00
Initial Bse:	10	5	25	7	6	4	6	463	10	14	293	9
User Adj:	1.00	1.00	1.00	1.00	1.00	1.00	1.00	1.00	1.00	1.00	1.00	1.00
PHF Adj:	0.95	0.95	0.95	0.95	0.95	0.95	0.95	0.95	0.95	0.95	0.95	0.95
PHF Volume:	11	5	26	7	6	4	6	487	11	15	308	9
Reduct Vol:	0	0	0	0	0	0	0	0	0	0	0	0
FinalVolume:	11	5	26	7	6	4	6	487	11	15	308	9
Critical Gap Module:												
Critical Gp:	7.5	6.5	6.9	7.5	6.5	6.9	4.1	xxxx	xxxxx	4.1	xxxx	xxxxx
FollowUpTim:	3.5	4.0	3.3	3.5	4.0	3.3	2.2	xxxx	xxxxx	2.2	xxxx	xxxxx
Capacity Module:												
Cnflict Vol:	692	853	249	602	853	159	318	xxxx	xxxxx	498	xxxx	xxxxx
Potent Cap.:	334	299	757	388	299	864	1254	xxxx	xxxxx	1076	xxxx	xxxxx
Move Cap.:	322	293	757	364	293	864	1254	xxxx	xxxxx	1076	xxxx	xxxxx
Volume/Cap:	0.03	0.02	0.03	0.02	0.02	0.00	0.01	xxxx	xxxx	0.01	xxxx	xxxx
Level Of Service Module:												
2Way95thQ:	xxxx	xxxx	xxxxx	xxxx	xxxx	xxxxx	0.0	xxxx	xxxxx	0.0	xxxx	xxxxx
Control Del:	xxxxx	xxxx	xxxxx	xxxxx	xxxx	xxxxx	7.9	xxxx	xxxxx	8.4	xxxx	xxxxx
LOS by Move:	*	*	*	*	*	*	A	*	*	A	*	*
Movement:	LT	LTR	RT	LT	LTR	RT	LT	LTR	RT	LT	LTR	RT
Shared Cap.:	xxxx	493	xxxxx	xxxx	383	xxxxx	xxxx	xxxx	xxxxx	xxxx	xxxx	xxxxx
SharedQueue:	xxxxx	0.3	xxxxx	xxxxx	0.1	xxxxx	xxxxx	xxxx	xxxxx	xxxxx	xxxx	xxxxx
Shrd ConDel:	xxxxx	13.0	xxxxx	xxxxx	14.8	xxxxx	xxxxx	xxxx	xxxxx	xxxxx	xxxx	xxxxx
Shared LOS:	*	B	*	*	B	*	*	*	*	*	*	*
ApproachDel:		13.0			14.8			xxxxxx			xxxxxx	
ApproachLOS:		B			B			*			*	

Note: Queue reported is the number of cars per lane.

Movement	EBL	EBT	EBR	WBL	WBT	WBR	NBL	NBT	NBR	SBL	SBT	SBR
Lane Configurations												
Sign Control		Free			Free			Stop			Stop	
Grade		0%			0%			0%			0%	
Volume (veh/h)	28	427	4	39	546	11	5	10	11	6	10	9
Peak Hour Factor	0.97	0.97	0.97	0.97	0.97	0.97	0.97	0.97	0.97	0.97	0.97	0.97
Hourly flow rate (vph)	29	440	4	40	563	11	5	10	11	6	10	9
Pedestrians												
Lane Width (ft)												
Walking Speed (ft/s)												
Percent Blockage												
Right turn flare (veh)												
Median type								None			None	
Median storage veh)												
Upstream signal (ft)		704			682							
pX, platoon unblocked	0.98						0.98	0.98		0.98	0.98	0.98
vC, conflicting volume	574			444			876	1155	222	943	1151	287
vC1, stage 1 conf vol												
vC2, stage 2 conf vol												
vCu, unblocked vol	541			444			850	1135	222	919	1131	248
tC, single (s)	4.1			4.1			7.5	6.5	6.9	7.5	6.5	6.9
tC, 2 stage (s)												
tF (s)	2.2			2.2			3.5	4.0	3.3	3.5	4.0	3.3
p0 queue free %	97			96			98	94	99	97	95	99
cM capacity (veh/h)	1014			1127			226	187	788	201	188	742

Direction, Lane #	EB 1	EB 2	WB 1	WB 2	NB 1	SB 1
Volume Total	249	224	322	293	27	26
Volume Left	29	0	40	0	5	6
Volume Right	0	4	0	11	11	9
cSH	1014	1700	1127	1700	290	263
Volume to Capacity	0.03	0.13	0.04	0.17	0.09	0.10
Queue Length 95th (ft)	2	0	3	0	8	8
Control Delay (s)	1.3	0.0	1.4	0.0	18.7	20.2
Lane LOS	A		A		C	C
Approach Delay (s)	0.7		0.7		18.7	20.2
Approach LOS					C	C

Intersection Summary			
Average Delay	1.5		
Intersection Capacity Utilization	44.3%	ICU Level of Service	A
Analysis Period (min)	15		

Movement	EBL	EBT	EBR	WBL	WBT	WBR	NBL	NBT	NBR	SBL	SBT	SBR
Lane Configurations												
Ideal Flow (vphpl)	1800	1800	1800	1800	1800	1800	1700	1800	1800	1700	1800	1800
Total Lost time (s)		4.0			4.0		4.0	4.0		4.0	4.0	
Lane Util. Factor		*1.00			*1.00		1.00	1.00		1.00	*1.00	
Frt		1.00			1.00		1.00	1.00		1.00	1.00	
Flt Protected		1.00			1.00		1.00	1.00		1.00	1.00	
Satd. Flow (prot)		3600			3600		1700	1800		1700	3600	
Flt Permitted		1.00			1.00		1.00	1.00		1.00	1.00	
Satd. Flow (perm)		3600			3600		1700	1800		1700	3600	
Volume (vph)	0	87	20	44	53	0	8	2	33	65	255	63
Peak-hour factor, PHF	0.86	0.86	0.86	0.86	0.86	0.86	0.86	0.86	0.86	0.86	0.86	0.86
Adj. Flow (vph)	0	101	23	51	62	0	9	2	38	76	297	73
RTOR Reduction (vph)	0	13	0	0	0	0	0	21	0	0	31	0
Lane Group Flow (vph)	0	111	0	0	113	0	9	19	0	76	339	0
Turn Type	Perm			Perm			Perm			Perm		
Protected Phases		4			8			2			6	
Permitted Phases	4			8			2			6		
Actuated Green, G (s)		34.0			34.0		33.0	33.0		33.0	33.0	
Effective Green, g (s)		34.0			34.0		33.0	33.0		33.0	33.0	
Actuated g/C Ratio		0.45			0.45		0.44	0.44		0.44	0.44	
Clearance Time (s)		4.0			4.0		4.0	4.0		4.0	4.0	
Lane Grp Cap (vph)		1632			1632		748	792		748	1584	
v/s Ratio Prot		0.03						0.01			c0.09	
v/s Ratio Perm					0.03		0.01			0.04		
v/c Ratio		0.07			0.07		0.01	0.02		0.10	0.21	
Uniform Delay, d1		11.6			11.6		11.8	11.9		12.3	13.0	
Progression Factor		1.00			0.44		0.86	0.83		1.00	1.00	
Incremental Delay, d2		0.1			0.1		0.0	0.1		0.3	0.3	
Delay (s)		11.6			5.1		10.1	9.9		12.6	13.3	
Level of Service		B			A		B	A		B	B	
Approach Delay (s)		11.6			5.1			9.9			13.2	
Approach LOS		B			A			A			B	

Intersection Summary			
HCM Average Control Delay	11.5	HCM Level of Service	B
HCM Volume to Capacity ratio	0.14		
Actuated Cycle Length (s)	75.0	Sum of lost time (s)	8.0
Intersection Capacity Utilization	26.6%	ICU Level of Service	A
Analysis Period (min)	15		

c Critical Lane Group

Movement	EBL	EBT	EBR	WBL	WBT	WBR	NBL	NBT	NBR	SBL	SBT	SBR
Lane Configurations												
Ideal Flow (vphpl)	1700	1800	1800	1700	1800	1800	1800	1800	1800	1800	1800	1800
Total Lost time (s)	4.0	4.0		4.0	4.0			4.0	4.0		4.0	
Lane Util. Factor	1.00	*1.00		1.00	*1.00			*1.00	1.00		*1.00	
Frt	1.00	1.00		1.00	1.00			1.00	1.00		1.00	
Flt Protected	1.00	1.00		1.00	1.00			1.00	1.00		1.00	
Satd. Flow (prot)	1700	3600		1700	3600			3600	1800		3600	
Flt Permitted	1.00	1.00		1.00	1.00			1.00	1.00		1.00	
Satd. Flow (perm)	1700	3600		1700	3600			3600	1800		3600	
Volume (vph)	6	332	8	39	250	9	11	36	204	89	177	34
Peak-hour factor, PHF	0.97	0.97	0.97	0.97	0.97	0.97	0.97	0.97	0.97	0.97	0.97	0.97
Adj. Flow (vph)	6	342	8	40	258	9	11	37	210	92	182	35
RTOR Reduction (vph)	0	2	0	0	3	0	0	0	118	0	14	0
Lane Group Flow (vph)	6	348	0	40	264	0	0	48	92	0	295	0
Turn Type	Perm			Perm			Perm		Perm	Perm		
Protected Phases		4			8			2			6	
Permitted Phases	4			8			2		2	6		
Actuated Green, G (s)	34.0	34.0		34.0	34.0			33.0	33.0		33.0	
Effective Green, g (s)	34.0	34.0		34.0	34.0			33.0	33.0		33.0	
Actuated g/C Ratio	0.45	0.45		0.45	0.45			0.44	0.44		0.44	
Clearance Time (s)	4.0	4.0		4.0	4.0			4.0	4.0		4.0	
Lane Grp Cap (vph)	771	1632		771	1632			1584	792		1584	
v/s Ratio Prot		c0.10			0.07							
v/s Ratio Perm	0.00			0.02				0.01	0.05		0.08	
v/c Ratio	0.01	0.21		0.05	0.16			0.03	0.12		0.19	
Uniform Delay, d1	11.2	12.4		11.5	12.1			11.9	12.4		12.8	
Progression Factor	1.00	1.00		1.00	1.00			1.01	2.17		0.71	
Incremental Delay, d2	0.0	0.3		0.1	0.2			0.0	0.3		0.3	
Delay (s)	11.3	12.7		11.6	12.3			12.0	27.2		9.4	
Level of Service	B	B		B	B			B	C		A	
Approach Delay (s)		12.7			12.2			24.4			9.4	
Approach LOS		B			B			C			A	

Intersection Summary			
HCM Average Control Delay	14.2	HCM Level of Service	B
HCM Volume to Capacity ratio	0.20		
Actuated Cycle Length (s)	75.0	Sum of lost time (s)	8.0
Intersection Capacity Utilization	42.3%	ICU Level of Service	A
Analysis Period (min)	15		

c Critical Lane Group

Movement	EBL	EBT	EBR	WBL	WBT	WBR	NBL	NBT	NBR	SBL	SBT	SBR
Lane Configurations												
Ideal Flow (vphpl)	1800	1800	1800	1800	1800	1800	1800	1800	1800	1800	1800	1800
Total Lost time (s)		4.0			4.0			4.0			4.0	
Lane Util. Factor		*1.00			*1.00			*1.00			*1.00	
Frt		1.00			1.00			1.00			1.00	
Flt Protected		1.00			1.00			1.00			1.00	
Satd. Flow (prot)		3600			3600			3600			3600	
Flt Permitted		1.00			1.00			1.00			1.00	
Satd. Flow (perm)		3600			3600			3600			3600	
Volume (vph)	86	363	17	46	554	38	14	135	66	44	91	103
Peak-hour factor, PHF	0.95	0.95	0.95	0.95	0.95	0.95	0.95	0.95	0.95	0.95	0.95	0.95
Adj. Flow (vph)	91	382	18	48	583	40	15	142	69	46	96	108
RTOR Reduction (vph)	0	4	0	0	7	0	0	41	0	0	65	0
Lane Group Flow (vph)	0	487	0	0	664	0	0	185	0	0	185	0
Turn Type	Perm			Perm			Perm			Perm		
Protected Phases		4			8			2			6	
Permitted Phases	4			8			2			6		
Actuated Green, G (s)		37.0			37.0			30.0			30.0	
Effective Green, g (s)		37.0			37.0			30.0			30.0	
Actuated g/C Ratio		0.49			0.49			0.40			0.40	
Clearance Time (s)		4.0			4.0			4.0			4.0	
Lane Grp Cap (vph)		1776			1776			1440			1440	
v/s Ratio Prot												
v/s Ratio Perm		0.14			0.18			0.05			0.05	
v/c Ratio		0.27			0.37			0.13			0.13	
Uniform Delay, d1		11.1			11.8			14.2			14.2	
Progression Factor		2.11			1.39			1.00			1.91	
Incremental Delay, d2		0.4			0.6			0.2			0.2	
Delay (s)		23.9			17.0			14.4			27.4	
Level of Service		C			B			B			C	
Approach Delay (s)		23.9			17.0			14.4			27.4	
Approach LOS		C			B			B			C	

Intersection Summary			
HCM Average Control Delay	20.3	HCM Level of Service	C
HCM Volume to Capacity ratio	0.26		
Actuated Cycle Length (s)	75.0	Sum of lost time (s)	8.0
Intersection Capacity Utilization	60.1%	ICU Level of Service	B
Analysis Period (min)	15		

c Critical Lane Group

Movement	EBT	EBR	WBL	WBT	NBL	NBR
Lane Configurations						
Ideal Flow (vphpl)	1800	1800	1600	1800	1800	1800
Total Lost time (s)	4.0	4.0	4.0	4.0		
Lane Util. Factor	*1.00	1.00	*1.00	1.00		
Frt	1.00	1.00	1.00	1.00		
Flt Protected	1.00	1.00	1.00	1.00		
Satd. Flow (prot)	3600	1800	3200	1800		
Flt Permitted	1.00	1.00	1.00	1.00		
Satd. Flow (perm)	3600	1800	3200	1800		
Volume (vph)	488	166	678	327	0	0
Peak-hour factor, PHF	0.93	0.93	0.93	0.93	0.93	0.93
Adj. Flow (vph)	525	178	729	352	0	0
RTOR Reduction (vph)	0	94	0	0	0	0
Lane Group Flow (vph)	525	84	729	352	0	0
Turn Type		Perm	Prot			
Protected Phases	4		3	8		
Permitted Phases		4				
Actuated Green, G (s)	30.0	30.0	37.0	75.0		
Effective Green, g (s)	30.0	30.0	37.0	75.0		
Actuated g/C Ratio	0.40	0.40	0.49	1.00		
Clearance Time (s)	4.0	4.0	4.0	4.0		
Lane Grp Cap (vph)	1440	720	1579	1800		
v/s Ratio Prot	c0.15		c0.23	0.20		
v/s Ratio Perm		0.05				
v/c Ratio	0.36	0.12	0.46	0.20		
Uniform Delay, d1	15.8	14.2	12.5	0.0		
Progression Factor	0.80	0.59	1.00	1.00		
Incremental Delay, d2	0.7	0.3	1.0	0.2		
Delay (s)	13.3	8.8	13.4	0.2		
Level of Service	B	A	B	A		
Approach Delay (s)	12.1			9.1	0.0	
Approach LOS	B			A	A	

Intersection Summary			
HCM Average Control Delay	10.3	HCM Level of Service	B
HCM Volume to Capacity ratio	0.42		
Actuated Cycle Length (s)	75.0	Sum of lost time (s)	8.0
Intersection Capacity Utilization	52.9%	ICU Level of Service	A
Analysis Period (min)	15		

c Critical Lane Group

Movement	EBL	EBT	EBR	WBL	WBT	WBR	NBL	NBT	NBR	SBL	SBT	SBR
Lane Configurations												
Ideal Flow (vphpl)	1700	1800	1800	1800	1800	1800	1800	1800	1700	1800	1800	1800
Total Lost time (s)	4.0	4.0			4.0	4.0		4.0	4.0			
Lane Util. Factor	1.00	*1.00			*1.00	1.00		1.00	*1.00			
Frt	1.00	1.00			1.00	1.00		1.00	1.00			
Flt Protected	1.00	1.00			1.00	1.00		1.00	1.00			
Satd. Flow (prot)	1700	3600			5400	1800		1800	3400			
Flt Permitted	1.00	1.00			1.00	1.00		1.00	1.00			
Satd. Flow (perm)	1700	3600			5400	1800		1800	3400			
Volume (vph)	265	201	0	0	922	522	130	1	269	0	0	0
Peak-hour factor, PHF	0.96	0.96	0.96	0.96	0.96	0.96	0.96	0.96	0.96	0.96	0.96	0.96
Adj. Flow (vph)	276	209	0	0	960	544	135	1	280	0	0	0
RTOR Reduction (vph)	0	0	0	0	0	0	0	0	212	0	0	0
Lane Group Flow (vph)	276	209	0	0	960	544	0	136	68	0	0	0
Turn Type	Prot					Free	Split		Prot			
Protected Phases	7	4			8		2	2	2			
Permitted Phases						Free						
Actuated Green, G (s)	28.0	60.0			28.0	90.0		22.0	22.0			
Effective Green, g (s)	28.0	60.0			28.0	90.0		22.0	22.0			
Actuated g/C Ratio	0.31	0.67			0.31	1.00		0.24	0.24			
Clearance Time (s)	4.0	4.0			4.0			4.0	4.0			
Lane Grp Cap (vph)	529	2400			1680	1800		440	831			
v/s Ratio Prot	c0.16	0.06			c0.18			0.08	0.02			
v/s Ratio Perm						c0.30						
v/c Ratio	0.52	0.09			0.57	0.30		0.31	0.08			
Uniform Delay, d1	25.5	5.3			26.0	0.0		27.8	26.2			
Progression Factor	1.00	1.00			1.16	1.00		1.00	1.00			
Incremental Delay, d2	3.7	0.1			1.2	0.4		1.8	0.2			
Delay (s)	29.1	5.4			31.2	0.4		29.6	26.4			
Level of Service	C	A			C	A		C	C			
Approach Delay (s)		18.9			20.1			27.5			0.0	
Approach LOS		B			C			C			A	

Intersection Summary			
HCM Average Control Delay	21.1	HCM Level of Service	C
HCM Volume to Capacity ratio	0.47		
Actuated Cycle Length (s)	90.0	Sum of lost time (s)	8.0
Intersection Capacity Utilization	52.9%	ICU Level of Service	A
Analysis Period (min)	15		

c Critical Lane Group

Movement	EBL	EBT	EBR	WBL	WBT	WBR	NBL	NBT	NBR	SBL	SBT	SBR
Lane Configurations												
Ideal Flow (vphpl)	1700	1800	1800	1700	1800	1800	1700	1800	1800	1700	1800	1800
Total Lost time (s)	4.0	4.0		4.0	4.0		4.0	4.0		4.0	4.0	
Lane Util. Factor	1.00	*1.00		1.00	*1.00		1.00	*1.00		1.00	*1.00	
Frt	1.00	1.00		1.00	1.00		1.00	1.00		1.00	1.00	
Flt Protected	1.00	1.00		1.00	1.00		1.00	1.00		1.00	1.00	
Satd. Flow (prot)	1700	3600		1700	3600		1700	3600		1700	3600	
Flt Permitted	1.00	1.00		1.00	1.00		1.00	1.00		1.00	1.00	
Satd. Flow (perm)	1700	3600		1700	3600		1700	3600		1700	3600	
Volume (vph)	68	84	42	75	64	13	15	311	58	11	153	20
Peak-hour factor, PHF	0.96	0.96	0.96	0.96	0.96	0.96	0.96	0.96	0.96	0.96	0.96	0.96
Adj. Flow (vph)	71	88	44	78	67	14	16	324	60	11	159	21
RTOR Reduction (vph)	0	31	0	0	10	0	0	22	0	0	14	0
Lane Group Flow (vph)	71	101	0	78	71	0	16	362	0	11	166	0
Turn Type	Prot			Prot			Perm			Perm		
Protected Phases	5	2		1	6			8			4	
Permitted Phases							8			4		
Actuated Green, G (s)	14.0	23.0		15.0	24.0		25.0	25.0		25.0	25.0	
Effective Green, g (s)	14.0	23.0		15.0	24.0		25.0	25.0		25.0	25.0	
Actuated g/C Ratio	0.19	0.31		0.20	0.32		0.33	0.33		0.33	0.33	
Clearance Time (s)	4.0	4.0		4.0	4.0		4.0	4.0		4.0	4.0	
Lane Grp Cap (vph)	317	1104		340	1152		567	1200		567	1200	
v/s Ratio Prot	0.04	c0.03		c0.05	0.02			c0.10			0.05	
v/s Ratio Perm							0.01			0.01		
v/c Ratio	0.22	0.09		0.23	0.06		0.03	0.30		0.02	0.14	
Uniform Delay, d1	25.9	18.5		25.2	17.7		16.8	18.5		16.8	17.5	
Progression Factor	1.12	0.90		1.00	1.00		1.00	1.00		1.00	1.00	
Incremental Delay, d2	1.6	0.2		1.6	0.1		0.1	0.6		0.1	0.2	
Delay (s)	30.7	16.8		26.7	17.8		16.9	19.2		16.8	17.7	
Level of Service	C	B		C	B		B	B		B	B	
Approach Delay (s)		21.7			22.2			19.1			17.7	
Approach LOS		C			C			B			B	

Intersection Summary			
HCM Average Control Delay	19.9	HCM Level of Service	B
HCM Volume to Capacity ratio	0.21		
Actuated Cycle Length (s)	75.0	Sum of lost time (s)	12.0
Intersection Capacity Utilization	32.4%	ICU Level of Service	A
Analysis Period (min)	15		

c Critical Lane Group

Movement	EBL	EBT	EBR	WBL	WBT	WBR	NBL	NBT	NBR	SBL	SBT	SBR
Lane Configurations												
Ideal Flow (vphpl)	1700	1800	1800	1700	1800	1800	1700	1800	1800	1700	1800	1800
Total Lost time (s)	4.0	4.0		4.0	4.0		4.0	4.0		4.0	4.0	
Lane Util. Factor	1.00	*1.00		1.00	*1.00		1.00	*1.00		1.00	*1.00	
Frt	1.00	1.00		1.00	1.00		1.00	1.00		1.00	1.00	
Flt Protected	1.00	1.00		1.00	1.00		1.00	1.00		1.00	1.00	
Satd. Flow (prot)	1700	5400		1700	5400		1700	3600		1700	3600	
Flt Permitted	1.00	1.00		1.00	1.00		1.00	1.00		1.00	1.00	
Satd. Flow (perm)	1700	5400		1700	5400		1700	3600		1700	3600	
Volume (vph)	77	319	28	85	986	81	269	194	50	55	146	90
Peak-hour factor, PHF	0.92	0.92	0.92	0.92	0.92	0.92	0.92	0.92	0.92	0.92	0.92	0.92
Adj. Flow (vph)	84	347	30	92	1072	88	292	211	54	60	159	98
RTOR Reduction (vph)	0	13	0	0	12	0	0	27	0	0	79	0
Lane Group Flow (vph)	84	364	0	92	1148	0	292	238	0	60	178	0
Turn Type	Prot			Prot			pm+pt			pm+pt		
Protected Phases	7	4		3	8		5	2		1	6	
Permitted Phases							2			6		
Actuated Green, G (s)	10.0	27.0		11.0	28.0		40.0	29.0		24.0	17.0	
Effective Green, g (s)	10.0	27.0		11.0	28.0		40.0	29.0		24.0	17.0	
Actuated g/C Ratio	0.11	0.30		0.12	0.31		0.44	0.32		0.27	0.19	
Clearance Time (s)	4.0	4.0		4.0	4.0		4.0	4.0		4.0	4.0	
Lane Grp Cap (vph)	189	1620		208	1680		756	1160		453	680	
v/s Ratio Prot	0.05	0.07		c0.05	c0.21		c0.08	0.07		0.01	0.05	
v/s Ratio Perm							0.09			0.03		
v/c Ratio	0.44	0.22		0.44	0.68		0.39	0.21		0.13	0.26	
Uniform Delay, d1	37.4	23.6		36.7	27.1		17.0	22.1		25.1	31.1	
Progression Factor	0.91	0.95		1.00	1.00		1.00	1.00		1.00	1.00	
Incremental Delay, d2	7.3	0.3		6.7	2.3		1.5	0.4		0.6	0.9	
Delay (s)	41.3	22.9		43.3	29.4		18.5	22.5		25.7	32.1	
Level of Service	D	C		D	C		B	C		C	C	
Approach Delay (s)		26.2			30.4			20.4			30.9	
Approach LOS		C			C			C			C	

Intersection Summary			
HCM Average Control Delay	27.6	HCM Level of Service	C
HCM Volume to Capacity ratio	0.48		
Actuated Cycle Length (s)	90.0	Sum of lost time (s)	8.0
Intersection Capacity Utilization	64.1%	ICU Level of Service	C
Analysis Period (min)	15		

c Critical Lane Group

Movement	EBL	EBT	EBR	WBL	WBT	WBR	NBL	NBT	NBR	SBL	SBT	SBR
Lane Configurations												
Ideal Flow (vphpl)	1700	1800	1800	1700	1800	1800	1700	1800	1800	1700	1800	1800
Total Lost time (s)	4.0	4.0		4.0	4.0		4.0	4.0		4.0	4.0	
Lane Util. Factor	1.00	*1.00		1.00	*1.00		1.00	*1.00		1.00	*1.00	
Frt	1.00	1.00		1.00	1.00		1.00	1.00		1.00	1.00	
Flt Protected	1.00	1.00		1.00	1.00		1.00	1.00		1.00	1.00	
Satd. Flow (prot)	1700	3600		1700	3600		1700	3600		1700	3600	
Flt Permitted	1.00	1.00		1.00	1.00		1.00	1.00		1.00	1.00	
Satd. Flow (perm)	1700	3600		1700	3600		1700	3600		1700	3600	
Volume (vph)	55	338	25	23	498	152	54	174	13	40	93	70
Peak-hour factor, PHF	0.87	0.87	0.87	0.87	0.87	0.87	0.87	0.87	0.87	0.87	0.87	0.87
Adj. Flow (vph)	63	389	29	26	572	175	62	200	15	46	107	80
RTOR Reduction (vph)	0	8	0	0	42	0	0	8	0	0	48	0
Lane Group Flow (vph)	63	410	0	26	705	0	62	207	0	46	139	0
Turn Type	Perm			Perm			Perm			Perm		
Protected Phases		4			8			2			6	
Permitted Phases	4			8			2			6		
Actuated Green, G (s)	37.0	37.0		37.0	37.0		30.0	30.0		30.0	30.0	
Effective Green, g (s)	37.0	37.0		37.0	37.0		30.0	30.0		30.0	30.0	
Actuated g/C Ratio	0.49	0.49		0.49	0.49		0.40	0.40		0.40	0.40	
Clearance Time (s)	4.0	4.0		4.0	4.0		4.0	4.0		4.0	4.0	
Lane Grp Cap (vph)	839	1776		839	1776		680	1440		680	1440	
v/s Ratio Prot		0.11			c0.20			c0.06			0.04	
v/s Ratio Perm	0.04			0.02			0.04			0.03		
v/c Ratio	0.08	0.23		0.03	0.40		0.09	0.14		0.07	0.10	
Uniform Delay, d1	10.0	10.9		9.8	12.0		14.0	14.3		13.9	14.0	
Progression Factor	1.26	1.09		0.64	0.85		1.00	1.00		1.00	1.00	
Incremental Delay, d2	0.2	0.3		0.1	0.6		0.3	0.2		0.2	0.1	
Delay (s)	12.7	12.1		6.4	10.9		14.3	14.5		14.1	14.2	
Level of Service	B	B		A	B		B	B		B	B	
Approach Delay (s)		12.2			10.7			14.5			14.2	
Approach LOS		B			B			B			B	

Intersection Summary			
HCM Average Control Delay	12.2	HCM Level of Service	B
HCM Volume to Capacity ratio	0.28		
Actuated Cycle Length (s)	75.0	Sum of lost time (s)	8.0
Intersection Capacity Utilization	45.2%	ICU Level of Service	A
Analysis Period (min)	15		

c Critical Lane Group

Movement	EBL	EBT	EBR	WBL	WBT	WBR	NBL	NBT	NBR	SBL	SBT	SBR
Lane Configurations												
Sign Control		Stop			Stop			Free			Free	
Grade		0%			0%			0%			0%	
Volume (veh/h)	2	0	2	0	0	0	0	210	0	0	197	0
Peak Hour Factor	0.95	0.95	0.95	0.95	0.95	0.95	0.95	0.95	0.95	0.95	0.95	0.95
Hourly flow rate (vph)	2	0	2	0	0	0	0	221	0	0	207	0
Pedestrians												
Lane Width (ft)												
Walking Speed (ft/s)												
Percent Blockage												
Right turn flare (veh)												
Median type		None			None							
Median storage veh)												
Upstream signal (ft)											929	
pX, platoon unblocked												
vC, conflicting volume	318	428	104	327	428	111	207			221		
vC1, stage 1 conf vol												
vC2, stage 2 conf vol												
vCu, unblocked vol	318	428	104	327	428	111	207			221		
tC, single (s)	7.5	6.5	6.9	7.5	6.5	6.9	4.1			4.1		
tC, 2 stage (s)												
tF (s)	3.5	4.0	3.3	3.5	4.0	3.3	2.2			2.2		
p0 queue free %	100	100	100	100	100	100	100			100		
cM capacity (veh/h)	617	522	937	606	522	928	1376			1360		

Direction, Lane #	EB 1	WB 1	NB 1	NB 2	SB 1	SB 2
Volume Total	4	0	111	111	104	104
Volume Left	2	0	0	0	0	0
Volume Right	2	0	0	0	0	0
cSH	744	1700	1376	1700	1360	1700
Volume to Capacity	0.01	0.00	0.00	0.07	0.00	0.06
Queue Length 95th (ft)	0	0	0	0	0	0
Control Delay (s)	9.9	0.0	0.0	0.0	0.0	0.0
Lane LOS	A	A				
Approach Delay (s)	9.9	0.0	0.0		0.0	
Approach LOS	A	A				

Intersection Summary			
Average Delay	0.1		
Intersection Capacity Utilization	16.1%	ICU Level of Service	A
Analysis Period (min)	15		

Movement	EBL	EBT	EBR	WBL	WBT	WBR	NBL	NBT	NBR	SBL	SBT	SBR
Lane Configurations												
Ideal Flow (vphpl)	1700	1800	1800	1700	1800	1800	1700	1800	1800	1700	1800	1800
Total Lost time (s)	4.0	4.0		4.0	4.0		4.0	4.0	4.0	4.0	4.0	4.0
Lane Util. Factor	1.00	*1.00		1.00	*1.00		1.00	1.00	1.00	1.00	*1.00	1.00
Frt	1.00	1.00		1.00	1.00		1.00	1.00	1.00	1.00	1.00	1.00
Flt Protected	1.00	1.00		1.00	1.00		1.00	1.00	1.00	1.00	1.00	1.00
Satd. Flow (prot)	1700	3600		1700	5400		1700	1800	1800	1700	3600	1800
Flt Permitted	1.00	1.00		1.00	1.00		1.00	1.00	1.00	1.00	1.00	1.00
Satd. Flow (perm)	1700	3600		1700	5400		1700	1800	1800	1700	3600	1800
Volume (vph)	138	536	50	88	886	26	102	335	96	36	266	173
Peak-hour factor, PHF	0.89	0.89	0.89	0.89	0.89	0.89	0.89	0.89	0.89	0.89	0.89	0.89
Adj. Flow (vph)	155	602	56	99	996	29	115	376	108	40	299	194
RTOR Reduction (vph)	0	10	0	0	5	0	0	0	73	0	0	132
Lane Group Flow (vph)	155	648	0	99	1020	0	115	376	35	40	299	62
Turn Type	Prot			Prot			pm+pt		Perm	pm+pt		Perm
Protected Phases	7	4		3	8		5	2		1	6	
Permitted Phases							2		2	6		6
Actuated Green, G (s)	11.0	21.0		8.0	18.0		30.0	24.0	24.0	30.0	24.0	24.0
Effective Green, g (s)	11.0	21.0		8.0	18.0		30.0	24.0	24.0	30.0	24.0	24.0
Actuated g/C Ratio	0.15	0.28		0.11	0.24		0.40	0.32	0.32	0.40	0.32	0.32
Clearance Time (s)	4.0	4.0		4.0	4.0		4.0	4.0	4.0	4.0	4.0	4.0
Lane Grp Cap (vph)	249	1008		181	1296		771	576	576	771	1152	576
v/s Ratio Prot	c0.09	c0.18		0.06	c0.19		c0.01	c0.21		0.00	0.08	
v/s Ratio Perm							0.06		0.02	0.02		0.03
v/c Ratio	0.62	0.64		0.55	0.79		0.15	0.65	0.06	0.05	0.26	0.11
Uniform Delay, d1	30.1	23.7		31.8	26.7		14.5	21.9	17.7	14.4	18.9	18.0
Progression Factor	1.00	1.00		1.00	1.00		1.34	1.06	1.97	1.00	1.00	1.00
Incremental Delay, d2	11.2	3.2		11.4	4.9		0.4	5.0	0.2	0.1	0.5	0.4
Delay (s)	41.2	26.9		43.2	31.6		19.7	28.3	35.1	14.6	19.5	18.3
Level of Service	D	C		D	C		B	C	D	B	B	B
Approach Delay (s)		29.6			32.6			27.9			18.7	
Approach LOS		C			C			C			B	

Intersection Summary			
HCM Average Control Delay	28.5	HCM Level of Service	C
HCM Volume to Capacity ratio	0.68		
Actuated Cycle Length (s)	75.0	Sum of lost time (s)	20.0
Intersection Capacity Utilization	62.5%	ICU Level of Service	B
Analysis Period (min)	15		

c Critical Lane Group

Movement	EBL	EBT	EBR	WBL	WBT	WBR	NBL	NBT	NBR	SBL	SBT	SBR
Lane Configurations												
Ideal Flow (vphpl)	1700	1800	1800	1700	1800	1800	1700	1800	1800	1700	1800	1800
Total Lost time (s)	4.0	4.0		4.0	4.0		4.0	4.0		4.0	4.0	
Lane Util. Factor	1.00	*1.00		1.00	*1.00		1.00	*1.00		1.00	*1.00	
Frt	1.00	1.00		1.00	1.00		1.00	1.00		1.00	1.00	
Flt Protected	1.00	1.00		1.00	1.00		1.00	1.00		1.00	1.00	
Satd. Flow (prot)	1700	3600		1700	3600		1700	3600		1700	3600	
Flt Permitted	1.00	1.00		1.00	1.00		1.00	1.00		1.00	1.00	
Satd. Flow (perm)	1700	3600		1700	3600		1700	3600		1700	3600	
Volume (vph)	19	316	88	83	495	22	109	554	69	28	360	45
Peak-hour factor, PHF	0.96	0.96	0.96	0.96	0.96	0.96	0.96	0.96	0.96	0.96	0.96	0.96
Adj. Flow (vph)	20	329	92	86	516	23	114	577	72	29	375	47
RTOR Reduction (vph)	0	37	0	0	5	0	0	14	0	0	14	0
Lane Group Flow (vph)	20	384	0	86	534	0	114	635	0	29	408	0
Turn Type	Perm			Perm			pm+pt			pm+pt		
Protected Phases		4			8		5	2		1	6	
Permitted Phases	4			8			2			6		
Actuated Green, G (s)	24.0	24.0		24.0	24.0		39.0	26.0		39.0	26.0	
Effective Green, g (s)	24.0	24.0		24.0	24.0		39.0	26.0		39.0	26.0	
Actuated g/C Ratio	0.32	0.32		0.32	0.32		0.52	0.35		0.52	0.35	
Clearance Time (s)	4.0	4.0		4.0	4.0		4.0	4.0		4.0	4.0	
Lane Grp Cap (vph)	544	1152		544	1152		975	1248		975	1248	
v/s Ratio Prot		0.11			c0.15		c0.02	c0.18		0.01	0.11	
v/s Ratio Perm	0.01			0.05			0.05			0.01		
v/c Ratio	0.04	0.33		0.16	0.46		0.12	0.51		0.03	0.33	
Uniform Delay, d1	17.5	19.4		18.3	20.4		9.3	19.4		9.1	18.1	
Progression Factor	1.21	1.42		0.72	0.77		1.00	1.00		0.79	0.74	
Incremental Delay, d2	0.1	0.8		0.6	1.3		0.2	1.5		0.1	0.7	
Delay (s)	21.3	28.3		13.7	16.9		9.5	20.9		7.3	14.1	
Level of Service	C	C		B	B		A	C		A	B	
Approach Delay (s)		28.0			16.5			19.2			13.7	
Approach LOS		C			B			B			B	

Intersection Summary			
HCM Average Control Delay	19.1	HCM Level of Service	B
HCM Volume to Capacity ratio	0.41		
Actuated Cycle Length (s)	75.0	Sum of lost time (s)	12.0
Intersection Capacity Utilization	53.7%	ICU Level of Service	A
Analysis Period (min)	15		

c Critical Lane Group

Movement	EBL	EBT	EBR	WBL	WBT	WBR	NBL	NBT	NBR	SBL	SBT	SBR
Lane Configurations												
Ideal Flow (vphpl)	1700	1800	1800	1700	1800	1800	1700	1800	1800	1700	1800	1800
Total Lost time (s)	4.0	4.0		4.0	4.0		4.0	4.0		4.0	4.0	
Lane Util. Factor	1.00	*1.00		1.00	*1.00		1.00	*1.00		1.00	*1.00	
Frt	1.00	1.00		1.00	1.00		1.00	1.00		1.00	1.00	
Flt Protected	1.00	1.00		1.00	1.00		1.00	1.00		1.00	1.00	
Satd. Flow (prot)	1700	3600		1700	3600		1700	3600		1700	3600	
Flt Permitted	1.00	1.00		1.00	1.00		1.00	1.00		1.00	1.00	
Satd. Flow (perm)	1700	3600		1700	3600		1700	3600		1700	3600	
Volume (vph)	34	289	61	25	349	16	85	373	44	14	274	52
Peak-hour factor, PHF	0.79	0.79	0.79	0.79	0.79	0.79	0.79	0.79	0.79	0.79	0.79	0.79
Adj. Flow (vph)	43	366	77	32	442	20	108	472	56	18	347	66
RTOR Reduction (vph)	0	26	0	0	4	0	0	13	0	0	22	0
Lane Group Flow (vph)	43	417	0	32	458	0	108	515	0	18	391	0
Turn Type	Perm			Perm			Perm			Perm		
Protected Phases		4			8			2			6	
Permitted Phases	4			8			2			6		
Actuated Green, G (s)	34.0	34.0		34.0	34.0		33.0	33.0		33.0	33.0	
Effective Green, g (s)	34.0	34.0		34.0	34.0		33.0	33.0		33.0	33.0	
Actuated g/C Ratio	0.45	0.45		0.45	0.45		0.44	0.44		0.44	0.44	
Clearance Time (s)	4.0	4.0		4.0	4.0		4.0	4.0		4.0	4.0	
Lane Grp Cap (vph)	771	1632		771	1632		748	1584		748	1584	
v/s Ratio Prot		0.12			c0.13			c0.14			0.11	
v/s Ratio Perm	0.03			0.02			0.06			0.01		
v/c Ratio	0.06	0.26		0.04	0.28		0.14	0.33		0.02	0.25	
Uniform Delay, d1	11.5	12.7		11.4	12.8		12.6	13.7		11.9	13.2	
Progression Factor	1.07	1.22		1.00	1.00		1.00	1.00		1.00	1.00	
Incremental Delay, d2	0.1	0.4		0.1	0.4		0.4	0.5		0.1	0.4	
Delay (s)	12.4	15.8		11.5	13.3		13.0	14.3		11.9	13.6	
Level of Service	B	B		B	B		B	B		B	B	
Approach Delay (s)		15.5			13.2			14.0			13.5	
Approach LOS		B			B			B			B	

Intersection Summary			
HCM Average Control Delay	14.1	HCM Level of Service	B
HCM Volume to Capacity ratio	0.30		
Actuated Cycle Length (s)	75.0	Sum of lost time (s)	8.0
Intersection Capacity Utilization	43.1%	ICU Level of Service	A
Analysis Period (min)	15		

c Critical Lane Group

Movement	EBL	EBT	EBR	WBL	WBT	WBR	NBL	NBT	NBR	SBL	SBT	SBR
Lane Configurations												
Ideal Flow (vphpl)	1700	1800	1800	1700	1800	1800	1700	1800	1800	1700	1800	1800
Total Lost time (s)	4.0	4.0	4.0	4.0	4.0		4.0	4.0		4.0	4.0	4.0
Lane Util. Factor	1.00	*1.00	1.00	1.00	*1.00		1.00	*1.00		1.00	*1.00	1.00
Frt	1.00	1.00	1.00	1.00	1.00		1.00	1.00		1.00	1.00	1.00
Flt Protected	1.00	1.00	1.00	1.00	1.00		1.00	1.00		1.00	1.00	1.00
Satd. Flow (prot)	1700	3600	1800	1700	3600		1700	3600		1700	3600	1800
Flt Permitted	1.00	1.00	1.00	1.00	1.00		1.00	1.00		1.00	1.00	1.00
Satd. Flow (perm)	1700	3600	1800	1700	3600		1700	3600		1700	3600	1800
Volume (vph)	58	444	217	66	810	37	397	269	50	32	179	125
Peak-hour factor, PHF	0.83	0.83	0.83	0.83	0.83	0.83	0.83	0.83	0.83	0.83	0.83	0.83
Adj. Flow (vph)	70	535	261	80	976	45	478	324	60	39	216	151
RTOR Reduction (vph)	0	0	185	0	6	0	0	25	0	0	0	112
Lane Group Flow (vph)	70	535	76	80	1015	0	478	359	0	39	216	39
Turn Type	Prot		Perm	Prot			pm+pt			pm+pt		Perm
Protected Phases	7	4		3	8		5	2		1	6	
Permitted Phases			4				2			6		6
Actuated Green, G (s)	6.0	19.0	19.0	7.0	20.0		23.0	17.0		23.0	17.0	17.0
Effective Green, g (s)	6.0	19.0	19.0	7.0	20.0		23.0	17.0		23.0	17.0	17.0
Actuated g/C Ratio	0.09	0.29	0.29	0.11	0.31		0.35	0.26		0.35	0.26	0.26
Clearance Time (s)	4.0	4.0	4.0	4.0	4.0		4.0	4.0		4.0	4.0	4.0
Lane Grp Cap (vph)	157	1052	526	183	1108		706	942		706	942	471
v/s Ratio Prot	0.04	0.15		c0.05	c0.28		c0.06	0.10		0.01	0.06	
v/s Ratio Perm			0.04				0.22			0.02		0.02
v/c Ratio	0.45	0.51	0.15	0.44	0.92		0.68	0.38		0.06	0.23	0.08
Uniform Delay, d1	27.9	19.1	17.0	27.2	21.7		18.9	19.7		13.9	18.9	18.1
Progression Factor	1.00	1.00	1.00	1.00	1.00		1.00	1.00		1.00	1.00	1.00
Incremental Delay, d2	8.9	1.8	0.6	7.4	13.2		5.2	1.2		0.1	0.6	0.3
Delay (s)	36.8	20.9	17.6	34.6	34.9		24.0	20.9		14.1	19.4	18.5
Level of Service	D	C	B	C	C		C	C		B	B	B
Approach Delay (s)		21.2			34.9			22.6			18.6	
Approach LOS		C			C			C			B	

Intersection Summary			
HCM Average Control Delay	25.9	HCM Level of Service	C
HCM Volume to Capacity ratio	0.70		
Actuated Cycle Length (s)	65.0	Sum of lost time (s)	8.0
Intersection Capacity Utilization	71.6%	ICU Level of Service	C
Analysis Period (min)	15		

c Critical Lane Group

Movement	EBL	EBT	WBT	WBR	SBL	SBR
Lane Configurations						
Sign Control		Free	Free		Stop	
Grade		0%	0%		0%	
Volume (veh/h)	40	355	548	36	24	77
Peak Hour Factor	0.90	0.90	0.90	0.90	0.90	0.90
Hourly flow rate (vph)	44	394	609	40	27	86
Pedestrians						
Lane Width (ft)						
Walking Speed (ft/s)						
Percent Blockage						
Right turn flare (veh)						
Median type					None	
Median storage veh)						
Upstream signal (ft)		669	705			
pX, platoon unblocked	0.93				0.93	0.93
vC, conflicting volume	649				915	324
vC1, stage 1 conf vol	0					
vC2, stage 2 conf vol	0					
vCu, unblocked vol	542				829	191
tC, single (s)	4.1				6.8	6.9
tC, 2 stage (s)	3.1					
tF (s)	2.2				3.5	3.3
p0 queue free %	95				90	89
cM capacity (veh/h)	883				275	764

Direction, Lane #	EB 1	EB 2	WB 1	WB 2	SB 1	SB 2
Volume Total	176	263	406	243	27	86
Volume Left	44	0	0	0	27	0
Volume Right	0	0	0	40	0	86
cSH	883	1700	1700	1700	275	764
Volume to Capacity	0.05	0.15	0.24	0.14	0.10	0.11
Queue Length 95th (ft)	4	0	0	0	8	9
Control Delay (s)	2.7	0.0	0.0	0.0	19.5	10.3
Lane LOS	A				C	B
Approach Delay (s)	1.1		0.0		12.5	
Approach LOS					B	

Intersection Summary			
Average Delay	1.6		
Intersection Capacity Utilization	42.1%	ICU Level of Service	A
Analysis Period (min)	15		

Movement	EBL	EBT	EBR	WBL	WBT	WBR	NBL	NBT	NBR	SBL	SBT	SBR
Lane Configurations												
Ideal Flow (vphpl)	1700	1800	1800	1700	1800	1800	1700	1800	1800	1700	1800	1800
Total Lost time (s)	4.0	4.0		4.0	4.0		4.0	4.0	4.0	4.0	4.0	4.0
Lane Util. Factor	1.00	*1.00		1.00	*1.00		1.00	1.00	1.00	1.00	1.00	1.00
Frt	1.00	1.00		1.00	1.00		1.00	1.00	1.00	1.00	1.00	1.00
Flt Protected	1.00	1.00		1.00	1.00		1.00	1.00	1.00	1.00	1.00	1.00
Satd. Flow (prot)	1700	3600		1700	3600		1700	1800	1800	1700	1800	1800
Flt Permitted	1.00	1.00		1.00	1.00		1.00	1.00	1.00	1.00	1.00	1.00
Satd. Flow (perm)	1700	3600		1700	3600		1700	1800	1800	1700	1800	1800
Volume (vph)	28	453	43	49	778	60	94	354	44	29	305	45
Peak-hour factor, PHF	0.89	0.89	0.89	0.89	0.89	0.89	0.89	0.89	0.89	0.89	0.89	0.89
Adj. Flow (vph)	31	509	48	55	874	67	106	398	49	33	343	51
RTOR Reduction (vph)	0	13	0	0	10	0	0	0	29	0	0	30
Lane Group Flow (vph)	31	544	0	55	931	0	106	398	20	33	343	21
Turn Type	Perm			Perm			Perm		Perm	Perm		Perm
Protected Phases		4			8			2			6	
Permitted Phases	4			8			2		2	6		6
Actuated Green, G (s)	27.0	27.0		27.0	27.0		25.0	25.0	25.0	25.0	25.0	25.0
Effective Green, g (s)	27.0	27.0		27.0	27.0		25.0	25.0	25.0	25.0	25.0	25.0
Actuated g/C Ratio	0.45	0.45		0.45	0.45		0.42	0.42	0.42	0.42	0.42	0.42
Clearance Time (s)	4.0	4.0		4.0	4.0		4.0	4.0	4.0	4.0	4.0	4.0
Lane Grp Cap (vph)	765	1620		765	1620		708	750	750	708	750	750
v/s Ratio Prot		0.15			c0.26			c0.22			0.19	
v/s Ratio Perm	0.02			0.03			0.06		0.01	0.02		0.01
v/c Ratio	0.04	0.34		0.07	0.57		0.15	0.53	0.03	0.05	0.46	0.03
Uniform Delay, d1	9.2	10.7		9.4	12.2		10.9	13.1	10.3	10.4	12.6	10.3
Progression Factor	1.00	1.00		1.00	1.00		0.48	0.38	0.36	1.00	1.00	1.00
Incremental Delay, d2	0.1	0.6		0.2	1.5		0.3	2.1	0.1	0.1	2.0	0.1
Delay (s)	9.3	11.3		9.6	13.7		5.6	7.1	3.7	10.5	14.6	10.4
Level of Service	A	B		A	B		A	A	A	B	B	B
Approach Delay (s)		11.2			13.5			6.5			13.8	
Approach LOS		B			B			A			B	

Intersection Summary			
HCM Average Control Delay	11.5	HCM Level of Service	B
HCM Volume to Capacity ratio	0.55		
Actuated Cycle Length (s)	60.0	Sum of lost time (s)	8.0
Intersection Capacity Utilization	64.4%	ICU Level of Service	C
Analysis Period (min)	15		

c Critical Lane Group

Movement	EBL	EBT	EBR	WBL	WBT	WBR	NBL	NBT	NBR	SBL	SBT	SBR
Lane Configurations												
Ideal Flow (vphpl)	1700	1800	1800	1700	1800	1800	1700	1800	1800	1700	1800	1800
Total Lost time (s)	4.0	4.0		4.0	4.0		4.0	4.0	4.0	4.0	4.0	4.0
Lane Util. Factor	1.00	*1.00		1.00	*1.00		1.00	1.00	1.00	1.00	1.00	1.00
Frt	1.00	1.00		1.00	1.00		1.00	1.00	1.00	1.00	1.00	1.00
Flt Protected	1.00	1.00		1.00	1.00		1.00	1.00	1.00	1.00	1.00	1.00
Satd. Flow (prot)	1700	3600		1700	3600		1700	1800	1800	1700	1800	1800
Flt Permitted	1.00	1.00		1.00	1.00		1.00	1.00	1.00	1.00	1.00	1.00
Satd. Flow (perm)	1700	3600		1700	3600		1700	1800	1800	1700	1800	1800
Volume (vph)	8	76	48	49	173	13	59	475	24	11	367	36
Peak-hour factor, PHF	0.92	0.92	0.92	0.92	0.92	0.92	0.92	0.92	0.92	0.92	0.92	0.92
Adj. Flow (vph)	9	83	52	53	188	14	64	516	26	12	399	39
RTOR Reduction (vph)	0	38	0	0	10	0	0	0	15	0	0	29
Lane Group Flow (vph)	9	97	0	53	192	0	64	516	11	12	399	10
Turn Type	pm+pt			pm+pt			pm+pt		Perm	Perm		Perm
Protected Phases	7	4		3	8		5	2			6	
Permitted Phases	4			8			2		2	6		6
Actuated Green, G (s)	22.0	16.0		22.0	16.0		26.0	26.0	26.0	16.0	16.0	16.0
Effective Green, g (s)	22.0	16.0		22.0	16.0		26.0	26.0	26.0	16.0	16.0	16.0
Actuated g/C Ratio	0.37	0.27		0.37	0.27		0.43	0.43	0.43	0.27	0.27	0.27
Clearance Time (s)	4.0	4.0		4.0	4.0		4.0	4.0	4.0	4.0	4.0	4.0
Lane Grp Cap (vph)	737	960		737	960		737	780	780	453	480	480
v/s Ratio Prot	0.00	0.03		c0.01	c0.05		0.01	c0.29			c0.22	
v/s Ratio Perm	0.00			0.02			0.03		0.01	0.01		0.01
v/c Ratio	0.01	0.10		0.07	0.20		0.09	0.66	0.01	0.03	0.83	0.02
Uniform Delay, d1	12.1	16.6		12.4	17.0		11.3	13.5	9.7	16.2	20.7	16.2
Progression Factor	1.00	1.00		1.00	1.00		1.00	1.00	1.00	1.76	1.66	2.77
Incremental Delay, d2	0.0	0.2		0.2	0.5		0.2	4.4	0.0	0.1	14.5	0.1
Delay (s)	12.1	16.8		12.6	17.5		11.6	17.9	9.7	28.7	49.0	45.0
Level of Service	B	B		B	B		B	B	A	C	D	D
Approach Delay (s)		16.5			16.5			16.9			48.1	
Approach LOS		B			B			B			D	

Intersection Summary			
HCM Average Control Delay	26.4	HCM Level of Service	C
HCM Volume to Capacity ratio	0.50		
Actuated Cycle Length (s)	60.0	Sum of lost time (s)	16.0
Intersection Capacity Utilization	51.9%	ICU Level of Service	A
Analysis Period (min)	15		

c Critical Lane Group

Movement	EBL	EBT	EBR	EBR2	WBL2	WBL	WBT	WBR	NBL2	NBL	NBT	NBR
Lane Configurations												
Ideal Flow (vphpl)	1700	1800	1800	1800	1600	1600	1800	1800	1600	1600	1800	1800
Total Lost time (s)	4.0	4.0	4.0			4.0	4.0			4.0	4.0	4.0
Lane Util. Factor	1.00	*1.00	*1.00			*1.00	*1.00			*1.00	*1.00	1.00
Frt	1.00	1.00	1.00			1.00	1.00			1.00	1.00	1.00
Flt Protected	1.00	1.00	1.00			1.00	1.00			1.00	1.00	1.00
Satd. Flow (prot)	1700	3600	1800			3200	3600			3200	3600	1800
Flt Permitted	1.00	1.00	1.00			1.00	1.00			1.00	1.00	1.00
Satd. Flow (perm)	1700	3600	1800			3200	3600			3200	3600	1800
Volume (vph)	101	313	76	5	76	243	433	27	37	151	496	103
Peak-hour factor, PHF	0.93	0.93	0.93	0.93	0.93	0.93	0.93	0.93	0.93	0.93	0.93	0.93
Adj. Flow (vph)	109	337	82	5	82	261	466	29	40	162	533	111
RTOR Reduction (vph)	0	0	2	0	0	0	5	0	0	0	0	89
Lane Group Flow (vph)	109	337	85	0	0	343	490	0	0	202	533	22
Turn Type	Prot		Perm		Prot	Prot			Prot	Prot		Perm
Protected Phases	5	2			1	1	6		3	3	8	
Permitted Phases			2									8
Actuated Green, G (s)	9.0	17.0	17.0			13.0	21.0			8.0	18.0	18.0
Effective Green, g (s)	9.0	17.0	17.0			13.0	21.0			8.0	18.0	18.0
Actuated g/C Ratio	0.10	0.19	0.19			0.14	0.23			0.09	0.20	0.20
Clearance Time (s)	4.0	4.0	4.0			4.0	4.0			4.0	4.0	4.0
Lane Grp Cap (vph)	170	680	340			462	840			284	720	360
v/s Ratio Prot	0.06	0.09				c0.11	c0.14			c0.06	c0.15	
v/s Ratio Perm			0.05									0.01
v/c Ratio	0.64	0.50	0.25			0.74	0.58			0.71	0.74	0.06
Uniform Delay, d1	38.9	32.7	31.1			36.9	30.6			39.9	33.8	29.2
Progression Factor	1.00	1.00	1.00			1.00	1.00			1.00	1.00	1.00
Incremental Delay, d2	17.1	2.6	1.7			10.3	2.9			14.1	6.7	0.3
Delay (s)	56.1	35.2	32.8			47.2	33.6			54.0	40.5	29.5
Level of Service	E	D	C			D	C			D	D	C
Approach Delay (s)		39.1					39.1				42.3	
Approach LOS		D					D				D	

Intersection Summary			
HCM Average Control Delay	39.2	HCM Level of Service	D
HCM Volume to Capacity ratio	0.59		
Actuated Cycle Length (s)	90.0	Sum of lost time (s)	16.0
Intersection Capacity Utilization	64.2%	ICU Level of Service	C
Analysis Period (min)	15		

c Critical Lane Group

Movement	SBL	SBT	SBR	SBR2	NEL2	NEL	NER	NER2
Lane Configurations								
Ideal Flow (vphpl)	1700	1800	1800	1800	1600	1600	1800	1800
Total Lost time (s)	4.0	4.0	4.0			4.0	4.0	
Lane Util. Factor	1.00	*1.00	*1.00			*1.00	*1.00	
Frt	1.00	1.00	1.00			1.00	1.00	
Flt Protected	1.00	1.00	1.00			1.00	1.00	
Satd. Flow (prot)	1700	3600	1800			3200	3600	
Flt Permitted	1.00	1.00	1.00			1.00	1.00	
Satd. Flow (perm)	1700	3600	1800			3200	3600	
Volume (vph)	26	348	110	77	15	144	179	45
Peak-hour factor, PHF	0.93	0.93	0.93	0.93	0.93	0.93	0.93	0.93
Adj. Flow (vph)	28	374	118	83	16	155	192	48
RTOR Reduction (vph)	0	0	28	0	0	0	26	0
Lane Group Flow (vph)	28	374	173	0	0	171	214	0
Turn Type	Prot		Perm		Split		Perm	
Protected Phases	7	4			9	9		
Permitted Phases			4				9	
Actuated Green, G (s)	6.0	16.0	16.0			16.0	16.0	
Effective Green, g (s)	6.0	16.0	16.0			16.0	16.0	
Actuated g/C Ratio	0.07	0.18	0.18			0.18	0.18	
Clearance Time (s)	4.0	4.0	4.0			4.0	4.0	
Lane Grp Cap (vph)	113	640	320			569	640	
v/s Ratio Prot	0.02	0.10				0.05		
v/s Ratio Perm			0.10				c0.06	
v/c Ratio	0.25	0.58	0.54			0.30	0.33	
Uniform Delay, d1	39.9	33.9	33.7			32.1	32.3	
Progression Factor	1.00	1.00	1.00			1.00	1.00	
Incremental Delay, d2	5.2	3.9	6.4			1.4	1.4	
Delay (s)	45.0	37.8	40.1			33.5	33.7	
Level of Service	D	D	D			C	C	
Approach Delay (s)		38.9				33.6		
Approach LOS		D				C		

Intersection Summary

OPENING YEAR (2014) NO PROJECT CONDITIONS

AM PEAK HOUR

Movement	EBL	EBT	EBR	WBL	WBT	WBR	NBL	NBT	NBR	SBL	SBT	SBR
Lane Configurations												
Sign Control		Free			Free			Stop			Stop	
Grade		0%			0%			0%			0%	
Volume (veh/h)	1	138	1	33	75	1	9	9	17	0	0	0
Peak Hour Factor	0.90	0.90	0.90	0.90	0.90	0.90	0.90	0.90	0.90	0.90	0.90	0.90
Hourly flow rate (vph)	1	153	1	37	83	1	10	10	19	0	0	0
Pedestrians												
Lane Width (ft)												
Walking Speed (ft/s)												
Percent Blockage												
Right turn flare (veh)												
Median type								None			None	
Median storage veh)												
Upstream signal (ft)												
pX, platoon unblocked												
vC, conflicting volume	84			154			313	313	77	260	314	84
vC1, stage 1 conf vol												
vC2, stage 2 conf vol												
vCu, unblocked vol	84			154			313	313	77	260	314	84
tC, single (s)	4.1			4.1			7.5	6.5	6.9	7.5	6.5	6.9
tC, 2 stage (s)												
tF (s)	2.2			2.2			3.5	4.0	3.3	3.5	4.0	3.3
p0 queue free %	100			97			98	98	98	100	100	100
cM capacity (veh/h)	1525			1438			609	589	975	642	589	965

Direction, Lane #	EB 1	EB 2	EB 3	WB 1	NB 1
Volume Total	52	102	1	121	39
Volume Left	1	0	0	37	10
Volume Right	0	0	1	1	19
cSH	1525	1700	1700	1438	737
Volume to Capacity	0.00	0.06	0.00	0.03	0.05
Queue Length 95th (ft)	0	0	0	2	4
Control Delay (s)	0.2	0.0	0.0	2.4	10.2
Lane LOS	A			A	B
Approach Delay (s)	0.1			2.4	10.2
Approach LOS					B

Intersection Summary			
Average Delay	2.2		
Intersection Capacity Utilization	23.5%	ICU Level of Service	A
Analysis Period (min)	15		

Year 2014 No Build AM Peak Hour
City of San Bernardino
Redlands First Mile

Level Of Service Computation Report
2000 HCM 4-Way Stop Method (Base Volume Alternative)

Intersection #2 K St and 2nd St

Cycle (sec):	100	Critical Vol./Cap.(X):	0.228
Loss Time (sec):	0 (Y+R=4.0 sec)	Average Delay (sec/veh):	8.8
Optimal Cycle:	0	Level Of Service:	A

Street Name:	K St						2nd St					
Approach:	North Bound			South Bound			East Bound			West Bound		
Movement:	L	T	R	L	T	R	L	T	R	L	T	R
Control:	Stop Sign			Stop Sign			Stop Sign			Stop Sign		
Rights:	Include			Include			Include			Include		
Min. Green:	0	0	0	0	0	0	0	0	0	0	0	0
Lanes:	0 0	1!	0 0	0 0	1!	0 0	1 0	1 1	0	1 0	1 1	0
Volume Module:												
Base Vol:	17	3	45	9	26	13	9	288	14	41	186	22
Growth Adj:	1.00	1.00	1.00	1.00	1.00	1.00	1.00	1.00	1.00	1.00	1.00	1.00
Initial Bse:	17	3	45	9	26	13	9	288	14	41	186	22
User Adj:	1.00	1.00	1.00	1.00	1.00	1.00	1.00	1.00	1.00	1.00	1.00	1.00
PHF Adj:	0.94	0.94	0.94	0.94	0.94	0.94	0.94	0.94	0.94	0.94	0.94	0.94
PHF Volume:	18	3	48	10	28	14	10	306	15	44	198	23
Reduct Vol:	0	0	0	0	0	0	0	0	0	0	0	0
Reduced Vol:	18	3	48	10	28	14	10	306	15	44	198	23
PCE Adj:	1.00	1.00	1.00	1.00	1.00	1.00	1.00	1.00	1.00	1.00	1.00	1.00
MLF Adj:	1.00	1.00	1.00	1.00	1.00	1.00	1.00	1.00	1.00	1.00	1.00	1.00
FinalVolume:	18	3	48	10	28	14	10	306	15	44	198	23
Saturation Flow Module:												
Adjustment:	1.00	1.00	1.00	1.00	1.00	1.00	1.00	1.00	1.00	1.00	1.00	1.00
Lanes:	0.26	0.05	0.69	0.19	0.54	0.27	1.00	1.91	0.09	1.00	1.79	0.21
Final Sat.:	178	31	471	121	350	175	637	1343	66	629	1250	150
Capacity Analysis Module:												
Vol/Sat:	0.10	0.10	0.10	0.08	0.08	0.08	0.02	0.23	0.23	0.07	0.16	0.16
Crit Moves:	****			****				****			****	
Delay/Veh:	8.4	8.4	8.4	8.6	8.6	8.6	8.3	9.2	9.1	8.7	8.7	8.5
Delay Adj:	1.00	1.00	1.00	1.00	1.00	1.00	1.00	1.00	1.00	1.00	1.00	1.00
AdjDel/Veh:	8.4	8.4	8.4	8.6	8.6	8.6	8.3	9.2	9.1	8.7	8.7	8.5
LOS by Move:	A	A	A	A	A	A	A	A	A	A	A	A
ApproachDel:	8.4			8.6			9.1			8.7		
Delay Adj:	1.00			1.00			1.00			1.00		
ApprAdjDel:	8.4			8.6			9.1			8.7		
LOS by Appr:	A			A			A			A		
AllWayAvgQ:	0.1	0.1	0.1	0.1	0.1	0.1	0.0	0.3	0.3	0.1	0.2	0.2

Note: Queue reported is the number of cars per lane.

Movement	EBL	EBT	EBR	WBL	WBT	WBR	NBL	NBT	NBR	SBL	SBT	SBR
Lane Configurations												
Ideal Flow (vphpl)	1800	1800	1800	1800	1800	1800	1800	1800	1800	1800	1800	1800
Total Lost time (s)		4.0			4.0			4.0	4.0		4.0	4.0
Lane Util. Factor		*1.00			*1.00			1.00	1.00		1.00	1.00
Frt		1.00			1.00			1.00	1.00		1.00	1.00
Flt Protected		1.00			1.00			1.00	1.00		1.00	1.00
Satd. Flow (prot)		3600			3599			1800	1800		1800	1800
Flt Permitted		1.00			1.00			1.00	1.00		1.00	1.00
Satd. Flow (perm)		3600			3599			1800	1800		1800	1800
Volume (vph)	15	444	41	122	193	1	38	27	126	3	36	26
Peak-hour factor, PHF	0.86	0.86	0.86	0.86	0.86	0.86	0.86	0.86	0.86	0.86	0.86	0.86
Adj. Flow (vph)	17	516	48	142	224	1	44	31	147	3	42	30
RTOR Reduction (vph)	0	9	0	0	0	0	0	0	110	0	0	24
Lane Group Flow (vph)	0	572	0	0	367	0	0	75	37	0	45	6
Turn Type	Perm			Perm			Split		Perm	Split		Perm
Protected Phases		4			8		2	2		6	6	
Permitted Phases	4			8					2			6
Actuated Green, G (s)		28.0			28.0			19.0	19.0		16.0	16.0
Effective Green, g (s)		28.0			28.0			19.0	19.0		16.0	16.0
Actuated g/C Ratio		0.37			0.37			0.25	0.25		0.21	0.21
Clearance Time (s)		4.0			4.0			4.0	4.0		4.0	4.0
Lane Grp Cap (vph)		1344			1344			456	456		384	384
v/s Ratio Prot								c0.04			c0.03	
v/s Ratio Perm		0.16			0.10				0.02			0.00
v/c Ratio		0.43			0.27			0.16	0.08		0.12	0.02
Uniform Delay, d1		17.5			16.4			21.8	21.3		23.8	23.3
Progression Factor		1.00			1.03			1.00	1.00		1.00	1.00
Incremental Delay, d2		1.0			0.5			0.8	0.4		0.6	0.1
Delay (s)		18.5			17.3			22.6	21.7		24.4	23.4
Level of Service		B			B			C	C		C	C
Approach Delay (s)		18.5			17.3			22.0			24.0	
Approach LOS		B			B			C			C	

Intersection Summary			
HCM Average Control Delay	19.1	HCM Level of Service	B
HCM Volume to Capacity ratio	0.27		
Actuated Cycle Length (s)	75.0	Sum of lost time (s)	12.0
Intersection Capacity Utilization	44.6%	ICU Level of Service	A
Analysis Period (min)	15		

c Critical Lane Group

Movement	EBT	EBR	WBL	WBT	NBL	NBR
Lane Configurations						
Sign Control	Free			Free	Stop	
Grade	0%			0%	0%	
Volume (veh/h)	159	10	5	118	4	5
Peak Hour Factor	0.87	0.87	0.87	0.87	0.87	0.87
Hourly flow rate (vph)	183	11	6	136	5	6
Pedestrians						
Lane Width (ft)						
Walking Speed (ft/s)						
Percent Blockage						
Right turn flare (veh)						
Median type					None	
Median storage veh)						
Upstream signal (ft)				682		
pX, platoon unblocked						
vC, conflicting volume			194		268	97
vC1, stage 1 conf vol						
vC2, stage 2 conf vol						
vCu, unblocked vol			194		268	97
tC, single (s)			4.1		6.8	6.9
tC, 2 stage (s)						
tF (s)			2.2		3.5	3.3
p0 queue free %			100		99	99
cM capacity (veh/h)			1391		702	947

Direction, Lane #	EB 1	EB 2	WB 1	WB 2	NB 1
Volume Total	122	72	51	90	10
Volume Left	0	0	6	0	5
Volume Right	0	11	0	0	6
cSH	1700	1700	1391	1700	819
Volume to Capacity	0.07	0.04	0.00	0.05	0.01
Queue Length 95th (ft)	0	0	0	0	1
Control Delay (s)	0.0	0.0	0.9	0.0	9.4
Lane LOS			A		A
Approach Delay (s)	0.0		0.3		9.4
Approach LOS					A

Intersection Summary			
Average Delay	0.4		
Intersection Capacity Utilization	17.3%	ICU Level of Service	A
Analysis Period (min)	15		

Year 2014 No Build AM Peak Hour
City of San Bernardino
Redlands First Mile

Level Of Service Computation Report
2000 HCM Unsignalized Method (Base Volume Alternative)

Intersection #5 J St and 2nd St

Average Delay (sec/veh): 1.4 Worst Case Level Of Service: C[16.3]

Street Name:	J St						2nd St					
Approach:	North Bound			South Bound			East Bound			West Bound		
Movement:	L	T	R	L	T	R	L	T	R	L	T	R
Control:	Stop Sign			Stop Sign			Uncontrolled			Uncontrolled		
Rights:	Include			Include			Include			Include		
Lanes:	0 0 1!	0	0	0 1	0	0 0	1 0	1	1 0	1 0	1	1 0
Volume Module:												
Base Vol:	5	4	65	9	6	0	4	432	13	10	305	12
Growth Adj:	1.00	1.00	1.00	1.00	1.00	1.00	1.00	1.00	1.00	1.00	1.00	1.00
Initial Bse:	5	4	65	9	6	0	4	432	13	10	305	12
User Adj:	1.00	1.00	1.00	1.00	1.00	1.00	1.00	1.00	1.00	1.00	1.00	1.00
PHF Adj:	0.95	0.95	0.95	0.95	0.95	0.95	0.95	0.95	0.95	0.95	0.95	0.95
PHF Volume:	5	4	68	9	6	0	4	455	14	11	321	13
Reduct Vol:	0	0	0	0	0	0	0	0	0	0	0	0
FinalVolume:	5	4	68	9	6	0	4	455	14	11	321	13
Critical Gap Module:												
Critical Gp:	7.5	6.5	6.9	7.5	6.5	xxxxx	4.1	xxxx	xxxxx	4.1	xxxx	xxxxx
FollowUpTim:	3.5	4.0	3.3	3.5	4.0	xxxxx	2.2	xxxx	xxxxx	2.2	xxxx	xxxxx
Capacity Module:												
Cnflict Vol:	655	825	234	586	825	xxxxx	334	xxxx	xxxxx	468	xxxx	xxxxx
Potent Cap.:	355	310	774	398	310	xxxxx	1237	xxxx	xxxxx	1104	xxxx	xxxxx
Move Cap.:	346	306	774	355	306	xxxxx	1237	xxxx	xxxxx	1104	xxxx	xxxxx
Volume/Cap:	0.02	0.01	0.09	0.03	0.02	xxxx	0.00	xxxx	xxxx	0.01	xxxx	xxxx
Level Of Service Module:												
2Way95thQ:	xxxx	xxxx	xxxxx	xxxx	xxxx	xxxxx	0.0	xxxx	xxxxx	0.0	xxxx	xxxxx
Control Del:	xxxxx	xxxx	xxxxx	xxxxx	xxxx	xxxxx	7.9	xxxx	xxxxx	8.3	xxxx	xxxxx
LOS by Move:	*	*	*	*	*	*	A	*	*	A	*	*
Movement:	LT -	LTR -	RT	LT -	LTR -	RT	LT -	LTR -	RT	LT -	LTR -	RT
Shared Cap.:	xxxx	664	xxxxx	334	xxxx	xxxxx	xxxx	xxxx	xxxxx	xxxx	xxxx	xxxxx
SharedQueue:	xxxxx	0.4	xxxxx	0.1	xxxx	xxxxx	xxxxx	xxxx	xxxxx	xxxxx	xxxx	xxxxx
Shrd ConDel:	xxxxx	11.1	xxxxx	16.3	xxxx	xxxxx	xxxxx	xxxx	xxxxx	xxxxx	xxxx	xxxxx
Shared LOS:	*	B	*	C	*	*	*	*	*	*	*	*
ApproachDel:	11.1			16.3			xxxxxx			xxxxxx		
ApproachLOS:	B			C			*			*		

Note: Queue reported is the number of cars per lane.

Movement	EBL	EBT	EBR	WBL	WBT	WBR	NBL	NBT	NBR	SBL	SBT	SBR
Lane Configurations												
Sign Control		Free			Free			Stop			Stop	
Grade		0%			0%			0%			0%	
Volume (veh/h)	47	532	2	34	270	19	5	7	3	6	2	4
Peak Hour Factor	0.88	0.88	0.88	0.88	0.88	0.88	0.88	0.88	0.88	0.88	0.88	0.88
Hourly flow rate (vph)	53	605	2	39	307	22	6	8	3	7	2	5
Pedestrians												
Lane Width (ft)												
Walking Speed (ft/s)												
Percent Blockage												
Right turn flare (veh)												
Median type								None			None	
Median storage veh)												
Upstream signal (ft)		704			682							
pX, platoon unblocked				0.92			0.92	0.92	0.92	0.92	0.92	
vC, conflicting volume	328			607			949	1118	303	811	1109	164
vC1, stage 1 conf vol												
vC2, stage 2 conf vol												
vCu, unblocked vol	328			490			861	1044	161	711	1034	164
tC, single (s)	4.1			4.1			7.5	6.5	6.9	7.5	6.5	6.9
tC, 2 stage (s)												
tF (s)	2.2			2.2			3.5	4.0	3.3	3.5	4.0	3.3
p0 queue free %	96			96			97	96	100	97	99	99
cM capacity (veh/h)	1242			1000			216	196	795	271	199	858

Direction, Lane #	EB 1	EB 2	WB 1	WB 2	NB 1	SB 1
Volume Total	356	305	192	175	17	14
Volume Left	53	0	39	0	6	7
Volume Right	0	2	0	22	3	5
cSH	1242	1700	1000	1700	239	325
Volume to Capacity	0.04	0.18	0.04	0.10	0.07	0.04
Queue Length 95th (ft)	3	0	3	0	6	3
Control Delay (s)	1.6	0.0	2.1	0.0	21.2	16.6
Lane LOS	A		A		C	C
Approach Delay (s)	0.8		1.1		21.2	16.6
Approach LOS					C	C

Intersection Summary			
Average Delay	1.5		
Intersection Capacity Utilization	39.9%	ICU Level of Service	A
Analysis Period (min)	15		

Movement	EBT	EBR	WBL	WBT	NBL	NBR
Lane Configurations						
Ideal Flow (vphpl)	1800	1800	1800	1800	1700	1800
Total Lost time (s)	4.0			4.0		
Lane Util. Factor	*1.00			*1.00		
Frt	1.00			1.00		
Flt Protected	1.00			1.00		
Satd. Flow (prot)	3600			3600		
Flt Permitted	1.00			1.00		
Satd. Flow (perm)	3600			3600		
Volume (vph)	147	0	0	103	0	0
Peak-hour factor, PHF	0.96	0.96	0.96	0.96	0.96	0.96
Adj. Flow (vph)	153	0	0	107	0	0
RTOR Reduction (vph)	0	0	0	0	0	0
Lane Group Flow (vph)	153	0	0	107	0	0
Turn Type			Perm			Perm
Protected Phases	4			8	2	
Permitted Phases			8			2
Actuated Green, G (s)	34.0			34.0		
Effective Green, g (s)	34.0			34.0		
Actuated g/C Ratio	0.45			0.45		
Clearance Time (s)	4.0			4.0		
Lane Grp Cap (vph)	1632			1632		
v/s Ratio Prot	c0.04			0.03		
v/s Ratio Perm						
v/c Ratio	0.09			0.07		
Uniform Delay, d1	11.7			11.5		
Progression Factor	1.00			1.00		
Incremental Delay, d2	0.1			0.1		
Delay (s)	11.8			11.6		
Level of Service	B			B		
Approach Delay (s)	11.8			11.6	0.0	
Approach LOS	B			B	A	

Intersection Summary			
HCM Average Control Delay	11.7	HCM Level of Service	B
HCM Volume to Capacity ratio	0.09		
Actuated Cycle Length (s)	75.0	Sum of lost time (s)	41.0
Intersection Capacity Utilization	7.6%	ICU Level of Service	A
Analysis Period (min)	15		

c Critical Lane Group

Movement	EBL	EBT	EBR	WBL	WBT	WBR	NBL	NBT	NBR	SBL	SBT	SBR
Lane Configurations												
Ideal Flow (vphpl)	1700	1800	1800	1700	1800	1800	1800	1800	1800	1800	1800	1800
Total Lost time (s)	4.0	4.0		4.0	4.0			4.0	4.0		4.0	
Lane Util. Factor	1.00	*1.00		1.00	*1.00			*1.00	1.00		*1.00	
Frt	1.00	1.00		1.00	1.00			1.00	1.00		1.00	
Flt Protected	1.00	1.00		1.00	1.00			1.00	1.00		1.00	
Satd. Flow (prot)	1700	3600		1700	3600			3600	1800		3600	
Flt Permitted	1.00	1.00		1.00	1.00			1.00	1.00		1.00	
Satd. Flow (perm)	1700	3600		1700	3600			3600	1800		3600	
Volume (vph)	25	455	10	320	360	6	5	24	114	16	5	12
Peak-hour factor, PHF	0.94	0.94	0.94	0.94	0.94	0.94	0.94	0.94	0.94	0.94	0.94	0.94
Adj. Flow (vph)	27	484	11	340	383	6	5	26	121	17	5	13
RTOR Reduction (vph)	0	2	0	0	1	0	0	0	81	0	9	0
Lane Group Flow (vph)	27	493	0	340	388	0	0	31	40	0	26	0
Turn Type	Perm			Perm			Perm		Perm	Perm		
Protected Phases		4			8			2			6	
Permitted Phases	4			8			2		2	6		
Actuated Green, G (s)	42.0	42.0		42.0	42.0			25.0	25.0		25.0	
Effective Green, g (s)	42.0	42.0		42.0	42.0			25.0	25.0		25.0	
Actuated g/C Ratio	0.56	0.56		0.56	0.56			0.33	0.33		0.33	
Clearance Time (s)	4.0	4.0		4.0	4.0			4.0	4.0		4.0	
Lane Grp Cap (vph)	952	2016		952	2016			1200	600		1200	
v/s Ratio Prot		0.14			0.11							
v/s Ratio Perm	0.02			c0.20				0.01	c0.02		0.01	
v/c Ratio	0.03	0.24		0.36	0.19			0.03	0.07		0.02	
Uniform Delay, d1	7.4	8.4		9.1	8.1			16.8	17.0		16.8	
Progression Factor	1.00	1.00		0.94	0.91			0.89	1.78		1.00	
Incremental Delay, d2	0.1	0.3		1.0	0.2			0.0	0.2		0.0	
Delay (s)	7.4	8.7		9.5	7.6			15.0	30.6		16.8	
Level of Service	A	A		A	A			B	C		B	
Approach Delay (s)		8.6			8.5			27.4			16.8	
Approach LOS		A			A			C			B	

Intersection Summary			
HCM Average Control Delay	10.8	HCM Level of Service	B
HCM Volume to Capacity ratio	0.25		
Actuated Cycle Length (s)	75.0	Sum of lost time (s)	8.0
Intersection Capacity Utilization	51.0%	ICU Level of Service	A
Analysis Period (min)	15		

c Critical Lane Group

Movement	EBL	EBT	EBR	WBL	WBT	WBR	NBL	NBT	NBR	SBL	SBT	SBR
Lane Configurations												
Ideal Flow (vphpl)	1800	1800	1800	1800	1800	1800	1800	1800	1800	1800	1800	1800
Total Lost time (s)		4.0			4.0			4.0			4.0	
Lane Util. Factor		*1.00			*1.00			*1.00			*1.00	
Frt		1.00			1.00			1.00			1.00	
Flt Protected		1.00			1.00			1.00			1.00	
Satd. Flow (prot)		3600			3600			3600			3600	
Flt Permitted		1.00			1.00			1.00			1.00	
Satd. Flow (perm)		3600			3600			3600			3600	
Volume (vph)	91	450	21	40	228	17	9	66	66	125	127	108
Peak-hour factor, PHF	0.89	0.89	0.89	0.89	0.89	0.89	0.89	0.89	0.89	0.89	0.89	0.89
Adj. Flow (vph)	102	506	24	45	256	19	10	74	74	140	143	121
RTOR Reduction (vph)	0	4	0	0	7	0	0	44	0	0	72	0
Lane Group Flow (vph)	0	628	0	0	313	0	0	114	0	0	332	0
Turn Type	Perm			Perm			Perm			Perm		
Protected Phases		4			8			2			6	
Permitted Phases	4			8			2			6		
Actuated Green, G (s)		37.0			37.0			30.0			30.0	
Effective Green, g (s)		37.0			37.0			30.0			30.0	
Actuated g/C Ratio		0.49			0.49			0.40			0.40	
Clearance Time (s)		4.0			4.0			4.0			4.0	
Lane Grp Cap (vph)		1776			1776			1440			1440	
v/s Ratio Prot												
v/s Ratio Perm		0.17			0.09			0.03			0.09	
v/c Ratio		0.35			0.18			0.08			0.23	
Uniform Delay, d1		11.7			10.5			13.9			14.9	
Progression Factor		2.44			0.67			1.00			1.60	
Incremental Delay, d2		0.5			0.2			0.1			0.4	
Delay (s)		29.0			7.3			14.0			24.1	
Level of Service		C			A			B			C	
Approach Delay (s)		29.0			7.3			14.0			24.1	
Approach LOS		C			A			B			C	

Intersection Summary			
HCM Average Control Delay	21.5	HCM Level of Service	C
HCM Volume to Capacity ratio	0.30		
Actuated Cycle Length (s)	75.0	Sum of lost time (s)	8.0
Intersection Capacity Utilization	54.0%	ICU Level of Service	A
Analysis Period (min)	15		

c Critical Lane Group

Movement	EBL	EBT	EBR	WBL	WBT	WBR	NBL	NBT	NBR	SBL	SBT	SBR
Lane Configurations												
Ideal Flow (vphpl)	1800	1800	1800	1700	1800	1800	1800	1800	1800	1800	1800	1700
Total Lost time (s)		4.0		4.0	4.0						4.0	4.0
Lane Util. Factor		*1.00		1.00	*1.00						*1.00	*1.00
Frt		1.00		1.00	1.00						1.00	1.00
Flt Protected		1.00		1.00	1.00						1.00	1.00
Satd. Flow (prot)		3600		1700	3600						3600	3400
Flt Permitted		1.00		1.00	1.00						1.00	1.00
Satd. Flow (perm)		3600		1700	3600						3600	3400
Volume (vph)	0	160	4	152	89	0	0	0	0	245	404	2
Peak-hour factor, PHF	0.96	0.96	0.96	0.96	0.96	0.96	0.96	0.96	0.96	0.96	0.96	0.96
Adj. Flow (vph)	0	167	4	158	93	0	0	0	0	255	421	2
RTOR Reduction (vph)	0	2	0	0	0	0	0	0	0	0	0	1
Lane Group Flow (vph)	0	169	0	158	93	0	0	0	0	0	676	1
Turn Type				Prot						Split		Perm
Protected Phases		4		3	8					6	6	
Permitted Phases												6
Actuated Green, G (s)		18.0		26.0	48.0						34.0	34.0
Effective Green, g (s)		18.0		26.0	48.0						34.0	34.0
Actuated g/C Ratio		0.20		0.29	0.53						0.38	0.38
Clearance Time (s)		4.0		4.0	4.0						4.0	4.0
Lane Grp Cap (vph)		720		491	1920						1360	1284
v/s Ratio Prot		c0.05		c0.09	0.03						c0.19	
v/s Ratio Perm												0.00
v/c Ratio		0.24		0.32	0.05						0.50	0.00
Uniform Delay, d1		30.2		25.1	10.1						21.5	17.4
Progression Factor		1.00		2.37	0.31						1.00	1.00
Incremental Delay, d2		0.8		1.7	0.0						1.3	0.0
Delay (s)		31.0		61.2	3.1						22.8	17.4
Level of Service		C		E	A						C	B
Approach Delay (s)		31.0			39.7			0.0			22.7	
Approach LOS		C			D			A			C	

Intersection Summary			
HCM Average Control Delay	27.9	HCM Level of Service	C
HCM Volume to Capacity ratio	0.38		
Actuated Cycle Length (s)	90.0	Sum of lost time (s)	12.0
Intersection Capacity Utilization	41.9%	ICU Level of Service	A
Analysis Period (min)	15		

c Critical Lane Group

Movement	EBL	EBT	EBR	WBL	WBT	WBR	NBL	NBT	NBR	SBL	SBT	SBR
Lane Configurations												
Ideal Flow (vphpl)	1800	1800	1800	1600	1800	1800	1800	1800	1800	1700	1800	1800
Total Lost time (s)		4.0	4.0	4.0	4.0					4.0	4.0	4.0
Lane Util. Factor		*1.00	1.00	*1.00	*1.00					*1.00	*1.00	*1.00
Frt		1.00	1.00	1.00	1.00					1.00	0.86	1.00
Flt Protected		1.00	1.00	1.00	1.00					1.00	1.00	1.00
Satd. Flow (prot)		5400	1800	3200	3600					1700	1542	1800
Flt Permitted		1.00	1.00	1.00	1.00					1.00	1.00	1.00
Satd. Flow (perm)		5400	1800	3200	3600					1700	1542	1800
Volume (vph)	0	452	141	221	229	0	0	0	0	98	10	451
Peak-hour factor, PHF	0.95	0.95	0.95	0.95	0.95	0.95	0.95	0.95	0.95	0.95	0.95	0.95
Adj. Flow (vph)	0	476	148	233	241	0	0	0	0	103	11	475
RTOR Reduction (vph)	0	0	109	0	0	0	0	0	0	0	157	166
Lane Group Flow (vph)	0	476	39	233	241	0	0	0	0	103	85	78
Turn Type			Perm	Prot						Split		Perm
Protected Phases		4		3	8					6	6	
Permitted Phases			4									6
Actuated Green, G (s)		20.0	20.0	19.0	43.0					24.0	24.0	24.0
Effective Green, g (s)		20.0	20.0	19.0	43.0					24.0	24.0	24.0
Actuated g/C Ratio		0.27	0.27	0.25	0.57					0.32	0.32	0.32
Clearance Time (s)		4.0	4.0	4.0	4.0					4.0	4.0	4.0
Lane Grp Cap (vph)		1440	480	811	2064					544	493	576
v/s Ratio Prot		c0.09		c0.07	0.07					c0.06	0.06	
v/s Ratio Perm			0.02									0.04
v/c Ratio		0.33	0.08	0.29	0.12					0.19	0.17	0.14
Uniform Delay, d1		22.1	20.6	22.5	7.3					18.5	18.4	18.1
Progression Factor		0.78	1.17	1.00	1.00					1.00	1.00	1.00
Incremental Delay, d2		0.6	0.3	0.9	0.1					0.8	0.8	0.5
Delay (s)		17.9	24.5	23.4	7.4					19.2	19.1	18.6
Level of Service		B	C	C	A					B	B	B
Approach Delay (s)		19.4			15.3			0.0			18.9	
Approach LOS		B			B			A			B	

Intersection Summary			
HCM Average Control Delay	18.1	HCM Level of Service	B
HCM Volume to Capacity ratio	0.26		
Actuated Cycle Length (s)	75.0	Sum of lost time (s)	12.0
Intersection Capacity Utilization	68.6%	ICU Level of Service	C
Analysis Period (min)	15		

c Critical Lane Group

Movement	EBL	EBT	EBR	WBL	WBT	WBR	NBL	NBT	NBR	SBL	SBT	SBR
Lane Configurations												
Ideal Flow (vphpl)	1700	1800	1800	1800	1800	1800	1800	1800	1800	1800	1800	1800
Total Lost time (s)	4.0	4.0			4.0	4.0		4.0				
Lane Util. Factor	1.00	*1.00			*1.00	1.00		*1.00				
Frt	1.00	1.00			1.00	1.00		1.00				
Flt Protected	1.00	1.00			1.00	1.00		1.00				
Satd. Flow (prot)	1700	3600			5400	1800		3599				
Flt Permitted	1.00	1.00			1.00	1.00		1.00				
Satd. Flow (perm)	1700	3600			5400	1800		3599				
Volume (vph)	105	310	0	0	247	120	1	236	15	0	0	0
Peak-hour factor, PHF	0.96	0.96	0.96	0.96	0.96	0.96	0.96	0.96	0.96	0.96	0.96	0.96
Adj. Flow (vph)	109	323	0	0	257	125	1	246	16	0	0	0
RTOR Reduction (vph)	0	0	0	0	0	89	0	6	0	0	0	0
Lane Group Flow (vph)	109	323	0	0	257	36	0	257	0	0	0	0
Turn Type	Prot					Perm	Split					
Protected Phases	7	4			8		2	2				
Permitted Phases						8						
Actuated Green, G (s)	27.0	57.0			26.0	26.0		25.0				
Effective Green, g (s)	27.0	57.0			26.0	26.0		25.0				
Actuated g/C Ratio	0.30	0.63			0.29	0.29		0.28				
Clearance Time (s)	4.0	4.0			4.0	4.0		4.0				
Lane Grp Cap (vph)	510	2280			1560	520		1000				
v/s Ratio Prot	c0.06	0.09			c0.05			c0.07				
v/s Ratio Perm						0.02						
v/c Ratio	0.21	0.14			0.16	0.07		0.26				
Uniform Delay, d1	23.6	6.6			23.9	23.2		25.3				
Progression Factor	1.03	1.33			1.00	1.00		0.87				
Incremental Delay, d2	0.9	0.1			0.2	0.3		0.6				
Delay (s)	25.3	9.0			24.1	23.5		22.5				
Level of Service	C	A			C	C		C				
Approach Delay (s)		13.1			23.9			22.5			0.0	
Approach LOS		B			C			C			A	

Intersection Summary			
HCM Average Control Delay	19.2	HCM Level of Service	B
HCM Volume to Capacity ratio	0.21		
Actuated Cycle Length (s)	90.0	Sum of lost time (s)	12.0
Intersection Capacity Utilization	41.9%	ICU Level of Service	A
Analysis Period (min)	15		

c Critical Lane Group

Movement	EBL	EBT	EBR	WBL	WBT	WBR	NBL	NBT	NBR	SBL	SBT	SBR
Lane Configurations												
Ideal Flow (vphpl)	1600	1800	1800	1800	1800	1800	1700	1800	1800	1800	1800	1800
Total Lost time (s)	4.0	4.0			4.0	4.0	4.0	4.0	4.0			
Lane Util. Factor	*1.00	*1.00			*1.00	1.00	*1.00	*1.00	*1.00			
Frt	1.00	1.00			1.00	1.00	1.00	1.00	1.00			
Flt Protected	0.95	1.00			1.00	1.00	1.00	1.00	1.00			
Satd. Flow (prot)	3040	3600			7200	1800	1700	1800	1800			
Flt Permitted	1.00	1.00			1.00	1.00	1.00	1.00	1.00			
Satd. Flow (perm)	3200	3600			7200	1800	1700	1800	1800			
Volume (vph)	132	423	0	0	276	118	171	17	1137	0	0	0
Peak-hour factor, PHF	0.92	0.92	0.92	0.92	0.92	0.92	0.92	0.92	0.92	0.92	0.92	0.92
Adj. Flow (vph)	143	460	0	0	300	128	186	18	1236	0	0	0
RTOR Reduction (vph)	0	0	0	0	0	0	0	104	104	0	0	0
Lane Group Flow (vph)	143	460	0	0	300	128	186	523	523	0	0	0
Turn Type	Prot					Free	Split		Prot			
Protected Phases	7	4			8		2	2	2			
Permitted Phases						Free						
Actuated Green, G (s)	16.0	34.0			14.0	90.0	48.0	48.0	48.0			
Effective Green, g (s)	16.0	34.0			14.0	90.0	48.0	48.0	48.0			
Actuated g/C Ratio	0.18	0.38			0.16	1.00	0.53	0.53	0.53			
Clearance Time (s)	4.0	4.0			4.0		4.0	4.0	4.0			
Lane Grp Cap (vph)	540	1360			1120	1800	907	960	960			
v/s Ratio Prot	0.05	c0.13			0.04		0.11	c0.29	0.29			
v/s Ratio Perm						0.07						
v/c Ratio	0.26	0.34			0.27	0.07	0.21	0.55	0.55			
Uniform Delay, d1	31.9	20.0			33.5	0.0	11.0	13.8	13.8			
Progression Factor	1.00	1.00			0.76	1.00	1.00	1.00	1.00			
Incremental Delay, d2	1.2	0.7			0.6	0.1	0.5	2.2	2.2			
Delay (s)	33.1	20.6			26.1	0.1	11.5	16.0	16.0			
Level of Service	C	C			C	A	B	B	B			
Approach Delay (s)		23.6			18.3			15.5			0.0	
Approach LOS		C			B			B			A	

Intersection Summary			
HCM Average Control Delay	17.9	HCM Level of Service	B
HCM Volume to Capacity ratio	0.46		
Actuated Cycle Length (s)	90.0	Sum of lost time (s)	8.0
Intersection Capacity Utilization	68.6%	ICU Level of Service	C
Analysis Period (min)	15		

c Critical Lane Group

Movement	EBL	EBT	EBR	WBL	WBT	WBR	NBL	NBT	NBR	SBL	SBT	SBR
Lane Configurations												
Ideal Flow (vphpl)	1700	1800	1800	1700	1800	1800	1700	1800	1800	1700	1800	1800
Total Lost time (s)	4.0	4.0		4.0	4.0			4.0		4.0	4.0	
Lane Util. Factor	1.00	*1.00		1.00	*1.00			*1.00		1.00	*1.00	
Frt	1.00	1.00		1.00	1.00			1.00		1.00	1.00	
Flt Protected	1.00	1.00		1.00	1.00			1.00		1.00	1.00	
Satd. Flow (prot)	1700	3600		1700	3600			3600		1700	3600	
Flt Permitted	1.00	1.00		1.00	1.00			1.00		1.00	1.00	
Satd. Flow (perm)	1700	3600		1700	3600			3600		1700	3600	
Volume (vph)	33	192	91	37	208	7	0	78	98	14	173	120
Peak-hour factor, PHF	0.81	0.81	0.81	0.81	0.81	0.81	0.81	0.81	0.81	0.81	0.81	0.81
Adj. Flow (vph)	41	237	112	46	257	9	0	96	121	17	214	148
RTOR Reduction (vph)	0	79	0	0	4	0	0	84	0	0	103	0
Lane Group Flow (vph)	41	270	0	46	262	0	0	133	0	17	259	0
Turn Type	Prot			Prot			Perm			Perm		
Protected Phases	5	2		1	6			8			4	
Permitted Phases							8			4		
Actuated Green, G (s)	18.0	22.0		18.0	22.0			23.0		23.0	23.0	
Effective Green, g (s)	18.0	22.0		18.0	22.0			23.0		23.0	23.0	
Actuated g/C Ratio	0.24	0.29		0.24	0.29			0.31		0.31	0.31	
Clearance Time (s)	4.0	4.0		4.0	4.0			4.0		4.0	4.0	
Lane Grp Cap (vph)	408	1056		408	1056			1104		521	1104	
v/s Ratio Prot	0.02	c0.07		c0.03	0.07			0.04			c0.07	
v/s Ratio Perm										0.01		
v/c Ratio	0.10	0.26		0.11	0.25			0.12		0.03	0.23	
Uniform Delay, d1	22.2	20.2		22.3	20.2			18.7		18.2	19.4	
Progression Factor	1.00	1.00		1.00	1.00			1.00		1.00	1.00	
Incremental Delay, d2	0.5	0.6		0.6	0.6			0.2		0.1	0.5	
Delay (s)	22.7	20.8		22.8	20.8			18.9		18.3	19.9	
Level of Service	C	C		C	C			B		B	B	
Approach Delay (s)		21.0			21.1			18.9			19.9	
Approach LOS		C			C			B			B	

Intersection Summary			
HCM Average Control Delay	20.3	HCM Level of Service	C
HCM Volume to Capacity ratio	0.21		
Actuated Cycle Length (s)	75.0	Sum of lost time (s)	12.0
Intersection Capacity Utilization	35.0%	ICU Level of Service	A
Analysis Period (min)	15		

c Critical Lane Group

Movement	EBL	EBT	EBR	WBL	WBT	WBR	NBL	NBT	NBR	SBL	SBT	SBR
Lane Configurations												
Ideal Flow (vphpl)	1700	1800	1800	1700	1800	1800	1700	1800	1800	1700	1800	1800
Total Lost time (s)	4.0	4.0		4.0	4.0		4.0	4.0		4.0	4.0	
Lane Util. Factor	1.00	*1.00		1.00	*1.00		1.00	*1.00		1.00	*1.00	
Frt	1.00	1.00		1.00	1.00		1.00	1.00		1.00	1.00	
Flt Protected	1.00	1.00		1.00	1.00		1.00	1.00		1.00	1.00	
Satd. Flow (prot)	1700	5400		1700	5400		1700	3600		1700	3600	
Flt Permitted	1.00	1.00		1.00	1.00		1.00	1.00		1.00	1.00	
Satd. Flow (perm)	1700	5400		1700	5400		1700	3600		1700	3600	
Volume (vph)	116	1212	124	38	275	41	105	102	41	101	159	25
Peak-hour factor, PHF	0.94	0.94	0.94	0.94	0.94	0.94	0.94	0.94	0.94	0.94	0.94	0.94
Adj. Flow (vph)	123	1289	132	40	293	44	112	109	44	107	169	27
RTOR Reduction (vph)	0	16	0	0	26	0	0	37	0	0	15	0
Lane Group Flow (vph)	123	1405	0	40	311	0	112	116	0	107	181	0
Turn Type	Prot			Prot			pm+pt			pm+pt		
Protected Phases	7	4		3	8		5	2		1	6	
Permitted Phases							2			6		
Actuated Green, G (s)	19.0	36.0		12.0	29.0		26.0	14.0		26.0	14.0	
Effective Green, g (s)	19.0	36.0		12.0	29.0		26.0	14.0		26.0	14.0	
Actuated g/C Ratio	0.21	0.40		0.13	0.32		0.29	0.16		0.29	0.16	
Clearance Time (s)	4.0	4.0		4.0	4.0		4.0	4.0		4.0	4.0	
Lane Grp Cap (vph)	359	2160		227	1740		567	560		567	560	
v/s Ratio Prot	c0.07	c0.26		0.02	0.06		c0.03	0.03		0.03	c0.05	
v/s Ratio Perm							0.04			0.04		
v/c Ratio	0.34	0.65		0.18	0.18		0.20	0.21		0.19	0.32	
Uniform Delay, d1	30.2	21.9		34.6	21.9		24.4	33.2		24.3	33.8	
Progression Factor	0.95	0.92		1.00	1.00		1.00	1.00		1.00	1.00	
Incremental Delay, d2	2.2	1.3		1.7	0.2		0.8	0.8		0.7	1.5	
Delay (s)	30.9	21.6		36.3	22.2		25.1	34.0		25.0	35.3	
Level of Service	C	C		D	C		C	C		C	D	
Approach Delay (s)		22.3			23.7			30.3			31.7	
Approach LOS		C			C			C			C	

Intersection Summary			
HCM Average Control Delay	24.5	HCM Level of Service	C
HCM Volume to Capacity ratio	0.48		
Actuated Cycle Length (s)	90.0	Sum of lost time (s)	16.0
Intersection Capacity Utilization	56.3%	ICU Level of Service	B
Analysis Period (min)	15		

c Critical Lane Group

Movement	EBL	EBT	EBR	WBL	WBT	WBR	NBL	NBT	NBR	SBL	SBT	SBR
Lane Configurations												
Ideal Flow (vphpl)	1700	1800	1800	1700	1800	1800	1700	1800	1800	1700	1800	1800
Total Lost time (s)	4.0	4.0		4.0	4.0		4.0	4.0		4.0	4.0	
Lane Util. Factor	1.00	*1.00		1.00	*1.00		1.00	*1.00		1.00	*1.00	
Frt	1.00	1.00		1.00	1.00		1.00	1.00		1.00	1.00	
Flt Protected	1.00	1.00		1.00	1.00		1.00	1.00		1.00	1.00	
Satd. Flow (prot)	1700	3600		1700	3600		1700	3600		1700	3600	
Flt Permitted	1.00	1.00		1.00	1.00		1.00	1.00		1.00	1.00	
Satd. Flow (perm)	1700	3600		1700	3600		1700	3600		1700	3600	
Volume (vph)	48	491	30	40	251	66	14	53	27	104	93	49
Peak-hour factor, PHF	0.79	0.79	0.79	0.79	0.79	0.79	0.79	0.79	0.79	0.79	0.79	0.79
Adj. Flow (vph)	61	622	38	51	318	84	18	67	34	132	118	62
RTOR Reduction (vph)	0	6	0	0	35	0	0	21	0	0	38	0
Lane Group Flow (vph)	61	654	0	51	367	0	18	80	0	132	142	0
Turn Type	Perm			Perm			Perm			Perm		
Protected Phases		4			8			2			6	
Permitted Phases	4			8			2			6		
Actuated Green, G (s)	38.0	38.0		38.0	38.0		29.0	29.0		29.0	29.0	
Effective Green, g (s)	38.0	38.0		38.0	38.0		29.0	29.0		29.0	29.0	
Actuated g/C Ratio	0.51	0.51		0.51	0.51		0.39	0.39		0.39	0.39	
Clearance Time (s)	4.0	4.0		4.0	4.0		4.0	4.0		4.0	4.0	
Lane Grp Cap (vph)	861	1824		861	1824		657	1392		657	1392	
v/s Ratio Prot		c0.18			0.10			0.02			0.04	
v/s Ratio Perm	0.04			0.03			0.01			c0.08		
v/c Ratio	0.07	0.36		0.06	0.20		0.03	0.06		0.20	0.10	
Uniform Delay, d1	9.5	11.2		9.4	10.2		14.3	14.4		15.3	14.7	
Progression Factor	1.44	1.30		0.80	0.84		1.00	1.00		1.00	1.00	
Incremental Delay, d2	0.2	0.5		0.1	0.2		0.1	0.1		0.7	0.1	
Delay (s)	13.8	15.0		7.7	8.8		14.3	14.5		16.0	14.8	
Level of Service	B	B		A	A		B	B		B	B	
Approach Delay (s)		14.9			8.6			14.5			15.3	
Approach LOS		B			A			B			B	

Intersection Summary			
HCM Average Control Delay	13.2	HCM Level of Service	B
HCM Volume to Capacity ratio	0.29		
Actuated Cycle Length (s)	75.0	Sum of lost time (s)	8.0
Intersection Capacity Utilization	41.8%	ICU Level of Service	A
Analysis Period (min)	15		

c Critical Lane Group

Movement	EBL	EBT	EBR	WBL	WBT	WBR	NBL	NBT	NBR	SBL	SBT	SBR
Lane Configurations												
Sign Control		Stop			Stop			Free			Free	
Grade		0%			0%			0%			0%	
Volume (veh/h)	5	0	3	0	0	0	0	106	0	0	215	3
Peak Hour Factor	0.88	0.88	0.88	0.88	0.88	0.88	0.88	0.88	0.88	0.88	0.88	0.88
Hourly flow rate (vph)	6	0	3	0	0	0	0	120	0	0	244	3
Pedestrians												
Lane Width (ft)												
Walking Speed (ft/s)												
Percent Blockage												
Right turn flare (veh)												
Median type		None			None							
Median storage veh)												
Upstream signal (ft)											931	
pX, platoon unblocked												
vC, conflicting volume	306	366	124	246	368	60	248			120		
vC1, stage 1 conf vol												
vC2, stage 2 conf vol												
vCu, unblocked vol	306	366	124	246	368	60	248			120		
tC, single (s)	7.5	6.5	6.9	7.5	6.5	6.9	4.1			4.1		
tC, 2 stage (s)												
tF (s)	3.5	4.0	3.3	3.5	4.0	3.3	2.2			2.2		
p0 queue free %	99	100	100	100	100	100	100			100		
cM capacity (veh/h)	628	565	910	690	564	999	1330			1480		

Direction, Lane #	EB 1	WB 1	NB 1	NB 2	SB 1	SB 2
Volume Total	9	0	60	60	122	126
Volume Left	6	0	0	0	0	0
Volume Right	3	0	0	0	0	3
cSH	711	1700	1330	1700	1480	1700
Volume to Capacity	0.01	0.00	0.00	0.04	0.00	0.07
Queue Length 95th (ft)	1	0	0	0	0	0
Control Delay (s)	10.1	0.0	0.0	0.0	0.0	0.0
Lane LOS	B	A				
Approach Delay (s)	10.1	0.0	0.0		0.0	
Approach LOS	B	A				

Intersection Summary			
Average Delay	0.2		
Intersection Capacity Utilization	16.4%	ICU Level of Service	A
Analysis Period (min)	15		

Movement	EBL	EBT	EBR	WBL	WBT	WBR	NBL	NBT	NBR	SBL	SBT	SBR
Lane Configurations												
Ideal Flow (vphpl)	1700	1800	1800	1700	1800	1800	1700	1800	1800	1700	1800	1800
Total Lost time (s)	4.0	4.0		4.0	4.0		4.0	4.0		4.0	4.0	4.0
Lane Util. Factor	1.00	*1.00		1.00	*1.00		1.00	1.00		1.00	*1.00	1.00
Frt	1.00	1.00		1.00	1.00		1.00	1.00		1.00	1.00	1.00
Flt Protected	1.00	1.00		1.00	1.00		1.00	1.00		1.00	1.00	1.00
Satd. Flow (prot)	1700	3600		1700	5400		1700	1800		1700	1800	1800
Flt Permitted	1.00	1.00		1.00	1.00		1.00	1.00		1.00	1.00	1.00
Satd. Flow (perm)	1700	3600		1700	5400		1700	1800		1700	1800	1800
Volume (vph)	215	890	55	39	381	17	43	151	63	39	334	83
Peak-hour factor, PHF	0.92	0.92	0.92	0.92	0.92	0.92	0.92	0.92	0.92	0.92	0.92	0.92
Adj. Flow (vph)	234	967	60	42	414	18	47	164	68	42	363	90
RTOR Reduction (vph)	0	7	0	0	7	0	0	20	0	0	0	65
Lane Group Flow (vph)	234	1020	0	42	425	0	47	212	0	42	363	25
Turn Type	Prot			Prot			pm+pt			pm+pt		Perm
Protected Phases	7	4		3	8		5	2		1	6	
Permitted Phases							2			6		6
Actuated Green, G (s)	15.0	26.0		6.0	17.0		27.0	21.0		27.0	21.0	21.0
Effective Green, g (s)	15.0	26.0		6.0	17.0		27.0	21.0		27.0	21.0	21.0
Actuated g/C Ratio	0.20	0.35		0.08	0.23		0.36	0.28		0.36	0.28	0.28
Clearance Time (s)	4.0	4.0		4.0	4.0		4.0	4.0		4.0	4.0	4.0
Lane Grp Cap (vph)	340	1248		136	1224		703	504		703	504	504
v/s Ratio Prot	c0.14	c0.28		0.02	0.08		c0.01	0.12		0.00	c0.20	
v/s Ratio Perm							0.02			0.02		0.01
v/c Ratio	0.69	0.82		0.31	0.35		0.07	0.42		0.06	0.72	0.05
Uniform Delay, d1	27.8	22.3		32.5	24.3		16.4	22.0		15.9	24.4	19.7
Progression Factor	1.00	1.00		1.00	1.00		0.84	0.64		0.40	0.67	0.82
Incremental Delay, d2	10.8	6.0		5.8	0.8		0.2	2.4		0.1	7.7	0.2
Delay (s)	38.7	28.4		38.3	25.1		14.0	16.5		6.5	24.0	16.4
Level of Service	D	C		D	C		B	B		A	C	B
Approach Delay (s)		30.3			26.3			16.1			21.1	
Approach LOS		C			C			B			C	

Intersection Summary			
HCM Average Control Delay	26.1	HCM Level of Service	C
HCM Volume to Capacity ratio	0.71		
Actuated Cycle Length (s)	75.0	Sum of lost time (s)	16.0
Intersection Capacity Utilization	66.4%	ICU Level of Service	C
Analysis Period (min)	15		

c Critical Lane Group

Movement	EBL	EBT	EBR	WBL	WBT	WBR	NBL	NBT	NBR	SBL	SBT	SBR
Lane Configurations												
Ideal Flow (vphpl)	1700	1800	1800	1700	1800	1800	1700	1800	1800	1700	1800	1800
Total Lost time (s)	4.0	4.0		4.0	4.0		4.0	4.0		4.0	4.0	
Lane Util. Factor	1.00	*1.00		1.00	*1.00		1.00	*1.00		1.00	*1.00	
Frt	1.00	1.00		1.00	1.00		1.00	1.00		1.00	1.00	
Flt Protected	1.00	1.00		1.00	1.00		1.00	1.00		1.00	1.00	
Satd. Flow (prot)	1700	3600		1700	3600		1700	1800		1700	1800	
Flt Permitted	1.00	1.00		1.00	1.00		1.00	1.00		1.00	1.00	
Satd. Flow (perm)	1700	3600		1700	3600		1700	1800		1700	1800	
Volume (vph)	28	430	73	24	234	23	35	200	53	37	216	23
Peak-hour factor, PHF	0.78	0.78	0.78	0.78	0.78	0.78	0.78	0.78	0.78	0.78	0.78	0.78
Adj. Flow (vph)	36	551	94	31	300	29	45	256	68	47	277	29
RTOR Reduction (vph)	0	20	0	0	10	0	0	13	0	0	5	0
Lane Group Flow (vph)	36	625	0	31	319	0	45	311	0	47	301	0
Turn Type	Perm			Perm			pm+pt			pm+pt		
Protected Phases		4			8		5	2		1	6	
Permitted Phases	4			8			2			6		
Actuated Green, G (s)	25.0	25.0		25.0	25.0		38.0	27.0		38.0	27.0	
Effective Green, g (s)	25.0	25.0		25.0	25.0		38.0	27.0		38.0	27.0	
Actuated g/C Ratio	0.33	0.33		0.33	0.33		0.51	0.36		0.51	0.36	
Clearance Time (s)	4.0	4.0		4.0	4.0		4.0	4.0		4.0	4.0	
Lane Grp Cap (vph)	567	1200		567	1200		952	648		952	648	
v/s Ratio Prot		c0.17			0.09		0.01	c0.17		c0.01	0.17	
v/s Ratio Perm	0.02			0.02			0.02			0.02		
v/c Ratio	0.06	0.52		0.05	0.27		0.05	0.48		0.05	0.46	
Uniform Delay, d1	17.0	20.2		17.0	18.3		9.6	18.6		9.7	18.4	
Progression Factor	1.07	1.18		0.66	0.69		1.00	1.00		2.64	2.08	
Incremental Delay, d2	0.2	1.6		0.2	0.5		0.1	2.5		0.1	1.7	
Delay (s)	18.4	25.3		11.4	13.1		9.7	21.1		25.6	40.0	
Level of Service	B	C		B	B		A	C		C	D	
Approach Delay (s)		24.9			12.9			19.7			38.1	
Approach LOS		C			B			B			D	

Intersection Summary			
HCM Average Control Delay	24.0	HCM Level of Service	C
HCM Volume to Capacity ratio	0.42		
Actuated Cycle Length (s)	75.0	Sum of lost time (s)	12.0
Intersection Capacity Utilization	49.5%	ICU Level of Service	A
Analysis Period (min)	15		

c Critical Lane Group

Movement	EBL	EBT	EBR	WBL	WBT	WBR	NBL	NBT	NBR	SBL	SBT	SBR
Lane Configurations												
Ideal Flow (vphpl)	1700	1800	1800	1700	1800	1800	1700	1800	1800	1700	1800	1800
Total Lost time (s)	4.0	4.0		4.0	4.0		4.0	4.0		4.0	4.0	
Lane Util. Factor	1.00	*1.00		1.00	*1.00		1.00	*1.00		1.00	*1.00	
Frt	1.00	1.00		1.00	1.00		1.00	1.00		1.00	1.00	
Flt Protected	1.00	1.00		1.00	1.00		1.00	1.00		1.00	1.00	
Satd. Flow (prot)	1700	3600		1700	3600		1700	3600		1700	3600	
Flt Permitted	1.00	1.00		1.00	1.00		1.00	1.00		1.00	1.00	
Satd. Flow (perm)	1700	3600		1700	3600		1700	3600		1700	3600	
Volume (vph)	67	277	59	35	229	15	29	230	25	18	239	34
Peak-hour factor, PHF	0.85	0.85	0.85	0.85	0.85	0.85	0.85	0.85	0.85	0.85	0.85	0.85
Adj. Flow (vph)	79	326	69	41	269	18	34	271	29	21	281	40
RTOR Reduction (vph)	0	26	0	0	7	0	0	12	0	0	16	0
Lane Group Flow (vph)	79	369	0	41	280	0	34	288	0	21	305	0
Turn Type	Perm			Perm			Perm			Perm		
Protected Phases		4			8			2			6	
Permitted Phases	4			8			2			6		
Actuated Green, G (s)	34.0	34.0		34.0	34.0		33.0	33.0		33.0	33.0	
Effective Green, g (s)	34.0	34.0		34.0	34.0		33.0	33.0		33.0	33.0	
Actuated g/C Ratio	0.45	0.45		0.45	0.45		0.44	0.44		0.44	0.44	
Clearance Time (s)	4.0	4.0		4.0	4.0		4.0	4.0		4.0	4.0	
Lane Grp Cap (vph)	771	1632		771	1632		748	1584		748	1584	
v/s Ratio Prot		c0.10			0.08			0.08			c0.08	
v/s Ratio Perm	0.05			0.02			0.02			0.01		
v/c Ratio	0.10	0.23		0.05	0.17		0.05	0.18		0.03	0.19	
Uniform Delay, d1	11.8	12.5		11.5	12.2		12.0	12.8		11.9	12.8	
Progression Factor	0.65	0.73		1.00	1.00		1.00	1.00		1.00	1.00	
Incremental Delay, d2	0.2	0.3		0.1	0.2		0.1	0.3		0.1	0.3	
Delay (s)	7.9	9.4		11.6	12.4		12.1	13.0		12.0	13.1	
Level of Service	A	A		B	B		B	B		B	B	
Approach Delay (s)		9.1			12.3			12.9			13.1	
Approach LOS		A			B			B			B	

Intersection Summary			
HCM Average Control Delay	11.6	HCM Level of Service	B
HCM Volume to Capacity ratio	0.21		
Actuated Cycle Length (s)	75.0	Sum of lost time (s)	8.0
Intersection Capacity Utilization	38.2%	ICU Level of Service	A
Analysis Period (min)	15		

c Critical Lane Group

Movement	EBL	EBT	EBR	WBL	WBT	WBR	NBL	NBT	NBR	SBL	SBT	SBR
Lane Configurations												
Ideal Flow (vphpl)	1700	1800	1800	1700	1800	1800	1700	1800	1800	1700	1800	1800
Total Lost time (s)	4.0	4.0	4.0	4.0	4.0		4.0	4.0		4.0	4.0	4.0
Lane Util. Factor	1.00	*1.00	1.00	1.00	*1.00		1.00	*1.00		1.00	*1.00	1.00
Frt	1.00	1.00	1.00	1.00	1.00		1.00	1.00		1.00	1.00	1.00
Flt Protected	1.00	1.00	1.00	1.00	1.00		1.00	1.00		1.00	1.00	1.00
Satd. Flow (prot)	1700	3600	1800	1700	3600		1700	3600		1700	3600	1800
Flt Permitted	1.00	1.00	1.00	1.00	1.00		1.00	1.00		1.00	1.00	1.00
Satd. Flow (perm)	1700	3600	1800	1700	3600		1700	3600		1700	3600	1800
Volume (vph)	46	828	317	25	269	9	119	115	31	24	172	56
Peak-hour factor, PHF	0.91	0.91	0.91	0.91	0.91	0.91	0.91	0.91	0.91	0.91	0.91	0.91
Adj. Flow (vph)	51	910	348	27	296	10	131	126	34	26	189	62
RTOR Reduction (vph)	0	0	218	0	3	0	0	26	0	0	0	48
Lane Group Flow (vph)	51	910	130	27	303	0	131	134	0	26	189	14
Turn Type	Prot		Perm	Prot			pm+pt			pm+pt		Perm
Protected Phases	7	4		3	8		5	2		1	6	
Permitted Phases			4				2			6		6
Actuated Green, G (s)	7.0	28.0	28.0	7.0	28.0		24.0	17.0		24.0	17.0	17.0
Effective Green, g (s)	7.0	28.0	28.0	7.0	28.0		24.0	17.0		24.0	17.0	17.0
Actuated g/C Ratio	0.09	0.37	0.37	0.09	0.37		0.32	0.23		0.32	0.23	0.23
Clearance Time (s)	4.0	4.0	4.0	4.0	4.0		4.0	4.0		4.0	4.0	4.0
Lane Grp Cap (vph)	159	1344	672	159	1344		635	816		635	816	408
v/s Ratio Prot	c0.03	c0.25		0.02	0.08		c0.02	0.04		0.00	0.05	
v/s Ratio Perm			0.07				0.06			0.01		0.01
v/c Ratio	0.32	0.68	0.19	0.17	0.23		0.21	0.16		0.04	0.23	0.03
Uniform Delay, d1	31.8	19.7	15.9	31.3	16.1		18.8	23.3		17.6	23.7	22.6
Progression Factor	1.00	1.00	1.00	0.75	1.09		1.00	1.00		1.00	1.00	1.00
Incremental Delay, d2	5.3	2.8	0.6	2.3	0.4		0.7	0.4		0.1	0.7	0.2
Delay (s)	37.0	22.5	16.5	25.8	18.0		19.5	23.7		17.7	24.3	22.8
Level of Service	D	C	B	C	B		B	C		B	C	C
Approach Delay (s)		21.4			18.6			21.8			23.4	
Approach LOS		C			B			C			C	

Intersection Summary			
HCM Average Control Delay	21.3	HCM Level of Service	C
HCM Volume to Capacity ratio	0.43		
Actuated Cycle Length (s)	75.0	Sum of lost time (s)	12.0
Intersection Capacity Utilization	53.2%	ICU Level of Service	A
Analysis Period (min)	15		

c Critical Lane Group

Movement	EBL	EBT	WBT	WBR	SBL	SBR
Lane Configurations						
Sign Control		Free	Free		Stop	
Grade		0%	0%		0%	
Volume (veh/h)	38	372	240	34	23	28
Peak Hour Factor	0.95	0.95	0.95	0.95	0.95	0.95
Hourly flow rate (vph)	40	392	253	36	24	29
Pedestrians						
Lane Width (ft)						
Walking Speed (ft/s)						
Percent Blockage						
Right turn flare (veh)						
Median type					None	
Median storage veh)						
Upstream signal (ft)		664	704			
pX, platoon unblocked						
vC, conflicting volume	288				546	144
vC1, stage 1 conf vol	0					
vC2, stage 2 conf vol	0					
vCu, unblocked vol	288				546	144
tC, single (s)	4.1				6.8	6.9
tC, 2 stage (s)	3.1					
tF (s)	2.2				3.5	3.3
p0 queue free %	96				95	97
cM capacity (veh/h)	993				453	883

Direction, Lane #	EB 1	EB 2	WB 1	WB 2	SB 1	SB 2
Volume Total	171	261	168	120	24	29
Volume Left	40	0	0	0	24	0
Volume Right	0	0	0	36	0	29
cSH	993	1700	1700	1700	453	883
Volume to Capacity	0.04	0.15	0.10	0.07	0.05	0.03
Queue Length 95th (ft)	3	0	0	0	4	3
Control Delay (s)	2.4	0.0	0.0	0.0	13.4	9.2
Lane LOS	A				B	A
Approach Delay (s)	0.9		0.0		11.1	
Approach LOS					B	

Intersection Summary			
Average Delay	1.3		
Intersection Capacity Utilization	33.5%	ICU Level of Service	A
Analysis Period (min)	15		

Movement	EBL	EBT	EBR	WBL	WBT	WBR	NBL	NBT	NBR	SBL	SBT	SBR
Lane Configurations												
Ideal Flow (vphpl)	1700	1800	1800	1700	1800	1800	1700	1800	1800	1700	1800	1800
Total Lost time (s)	4.0	4.0		4.0	4.0		4.0	4.0		4.0	4.0	
Lane Util. Factor	1.00	*1.00		1.00	*1.00		1.00	1.00		1.00	1.00	
Frt	1.00	1.00		1.00	1.00		1.00	1.00		1.00	1.00	
Flt Protected	1.00	1.00		1.00	1.00		1.00	1.00		1.00	1.00	
Satd. Flow (prot)	1700	3600		1700	3600		1700	1800		1700	1800	
Flt Permitted	1.00	1.00		1.00	1.00		1.00	1.00		1.00	1.00	
Satd. Flow (perm)	1700	3600		1700	3600		1700	1800		1700	1800	
Volume (vph)	37	705	77	46	297	19	39	159	52	53	255	24
Peak-hour factor, PHF	0.86	0.86	0.86	0.86	0.86	0.86	0.86	0.86	0.86	0.86	0.86	0.86
Adj. Flow (vph)	43	820	90	53	345	22	45	185	60	62	297	28
RTOR Reduction (vph)	0	12	0	0	7	0	0	16	0	0	5	0
Lane Group Flow (vph)	43	898	0	53	360	0	45	229	0	62	320	0
Turn Type	Perm			Perm			Perm			Perm		
Protected Phases		4			8			2			6	
Permitted Phases	4			8			2			6		
Actuated Green, G (s)	36.0	36.0		36.0	36.0		31.0	31.0		31.0	31.0	
Effective Green, g (s)	36.0	36.0		36.0	36.0		31.0	31.0		31.0	31.0	
Actuated g/C Ratio	0.48	0.48		0.48	0.48		0.41	0.41		0.41	0.41	
Clearance Time (s)	4.0	4.0		4.0	4.0		4.0	4.0		4.0	4.0	
Lane Grp Cap (vph)	816	1728		816	1728		703	744		703	744	
v/s Ratio Prot		c0.25			0.10			0.13			c0.18	
v/s Ratio Perm	0.03			0.03			0.03			0.04		
v/c Ratio	0.05	0.52		0.06	0.21		0.06	0.31		0.09	0.43	
Uniform Delay, d1	10.4	13.5		10.5	11.3		13.3	14.8		13.4	15.7	
Progression Factor	1.91	2.13		1.00	1.00		0.62	0.51		1.00	1.00	
Incremental Delay, d2	0.1	0.9		0.2	0.3		0.2	1.0		0.2	1.8	
Delay (s)	20.0	29.7		10.6	11.5		8.3	8.5		13.6	17.5	
Level of Service	B	C		B	B		A	A		B	B	
Approach Delay (s)		29.2			11.4			8.5			16.9	
Approach LOS		C			B			A			B	

Intersection Summary			
HCM Average Control Delay	20.3	HCM Level of Service	C
HCM Volume to Capacity ratio	0.48		
Actuated Cycle Length (s)	75.0	Sum of lost time (s)	8.0
Intersection Capacity Utilization	58.9%	ICU Level of Service	B
Analysis Period (min)	15		

c Critical Lane Group

Movement	EBL	EBT	EBR	WBL	WBT	WBR	NBL	NBT	NBR	SBL	SBT	SBR
Lane Configurations												
Ideal Flow (vphpl)	1700	1800	1800	1700	1800	1800	1700	1800	1800	1700	1800	1800
Total Lost time (s)	4.0	4.0		4.0	4.0		4.0	4.0		4.0	4.0	
Lane Util. Factor	1.00	*1.00		1.00	*1.00		1.00	1.00		1.00	1.00	
Frt	1.00	1.00		1.00	1.00		1.00	1.00		1.00	1.00	
Flt Protected	1.00	1.00		1.00	1.00		1.00	1.00		1.00	1.00	
Satd. Flow (prot)	1700	3600		1700	3600		1700	1800		1700	1800	
Flt Permitted	1.00	1.00		1.00	1.00		1.00	1.00		1.00	1.00	
Satd. Flow (perm)	1700	3600		1700	3600		1700	1800		1700	1800	
Volume (vph)	6	70	31	13	32	12	23	257	99	14	356	22
Peak-hour factor, PHF	0.87	0.87	0.87	0.87	0.87	0.87	0.87	0.87	0.87	0.87	0.87	0.87
Adj. Flow (vph)	7	80	36	15	37	14	26	295	114	16	409	25
RTOR Reduction (vph)	0	28	0	0	11	0	0	19	0	0	3	0
Lane Group Flow (vph)	7	88	0	15	40	0	26	390	0	16	431	0
Turn Type	pm+pt			pm+pt			pm+pt			Perm		
Protected Phases	7	4		3	8		5	2			6	
Permitted Phases	4			8			2			6		
Actuated Green, G (s)	22.0	16.0		22.0	16.0		41.0	41.0		31.0	31.0	
Effective Green, g (s)	22.0	16.0		22.0	16.0		41.0	41.0		31.0	31.0	
Actuated g/C Ratio	0.29	0.21		0.29	0.21		0.55	0.55		0.41	0.41	
Clearance Time (s)	4.0	4.0		4.0	4.0		4.0	4.0		4.0	4.0	
Lane Grp Cap (vph)	589	768		589	768		929	984		703	744	
v/s Ratio Prot	0.00	c0.02		c0.00	0.01		0.00	c0.22			c0.24	
v/s Ratio Perm	0.00			0.01			0.01			0.01		
v/c Ratio	0.01	0.11		0.03	0.05		0.03	0.40		0.02	0.58	
Uniform Delay, d1	18.8	23.8		18.9	23.5		9.1	9.8		13.0	17.0	
Progression Factor	1.00	1.00		1.00	1.00		2.05	2.06		0.78	0.70	
Incremental Delay, d2	0.0	0.3		0.1	0.1		0.0	1.0		0.1	3.1	
Delay (s)	18.8	24.1		19.0	23.6		18.7	21.3		10.3	15.0	
Level of Service	B	C		B	C		B	C		B	B	
Approach Delay (s)		23.8			22.5			21.1			14.8	
Approach LOS		C			C			C			B	

Intersection Summary			
HCM Average Control Delay	18.9	HCM Level of Service	B
HCM Volume to Capacity ratio	0.39		
Actuated Cycle Length (s)	75.0	Sum of lost time (s)	16.0
Intersection Capacity Utilization	35.5%	ICU Level of Service	A
Analysis Period (min)	15		

c Critical Lane Group

Movement	EBL	EBT	EBR	EBR2	WBL2	WBL	WBT	WBR	NBL2	NBL	NBT	NBR
Lane Configurations												
Ideal Flow (vphpl)	1700	1800	1800	1800	1600	1600	1800	1800	1700	1700	1800	1800
Total Lost time (s)	4.0	4.0	4.0			4.0	4.0			4.0	4.0	4.0
Lane Util. Factor	1.00	*1.00	*1.00			*1.00	*1.00			*1.00	*1.00	1.00
Frt	1.00	1.00	1.00			1.00	1.00			1.00	1.00	1.00
Flt Protected	1.00	1.00	1.00			1.00	1.00			1.00	1.00	1.00
Satd. Flow (prot)	1700	3600	1800			3200	3600			1700	3600	1800
Flt Permitted	1.00	1.00	1.00			1.00	1.00			1.00	1.00	1.00
Satd. Flow (perm)	1700	3600	1800			3200	3600			1700	3600	1800
Volume (vph)	71	376	69	2	55	128	286	20	23	50	171	54
Peak-hour factor, PHF	0.82	0.82	0.82	0.82	0.82	0.82	0.82	0.82	0.82	0.82	0.82	0.82
Adj. Flow (vph)	87	459	84	2	67	156	349	24	28	61	209	66
RTOR Reduction (vph)	0	0	1	0	0	0	7	0	0	0	0	52
Lane Group Flow (vph)	87	459	85	0	0	223	366	0	0	50	248	14
Turn Type	Prot		Perm		Prot	Prot			Prot	Prot		Perm
Protected Phases	5	2			1	1	6		3	3	8	
Permitted Phases			2									8
Actuated Green, G (s)	7.0	17.0	17.0			8.0	18.0			6.0	22.0	16.0
Effective Green, g (s)	7.0	17.0	17.0			8.0	18.0			6.0	22.0	16.0
Actuated g/C Ratio	0.09	0.23	0.23			0.11	0.24			0.08	0.29	0.21
Clearance Time (s)	4.0	4.0	4.0			4.0	4.0			4.0	4.0	4.0
Lane Grp Cap (vph)	159	816	408			341	864			136	1248	384
v/s Ratio Prot	0.05	c0.13				c0.07	0.10			c0.03	0.02	
v/s Ratio Perm			0.05								0.05	0.01
v/c Ratio	0.55	0.56	0.21			0.65	0.42			0.37	0.20	0.04
Uniform Delay, d1	32.5	25.7	23.5			32.2	24.1			32.7	19.9	23.4
Progression Factor	1.00	1.00	1.00			1.00	1.00			1.00	1.00	1.00
Incremental Delay, d2	12.9	2.8	1.2			9.4	1.5			7.5	0.4	0.2
Delay (s)	45.4	28.5	24.7			41.6	25.6			40.2	20.2	23.6
Level of Service	D	C	C			D	C			D	C	C
Approach Delay (s)		30.3					31.6				23.6	
Approach LOS		C					C				C	

Intersection Summary			
HCM Average Control Delay	30.9	HCM Level of Service	C
HCM Volume to Capacity ratio	0.56		
Actuated Cycle Length (s)	75.0	Sum of lost time (s)	20.0
Intersection Capacity Utilization	58.3%	ICU Level of Service	B
Analysis Period (min)	15		

c Critical Lane Group

Movement	SBL	SBT	SBR	SBR2	NEL2	NEL	NER	NER2
Lane Configurations								
Ideal Flow (vphpl)	1700	1800	1800	1800	1600	1600	1800	1800
Total Lost time (s)	4.0	4.0	4.0			4.0	4.0	
Lane Util. Factor	1.00	*1.00	*1.00			*1.00	*1.00	
Frt	1.00	1.00	1.00			1.00	1.00	
Flt Protected	1.00	1.00	1.00			1.00	1.00	
Satd. Flow (prot)	1700	1800	1800			3200	3600	
Flt Permitted	1.00	1.00	1.00			1.00	1.00	
Satd. Flow (perm)	1700	1800	1800			3200	3600	
Volume (vph)	27	168	37	42	4	108	182	38
Peak-hour factor, PHF	0.82	0.82	0.82	0.82	0.82	0.82	0.82	0.82
Adj. Flow (vph)	33	205	45	51	5	132	222	46
RTOR Reduction (vph)	0	0	40	0	0	0	25	0
Lane Group Flow (vph)	33	205	56	0	0	137	243	0
Turn Type	Prot		Perm		Split		Perm	
Protected Phases	7	4			9	9		
Permitted Phases			4				9	
Actuated Green, G (s)	6.0	16.0	16.0			8.0	8.0	
Effective Green, g (s)	6.0	16.0	16.0			8.0	8.0	
Actuated g/C Ratio	0.08	0.21	0.21			0.11	0.11	
Clearance Time (s)	4.0	4.0	4.0			4.0	4.0	
Lane Grp Cap (vph)	136	384	384			341	384	
v/s Ratio Prot	0.02	c0.11				0.04		
v/s Ratio Perm			0.03				c0.07	
v/c Ratio	0.24	0.53	0.15			0.40	0.63	
Uniform Delay, d1	32.4	26.2	24.0			31.3	32.1	
Progression Factor	1.00	1.00	1.00			1.00	1.00	
Incremental Delay, d2	4.2	5.2	0.8			3.5	7.7	
Delay (s)	36.6	31.4	24.7			34.8	39.8	
Level of Service	D	C	C			C	D	
Approach Delay (s)		30.0				38.1		
Approach LOS		C				D		

Intersection Summary

OPENING YEAR (2014) NO PROJECT CONDITIONS

PM PEAK HOUR

Movement	EBL	EBT	EBR	WBL	WBT	WBR	NBL	NBT	NBR	SBL	SBT	SBR
Lane Configurations												
Sign Control		Free			Free			Stop			Stop	
Grade		0%			0%			0%			0%	
Volume (veh/h)	2	209	73	46	135	1	6	2	14	0	0	0
Peak Hour Factor	0.94	0.94	0.94	0.94	0.94	0.94	0.94	0.94	0.94	0.94	0.94	0.94
Hourly flow rate (vph)	2	222	78	49	144	1	6	2	15	0	0	0
Pedestrians												
Lane Width (ft)												
Walking Speed (ft/s)												
Percent Blockage												
Right turn flare (veh)												
Median type								None			None	
Median storage veh)												
Upstream signal (ft)												
pX, platoon unblocked												
vC, conflicting volume	145			300			469	469	111	373	546	144
vC1, stage 1 conf vol												
vC2, stage 2 conf vol												
vCu, unblocked vol	145			300			469	469	111	373	546	144
tC, single (s)	4.1			4.1			7.5	6.5	6.9	7.5	6.5	6.9
tC, 2 stage (s)												
tF (s)	2.2			2.2			3.5	4.0	3.3	3.5	4.0	3.3
p0 queue free %	100			96			99	100	98	100	100	100
cM capacity (veh/h)	1450			1273			468	475	927	536	430	883

Direction, Lane #	EB 1	EB 2	EB 3	WB 1	NB 1
Volume Total	76	148	78	194	23
Volume Left	2	0	0	49	6
Volume Right	0	0	78	1	15
cSH	1450	1700	1700	1273	685
Volume to Capacity	0.00	0.09	0.05	0.04	0.03
Queue Length 95th (ft)	0	0	0	3	3
Control Delay (s)	0.2	0.0	0.0	2.3	10.4
Lane LOS	A			A	B
Approach Delay (s)	0.1			2.3	10.4
Approach LOS					B

Intersection Summary			
Average Delay	1.3		
Intersection Capacity Utilization	29.7%	ICU Level of Service	A
Analysis Period (min)	15		

Year 2014 No Build PM Peak Hour
City of San Bernardino
Redlands First Mile

Level Of Service Computation Report
2000 HCM 4-Way Stop Method (Base Volume Alternative)

Intersection #2 K St and 2nd St

Cycle (sec):	100	Critical Vol./Cap.(X):	0.273
Loss Time (sec):	0 (Y+R=4.0 sec)	Average Delay (sec/veh):	9.7
Optimal Cycle:	0	Level Of Service:	A

Street Name:	K St						2nd St					
Approach:	North Bound			South Bound			East Bound			West Bound		
Movement:	L	T	R	L	T	R	L	T	R	L	T	R
Control:	Stop Sign			Stop Sign			Stop Sign			Stop Sign		
Rights:	Include			Include			Include			Include		
Min. Green:	0	0	0	0	0	0	0	0	0	0	0	0
Lanes:	0 0	1! 0	0	0 0	1! 0	0	1 0	1 1	0	1 0	1 1	0
Volume Module:												
Base Vol:	36	6	24	37	27	23	9	311	22	33	301	9
Growth Adj:	1.00	1.00	1.00	1.00	1.00	1.00	1.00	1.00	1.00	1.00	1.00	1.00
Initial Bse:	36	6	24	37	27	23	9	311	22	33	301	9
User Adj:	1.00	1.00	1.00	1.00	1.00	1.00	1.00	1.00	1.00	1.00	1.00	1.00
PHF Adj:	0.92	0.92	0.92	0.92	0.92	0.92	0.92	0.92	0.92	0.92	0.92	0.92
PHF Volume:	39	7	26	40	29	25	10	338	24	36	327	10
Reduct Vol:	0	0	0	0	0	0	0	0	0	0	0	0
Reduced Vol:	39	7	26	40	29	25	10	338	24	36	327	10
PCE Adj:	1.00	1.00	1.00	1.00	1.00	1.00	1.00	1.00	1.00	1.00	1.00	1.00
MLF Adj:	1.00	1.00	1.00	1.00	1.00	1.00	1.00	1.00	1.00	1.00	1.00	1.00
FinalVolume:	39	7	26	40	29	25	10	338	24	36	327	10
Saturation Flow Module:												
Adjustment:	1.00	1.00	1.00	1.00	1.00	1.00	1.00	1.00	1.00	1.00	1.00	1.00
Lanes:	0.55	0.09	0.36	0.43	0.31	0.26	1.00	1.87	0.13	1.00	1.94	0.06
Final Sat.:	326	54	217	256	187	159	601	1238	88	602	1282	38
Capacity Analysis Module:												
Vol/Sat:	0.12	0.12	0.12	0.16	0.16	0.16	0.02	0.27	0.27	0.06	0.26	0.25
Crit Moves:	****				****			****			****	
Delay/Veh:	9.2	9.2	9.2	9.5	9.5	9.5	8.6	9.9	9.8	8.9	9.8	9.7
Delay Adj:	1.00	1.00	1.00	1.00	1.00	1.00	1.00	1.00	1.00	1.00	1.00	1.00
AdjDel/Veh:	9.2	9.2	9.2	9.5	9.5	9.5	8.6	9.9	9.8	8.9	9.8	9.7
LOS by Move:	A	A	A	A	A	A	A	A	A	A	A	A
ApproachDel:	9.2			9.5			9.9			9.7		
Delay Adj:	1.00			1.00			1.00			1.00		
ApprAdjDel:	9.2			9.5			9.9			9.7		
LOS by Appr:	A			A			A			A		
AllWayAvgQ:	0.1	0.1	0.1	0.2	0.2	0.2	0.0	0.4	0.3	0.1	0.3	0.3

Note: Queue reported is the number of cars per lane.

Movement	EBL	EBT	EBR	WBL	WBT	WBR	NBL	NBT	NBR	SBL	SBT	SBR
Lane Configurations												
Ideal Flow (vphpl)	1800	1800	1800	1800	1800	1800	1800	1800	1800	1800	1800	1800
Total Lost time (s)		4.0			4.0			4.0	4.0		4.0	4.0
Lane Util. Factor		*1.00			*1.00			1.00	1.00		1.00	1.00
Frt		1.00			1.00			1.00	1.00		1.00	1.00
Flt Protected		1.00			1.00			1.00	1.00		1.00	1.00
Satd. Flow (prot)		3600			3600			1800	1800		1800	1800
Flt Permitted		1.00			1.00			1.00	1.00		1.00	1.00
Satd. Flow (perm)		3600			3600			1800	1800		1800	1800
Volume (vph)	6	358	38	115	532	14	35	38	138	5	47	24
Peak-hour factor, PHF	0.92	0.92	0.92	0.92	0.92	0.92	0.92	0.92	0.92	0.92	0.92	0.92
Adj. Flow (vph)	7	389	41	125	578	15	38	41	150	5	51	26
RTOR Reduction (vph)	0	11	0	0	2	0	0	0	112	0	0	21
Lane Group Flow (vph)	0	426	0	0	716	0	0	79	38	0	56	5
Turn Type	Perm			Perm			Split		Perm	Split		Perm
Protected Phases		4			8		2	2		6	6	
Permitted Phases	4			8					2			6
Actuated Green, G (s)		30.0			30.0			19.0	19.0		14.0	14.0
Effective Green, g (s)		30.0			30.0			19.0	19.0		14.0	14.0
Actuated g/C Ratio		0.40			0.40			0.25	0.25		0.19	0.19
Clearance Time (s)		4.0			4.0			4.0	4.0		4.0	4.0
Lane Grp Cap (vph)		1440			1440			456	456		336	336
v/s Ratio Prot								c0.04			c0.03	
v/s Ratio Perm		0.12			0.20				0.02			0.00
v/c Ratio		0.30			0.50			0.17	0.08		0.17	0.01
Uniform Delay, d1		15.3			16.9			21.9	21.4		25.6	24.9
Progression Factor		1.00			0.90			1.00	1.00		1.00	1.00
Incremental Delay, d2		0.5			1.2			0.8	0.4		1.1	0.1
Delay (s)		15.8			16.4			22.7	21.7		26.7	25.0
Level of Service		B			B			C	C		C	C
Approach Delay (s)		15.8			16.4			22.1			26.1	
Approach LOS		B			B			C			C	

Intersection Summary			
HCM Average Control Delay	17.7	HCM Level of Service	B
HCM Volume to Capacity ratio	0.33		
Actuated Cycle Length (s)	75.0	Sum of lost time (s)	12.0
Intersection Capacity Utilization	52.2%	ICU Level of Service	A
Analysis Period (min)	15		

c Critical Lane Group

Movement	EBT	EBR	WBL	WBT	NBL	NBR
Lane Configurations						
Sign Control	Free			Free	Stop	
Grade	0%			0%	0%	
Volume (veh/h)	216	21	23	178	2	14
Peak Hour Factor	0.83	0.83	0.83	0.83	0.83	0.83
Hourly flow rate (vph)	260	25	28	214	2	17
Pedestrians						
Lane Width (ft)						
Walking Speed (ft/s)						
Percent Blockage						
Right turn flare (veh)						
Median type					None	
Median storage veh)						
Upstream signal (ft)				682		
pX, platoon unblocked						
vC, conflicting volume			286		436	143
vC1, stage 1 conf vol						
vC2, stage 2 conf vol						
vCu, unblocked vol			286		436	143
tC, single (s)			4.1		6.8	6.9
tC, 2 stage (s)						
tF (s)			2.2		3.5	3.3
p0 queue free %			98		100	98
cM capacity (veh/h)			1288		542	885

Direction, Lane #	EB 1	EB 2	WB 1	WB 2	NB 1
Volume Total	173	112	99	143	19
Volume Left	0	0	28	0	2
Volume Right	0	25	0	0	17
cSH	1700	1700	1288	1700	820
Volume to Capacity	0.10	0.07	0.02	0.08	0.02
Queue Length 95th (ft)	0	0	2	0	2
Control Delay (s)	0.0	0.0	2.3	0.0	9.5
Lane LOS			A		A
Approach Delay (s)	0.0		1.0		9.5
Approach LOS					A

Intersection Summary			
Average Delay	0.8		
Intersection Capacity Utilization	26.2%	ICU Level of Service	A
Analysis Period (min)	15		

Year 2014 No Build PM Peak Hour
City of San Bernardino
Redlands First Mile

Level Of Service Computation Report
2000 HCM Unsignalized Method (Base Volume Alternative)

Intersection #5 J St and 2nd St

Average Delay (sec/veh): 1.7 Worst Case Level Of Service: C[17.8]

Street Name:	J St						2nd St					
Approach:	North Bound			South Bound			East Bound			West Bound		
Movement:	L	T	R	L	T	R	L	T	R	L	T	R
Control:	Stop Sign			Stop Sign			Uncontrolled			Uncontrolled		
Rights:	Include			Include			Include			Include		
Lanes:	0 0 1! 0 0			0 0 1! 0 0			1 0 1 1 0			1 0 1 1 0		
Volume Module:												
Base Vol:	12	4	35	22	15	4	7	478	8	20	314	13
Growth Adj:	1.00	1.00	1.00	1.00	1.00	1.00	1.00	1.00	1.00	1.00	1.00	1.00
Initial Bse:	12	4	35	22	15	4	7	478	8	20	314	13
User Adj:	1.00	1.00	1.00	1.00	1.00	1.00	1.00	1.00	1.00	1.00	1.00	1.00
PHF Adj:	0.95	0.95	0.95	0.95	0.95	0.95	0.95	0.95	0.95	0.95	0.95	0.95
PHF Volume:	13	4	37	23	16	4	7	503	8	21	331	14
Reduct Vol:	0	0	0	0	0	0	0	0	0	0	0	0
FinalVolume:	13	4	37	23	16	4	7	503	8	21	331	14
Critical Gap Module:												
Critical Gp:	7.5	6.5	6.9	7.5	6.5	6.9	4.1	xxxx	xxxxx	4.1	xxxx	xxxxx
FollowUpTim:	3.5	4.0	3.3	3.5	4.0	3.3	2.2	xxxx	xxxxx	2.2	xxxx	xxxxx
Capacity Module:												
Cnflict Vol:	737	908	256	648	906	172	344	xxxx	xxxxx	512	xxxx	xxxxx
Potent Cap.:	310	277	750	359	278	848	1226	xxxx	xxxxx	1064	xxxx	xxxxx
Move Cap.:	289	270	750	331	271	848	1226	xxxx	xxxxx	1064	xxxx	xxxxx
Volume/Cap:	0.04	0.02	0.05	0.07	0.06	0.00	0.01	xxxx	xxxx	0.02	xxxx	xxxx
Level Of Service Module:												
2Way95thQ:	xxxx	xxxx	xxxxx	xxxx	xxxx	xxxxx	0.0	xxxx	xxxxx	0.1	xxxx	xxxxx
Control Del:	xxxxx	xxxx	xxxxx	xxxxx	xxxx	xxxxx	8.0	xxxx	xxxxx	8.5	xxxx	xxxxx
LOS by Move:	*	*	*	*	*	*	A	*	*	A	*	*
Movement:	LT	LTR	RT	LT	LTR	RT	LT	LTR	RT	LT	LTR	RT
Shared Cap.:	xxxx	495	xxxxx	xxxx	324	xxxxx	xxxx	xxxx	xxxxx	xxxx	xxxx	xxxxx
SharedQueue:	xxxxx	0.4	xxxxx	xxxxx	0.5	xxxxx	xxxxx	xxxx	xxxxx	xxxxx	xxxx	xxxxx
Shrd ConDel:	xxxxx	13.2	xxxxx	xxxxx	17.8	xxxxx	xxxxx	xxxx	xxxxx	xxxxx	xxxx	xxxxx
Shared LOS:	*	B	*	*	C	*	*	*	*	*	*	*
ApproachDel:	13.2			17.8			xxxxxx			xxxxxx		
ApproachLOS:	B			C			*			*		

Note: Queue reported is the number of cars per lane.

Movement	EBL	EBT	EBR	WBL	WBT	WBR	NBL	NBT	NBR	SBL	SBT	SBR
Lane Configurations												
Sign Control		Free			Free			Stop			Stop	
Grade		0%			0%			0%			0%	
Volume (veh/h)	24	458	3	46	567	20	9	6	17	13	3	8
Peak Hour Factor	0.97	0.97	0.97	0.97	0.97	0.97	0.97	0.97	0.97	0.97	0.97	0.97
Hourly flow rate (vph)	25	472	3	47	585	21	9	6	18	13	3	8
Pedestrians												
Lane Width (ft)												
Walking Speed (ft/s)												
Percent Blockage												
Right turn flare (veh)												
Median type								None			None	
Median storage veh)												
Upstream signal (ft)		704			682							
pX, platoon unblocked	0.98						0.98	0.98		0.98	0.98	0.98
vC, conflicting volume	605			475			920	1223	238	996	1214	303
vC1, stage 1 conf vol												
vC2, stage 2 conf vol												
vCu, unblocked vol	578			475			899	1208	238	976	1199	269
tC, single (s)	4.1			4.1			7.5	6.5	6.9	7.5	6.5	6.9
tC, 2 stage (s)												
tF (s)	2.2			2.2			3.5	4.0	3.3	3.5	4.0	3.3
p0 queue free %	97			96			96	96	98	93	98	99
cM capacity (veh/h)	986			1097			215	169	770	184	171	721

Direction, Lane #	EB 1	EB 2	WB 1	WB 2	NB 1	SB 1
Volume Total	261	239	340	313	33	25
Volume Left	25	0	47	0	9	13
Volume Right	0	3	0	21	18	8
cSH	986	1700	1097	1700	322	242
Volume to Capacity	0.03	0.14	0.04	0.18	0.10	0.10
Queue Length 95th (ft)	2	0	3	0	8	8
Control Delay (s)	1.1	0.0	1.6	0.0	17.5	21.6
Lane LOS	A		A		C	C
Approach Delay (s)	0.6		0.8		17.5	21.6
Approach LOS					C	C

Intersection Summary			
Average Delay	1.6		
Intersection Capacity Utilization	46.2%	ICU Level of Service	A
Analysis Period (min)	15		

Movement	EBT	EBR	WBL	WBT	NBL	NBR
Lane Configurations						
Ideal Flow (vphpl)	1800	1800	1800	1800	1700	1800
Total Lost time (s)	4.0			4.0		
Lane Util. Factor	*1.00			*1.00		
Frt	1.00			1.00		
Flt Protected	1.00			1.00		
Satd. Flow (prot)	3600			3600		
Flt Permitted	1.00			1.00		
Satd. Flow (perm)	3600			3600		
Volume (vph)	215	0	0	132	0	0
Peak-hour factor, PHF	0.86	0.86	0.86	0.86	0.86	0.86
Adj. Flow (vph)	250	0	0	153	0	0
RTOR Reduction (vph)	0	0	0	0	0	0
Lane Group Flow (vph)	250	0	0	153	0	0
Turn Type			Perm			Perm
Protected Phases	4			8	2	
Permitted Phases			8			2
Actuated Green, G (s)	36.0			36.0		
Effective Green, g (s)	36.0			36.0		
Actuated g/C Ratio	0.48			0.48		
Clearance Time (s)	4.0			4.0		
Lane Grp Cap (vph)	1728			1728		
v/s Ratio Prot	c0.07			0.04		
v/s Ratio Perm						
v/c Ratio	0.14			0.09		
Uniform Delay, d1	10.9			10.6		
Progression Factor	1.00			1.00		
Incremental Delay, d2	0.2			0.1		
Delay (s)	11.1			10.7		
Level of Service	B			B		
Approach Delay (s)	11.1			10.7	0.0	
Approach LOS	B			B	A	

Intersection Summary			
HCM Average Control Delay	10.9	HCM Level of Service	B
HCM Volume to Capacity ratio	0.14		
Actuated Cycle Length (s)	75.0	Sum of lost time (s)	39.0
Intersection Capacity Utilization	9.6%	ICU Level of Service	A
Analysis Period (min)	15		

c Critical Lane Group

Movement	EBL	EBT	EBR	WBL	WBT	WBR	NBL	NBT	NBR	SBL	SBT	SBR
Lane Configurations												
Ideal Flow (vphpl)	1700	1800	1800	1700	1800	1800	1800	1800	1800	1800	1800	1800
Total Lost time (s)	4.0	4.0		4.0	4.0			4.0	4.0		4.0	
Lane Util. Factor	1.00	*1.00		1.00	*1.00			*1.00	1.00		*1.00	
Frt	1.00	1.00		1.00	1.00			1.00	1.00		1.00	
Flt Protected	1.00	1.00		1.00	1.00			1.00	1.00		1.00	
Satd. Flow (prot)	1700	3600		1700	3600			3600	1800		3600	
Flt Permitted	1.00	1.00		1.00	1.00			1.00	1.00		1.00	
Satd. Flow (perm)	1700	3600		1700	3600			3600	1800		3600	
Volume (vph)	11	360	15	221	360	8	20	27	208	14	20	19
Peak-hour factor, PHF	0.97	0.97	0.97	0.97	0.97	0.97	0.97	0.97	0.97	0.97	0.97	0.97
Adj. Flow (vph)	11	371	15	228	371	8	21	28	214	14	21	20
RTOR Reduction (vph)	0	4	0	0	2	0	0	0	126	0	12	0
Lane Group Flow (vph)	11	382	0	228	377	0	0	49	88	0	43	0
Turn Type	Perm			Perm			Perm		Perm	Perm		
Protected Phases		4			8			2			6	
Permitted Phases	4			8			2		2	6		
Actuated Green, G (s)	36.0	36.0		36.0	36.0			31.0	31.0		31.0	
Effective Green, g (s)	36.0	36.0		36.0	36.0			31.0	31.0		31.0	
Actuated g/C Ratio	0.48	0.48		0.48	0.48			0.41	0.41		0.41	
Clearance Time (s)	4.0	4.0		4.0	4.0			4.0	4.0		4.0	
Lane Grp Cap (vph)	816	1728		816	1728			1488	744		1488	
v/s Ratio Prot		0.11			0.10							
v/s Ratio Perm	0.01			c0.13				0.01	c0.05		0.01	
v/c Ratio	0.01	0.22		0.28	0.22			0.03	0.12		0.03	
Uniform Delay, d1	10.2	11.3		11.7	11.3			13.1	13.6		13.1	
Progression Factor	1.00	1.00		0.93	0.90			1.05	2.44		1.00	
Incremental Delay, d2	0.0	0.3		0.8	0.3			0.0	0.3		0.0	
Delay (s)	10.2	11.6		11.7	10.5			13.7	33.4		13.1	
Level of Service	B	B		B	B			B	C		B	
Approach Delay (s)		11.6			10.9			29.7			13.1	
Approach LOS		B			B			C			B	

Intersection Summary			
HCM Average Control Delay	15.0	HCM Level of Service	B
HCM Volume to Capacity ratio	0.21		
Actuated Cycle Length (s)	75.0	Sum of lost time (s)	8.0
Intersection Capacity Utilization	42.5%	ICU Level of Service	A
Analysis Period (min)	15		

c Critical Lane Group

Movement	EBL	EBT	EBR	WBL	WBT	WBR	NBL	NBT	NBR	SBL	SBT	SBR
Lane Configurations												
Ideal Flow (vphpl)	1800	1800	1800	1800	1800	1800	1800	1800	1800	1800	1800	1800
Total Lost time (s)		4.0			4.0			4.0			4.0	
Lane Util. Factor		*1.00			*1.00			*1.00			*1.00	
Frt		1.00			1.00			1.00			1.00	
Flt Protected		1.00			1.00			1.00			1.00	
Satd. Flow (prot)		3600			3600			3600			3600	
Flt Permitted		1.00			1.00			1.00			1.00	
Satd. Flow (perm)		3600			3600			3600			3600	
Volume (vph)	104	380	15	45	562	57	13	151	62	55	96	116
Peak-hour factor, PHF	0.95	0.95	0.95	0.95	0.95	0.95	0.95	0.95	0.95	0.95	0.95	0.95
Adj. Flow (vph)	109	400	16	47	592	60	14	159	65	58	101	122
RTOR Reduction (vph)	0	3	0	0	10	0	0	42	0	0	78	0
Lane Group Flow (vph)	0	522	0	0	689	0	0	196	0	0	203	0
Turn Type	Perm			Perm			Perm			Perm		
Protected Phases		4			8			2			6	
Permitted Phases	4			8			2			6		
Actuated Green, G (s)		40.0			40.0			27.0			27.0	
Effective Green, g (s)		40.0			40.0			27.0			27.0	
Actuated g/C Ratio		0.53			0.53			0.36			0.36	
Clearance Time (s)		4.0			4.0			4.0			4.0	
Lane Grp Cap (vph)		1920			1920			1296			1296	
v/s Ratio Prot												
v/s Ratio Perm		0.14			0.19			0.05			0.06	
v/c Ratio		0.27			0.36			0.15			0.16	
Uniform Delay, d1		9.6			10.1			16.2			16.3	
Progression Factor		2.33			2.00			1.00			1.41	
Incremental Delay, d2		0.3			0.5			0.2			0.3	
Delay (s)		22.6			20.7			16.5			23.2	
Level of Service		C			C			B			C	
Approach Delay (s)		22.6			20.7			16.5			23.2	
Approach LOS		C			C			B			C	

Intersection Summary			
HCM Average Control Delay	21.1	HCM Level of Service	C
HCM Volume to Capacity ratio	0.28		
Actuated Cycle Length (s)	75.0	Sum of lost time (s)	8.0
Intersection Capacity Utilization	63.1%	ICU Level of Service	B
Analysis Period (min)	15		

c Critical Lane Group

Movement	EBL	EBT	EBR	WBL	WBT	WBR	NBL	NBT	NBR	SBL	SBT	SBR
Lane Configurations												
Ideal Flow (vphpl)	1800	1800	1800	1700	1800	1800	1800	1800	1800	1800	1800	1700
Total Lost time (s)		4.0		4.0	4.0						4.0	4.0
Lane Util. Factor		*1.00		1.00	*1.00						*1.00	*1.00
Frt		1.00		1.00	1.00						1.00	1.00
Flt Protected		1.00		1.00	1.00						1.00	1.00
Satd. Flow (prot)		3600		1700	3600						3600	3400
Flt Permitted		1.00		1.00	1.00						1.00	1.00
Satd. Flow (perm)		3600		1700	3600						3600	3400
Volume (vph)	0	206	13	8	84	0	0	0	0	104	279	61
Peak-hour factor, PHF	0.86	0.86	0.86	0.86	0.86	0.86	0.86	0.86	0.86	0.86	0.86	0.86
Adj. Flow (vph)	0	240	15	9	98	0	0	0	0	121	324	71
RTOR Reduction (vph)	0	5	0	0	0	0	0	0	0	0	0	47
Lane Group Flow (vph)	0	250	0	9	98	0	0	0	0	0	445	24
Turn Type				Prot						Split		Perm
Protected Phases		4		3	8					6	6	
Permitted Phases												6
Actuated Green, G (s)		26.0		21.0	51.0						31.0	31.0
Effective Green, g (s)		26.0		21.0	51.0						31.0	31.0
Actuated g/C Ratio		0.29		0.23	0.57						0.34	0.34
Clearance Time (s)		4.0		4.0	4.0						4.0	4.0
Lane Grp Cap (vph)		1040		397	2040						1240	1171
v/s Ratio Prot		c0.07		0.01	c0.03						c0.12	
v/s Ratio Perm												0.01
v/c Ratio		0.24		0.02	0.05						0.36	0.02
Uniform Delay, d1		24.5		26.6	8.7						22.1	19.5
Progression Factor		1.00		2.14	0.44						1.00	1.00
Incremental Delay, d2		0.5		0.1	0.0						0.8	0.0
Delay (s)		25.0		57.0	3.9						22.9	19.5
Level of Service		C		E	A						C	B
Approach Delay (s)		25.0			8.4			0.0			22.4	
Approach LOS		C			A			A			C	

Intersection Summary			
HCM Average Control Delay	21.5	HCM Level of Service	C
HCM Volume to Capacity ratio	0.24		
Actuated Cycle Length (s)	90.0	Sum of lost time (s)	12.0
Intersection Capacity Utilization	55.8%	ICU Level of Service	B
Analysis Period (min)	15		

c Critical Lane Group

Movement	EBL	EBT	EBR	WBL	WBT	WBR	NBL	NBT	NBR	SBL	SBT	SBR
Lane Configurations												
Ideal Flow (vphpl)	1800	1800	1800	1600	1800	1800	1800	1800	1800	1700	1800	1800
Total Lost time (s)		4.0	4.0	4.0	4.0					4.0	4.0	4.0
Lane Util. Factor		*1.00	1.00	*1.00	*1.00					*1.00	*1.00	*1.00
Frt		1.00	1.00	1.00	1.00					1.00	0.87	1.00
Flt Protected		1.00	1.00	1.00	1.00					1.00	1.00	1.00
Satd. Flow (prot)		5400	1800	3200	3600					1700	1559	1800
Flt Permitted		1.00	1.00	1.00	1.00					1.00	1.00	1.00
Satd. Flow (perm)		5400	1800	3200	3600					1700	1559	1800
Volume (vph)	0	431	157	718	360	0	0	0	0	56	13	233
Peak-hour factor, PHF	0.93	0.93	0.93	0.93	0.93	0.93	0.93	0.93	0.93	0.93	0.93	0.93
Adj. Flow (vph)	0	463	169	772	387	0	0	0	0	60	14	251
RTOR Reduction (vph)	0	0	133	0	0	0	0	0	0	0	92	105
Lane Group Flow (vph)	0	463	36	772	387	0	0	0	0	60	39	29
Turn Type			Perm	Prot						Split		Perm
Protected Phases		4		3	8					6	6	
Permitted Phases			4									6
Actuated Green, G (s)		16.0	16.0	31.0	51.0					16.0	16.0	16.0
Effective Green, g (s)		16.0	16.0	31.0	51.0					16.0	16.0	16.0
Actuated g/C Ratio		0.21	0.21	0.41	0.68					0.21	0.21	0.21
Clearance Time (s)		4.0	4.0	4.0	4.0					4.0	4.0	4.0
Lane Grp Cap (vph)		1152	384	1323	2448					363	333	384
v/s Ratio Prot		c0.09		c0.24	0.11					c0.04	0.02	
v/s Ratio Perm			0.02									0.02
v/c Ratio		0.40	0.09	0.58	0.16					0.17	0.12	0.07
Uniform Delay, d1		25.4	23.7	17.0	4.3					24.1	23.8	23.6
Progression Factor		0.81	0.96	1.00	1.00					1.00	1.00	1.00
Incremental Delay, d2		1.0	0.5	1.9	0.1					1.0	0.7	0.4
Delay (s)		21.5	23.3	18.9	4.4					25.0	24.5	24.0
Level of Service		C	C	B	A					C	C	C
Approach Delay (s)		22.0			14.1			0.0			24.4	
Approach LOS		C			B			A			C	

Intersection Summary			
HCM Average Control Delay	18.0	HCM Level of Service	B
HCM Volume to Capacity ratio	0.43		
Actuated Cycle Length (s)	75.0	Sum of lost time (s)	12.0
Intersection Capacity Utilization	49.1%	ICU Level of Service	A
Analysis Period (min)	15		

c Critical Lane Group

Movement	EBL	EBT	EBR	WBL	WBT	WBR	NBL	NBT	NBR	SBL	SBT	SBR
Lane Configurations												
Ideal Flow (vphpl)	1700	1800	1800	1800	1800	1800	1800	1800	1800	1800	1800	1800
Total Lost time (s)	4.0	4.0			4.0	4.0		4.0				
Lane Util. Factor	1.00	*1.00			*1.00	1.00		*1.00				
Frt	1.00	1.00			1.00	1.00		1.00				
Flt Protected	1.00	1.00			1.00	1.00		1.00				
Satd. Flow (prot)	1700	3600			5400	1800		3598				
Flt Permitted	1.00	1.00			1.00	1.00		1.00				
Satd. Flow (perm)	1700	3600			5400	1800		3598				
Volume (vph)	71	241	0	0	87	393	5	427	93	0	0	0
Peak-hour factor, PHF	0.86	0.86	0.86	0.86	0.86	0.86	0.86	0.86	0.86	0.86	0.86	0.86
Adj. Flow (vph)	83	280	0	0	101	457	6	497	108	0	0	0
RTOR Reduction (vph)	0	0	0	0	0	189	0	22	0	0	0	0
Lane Group Flow (vph)	83	280	0	0	101	268	0	589	0	0	0	0
Turn Type	Prot					Perm	Split					
Protected Phases	7	4			8		2	2				
Permitted Phases						8						
Actuated Green, G (s)	16.0	54.0			34.0	34.0		28.0				
Effective Green, g (s)	16.0	54.0			34.0	34.0		28.0				
Actuated g/C Ratio	0.18	0.60			0.38	0.38		0.31				
Clearance Time (s)	4.0	4.0			4.0	4.0		4.0				
Lane Grp Cap (vph)	302	2160			2040	680		1119				
v/s Ratio Prot	c0.05	0.08			0.02			c0.16				
v/s Ratio Perm						c0.15						
v/c Ratio	0.27	0.13			0.05	0.39		0.53				
Uniform Delay, d1	32.0	7.8			17.8	20.5		25.5				
Progression Factor	1.20	0.99			1.00	1.00		1.16				
Incremental Delay, d2	2.2	0.1			0.0	1.7		1.8				
Delay (s)	40.7	7.9			17.8	22.2		31.3				
Level of Service	D	A			B	C		C				
Approach Delay (s)		15.4			21.4			31.3			0.0	
Approach LOS		B			C			C			A	

Intersection Summary			
HCM Average Control Delay	23.9	HCM Level of Service	C
HCM Volume to Capacity ratio	0.42		
Actuated Cycle Length (s)	90.0	Sum of lost time (s)	12.0
Intersection Capacity Utilization	55.8%	ICU Level of Service	B
Analysis Period (min)	15		

c Critical Lane Group

Movement	EBL	EBT	EBR	WBL	WBT	WBR	NBL	NBT	NBR	SBL	SBT	SBR
Lane Configurations												
Ideal Flow (vphpl)	1600	1800	1800	1800	1800	1800	1700	1800	1800	1800	1800	1800
Total Lost time (s)	4.0	4.0			4.0	4.0	4.0	4.0	4.0			
Lane Util. Factor	*1.00	*1.00			*1.00	1.00	*1.00	*1.00	*1.00			
Frt	1.00	1.00			1.00	1.00	1.00	1.00	1.00			
Flt Protected	1.00	1.00			1.00	1.00	1.00	1.00	1.00			
Satd. Flow (prot)	3200	3600			7200	1800	1700	1800	1800			
Flt Permitted	1.00	1.00			1.00	1.00	1.00	1.00	1.00			
Satd. Flow (perm)	3200	3600			7200	1800	1700	1800	1800			
Volume (vph)	99	398	0	0	969	424	109	2	294	0	0	0
Peak-hour factor, PHF	0.96	0.96	0.96	0.96	0.96	0.96	0.96	0.96	0.96	0.96	0.96	0.96
Adj. Flow (vph)	103	415	0	0	1009	442	114	2	306	0	0	0
RTOR Reduction (vph)	0	0	0	0	0	0	0	104	114	0	0	0
Lane Group Flow (vph)	103	415	0	0	1009	442	114	44	46	0	0	0
Turn Type	Prot					Free	Split		Prot			
Protected Phases	7	4			8		2	2	2			
Permitted Phases						Free						
Actuated Green, G (s)	21.0	56.0			31.0	90.0	26.0	26.0	26.0			
Effective Green, g (s)	21.0	56.0			31.0	90.0	26.0	26.0	26.0			
Actuated g/C Ratio	0.23	0.62			0.34	1.00	0.29	0.29	0.29			
Clearance Time (s)	4.0	4.0			4.0		4.0	4.0	4.0			
Lane Grp Cap (vph)	747	2240			2480	1800	491	520	520			
v/s Ratio Prot	0.03	0.12			c0.14		0.07	0.02	0.03			
v/s Ratio Perm						c0.25						
v/c Ratio	0.14	0.19			0.41	0.25	0.23	0.08	0.09			
Uniform Delay, d1	27.3	7.3			22.5	0.0	24.4	23.3	23.4			
Progression Factor	1.00	1.00			1.00	1.00	1.00	1.00	1.00			
Incremental Delay, d2	0.4	0.2			0.5	0.3	1.1	0.3	0.3			
Delay (s)	27.7	7.4			23.0	0.3	25.5	23.6	23.7			
Level of Service	C	A			C	A	C	C	C			
Approach Delay (s)		11.5			16.1			24.2			0.0	
Approach LOS		B			B			C			A	

Intersection Summary			
HCM Average Control Delay	16.5	HCM Level of Service	B
HCM Volume to Capacity ratio	0.30		
Actuated Cycle Length (s)	90.0	Sum of lost time (s)	4.0
Intersection Capacity Utilization	49.1%	ICU Level of Service	A
Analysis Period (min)	15		

c Critical Lane Group

Movement	EBL	EBT	EBR	WBL	WBT	WBR	NBL	NBT	NBR	SBL	SBT	SBR
Lane Configurations												
Ideal Flow (vphpl)	1700	1800	1800	1700	1800	1800	1700	1800	1800	1700	1800	1800
Total Lost time (s)	4.0	4.0		4.0	4.0		4.0	4.0		4.0	4.0	
Lane Util. Factor	1.00	*1.00		1.00	*1.00		1.00	*1.00		1.00	*1.00	
Frt	1.00	1.00		1.00	1.00		1.00	1.00		1.00	1.00	
Flt Protected	1.00	1.00		1.00	1.00		1.00	1.00		1.00	1.00	
Satd. Flow (prot)	1700	3600		1700	3600		1700	3600		1700	3600	
Flt Permitted	1.00	1.00		1.00	1.00		1.00	1.00		1.00	1.00	
Satd. Flow (perm)	1700	3600		1700	3600		1700	3600		1700	3600	
Volume (vph)	80	131	96	61	311	12	65	219	64	10	61	74
Peak-hour factor, PHF	0.96	0.96	0.96	0.96	0.96	0.96	0.96	0.96	0.96	0.96	0.96	0.96
Adj. Flow (vph)	83	136	100	64	324	12	68	228	67	10	64	77
RTOR Reduction (vph)	0	68	0	0	4	0	0	40	0	0	55	0
Lane Group Flow (vph)	83	168	0	64	332	0	68	255	0	10	86	0
Turn Type	Prot			Prot			Perm			Perm		
Protected Phases	5	2		1	6			8			4	
Permitted Phases							8			4		
Actuated Green, G (s)	20.0	24.0		18.0	22.0		21.0	21.0		21.0	21.0	
Effective Green, g (s)	20.0	24.0		18.0	22.0		21.0	21.0		21.0	21.0	
Actuated g/C Ratio	0.27	0.32		0.24	0.29		0.28	0.28		0.28	0.28	
Clearance Time (s)	4.0	4.0		4.0	4.0		4.0	4.0		4.0	4.0	
Lane Grp Cap (vph)	453	1152		408	1056		476	1008		476	1008	
v/s Ratio Prot	c0.05	0.05		0.04	c0.09			c0.07			0.02	
v/s Ratio Perm							0.04			0.01		
v/c Ratio	0.18	0.15		0.16	0.31		0.14	0.25		0.02	0.08	
Uniform Delay, d1	21.2	18.2		22.5	20.6		20.2	20.9		19.6	19.9	
Progression Factor	1.00	1.00		1.00	1.00		1.00	1.00		1.00	1.00	
Incremental Delay, d2	0.9	0.3		0.8	0.8		0.6	0.6		0.1	0.2	
Delay (s)	22.1	18.5		23.3	21.4		20.9	21.5		19.6	20.1	
Level of Service	C	B		C	C		C	C		B	C	
Approach Delay (s)		19.4			21.7			21.4			20.0	
Approach LOS		B			C			C			C	

Intersection Summary			
HCM Average Control Delay	20.8	HCM Level of Service	C
HCM Volume to Capacity ratio	0.25		
Actuated Cycle Length (s)	75.0	Sum of lost time (s)	12.0
Intersection Capacity Utilization	39.6%	ICU Level of Service	A
Analysis Period (min)	15		

c Critical Lane Group

Movement	EBL	EBT	EBR	WBL	WBT	WBR	NBL	NBT	NBR	SBL	SBT	SBR
Lane Configurations												
Ideal Flow (vphpl)	1700	1800	1800	1700	1800	1800	1700	1800	1800	1700	1800	1800
Total Lost time (s)	4.0	4.0		4.0	4.0		4.0	4.0		4.0	4.0	
Lane Util. Factor	1.00	*1.00		1.00	*1.00		1.00	*1.00		1.00	*1.00	
Frt	1.00	1.00		1.00	1.00		1.00	1.00		1.00	1.00	
Flt Protected	1.00	1.00		1.00	1.00		1.00	1.00		1.00	1.00	
Satd. Flow (prot)	1700	5400		1700	5400		1700	3600		1700	3600	
Flt Permitted	1.00	1.00		1.00	1.00		1.00	1.00		1.00	1.00	
Satd. Flow (perm)	1700	5400		1700	5400		1700	3600		1700	3600	
Volume (vph)	100	513	33	84	1080	85	337	159	50	40	104	75
Peak-hour factor, PHF	0.92	0.92	0.92	0.92	0.92	0.92	0.92	0.92	0.92	0.92	0.92	0.92
Adj. Flow (vph)	109	558	36	91	1174	92	366	173	54	43	113	82
RTOR Reduction (vph)	0	9	0	0	11	0	0	36	0	0	72	0
Lane Group Flow (vph)	109	585	0	91	1255	0	366	191	0	43	123	0
Turn Type	Prot			Prot			pm+pt			pm+pt		
Protected Phases	7	4		3	8		5	2		1	6	
Permitted Phases							2			6		
Actuated Green, G (s)	13.0	31.0		11.0	29.0		37.0	26.0		18.0	11.0	
Effective Green, g (s)	13.0	31.0		11.0	29.0		37.0	26.0		18.0	11.0	
Actuated g/C Ratio	0.14	0.34		0.12	0.32		0.41	0.29		0.20	0.12	
Clearance Time (s)	4.0	4.0		4.0	4.0		4.0	4.0		4.0	4.0	
Lane Grp Cap (vph)	243	1840		205	1721		691	1029		336	435	
v/s Ratio Prot	c0.06	0.11		0.05	c0.23		c0.13	0.05		0.01	0.03	
v/s Ratio Perm							0.09			0.02		
v/c Ratio	0.45	0.32		0.44	0.73		0.53	0.19		0.13	0.28	
Uniform Delay, d1	35.7	22.2		37.2	27.5		20.6	24.5		30.0	36.4	
Progression Factor	1.00	1.00		1.00	1.00		1.00	1.00		1.00	1.00	
Incremental Delay, d2	5.9	0.5		6.8	2.8		2.9	0.4		0.8	1.6	
Delay (s)	41.6	22.6		44.0	30.3		23.4	24.9		30.8	38.0	
Level of Service	D	C		D	C		C	C		C	D	
Approach Delay (s)		25.6			31.2			24.0			36.7	
Approach LOS		C			C			C			D	

Intersection Summary			
HCM Average Control Delay	28.8	HCM Level of Service	C
HCM Volume to Capacity ratio	0.59		
Actuated Cycle Length (s)	91.0	Sum of lost time (s)	12.0
Intersection Capacity Utilization	70.0%	ICU Level of Service	C
Analysis Period (min)	15		

c Critical Lane Group

Movement	EBL	EBT	EBR	WBL	WBT	WBR	NBL	NBT	NBR	SBL	SBT	SBR
Lane Configurations												
Ideal Flow (vphpl)	1700	1800	1800	1700	1800	1800	1700	1800	1800	1700	1800	1800
Total Lost time (s)	4.0	4.0		4.0	4.0		4.0	4.0		4.0	4.0	
Lane Util. Factor	1.00	*1.00		1.00	*1.00		1.00	*1.00		1.00	*1.00	
Frt	1.00	1.00		1.00	1.00		1.00	1.00		1.00	1.00	
Flt Protected	1.00	1.00		1.00	1.00		1.00	1.00		0.95	1.00	
Satd. Flow (prot)	1700	3600		1700	3600		1700	3600		1615	3600	
Flt Permitted	1.00	1.00		1.00	1.00		1.00	1.00		1.00	1.00	
Satd. Flow (perm)	1700	3600		1700	3600		1700	3600		1700	3600	
Volume (vph)	49	358	23	28	527	175	56	194	22	58	98	67
Peak-hour factor, PHF	0.87	0.87	0.87	0.87	0.87	0.87	0.87	0.87	0.87	0.87	0.87	0.87
Adj. Flow (vph)	56	411	26	32	606	201	64	223	25	67	113	77
RTOR Reduction (vph)	0	6	0	0	48	0	0	12	0	0	50	0
Lane Group Flow (vph)	56	431	0	32	759	0	64	236	0	67	140	0
Turn Type	Perm			Perm			Perm			Perm		
Protected Phases		4			8			2			6	
Permitted Phases	4			8			2			6		
Actuated Green, G (s)	41.0	41.0		41.0	41.0		26.0	26.0		26.0	26.0	
Effective Green, g (s)	41.0	41.0		41.0	41.0		26.0	26.0		26.0	26.0	
Actuated g/C Ratio	0.55	0.55		0.55	0.55		0.35	0.35		0.35	0.35	
Clearance Time (s)	4.0	4.0		4.0	4.0		4.0	4.0		4.0	4.0	
Lane Grp Cap (vph)	929	1968		929	1968		589	1248		589	1248	
v/s Ratio Prot		0.12			c0.21			c0.07			0.04	
v/s Ratio Perm	0.03			0.02			0.04			0.04		
v/c Ratio	0.06	0.22		0.03	0.39		0.11	0.19		0.11	0.11	
Uniform Delay, d1	8.0	8.8		7.9	9.8		16.6	17.1		16.7	16.7	
Progression Factor	0.73	0.60		0.43	0.31		1.00	1.00		1.00	1.00	
Incremental Delay, d2	0.1	0.3		0.1	0.5		0.4	0.3		0.4	0.2	
Delay (s)	6.0	5.5		3.4	3.6		17.0	17.5		17.1	16.8	
Level of Service	A	A		A	A		B	B		B	B	
Approach Delay (s)		5.6			3.6			17.4			16.9	
Approach LOS		A			A			B			B	

Intersection Summary			
HCM Average Control Delay	8.1	HCM Level of Service	A
HCM Volume to Capacity ratio	0.31		
Actuated Cycle Length (s)	75.0	Sum of lost time (s)	8.0
Intersection Capacity Utilization	47.9%	ICU Level of Service	A
Analysis Period (min)	15		

c Critical Lane Group

Movement	EBL	EBT	EBR	WBL	WBT	WBR	NBL	NBT	NBR	SBL	SBT	SBR
Lane Configurations												
Sign Control		Stop			Stop			Free			Free	
Grade		0%			0%			0%			0%	
Volume (veh/h)	2	0	2	0	0	0	0	216	0	0	202	0
Peak Hour Factor	0.95	0.95	0.95	0.95	0.95	0.95	0.95	0.95	0.95	0.95	0.95	0.95
Hourly flow rate (vph)	2	0	2	0	0	0	0	227	0	0	213	0
Pedestrians												
Lane Width (ft)												
Walking Speed (ft/s)												
Percent Blockage												
Right turn flare (veh)												
Median type		None			None							
Median storage veh)												
Upstream signal (ft)											934	
pX, platoon unblocked												
vC, conflicting volume	326	440	106	336	440	114	213			227		
vC1, stage 1 conf vol												
vC2, stage 2 conf vol												
vCu, unblocked vol	326	440	106	336	440	114	213			227		
tC, single (s)	7.5	6.5	6.9	7.5	6.5	6.9	4.1			4.1		
tC, 2 stage (s)												
tF (s)	3.5	4.0	3.3	3.5	4.0	3.3	2.2			2.2		
p0 queue free %	100	100	100	100	100	100	100			100		
cM capacity (veh/h)	608	514	934	598	514	924	1370			1353		

Direction, Lane #	EB 1	WB 1	NB 1	NB 2	SB 1	SB 2
Volume Total	4	0	114	114	106	106
Volume Left	2	0	0	0	0	0
Volume Right	2	0	0	0	0	0
cSH	737	1700	1370	1700	1353	1700
Volume to Capacity	0.01	0.00	0.00	0.07	0.00	0.06
Queue Length 95th (ft)	0	0	0	0	0	0
Control Delay (s)	9.9	0.0	0.0	0.0	0.0	0.0
Lane LOS	A	A				
Approach Delay (s)	9.9	0.0	0.0		0.0	
Approach LOS	A	A				

Intersection Summary			
Average Delay	0.1		
Intersection Capacity Utilization	16.3%	ICU Level of Service	A
Analysis Period (min)	15		

Movement	EBL	EBT	EBR	WBL	WBT	WBR	NBL	NBT	NBR	SBL	SBT	SBR
Lane Configurations												
Ideal Flow (vphpl)	1700	1800	1800	1700	1800	1800	1700	1800	1800	1700	1800	1800
Total Lost time (s)	4.0	4.0		4.0	4.0		4.0	4.0		4.0	4.0	4.0
Lane Util. Factor	1.00	*1.00		1.00	*1.00		1.00	1.00		1.00	*1.00	1.00
Frt	1.00	1.00		1.00	1.00		1.00	1.00		1.00	1.00	1.00
Flt Protected	1.00	1.00		1.00	1.00		1.00	1.00		1.00	1.00	1.00
Satd. Flow (prot)	1700	3600		1700	5400		1700	1800		1700	1800	1800
Flt Permitted	1.00	1.00		1.00	1.00		1.00	1.00		1.00	1.00	1.00
Satd. Flow (perm)	1700	3600		1700	5400		1700	1800		1700	1800	1800
Volume (vph)	141	547	52	92	921	27	107	348	101	36	275	177
Peak-hour factor, PHF	0.89	0.89	0.89	0.89	0.89	0.89	0.89	0.89	0.89	0.89	0.89	0.89
Adj. Flow (vph)	158	615	58	103	1035	30	120	391	113	40	309	199
RTOR Reduction (vph)	0	10	0	0	5	0	0	14	0	0	0	130
Lane Group Flow (vph)	158	663	0	103	1060	0	120	490	0	40	309	69
Turn Type	Prot			Prot			pm+pt			pm+pt		Perm
Protected Phases	7	4		3	8		5	2		1	6	
Permitted Phases							2			6		6
Actuated Green, G (s)	10.0	20.0		7.0	17.0		32.0	26.0		32.0	26.0	26.0
Effective Green, g (s)	10.0	20.0		7.0	17.0		32.0	26.0		32.0	26.0	26.0
Actuated g/C Ratio	0.13	0.27		0.09	0.23		0.43	0.35		0.43	0.35	0.35
Clearance Time (s)	4.0	4.0		4.0	4.0		4.0	4.0		4.0	4.0	4.0
Lane Grp Cap (vph)	227	960		159	1224		816	624		816	624	624
v/s Ratio Prot	c0.09	c0.18		0.06	c0.20		c0.01	c0.27		0.00	0.17	
v/s Ratio Perm							0.06			0.02		0.04
v/c Ratio	0.70	0.69		0.65	0.87		0.15	0.79		0.05	0.50	0.11
Uniform Delay, d1	31.0	24.7		32.8	27.9		13.5	22.0		14.1	19.3	16.6
Progression Factor	1.00	1.00		1.00	1.00		1.05	0.75		0.51	0.72	1.20
Incremental Delay, d2	16.2	4.1		18.6	8.4		0.3	7.2		0.1	2.4	0.3
Delay (s)	47.3	28.8		51.4	36.3		14.5	23.7		7.3	16.3	20.3
Level of Service	D	C		D	D		B	C		A	B	C
Approach Delay (s)		32.3			37.6			21.9			17.1	
Approach LOS		C			D			C			B	

Intersection Summary			
HCM Average Control Delay	29.6	HCM Level of Service	C
HCM Volume to Capacity ratio	0.77		
Actuated Cycle Length (s)	75.0	Sum of lost time (s)	20.0
Intersection Capacity Utilization	70.6%	ICU Level of Service	C
Analysis Period (min)	15		

c Critical Lane Group

Movement	EBL	EBT	EBR	WBL	WBT	WBR	NBL	NBT	NBR	SBL	SBT	SBR
Lane Configurations												
Ideal Flow (vphpl)	1700	1800	1800	1700	1800	1800	1700	1800	1800	1700	1800	1800
Total Lost time (s)	4.0	4.0		4.0	4.0		4.0	4.0		4.0	4.0	
Lane Util. Factor	1.00	*1.00		1.00	*1.00		1.00	*1.00		1.00	*1.00	
Frt	1.00	1.00		1.00	1.00		1.00	1.00		1.00	1.00	
Flt Protected	1.00	1.00		1.00	1.00		1.00	1.00		1.00	1.00	
Satd. Flow (prot)	1700	3600		1700	3600		1700	1800		1700	1800	
Flt Permitted	1.00	1.00		1.00	1.00		1.00	1.00		1.00	1.00	
Satd. Flow (perm)	1700	3600		1700	3600		1700	1800		1700	1800	
Volume (vph)	21	331	88	87	531	26	106	570	69	31	370	47
Peak-hour factor, PHF	0.96	0.96	0.96	0.96	0.96	0.96	0.96	0.96	0.96	0.96	0.96	0.96
Adj. Flow (vph)	22	345	92	91	553	27	110	594	72	32	385	49
RTOR Reduction (vph)	0	35	0	0	5	0	0	6	0	0	6	0
Lane Group Flow (vph)	22	402	0	91	575	0	110	660	0	32	428	0
Turn Type	Perm			Perm			pm+pt			pm+pt		
Protected Phases		4			8		5	2		1	6	
Permitted Phases	4			8			2			6		
Actuated Green, G (s)	17.0	17.0		17.0	17.0		46.0	40.0		46.0	40.0	
Effective Green, g (s)	17.0	17.0		17.0	17.0		46.0	40.0		46.0	40.0	
Actuated g/C Ratio	0.23	0.23		0.23	0.23		0.61	0.53		0.61	0.53	
Clearance Time (s)	4.0	4.0		4.0	4.0		4.0	4.0		4.0	4.0	
Lane Grp Cap (vph)	385	816		385	816		1133	960		1133	960	
v/s Ratio Prot		0.11			c0.16		c0.01	c0.37		0.00	0.24	
v/s Ratio Perm	0.01			0.05			0.06			0.02		
v/c Ratio	0.06	0.49		0.24	0.71		0.10	0.69		0.03	0.45	
Uniform Delay, d1	22.7	25.2		23.7	26.7		6.4	12.9		7.6	10.7	
Progression Factor	0.83	0.71		0.85	0.88		1.00	1.00		0.98	0.80	
Incremental Delay, d2	0.3	2.1		1.4	5.0		0.2	4.0		0.0	1.3	
Delay (s)	19.2	20.1		21.5	28.4		6.5	16.9		7.5	9.8	
Level of Service	B	C		C	C		A	B		A	A	
Approach Delay (s)		20.1			27.5			15.4			9.6	
Approach LOS		C			C			B			A	

Intersection Summary			
HCM Average Control Delay	18.6	HCM Level of Service	B
HCM Volume to Capacity ratio	0.64		
Actuated Cycle Length (s)	75.0	Sum of lost time (s)	12.0
Intersection Capacity Utilization	72.5%	ICU Level of Service	C
Analysis Period (min)	15		

c Critical Lane Group

Movement	EBL	EBT	EBR	WBL	WBT	WBR	NBL	NBT	NBR	SBL	SBT	SBR
Lane Configurations												
Ideal Flow (vphpl)	1700	1800	1800	1700	1800	1800	1700	1800	1800	1700	1800	1800
Total Lost time (s)	4.0	4.0		4.0	4.0		4.0	4.0		4.0	4.0	
Lane Util. Factor	1.00	*1.00		1.00	*1.00		1.00	*1.00		1.00	*1.00	
Frt	1.00	1.00		1.00	1.00		1.00	1.00		1.00	1.00	
Flt Protected	1.00	1.00		1.00	1.00		1.00	1.00		1.00	1.00	
Satd. Flow (prot)	1700	3600		1700	3600		1700	3600		1700	3600	
Flt Permitted	1.00	1.00		1.00	1.00		1.00	1.00		1.00	1.00	
Satd. Flow (perm)	1700	3600		1700	3600		1700	3600		1700	3600	
Volume (vph)	36	310	66	27	374	17	91	400	48	15	294	57
Peak-hour factor, PHF	0.79	0.79	0.79	0.79	0.79	0.79	0.79	0.79	0.79	0.79	0.79	0.79
Adj. Flow (vph)	46	392	84	34	473	22	115	506	61	19	372	72
RTOR Reduction (vph)	0	26	0	0	4	0	0	13	0	0	23	0
Lane Group Flow (vph)	46	450	0	34	491	0	115	554	0	19	421	0
Turn Type	Perm			Perm			Perm			Perm		
Protected Phases		4			8			2			6	
Permitted Phases	4			8			2			6		
Actuated Green, G (s)	33.0	33.0		33.0	33.0		34.0	34.0		34.0	34.0	
Effective Green, g (s)	33.0	33.0		33.0	33.0		34.0	34.0		34.0	34.0	
Actuated g/C Ratio	0.44	0.44		0.44	0.44		0.45	0.45		0.45	0.45	
Clearance Time (s)	4.0	4.0		4.0	4.0		4.0	4.0		4.0	4.0	
Lane Grp Cap (vph)	748	1584		748	1584		771	1632		771	1632	
v/s Ratio Prot		0.12			c0.14			c0.15			0.12	
v/s Ratio Perm	0.03			0.02			0.07			0.01		
v/c Ratio	0.06	0.28		0.05	0.31		0.15	0.34		0.02	0.26	
Uniform Delay, d1	12.1	13.4		12.0	13.6		12.0	13.2		11.3	12.7	
Progression Factor	0.51	0.47		1.00	1.00		1.00	1.00		1.00	1.00	
Incremental Delay, d2	0.1	0.4		0.1	0.5		0.4	0.6		0.1	0.4	
Delay (s)	6.3	6.8		12.1	14.1		12.4	13.8		11.4	13.1	
Level of Service	A	A		B	B		B	B		B	B	
Approach Delay (s)		6.7			14.0			13.6			13.0	
Approach LOS		A			B			B			B	

Intersection Summary			
HCM Average Control Delay	11.9	HCM Level of Service	B
HCM Volume to Capacity ratio	0.32		
Actuated Cycle Length (s)	75.0	Sum of lost time (s)	8.0
Intersection Capacity Utilization	44.8%	ICU Level of Service	A
Analysis Period (min)	15		

c Critical Lane Group

Movement	EBL	EBT	EBR	WBL	WBT	WBR	NBL	NBT	NBR	SBL	SBT	SBR
Lane Configurations												
Ideal Flow (vphpl)	1700	1800	1800	1700	1800	1800	1700	1800	1800	1700	1800	1800
Total Lost time (s)	4.0	4.0	4.0	4.0	4.0		4.0	4.0		4.0	4.0	4.0
Lane Util. Factor	1.00	*1.00	1.00	1.00	*1.00		1.00	*1.00		1.00	*1.00	1.00
Frt	1.00	1.00	1.00	1.00	1.00		1.00	1.00		1.00	1.00	1.00
Flt Protected	1.00	1.00	1.00	1.00	1.00		1.00	1.00		1.00	1.00	1.00
Satd. Flow (prot)	1700	3600	1800	1700	3600		1700	3600		1700	3600	1800
Flt Permitted	1.00	1.00	1.00	1.00	1.00		1.00	1.00		1.00	1.00	1.00
Satd. Flow (perm)	1700	3600	1800	1700	3600		1700	3600		1700	3600	1800
Volume (vph)	63	477	233	71	868	40	426	288	54	35	192	134
Peak-hour factor, PHF	0.83	0.83	0.83	0.83	0.83	0.83	0.83	0.83	0.83	0.83	0.83	0.83
Adj. Flow (vph)	76	575	281	86	1046	48	513	347	65	42	231	161
RTOR Reduction (vph)	0	0	195	0	5	0	0	22	0	0	0	127
Lane Group Flow (vph)	76	575	86	86	1089	0	513	390	0	42	231	34
Turn Type	Prot		Perm	Prot			pm+pt			pm+pt		Perm
Protected Phases	7	4		3	8		5	2		1	6	
Permitted Phases			4				2			6		6
Actuated Green, G (s)	6.0	23.0	23.0	9.0	26.0		31.0	21.0		22.0	16.0	16.0
Effective Green, g (s)	6.0	23.0	23.0	9.0	26.0		31.0	21.0		22.0	16.0	16.0
Actuated g/C Ratio	0.08	0.31	0.31	0.12	0.35		0.41	0.28		0.29	0.21	0.21
Clearance Time (s)	4.0	4.0	4.0	4.0	4.0		4.0	4.0		4.0	4.0	4.0
Lane Grp Cap (vph)	136	1104	552	204	1248		703	1008		499	768	384
v/s Ratio Prot	c0.04	0.16		0.05	c0.30		c0.11	0.11		0.01	0.06	
v/s Ratio Perm			0.05				0.19			0.02		0.02
v/c Ratio	0.56	0.52	0.16	0.42	0.87		0.73	0.39		0.08	0.30	0.09
Uniform Delay, d1	33.2	21.5	18.9	30.6	23.0		19.7	21.8		19.2	24.8	23.7
Progression Factor	1.00	1.00	1.00	0.67	0.88		1.00	1.00		1.00	1.00	1.00
Incremental Delay, d2	15.5	1.8	0.6	5.4	7.5		6.6	1.1		0.3	1.0	0.5
Delay (s)	48.8	23.2	19.5	25.8	27.6		26.2	22.9		19.5	25.8	24.1
Level of Service	D	C	B	C	C		C	C		B	C	C
Approach Delay (s)		24.2			27.5			24.8			24.6	
Approach LOS		C			C			C			C	

Intersection Summary			
HCM Average Control Delay	25.5	HCM Level of Service	C
HCM Volume to Capacity ratio	0.77		
Actuated Cycle Length (s)	75.0	Sum of lost time (s)	12.0
Intersection Capacity Utilization	75.9%	ICU Level of Service	D
Analysis Period (min)	15		

c Critical Lane Group

Movement	EBL	EBT	WBT	WBR	SBL	SBR
Lane Configurations						
Sign Control		Free	Free		Stop	
Grade		0%	0%		0%	
Volume (veh/h)	43	381	587	39	26	84
Peak Hour Factor	0.90	0.90	0.90	0.90	0.90	0.90
Hourly flow rate (vph)	48	423	652	43	29	93
Pedestrians						
Lane Width (ft)						
Walking Speed (ft/s)						
Percent Blockage						
Right turn flare (veh)						
Median type					None	
Median storage veh)						
Upstream signal (ft)		675	693			
pX, platoon unblocked	0.89				0.89	0.89
vC, conflicting volume	696				981	348
vC1, stage 1 conf vol	0					
vC2, stage 2 conf vol	0					
vCu, unblocked vol	527				849	134
tC, single (s)	4.1				6.8	6.9
tC, 2 stage (s)	3.1					
tF (s)	2.2				3.5	3.3
p0 queue free %	95				89	88
cM capacity (veh/h)	873				254	794

Direction, Lane #	EB 1	EB 2	WB 1	WB 2	SB 1	SB 2
Volume Total	189	282	435	261	29	93
Volume Left	48	0	0	0	29	0
Volume Right	0	0	0	43	0	93
cSH	873	1700	1700	1700	254	794
Volume to Capacity	0.05	0.17	0.26	0.15	0.11	0.12
Queue Length 95th (ft)	4	0	0	0	9	10
Control Delay (s)	2.8	0.0	0.0	0.0	21.0	10.1
Lane LOS	A				C	B
Approach Delay (s)	1.1		0.0		12.7	
Approach LOS					B	

Intersection Summary			
Average Delay	1.6		
Intersection Capacity Utilization	44.2%	ICU Level of Service	A
Analysis Period (min)	15		

Movement	EBL	EBT	EBR	WBL	WBT	WBR	NBL	NBT	NBR	SBL	SBT	SBR
Lane Configurations												
Ideal Flow (vphpl)	1700	1800	1800	1700	1800	1800	1700	1800	1800	1700	1800	1800
Total Lost time (s)	4.0	4.0		4.0	4.0		4.0	4.0		4.0	4.0	
Lane Util. Factor	1.00	*1.00		1.00	*1.00		1.00	1.00		1.00	1.00	
Frt	1.00	1.00		1.00	1.00		1.00	1.00		1.00	1.00	
Flt Protected	1.00	1.00		1.00	1.00		1.00	1.00		1.00	1.00	
Satd. Flow (prot)	1700	3600		1700	3600		1700	1800		1700	1800	
Flt Permitted	1.00	1.00		1.00	1.00		1.00	1.00		1.00	1.00	
Satd. Flow (perm)	1700	3600		1700	3600		1700	1800		1700	1800	
Volume (vph)	31	486	47	53	834	65	101	380	48	31	327	49
Peak-hour factor, PHF	0.89	0.89	0.89	0.89	0.89	0.89	0.89	0.89	0.89	0.89	0.89	0.89
Adj. Flow (vph)	35	546	53	60	937	73	113	427	54	35	367	55
RTOR Reduction (vph)	0	10	0	0	8	0	0	6	0	0	7	0
Lane Group Flow (vph)	35	589	0	60	1002	0	113	475	0	35	415	0
Turn Type	Perm			Perm			Perm			Perm		
Protected Phases		4			8			2			6	
Permitted Phases	4			8			2			6		
Actuated Green, G (s)	33.0	33.0		33.0	33.0		34.0	34.0		34.0	34.0	
Effective Green, g (s)	33.0	33.0		33.0	33.0		34.0	34.0		34.0	34.0	
Actuated g/C Ratio	0.44	0.44		0.44	0.44		0.45	0.45		0.45	0.45	
Clearance Time (s)	4.0	4.0		4.0	4.0		4.0	4.0		4.0	4.0	
Lane Grp Cap (vph)	748	1584		748	1584		771	816		771	816	
v/s Ratio Prot		0.16			c0.28			c0.26			0.23	
v/s Ratio Perm	0.02			0.04			0.07			0.02		
v/c Ratio	0.05	0.37		0.08	0.63		0.15	0.58		0.05	0.51	
Uniform Delay, d1	12.0	14.1		12.2	16.3		12.0	15.2		11.4	14.6	
Progression Factor	1.88	2.01		1.00	1.00		0.85	0.71		1.00	1.00	
Incremental Delay, d2	0.1	0.6		0.2	1.9		0.3	2.5		0.1	2.3	
Delay (s)	22.7	28.8		12.4	18.2		10.5	13.4		11.6	16.8	
Level of Service	C	C		B	B		B	B		B	B	
Approach Delay (s)		28.5			17.9			12.8			16.4	
Approach LOS		C			B			B			B	

Intersection Summary			
HCM Average Control Delay	19.0	HCM Level of Service	B
HCM Volume to Capacity ratio	0.61		
Actuated Cycle Length (s)	75.0	Sum of lost time (s)	8.0
Intersection Capacity Utilization	70.7%	ICU Level of Service	C
Analysis Period (min)	15		

c Critical Lane Group

Movement	EBL	EBT	EBR	WBL	WBT	WBR	NBL	NBT	NBR	SBL	SBT	SBR
Lane Configurations												
Ideal Flow (vphpl)	1700	1800	1800	1700	1800	1800	1700	1800	1800	1700	1800	1800
Total Lost time (s)	4.0	4.0		4.0	4.0		4.0	4.0		4.0	4.0	
Lane Util. Factor	1.00	*1.00		1.00	*1.00		1.00	1.00		1.00	1.00	
Frt	1.00	1.00		1.00	1.00		1.00	1.00		1.00	1.00	
Flt Protected	1.00	1.00		1.00	1.00		1.00	1.00		1.00	1.00	
Satd. Flow (prot)	1700	3600		1700	3600		1700	1800		1700	1800	
Flt Permitted	1.00	1.00		1.00	1.00		1.00	1.00		1.00	1.00	
Satd. Flow (perm)	1700	3600		1700	3600		1700	1800		1700	1800	
Volume (vph)	9	82	52	53	185	14	63	509	26	12	393	39
Peak-hour factor, PHF	0.92	0.92	0.92	0.92	0.92	0.92	0.92	0.92	0.92	0.92	0.92	0.92
Adj. Flow (vph)	10	89	57	58	201	15	68	553	28	13	427	42
RTOR Reduction (vph)	0	45	0	0	8	0	0	2	0	0	5	0
Lane Group Flow (vph)	10	101	0	58	208	0	68	579	0	13	464	0
Turn Type	pm+pt			pm+pt			pm+pt			Perm		
Protected Phases	7	4		3	8		5	2			6	
Permitted Phases	4			8			2			6		
Actuated Green, G (s)	22.0	16.0		22.0	16.0		41.0	41.0		31.0	31.0	
Effective Green, g (s)	22.0	16.0		22.0	16.0		41.0	41.0		31.0	31.0	
Actuated g/C Ratio	0.29	0.21		0.29	0.21		0.55	0.55		0.41	0.41	
Clearance Time (s)	4.0	4.0		4.0	4.0		4.0	4.0		4.0	4.0	
Lane Grp Cap (vph)	589	768		589	768		929	984		703	744	
v/s Ratio Prot	0.00	0.03		c0.01	c0.06		0.01	c0.32			0.26	
v/s Ratio Perm	0.00			0.03			0.03			0.01		
v/c Ratio	0.02	0.13		0.10	0.27		0.07	0.59		0.02	0.62	
Uniform Delay, d1	18.8	23.9		19.4	24.6		9.7	11.4		13.0	17.4	
Progression Factor	1.00	1.00		1.00	1.00		1.00	0.83		0.93	0.74	
Incremental Delay, d2	0.1	0.4		0.3	0.9		0.1	1.9		0.0	3.6	
Delay (s)	18.9	24.2		19.7	25.5		9.8	11.3		12.1	16.4	
Level of Service	B	C		B	C		A	B		B	B	
Approach Delay (s)		23.9			24.3			11.1			16.3	
Approach LOS		C			C			B			B	

Intersection Summary			
HCM Average Control Delay	16.3	HCM Level of Service	B
HCM Volume to Capacity ratio	0.46		
Actuated Cycle Length (s)	75.0	Sum of lost time (s)	12.0
Intersection Capacity Utilization	55.8%	ICU Level of Service	B
Analysis Period (min)	15		

c Critical Lane Group

Movement	EBL	EBT	EBR	EBR2	WBL2	WBL	WBT	WBR	NBL2	NBL	NBT	NBR
Lane Configurations												
Ideal Flow (vphpl)	1700	1800	1800	1800	1600	1600	1800	1800	1700	1700	1800	1800
Total Lost time (s)	4.0	4.0	4.0			4.0	4.0			4.0	4.0	4.0
Lane Util. Factor	1.00	*1.00	*1.00			*1.00	*1.00			*1.00	*1.00	1.00
Frt	1.00	1.00	1.00			1.00	1.00			1.00	1.00	1.00
Flt Protected	1.00	1.00	1.00			1.00	1.00			1.00	1.00	1.00
Satd. Flow (prot)	1700	3600	1800			3200	3600			1700	3600	1800
Flt Permitted	1.00	1.00	1.00			1.00	1.00			1.00	1.00	1.00
Satd. Flow (perm)	1700	3600	1800			3200	3600			1700	3600	1800
Volume (vph)	107	332	81	6	81	257	458	29	39	159	523	108
Peak-hour factor, PHF	0.93	0.93	0.93	0.93	0.93	0.93	0.93	0.93	0.93	0.93	0.93	0.93
Adj. Flow (vph)	115	357	87	6	87	276	492	31	42	171	562	116
RTOR Reduction (vph)	0	0	2	0	0	0	5	0	0	0	0	81
Lane Group Flow (vph)	115	357	91	0	0	363	518	0	0	123	652	35
Turn Type	Prot		Perm		Prot	Prot			Prot	Prot		Perm
Protected Phases	5	2			1	1	6		3	3	8	
Permitted Phases			2									8
Actuated Green, G (s)	9.0	17.0	17.0			13.0	21.0			9.0	36.0	27.0
Effective Green, g (s)	9.0	17.0	17.0			13.0	21.0			9.0	36.0	27.0
Actuated g/C Ratio	0.10	0.19	0.19			0.14	0.23			0.10	0.40	0.30
Clearance Time (s)	4.0	4.0	4.0			4.0	4.0			4.0	4.0	4.0
Lane Grp Cap (vph)	170	680	340			462	840			170	1440	540
v/s Ratio Prot	0.07	0.10				c0.11	c0.14			c0.07	c0.05	
v/s Ratio Perm			0.05								0.14	0.02
v/c Ratio	0.68	0.53	0.27			0.79	0.62			0.72	0.45	0.06
Uniform Delay, d1	39.1	32.9	31.2			37.2	30.9			39.3	19.8	22.5
Progression Factor	1.00	1.00	1.00			1.00	1.00			1.00	1.00	1.00
Incremental Delay, d2	19.5	2.9	1.9			12.6	3.4			23.3	1.0	0.2
Delay (s)	58.6	35.8	33.1			49.8	34.3			62.6	20.8	22.7
Level of Service	E	D	C			D	C			E	C	C
Approach Delay (s)		40.0					40.6				26.8	
Approach LOS		D					D				C	

Intersection Summary			
HCM Average Control Delay	38.5	HCM Level of Service	D
HCM Volume to Capacity ratio	0.79		
Actuated Cycle Length (s)	90.0	Sum of lost time (s)	24.0
Intersection Capacity Utilization	85.7%	ICU Level of Service	E
Analysis Period (min)	15		

c Critical Lane Group

Movement	SBL	SBT	SBR	SBR2	NEL2	NEL	NER	NER2
Lane Configurations								
Ideal Flow (vphpl)	1700	1800	1800	1800	1600	1600	1800	1800
Total Lost time (s)	4.0	4.0	4.0			4.0	4.0	
Lane Util. Factor	1.00	*1.00	*1.00			*1.00	*1.00	
Frt	1.00	1.00	1.00			1.00	1.00	
Flt Protected	1.00	1.00	1.00			1.00	1.00	
Satd. Flow (prot)	1700	1800	1800			3200	3600	
Flt Permitted	1.00	1.00	1.00			1.00	1.00	
Satd. Flow (perm)	1700	1800	1800			3200	3600	
Volume (vph)	27	356	112	79	15	145	179	45
Peak-hour factor, PHF	0.93	0.93	0.93	0.93	0.93	0.93	0.93	0.93
Adj. Flow (vph)	29	383	120	85	16	156	192	48
RTOR Reduction (vph)	0	0	29	0	0	0	27	0
Lane Group Flow (vph)	29	383	176	0	0	172	213	0
Turn Type	Prot		Perm		Split		Perm	
Protected Phases	7	4			9	9		
Permitted Phases			4				9	
Actuated Green, G (s)	6.0	24.0	24.0			7.0	7.0	
Effective Green, g (s)	6.0	24.0	24.0			7.0	7.0	
Actuated g/C Ratio	0.07	0.27	0.27			0.08	0.08	
Clearance Time (s)	4.0	4.0	4.0			4.0	4.0	
Lane Grp Cap (vph)	113	480	480			249	280	
v/s Ratio Prot	0.02	c0.21				0.05		
v/s Ratio Perm			0.10				c0.06	
v/c Ratio	0.26	0.80	0.37			0.69	0.76	
Uniform Delay, d1	39.9	30.7	26.8			40.4	40.7	
Progression Factor	1.00	1.00	1.00			1.00	1.00	
Incremental Delay, d2	5.4	13.0	2.2			14.6	17.6	
Delay (s)	45.3	43.7	29.0			55.1	58.3	
Level of Service	D	D	C			E	E	
Approach Delay (s)		38.9				57.0		
Approach LOS		D				E		

Intersection Summary

OPENING YEAR (2014) WITH PROJECT CONDITIONS

AM PEAK HOUR

Movement	EBL	EBR	NBL	NBT	SBT	SBR
Lane Configurations						
Sign Control	Stop			Free	Free	
Grade	0%			0%	0%	
Volume (veh/h)	7	9	9	5	10	13
Peak Hour Factor	0.90	0.90	0.90	0.90	0.90	0.90
Hourly flow rate (vph)	8	10	10	6	11	14
Pedestrians						
Lane Width (ft)						
Walking Speed (ft/s)						
Percent Blockage						
Right turn flare (veh)						
Median type	None					
Median storage veh)						
Upstream signal (ft)						
pX, platoon unblocked						
vC, conflicting volume	44	18	26			
vC1, stage 1 conf vol						
vC2, stage 2 conf vol						
vCu, unblocked vol	44	18	26			
tC, single (s)	6.4	6.2	4.1			
tC, 2 stage (s)						
tF (s)	3.5	3.3	2.2			
p0 queue free %	99	99	99			
cM capacity (veh/h)	966	1066	1602			

Direction, Lane #	EB 1	NB 1	NB 2	SB 1
Volume Total	18	10	6	26
Volume Left	8	10	0	0
Volume Right	10	0	0	14
cSH	1020	1602	1700	1700
Volume to Capacity	0.02	0.01	0.00	0.02
Queue Length 95th (ft)	1	0	0	0
Control Delay (s)	8.6	7.3	0.0	0.0
Lane LOS	A	A		
Approach Delay (s)	8.6	4.7		0.0
Approach LOS	A			

Intersection Summary			
Average Delay	3.8		
Intersection Capacity Utilization	17.2%	ICU Level of Service	A
Analysis Period (min)	15		

Year 2014 Build AM Peak Hour
City of San Bernardino
Downtown San Bernardino Passenger Rail Project (With 3rd St Closure)

Level Of Service Computation Report
2000 HCM 4-Way Stop Method (Base Volume Alternative)

Intersection #2 K St and 2nd St

Cycle (sec):	100	Critical Vol./Cap.(X):	0.392
Loss Time (sec):	0 (Y+R=4.0 sec)	Average Delay (sec/veh):	11.3
Optimal Cycle:	0	Level Of Service:	B

Street Name:	K St						2nd St					
Approach:	North Bound			South Bound			East Bound			West Bound		
Movement:	L -	T -	R	L -	T -	R	L -	T -	R	L -	T -	R
Control:	Stop Sign			Stop Sign			Stop Sign			Stop Sign		
Rights:	Include			Include			Include			Include		
Min. Green:	0	0	0	0	0	0	0	0	0	0	0	0
Lanes:	0 0	1! 0	0	1 0	0 1	0	1 0	1 1	0	1 0	1 1	0
Volume Module:												
Base Vol:	17	1	106	17	5	11	5	423	14	114	229	16
Growth Adj:	1.00	1.00	1.00	1.00	1.00	1.00	1.00	1.00	1.00	1.00	1.00	1.00
Initial Bse:	17	1	106	17	5	11	5	423	14	114	229	16
User Adj:	1.00	1.00	1.00	1.00	1.00	1.00	1.00	1.00	1.00	1.00	1.00	1.00
PHF Adj:	0.94	0.94	0.94	0.94	0.94	0.94	0.94	0.94	0.94	0.94	0.94	0.94
PHF Volume:	18	1	113	18	5	12	5	450	15	121	244	17
Reduct Vol:	0	0	0	0	0	0	0	0	0	0	0	0
Reduced Vol:	18	1	113	18	5	12	5	450	15	121	244	17
PCE Adj:	1.00	1.00	1.00	1.00	1.00	1.00	1.00	1.00	1.00	1.00	1.00	1.00
MLF Adj:	1.00	1.00	1.00	1.00	1.00	1.00	1.00	1.00	1.00	1.00	1.00	1.00
FinalVolume:	18	1	113	18	5	12	5	450	15	121	244	17
Saturation Flow Module:												
Adjustment:	1.00	1.00	1.00	1.00	1.00	1.00	1.00	1.00	1.00	1.00	1.00	1.00
Lanes:	0.14	0.01	0.85	1.00	0.31	0.69	1.00	1.94	0.06	1.00	1.87	0.13
Final Sat.:	78	5	486	458	164	361	543	1148	38	528	1074	76
Capacity Analysis Module:												
Vol/Sat:	0.23	0.23	0.23	0.04	0.03	0.03	0.01	0.39	0.39	0.23	0.23	0.23
Crit Moves:			****	****				****		****		
Delay/Veh:	10.7	10.7	10.7	10.2	9.2	9.2	9.2	12.2	12.2	11.2	10.4	10.3
Delay Adj:	1.00	1.00	1.00	1.00	1.00	1.00	1.00	1.00	1.00	1.00	1.00	1.00
AdjDel/Veh:	10.7	10.7	10.7	10.2	9.2	9.2	9.2	12.2	12.2	11.2	10.4	10.3
LOS by Move:	B	B	B	B	A	A	A	B	B	B	B	B
ApproachDel:	10.7			9.7			12.2			10.7		
Delay Adj:	1.00			1.00			1.00			1.00		
ApprAdjDel:	10.7			9.7			12.2			10.7		
LOS by Appr:	B			A			B			B		
AllWayAvgQ:	0.3	0.3	0.3	0.0	0.0	0.0	0.0	0.6	0.6	0.3	0.3	0.3

Note: Queue reported is the number of cars per lane.

Movement	EBL	EBT	EBR	WBL	WBT	WBR	NBL	NBT	NBR	SBL	SBT	SBR
Lane Configurations												
Ideal Flow (vphpl)	1800	1800	1800	1800	1800	1800	1800	1800	1800	1800	1800	1800
Total Lost time (s)		4.0			4.0			4.0	4.0		4.0	4.0
Lane Util. Factor		*1.00			*1.00			1.00	1.00		1.00	1.00
Frt		1.00			1.00			1.00	1.00		1.00	1.00
Flt Protected		1.00			1.00			1.00	1.00		1.00	1.00
Satd. Flow (prot)		3600			3600			1800	1800		1800	1800
Flt Permitted		1.00			1.00			1.00	1.00		1.00	1.00
Satd. Flow (perm)		3600			3600			1800	1800		1800	1800
Volume (vph)	41	422	57	122	226	1	44	60	159	3	100	35
Peak-hour factor, PHF	0.86	0.86	0.86	0.86	0.86	0.86	0.86	0.86	0.86	0.86	0.86	0.86
Adj. Flow (vph)	48	491	66	142	263	1	51	70	185	3	116	41
RTOR Reduction (vph)	0	13	0	0	0	0	0	0	141	0	0	31
Lane Group Flow (vph)	0	592	0	0	406	0	0	121	44	0	119	10
Turn Type	Perm			Perm			Split		Perm	Split		Perm
Protected Phases		4			8		2	2		6	6	
Permitted Phases	4			8					2			6
Actuated Green, G (s)		27.0			27.0			18.0	18.0		18.0	18.0
Effective Green, g (s)		27.0			27.0			18.0	18.0		18.0	18.0
Actuated g/C Ratio		0.36			0.36			0.24	0.24		0.24	0.24
Clearance Time (s)		4.0			4.0			4.0	4.0		4.0	4.0
Lane Grp Cap (vph)		1296			1296			432	432		432	432
v/s Ratio Prot								c0.07			c0.07	
v/s Ratio Perm		0.16			0.11				0.02			0.01
v/c Ratio		0.46			0.31			0.28	0.10		0.28	0.02
Uniform Delay, d1		18.4			17.3			23.2	22.2		23.2	21.8
Progression Factor		1.00			0.89			1.00	1.00		1.00	1.00
Incremental Delay, d2		1.2			0.6			1.6	0.5		1.6	0.1
Delay (s)		19.5			16.0			24.8	22.7		24.8	21.9
Level of Service		B			B			C	C		C	C
Approach Delay (s)		19.5			16.0			23.5			24.0	
Approach LOS		B			B			C			C	

Intersection Summary			
HCM Average Control Delay	19.9	HCM Level of Service	B
HCM Volume to Capacity ratio	0.35		
Actuated Cycle Length (s)	75.0	Sum of lost time (s)	12.0
Intersection Capacity Utilization	48.4%	ICU Level of Service	A
Analysis Period (min)	15		

c Critical Lane Group

Movement	EBT	EBR	WBL	WBT	NBL	NBR
Lane Configurations						
Sign Control	Free			Free	Stop	
Grade	0%			0%	0%	
Volume (veh/h)	0	19	0	0	21	0
Peak Hour Factor	0.95	0.95	0.95	0.95	0.95	0.95
Hourly flow rate (vph)	0	20	0	0	22	0
Pedestrians						
Lane Width (ft)						
Walking Speed (ft/s)						
Percent Blockage						
Right turn flare (veh)						
Median type					None	
Median storage veh)						
Upstream signal (ft)				854		
pX, platoon unblocked						
vC, conflicting volume			20		10	10
vC1, stage 1 conf vol						
vC2, stage 2 conf vol						
vCu, unblocked vol			20		10	10
tC, single (s)			4.1		6.8	6.9
tC, 2 stage (s)						
tF (s)			2.2		3.5	3.3
p0 queue free %			100		98	100
cM capacity (veh/h)			1609		1014	1075

Direction, Lane #	EB 1	EB 2	WB 1	WB 2	NB 1
Volume Total	0	20	0	0	22
Volume Left	0	0	0	0	22
Volume Right	0	20	0	0	0
cSH	1700	1700	1700	1700	1014
Volume to Capacity	0.00	0.01	0.00	0.00	0.02
Queue Length 95th (ft)	0	0	0	0	2
Control Delay (s)	0.0	0.0	0.0	0.0	8.6
Lane LOS					A
Approach Delay (s)	0.0		0.0		8.6
Approach LOS					A

Intersection Summary			
Average Delay	4.5		
Intersection Capacity Utilization	13.3%	ICU Level of Service	A
Analysis Period (min)	15		

Year 2014 Build AM Peak Hour
City of San Bernardino
Downtown San Bernardino Passenger Rail Project (With 3rd St Closure)

Level Of Service Computation Report
2000 HCM Unsignalized Method (Base Volume Alternative)

Intersection #5 J St and 2nd St

Average Delay (sec/veh): 4.7 Worst Case Level Of Service: F[78.4]

Street Name:	J St						2nd St					
Approach:	North Bound			South Bound			East Bound			West Bound		
Movement:	L	T	R	L	T	R	L	T	R	L	T	R
Control:	Stop Sign			Stop Sign			Uncontrolled			Uncontrolled		
Rights:	Include			Include			Include			Include		
Lanes:	0 0 1!	0	0	0 1	0	0 0	1 0	1	1 0	1 0	1	1 0
Volume Module:												
Base Vol:	5	4	163	26	2	0	3	643	17	207	425	29
Growth Adj:	1.00	1.00	1.00	1.00	1.00	1.00	1.00	1.00	1.00	1.00	1.00	1.00
Initial Bse:	5	4	163	26	2	0	3	643	17	207	425	29
User Adj:	1.00	1.00	1.00	1.00	1.00	1.00	1.00	1.00	1.00	1.00	1.00	1.00
PHF Adj:	0.95	0.95	0.95	0.95	0.95	0.95	0.95	0.95	0.95	0.95	0.95	0.95
PHF Volume:	5	4	172	27	2	0	3	677	18	218	447	31
Reduct Vol:	0	0	0	0	0	0	0	0	0	0	0	0
FinalVolume:	5	4	172	27	2	0	3	677	18	218	447	31
Critical Gap Module:												
Critical Gp:	7.5	6.5	6.9	7.5	6.5	xxxxx	4.1	xxxx	xxxxx	4.1	xxxx	xxxxx
FollowUpTim:	3.5	4.0	3.3	3.5	4.0	xxxxx	2.2	xxxx	xxxxx	2.2	xxxx	xxxxx
Capacity Module:												
Cnflict Vol:	1353	1606	347	1245	1599	xxxxx	478	xxxx	xxxxx	695	xxxx	xxxxx
Potent Cap.:	110	106	655	133	107	xxxxx	1095	xxxx	xxxxx	910	xxxx	xxxxx
Move Cap.:	88	81	655	77	81	xxxxx	1095	xxxx	xxxxx	910	xxxx	xxxxx
Volume/Cap:	0.06	0.05	0.26	0.36	0.03	xxxx	0.00	xxxx	xxxx	0.24	xxxx	xxxx
Level Of Service Module:												
2Way95thQ:	xxxx	xxxx	xxxxx	xxxx	xxxx	xxxxx	0.0	xxxx	xxxxx	0.9	xxxx	xxxxx
Control Del:	xxxxx	xxxx	xxxxx	xxxxx	xxxx	xxxxx	8.3	xxxx	xxxxx	10.2	xxxx	xxxxx
LOS by Move:	*	*	*	*	*	*	A	*	*	B	*	*
Movement:	LT -	LTR -	RT	LT -	LTR -	RT	LT -	LTR -	RT	LT -	LTR -	RT
Shared Cap.:	xxxx	484	xxxxx	77	xxxx	xxxxx	xxxx	xxxx	xxxxx	xxxx	xxxx	xxxxx
SharedQueue:	xxxxx	1.7	xxxxx	1.5	xxxx	xxxxx	xxxxx	xxxx	xxxxx	xxxxx	xxxx	xxxxx
Shrd ConDel:	xxxxx	16.8	xxxxx	78.4	xxxx	xxxxx	xxxxx	xxxx	xxxxx	xxxxx	xxxx	xxxxx
Shared LOS:	*	C	*	F	*	*	*	*	*	*	*	*
ApproachDel:	16.8			78.4			xxxxxx			xxxxxx		
ApproachLOS:	C			F			*			*		

Note: Queue reported is the number of cars per lane.

Year 2014 Build AM Peak Hour
City of San Bernardino
Downtown San Bernardino Passenger Rail Project (With 3rd St Closure)

Level Of Service Computation Report
2000 HCM Unsignalized Method (Base Volume Alternative)

Intersection #6 J St and Rialto Ave

Average Delay (sec/veh): 90.4 Worst Case Level Of Service: F[522.8]

Street Name:	J St						Rialto Ave					
Approach:	North Bound			South Bound			East Bound			West Bound		
Movement:	L	T	R	L	T	R	L	T	R	L	T	R
Control:	Stop Sign			Stop Sign			Uncontrolled			Uncontrolled		
Rights:	Include			Include			Include			Include		
Lanes:	0 0 1! 0 0			0 0 1! 0 0			0 1 0 1 0			0 1 0 1 0		
Volume Module:												
Base Vol:	8	40	36	131	65	13	112	473	7	74	291	19
Growth Adj:	1.00	1.00	1.00	1.00	1.00	1.00	1.00	1.00	1.00	1.00	1.00	1.00
Initial Bse:	8	40	36	131	65	13	112	473	7	74	291	19
User Adj:	1.00	1.00	1.00	1.00	1.00	1.00	1.00	1.00	1.00	1.00	1.00	1.00
PHF Adj:	0.88	0.88	0.88	0.88	0.88	0.88	0.88	0.88	0.88	0.88	0.88	0.88
PHF Volume:	9	45	41	149	74	15	127	538	8	84	331	22
Reduct Vol:	0	0	0	0	0	0	0	0	0	0	0	0
FinalVolume:	9	45	41	149	74	15	127	538	8	84	331	22
Critical Gap Module:												
Critical Gp:	7.5	6.5	6.9	7.5	6.5	6.9	4.1	xxxx	xxxxx	4.1	xxxx	xxxxx
FollowUpTim:	3.5	4.0	3.3	3.5	4.0	3.3	2.2	xxxx	xxxxx	2.2	xxxx	xxxxx
Capacity Module:												
Cnflict Vol:	1166	1316	273	1056	1310	176	352	xxxx	xxxxx	545	xxxx	xxxxx
Potent Cap.:	151	159	731	182	161	843	1218	xxxx	xxxxx	1034	xxxx	xxxxx
Move Cap.:	71	129	731	108	130	843	1218	xxxx	xxxxx	1034	xxxx	xxxxx
Volume/Cap:	0.13	0.35	0.06	1.38	0.57	0.02	0.10	xxxx	xxxx	0.08	xxxx	xxxx
Level Of Service Module:												
2Way95thQ:	xxxx	xxxx	xxxxx	xxxx	xxxx	xxxxx	0.3	xxxx	xxxxx	0.3	xxxx	xxxxx
Control Del:	xxxxx	xxxx	xxxxx	xxxxx	xxxx	xxxxx	8.3	xxxx	xxxxx	8.8	xxxx	xxxxx
LOS by Move:	*	*	*	*	*	*	A	*	*	A	*	*
Movement:	LT	LTR	RT	LT	LTR	RT	LT	LTR	RT	LT	LTR	RT
Shared Cap.:	xxxx	178	xxxxx	xxxx	121	xxxxx	xxxx	xxxx	xxxxx	xxxx	xxxx	xxxxx
SharedQueue:	xxxxx	2.7	xxxxx	xxxxx	19.2	xxxxx	0.3	xxxx	xxxxx	0.3	xxxx	xxxxx
Shrd ConDel:	xxxxx	46.5	xxxxx	xxxxx	523	xxxxx	8.3	xxxx	xxxxx	8.8	xxxx	xxxxx
Shared LOS:	*	E	*	*	F	*	A	*	*	A	*	*
ApproachDel:	46.5			522.8			xxxxxx			xxxxxx		
ApproachLOS:	E			F			*			*		

Note: Queue reported is the number of cars per lane.

Movement	EBL	EBT	EBR	WBL	WBT	WBR	NBL	NBT	NBR	SBL	SBT	SBR
Lane Configurations												
Ideal Flow (vphpl)	1700	1800	1800	1700	1800	1800	1800	1800	1800	1800	1800	1800
Total Lost time (s)	4.0	4.0		4.0	4.0			4.0	4.0		4.0	4.0
Lane Util. Factor	1.00	*1.00		1.00	*1.00			*1.00	1.00		*1.00	1.00
Frt	1.00	1.00		1.00	1.00			1.00	1.00		1.00	1.00
Flt Protected	1.00	1.00		1.00	1.00			1.00	1.00		1.00	1.00
Satd. Flow (prot)	1700	3600		1700	3600			3600	1800		1800	1800
Flt Permitted	1.00	1.00		1.00	1.00			1.00	1.00		1.00	1.00
Satd. Flow (perm)	1700	3600		1700	3600			3600	1800		1800	1800
Volume (vph)	52	752	10	85	694	6	3	2	9	16	5	12
Peak-hour factor, PHF	0.94	0.94	0.94	0.94	0.94	0.94	0.94	0.94	0.94	0.94	0.94	0.94
Adj. Flow (vph)	55	800	11	90	738	6	3	2	10	17	5	13
RTOR Reduction (vph)	0	1	0	0	1	0	0	0	7	0	0	9
Lane Group Flow (vph)	55	810	0	90	743	0	0	5	3	0	22	4
Turn Type	Perm			Perm			Perm		Perm	Perm		Perm
Protected Phases		4			8			2			6	
Permitted Phases	4			8			2		2	6		6
Actuated Green, G (s)	43.0	43.0		43.0	43.0			24.0	24.0		24.0	24.0
Effective Green, g (s)	43.0	43.0		43.0	43.0			24.0	24.0		24.0	24.0
Actuated g/C Ratio	0.57	0.57		0.57	0.57			0.32	0.32		0.32	0.32
Clearance Time (s)	4.0	4.0		4.0	4.0			4.0	4.0		4.0	4.0
Lane Grp Cap (vph)	975	2064		975	2064			1152	576		576	576
v/s Ratio Prot		c0.22			0.21							
v/s Ratio Perm	0.03			0.05				0.00	0.00		0.01	0.00
v/c Ratio	0.06	0.39		0.09	0.36			0.00	0.01		0.04	0.01
Uniform Delay, d1	7.1	8.8		7.2	8.6			17.4	17.4		17.6	17.4
Progression Factor	1.00	1.00		0.98	0.93			1.10	1.19		1.00	1.00
Incremental Delay, d2	0.1	0.6		0.2	0.5			0.0	0.0		0.1	0.0
Delay (s)	7.2	9.4		7.3	8.5			19.2	20.6		17.7	17.4
Level of Service	A	A		A	A			B	C		B	B
Approach Delay (s)		9.2			8.4			20.1			17.6	
Approach LOS		A			A			C			B	

Intersection Summary			
HCM Average Control Delay	9.1	HCM Level of Service	A
HCM Volume to Capacity ratio	0.27		
Actuated Cycle Length (s)	75.0	Sum of lost time (s)	8.0
Intersection Capacity Utilization	45.4%	ICU Level of Service	A
Analysis Period (min)	15		

c Critical Lane Group

Movement	EBL	EBT	WBT	WBR	SBL	SBR
Lane Configurations						
Sign Control		Free	Free		Stop	
Grade		0%	0%		0%	
Volume (veh/h)	0	661	272	17	0	125
Peak Hour Factor	0.95	0.95	0.95	0.95	0.95	0.95
Hourly flow rate (vph)	0	696	286	18	0	132
Pedestrians						
Lane Width (ft)						
Walking Speed (ft/s)						
Percent Blockage						
Right turn flare (veh)						
Median type					None	
Median storage veh)						
Upstream signal (ft)						
pX, platoon unblocked						
vC, conflicting volume	304				643	152
vC1, stage 1 conf vol						
vC2, stage 2 conf vol						
vCu, unblocked vol	304				643	152
tC, single (s)	4.1				6.8	6.9
tC, 2 stage (s)						
tF (s)	2.2				3.5	3.3
p0 queue free %	100				100	85
cM capacity (veh/h)	1268				411	873

Direction, Lane #	EB 1	EB 2	WB 1	WB 2	SB 1
Volume Total	348	348	191	113	132
Volume Left	0	0	0	0	0
Volume Right	0	0	0	18	132
cSH	1700	1700	1700	1700	873
Volume to Capacity	0.20	0.20	0.11	0.07	0.15
Queue Length 95th (ft)	0	0	0	0	13
Control Delay (s)	0.0	0.0	0.0	0.0	9.9
Lane LOS					A
Approach Delay (s)	0.0		0.0		9.9
Approach LOS					A

Intersection Summary			
Average Delay	1.1		
Intersection Capacity Utilization	23.3%	ICU Level of Service	A
Analysis Period (min)	15		

Movement	EBL	EBT	EBR	WBL	WBT	WBR	NBL	NBT	NBR	SBL	SBT	SBR
Lane Configurations												
Ideal Flow (vphpl)	1800	1800	1800	1700	1800	1800	1800	1800	1800	1800	1800	1700
Total Lost time (s)		4.0		4.0	4.0						4.0	
Lane Util. Factor		*1.00		1.00	*1.00						*1.00	
Frt		1.00		1.00	1.00						1.00	
Flt Protected		1.00		1.00	1.00						1.00	
Satd. Flow (prot)		3600		1700	3600						3600	
Flt Permitted		1.00		1.00	1.00						1.00	
Satd. Flow (perm)		3600		1700	3600						3600	
Volume (vph)	0	8	0	237	4	0	0	0	0	248	409	0
Peak-hour factor, PHF	0.96	0.96	0.96	0.96	0.96	0.96	0.96	0.96	0.96	0.96	0.96	0.96
Adj. Flow (vph)	0	8	0	247	4	0	0	0	0	258	426	0
RTOR Reduction (vph)	0	0	0	0	0	0	0	0	0	0	0	0
Lane Group Flow (vph)	0	8	0	247	4	0	0	0	0	0	684	0
Turn Type				Prot						Split		Perm
Protected Phases		4		3	8					6	6	
Permitted Phases												6
Actuated Green, G (s)		15.0		31.0	50.0						32.0	
Effective Green, g (s)		15.0		31.0	50.0						32.0	
Actuated g/C Ratio		0.17		0.34	0.56						0.36	
Clearance Time (s)		4.0		4.0	4.0						4.0	
Lane Grp Cap (vph)		600		586	2000						1280	
v/s Ratio Prot		c0.00		c0.15	0.00						c0.19	
v/s Ratio Perm												
v/c Ratio		0.01		0.42	0.00						0.53	
Uniform Delay, d1		31.3		22.6	8.9						23.1	
Progression Factor		1.00		2.55	0.34						1.00	
Incremental Delay, d2		0.0		2.2	0.0						1.6	
Delay (s)		31.4		59.9	3.0						24.7	
Level of Service		C		E	A						C	
Approach Delay (s)		31.4			59.0			0.0			24.7	
Approach LOS		C			E			A			C	

Intersection Summary			
HCM Average Control Delay	33.9	HCM Level of Service	C
HCM Volume to Capacity ratio	0.39		
Actuated Cycle Length (s)	90.0	Sum of lost time (s)	12.0
Intersection Capacity Utilization	45.2%	ICU Level of Service	A
Analysis Period (min)	15		

c Critical Lane Group

Movement	EBL	EBT	EBR	WBL	WBT	WBR	NBL	NBT	NBR	SBL	SBT	SBR
Lane Configurations												
Ideal Flow (vphpl)	1800	1800	1800	1600	1800	1800	1800	1800	1800	1700	1800	1800
Total Lost time (s)		4.0	4.0	4.0	4.0					4.0	4.0	4.0
Lane Util. Factor		*1.00	1.00	*1.00	*1.00					*1.00	*1.00	*1.00
Frt		1.00	1.00	1.00	1.00					1.00	1.00	1.00
Flt Protected		1.00	1.00	1.00	1.00					1.00	1.00	1.00
Satd. Flow (prot)		5400	1800	3200	3600					1700	1800	1800
Flt Permitted		1.00	1.00	1.00	1.00					1.00	1.00	1.00
Satd. Flow (perm)		5400	1800	3200	3600					1700	1800	1800
Volume (vph)	0	617	145	228	241	0	0	0	0	101	6	538
Peak-hour factor, PHF	0.95	0.95	0.95	0.95	0.95	0.95	0.95	0.95	0.95	0.95	0.95	0.95
Adj. Flow (vph)	0	649	153	240	254	0	0	0	0	106	6	566
RTOR Reduction (vph)	0	0	108	0	0	0	0	0	0	0	193	199
Lane Group Flow (vph)	0	649	45	240	254	0	0	0	0	106	92	88
Turn Type			Perm	Prot						Split		Perm
Protected Phases		4		3	8					6	6	
Permitted Phases			4									6
Actuated Green, G (s)		22.0	22.0	18.0	44.0					23.0	23.0	23.0
Effective Green, g (s)		22.0	22.0	18.0	44.0					23.0	23.0	23.0
Actuated g/C Ratio		0.29	0.29	0.24	0.59					0.31	0.31	0.31
Clearance Time (s)		4.0	4.0	4.0	4.0					4.0	4.0	4.0
Lane Grp Cap (vph)		1584	528	768	2112					521	552	552
v/s Ratio Prot		c0.12		c0.07	0.07					c0.06	0.05	
v/s Ratio Perm			0.02									0.05
v/c Ratio		0.41	0.08	0.31	0.12					0.20	0.17	0.16
Uniform Delay, d1		21.3	19.2	23.4	6.9					19.2	19.0	19.0
Progression Factor		0.62	1.22	1.00	1.00					1.00	1.00	1.00
Incremental Delay, d2		0.7	0.3	1.1	0.1					0.9	0.6	0.6
Delay (s)		13.9	23.8	24.5	7.0					20.1	19.6	19.6
Level of Service		B	C	C	A					C	B	B
Approach Delay (s)		15.8			15.5			0.0			19.7	
Approach LOS		B			B			A			B	

Intersection Summary			
HCM Average Control Delay	17.1	HCM Level of Service	B
HCM Volume to Capacity ratio	0.31		
Actuated Cycle Length (s)	75.0	Sum of lost time (s)	12.0
Intersection Capacity Utilization	69.5%	ICU Level of Service	C
Analysis Period (min)	15		

c Critical Lane Group

Movement	EBL	EBT	EBR	WBL	WBT	WBR	NBL	NBT	NBR	SBL	SBT	SBR
Lane Configurations												
Ideal Flow (vphpl)	1700	1800	1800	1800	1800	1800	1800	1800	1800	1800	1800	1800
Total Lost time (s)	4.0	4.0			4.0	4.0		4.0				
Lane Util. Factor	1.00	*1.00			*1.00	1.00		*1.00				
Frt	1.00	1.00			1.00	1.00		1.00				
Flt Protected	1.00	1.00			1.00	1.00		1.00				
Satd. Flow (prot)	1700	3600			5400	1800		3600				
Flt Permitted	1.00	1.00			1.00	1.00		1.00				
Satd. Flow (perm)	1700	3600			5400	1800		3600				
Volume (vph)	5	261	0	0	247	120	4	336	65	0	0	0
Peak-hour factor, PHF	0.96	0.96	0.96	0.96	0.96	0.96	0.96	0.96	0.96	0.96	0.96	0.96
Adj. Flow (vph)	5	272	0	0	257	125	4	350	68	0	0	0
RTOR Reduction (vph)	0	0	0	0	0	89	0	19	0	0	0	0
Lane Group Flow (vph)	5	272	0	0	257	36	0	403	0	0	0	0
Turn Type	Prot					Perm	Split					
Protected Phases	7	4			8		2	2				
Permitted Phases						8						
Actuated Green, G (s)	21.0	51.0			26.0	26.0		31.0				
Effective Green, g (s)	21.0	51.0			26.0	26.0		31.0				
Actuated g/C Ratio	0.23	0.57			0.29	0.29		0.34				
Clearance Time (s)	4.0	4.0			4.0	4.0		4.0				
Lane Grp Cap (vph)	397	2040			1560	520		1240				
v/s Ratio Prot	0.00	c0.08			c0.05			c0.11				
v/s Ratio Perm						0.02						
v/c Ratio	0.01	0.13			0.16	0.07		0.32				
Uniform Delay, d1	26.5	9.1			23.9	23.2		21.8				
Progression Factor	0.70	2.23			1.00	1.00		1.12				
Incremental Delay, d2	0.1	0.1			0.2	0.3		0.7				
Delay (s)	18.7	20.5			24.1	23.5		25.0				
Level of Service	B	C			C	C		C				
Approach Delay (s)		20.5			23.9			25.0			0.0	
Approach LOS		C			C			C			A	

Intersection Summary			
HCM Average Control Delay	23.4	HCM Level of Service	C
HCM Volume to Capacity ratio	0.22		
Actuated Cycle Length (s)	90.0	Sum of lost time (s)	12.0
Intersection Capacity Utilization	45.2%	ICU Level of Service	A
Analysis Period (min)	15		

c Critical Lane Group

Movement	EBL	EBT	EBR	WBL	WBT	WBR	NBL	NBT	NBR	SBL	SBT	SBR
Lane Configurations												
Ideal Flow (vphpl)	1600	1800	1800	1800	1800	1800	1700	1800	1800	1800	1800	1800
Total Lost time (s)	4.0	4.0			4.0	4.0	4.0	4.0	4.0			
Lane Util. Factor	*1.00	*1.00			*1.00	1.00	*1.00	*1.00	*1.00			
Frt	1.00	1.00			1.00	1.00	1.00	1.00	1.00			
Flt Protected	1.00	1.00			1.00	1.00	1.00	1.00	1.00			
Satd. Flow (prot)	3200	3600			7200	1800	1700	1800	1800			
Flt Permitted	1.00	1.00			1.00	1.00	1.00	1.00	1.00			
Satd. Flow (perm)	3200	3600			7200	1800	1700	1800	1800			
Volume (vph)	285	438	0	0	295	118	171	17	1148	0	0	0
Peak-hour factor, PHF	0.92	0.92	0.92	0.92	0.92	0.92	0.92	0.92	0.92	0.92	0.92	0.92
Adj. Flow (vph)	310	476	0	0	321	128	186	18	1248	0	0	0
RTOR Reduction (vph)	0	0	0	0	0	0	0	121	121	0	0	0
Lane Group Flow (vph)	310	476	0	0	321	128	186	513	513	0	0	0
Turn Type	Prot					Free	Split		Prot			
Protected Phases	7	4			8		2	2	2			
Permitted Phases						Free						
Actuated Green, G (s)	20.0	37.0			13.0	90.0	45.0	45.0	45.0			
Effective Green, g (s)	20.0	37.0			13.0	90.0	45.0	45.0	45.0			
Actuated g/C Ratio	0.22	0.41			0.14	1.00	0.50	0.50	0.50			
Clearance Time (s)	4.0	4.0			4.0		4.0	4.0	4.0			
Lane Grp Cap (vph)	711	1480			1040	1800	850	900	900			
v/s Ratio Prot	c0.10	c0.13			0.04		0.11	c0.28	0.28			
v/s Ratio Perm						0.07						
v/c Ratio	0.44	0.32			0.31	0.07	0.22	0.57	0.57			
Uniform Delay, d1	30.1	18.0			34.5	0.0	12.6	15.7	15.7			
Progression Factor	1.00	1.00			0.79	1.00	1.00	1.00	1.00			
Incremental Delay, d2	1.9	0.6			0.8	0.1	0.6	2.6	2.6			
Delay (s)	32.1	18.6			28.0	0.1	13.2	18.3	18.3			
Level of Service	C	B			C	A	B	B	B			
Approach Delay (s)		23.9			20.1			17.7			0.0	
Approach LOS		C			C			B			A	

Intersection Summary			
HCM Average Control Delay	19.9	HCM Level of Service	B
HCM Volume to Capacity ratio	0.48		
Actuated Cycle Length (s)	90.0	Sum of lost time (s)	8.0
Intersection Capacity Utilization	69.5%	ICU Level of Service	C
Analysis Period (min)	15		

c Critical Lane Group

Movement	EBL	EBT	EBR	WBL	WBT	WBR	NBL	NBT	NBR	SBL	SBT	SBR
Lane Configurations												
Ideal Flow (vphpl)	1700	1800	1800	1700	1800	1800	1700	1800	1800	1700	1800	1800
Total Lost time (s)	4.0	4.0		4.0	4.0			4.0		4.0	4.0	
Lane Util. Factor	1.00	*1.00		1.00	*1.00			*1.00		1.00	*1.00	
Frt	1.00	1.00		1.00	1.00			1.00		1.00	1.00	
Flt Protected	1.00	1.00		1.00	1.00			1.00		1.00	1.00	
Satd. Flow (prot)	1700	3600		1700	3600			3600		1700	3600	
Flt Permitted	1.00	1.00		1.00	1.00			1.00		1.00	1.00	
Satd. Flow (perm)	1700	3600		1700	3600			3600		1700	3600	
Volume (vph)	33	192	94	41	208	7	0	98	110	14	200	120
Peak-hour factor, PHF	0.81	0.81	0.81	0.81	0.81	0.81	0.81	0.81	0.81	0.81	0.81	0.81
Adj. Flow (vph)	41	237	116	51	257	9	0	121	136	17	247	148
RTOR Reduction (vph)	0	82	0	0	4	0	0	92	0	0	101	0
Lane Group Flow (vph)	41	271	0	51	262	0	0	165	0	17	294	0
Turn Type	Prot			Prot			Perm			Perm		
Protected Phases	5	2		1	6			8			4	
Permitted Phases							8			4		
Actuated Green, G (s)	17.0	22.0		17.0	22.0			24.0		24.0	24.0	
Effective Green, g (s)	17.0	22.0		17.0	22.0			24.0		24.0	24.0	
Actuated g/C Ratio	0.23	0.29		0.23	0.29			0.32		0.32	0.32	
Clearance Time (s)	4.0	4.0		4.0	4.0			4.0		4.0	4.0	
Lane Grp Cap (vph)	385	1056		385	1056			1152		544	1152	
v/s Ratio Prot	0.02	c0.08		c0.03	0.07			0.05			c0.08	
v/s Ratio Perm										0.01		
v/c Ratio	0.11	0.26		0.13	0.25			0.14		0.03	0.26	
Uniform Delay, d1	23.0	20.3		23.1	20.2			18.2		17.5	18.9	
Progression Factor	1.00	1.00		1.00	1.00			1.00		1.00	1.00	
Incremental Delay, d2	0.6	0.6		0.7	0.6			0.3		0.1	0.5	
Delay (s)	23.5	20.8		23.8	20.8			18.4		17.6	19.4	
Level of Service	C	C		C	C			B		B	B	
Approach Delay (s)		21.1			21.3			18.4			19.3	
Approach LOS		C			C			B			B	

Intersection Summary			
HCM Average Control Delay	20.1	HCM Level of Service	C
HCM Volume to Capacity ratio	0.22		
Actuated Cycle Length (s)	75.0	Sum of lost time (s)	12.0
Intersection Capacity Utilization	35.1%	ICU Level of Service	A
Analysis Period (min)	15		

c Critical Lane Group

Movement	EBL	EBT	EBR	WBL	WBT	WBR	NBL	NBT	NBR	SBL	SBT	SBR
Lane Configurations												
Ideal Flow (vphpl)	1700	1800	1800	1700	1800	1800	1700	1800	1800	1700	1800	1800
Total Lost time (s)	4.0	4.0		4.0	4.0		4.0	4.0		4.0	4.0	
Lane Util. Factor	1.00	*1.00		1.00	*1.00		1.00	*1.00		1.00	*1.00	
Frt	1.00	1.00		1.00	1.00		1.00	1.00		1.00	1.00	
Flt Protected	1.00	1.00		1.00	1.00		1.00	1.00		1.00	1.00	
Satd. Flow (prot)	1700	5400		1700	5400		1700	3600		1700	3600	
Flt Permitted	1.00	1.00		1.00	1.00		1.00	1.00		1.00	1.00	
Satd. Flow (perm)	1700	5400		1700	5400		1700	3600		1700	3600	
Volume (vph)	120	1212	146	38	275	41	124	130	41	101	192	25
Peak-hour factor, PHF	0.94	0.94	0.94	0.94	0.94	0.94	0.94	0.94	0.94	0.94	0.94	0.94
Adj. Flow (vph)	128	1289	155	40	293	44	132	138	44	107	204	27
RTOR Reduction (vph)	0	19	0	0	26	0	0	37	0	0	12	0
Lane Group Flow (vph)	128	1425	0	40	311	0	132	145	0	107	219	0
Turn Type	Prot			Prot			pm+pt			pm+pt		
Protected Phases	7	4		3	8		5	2		1	6	
Permitted Phases							2			6		
Actuated Green, G (s)	18.0	36.0		11.0	29.0		29.0	15.0		25.0	13.0	
Effective Green, g (s)	18.0	36.0		11.0	29.0		29.0	15.0		25.0	13.0	
Actuated g/C Ratio	0.20	0.40		0.12	0.32		0.32	0.17		0.28	0.14	
Clearance Time (s)	4.0	4.0		4.0	4.0		4.0	4.0		4.0	4.0	
Lane Grp Cap (vph)	340	2160		208	1740		548	600		472	520	
v/s Ratio Prot	c0.08	c0.26		0.02	0.06		c0.04	0.04		0.03	c0.06	
v/s Ratio Perm							0.04			0.03		
v/c Ratio	0.38	0.66		0.19	0.18		0.24	0.24		0.23	0.42	
Uniform Delay, d1	31.1	22.0		35.5	21.9		22.5	32.6		25.0	35.1	
Progression Factor	0.91	0.86		1.00	1.00		1.00	1.00		1.00	1.00	
Incremental Delay, d2	2.7	1.4		2.0	0.2		1.0	1.0		1.1	2.5	
Delay (s)	30.9	20.2		37.6	22.2		23.5	33.5		26.2	37.6	
Level of Service	C	C		D	C		C	C		C	D	
Approach Delay (s)		21.1			23.8			29.3			34.0	
Approach LOS		C			C			C			C	

Intersection Summary			
HCM Average Control Delay	24.2	HCM Level of Service	C
HCM Volume to Capacity ratio	0.53		
Actuated Cycle Length (s)	90.0	Sum of lost time (s)	20.0
Intersection Capacity Utilization	58.9%	ICU Level of Service	B
Analysis Period (min)	15		

c Critical Lane Group

Movement	EBL	EBT	EBR	WBL	WBT	WBR	NBL	NBT	NBR	SBL	SBT	SBR
Lane Configurations												
Ideal Flow (vphpl)	1700	1800	1800	1700	1800	1800	1700	1800	1800	1700	1800	1800
Total Lost time (s)	4.0	4.0		4.0	4.0		4.0	4.0		4.0	4.0	
Lane Util. Factor	1.00	*1.00		1.00	*1.00		1.00	*1.00		1.00	*1.00	
Frt	1.00	1.00		1.00	1.00		1.00	1.00		1.00	1.00	
Flt Protected	1.00	1.00		1.00	1.00		1.00	1.00		1.00	1.00	
Satd. Flow (prot)	1700	3600		1700	3600		1700	3600		1700	3600	
Flt Permitted	1.00	1.00		1.00	1.00		1.00	1.00		1.00	1.00	
Satd. Flow (perm)	1700	3600		1700	3600		1700	3600		1700	3600	
Volume (vph)	48	492	49	40	251	113	18	53	27	157	95	49
Peak-hour factor, PHF	0.79	0.79	0.79	0.79	0.79	0.79	0.79	0.79	0.79	0.79	0.79	0.79
Adj. Flow (vph)	61	623	62	51	318	143	23	67	34	199	120	62
RTOR Reduction (vph)	0	11	0	0	72	0	0	20	0	0	37	0
Lane Group Flow (vph)	61	674	0	51	389	0	23	81	0	199	145	0
Turn Type	Perm			Perm			Perm			Perm		
Protected Phases		4			8			2			6	
Permitted Phases	4			8			2			6		
Actuated Green, G (s)	37.0	37.0		37.0	37.0		30.0	30.0		30.0	30.0	
Effective Green, g (s)	37.0	37.0		37.0	37.0		30.0	30.0		30.0	30.0	
Actuated g/C Ratio	0.49	0.49		0.49	0.49		0.40	0.40		0.40	0.40	
Clearance Time (s)	4.0	4.0		4.0	4.0		4.0	4.0		4.0	4.0	
Lane Grp Cap (vph)	839	1776		839	1776		680	1440		680	1440	
v/s Ratio Prot		c0.19			0.11			0.02			0.04	
v/s Ratio Perm	0.04			0.03			0.01			c0.12		
v/c Ratio	0.07	0.38		0.06	0.22		0.03	0.06		0.29	0.10	
Uniform Delay, d1	10.0	11.8		9.9	10.8		13.7	13.8		15.3	14.1	
Progression Factor	0.51	0.59		0.69	0.56		1.00	1.00		1.00	1.00	
Incremental Delay, d2	0.2	0.6		0.1	0.3		0.1	0.1		1.1	0.1	
Delay (s)	5.2	7.6		7.0	6.3		13.8	13.9		16.4	14.2	
Level of Service	A	A		A	A		B	B		B	B	
Approach Delay (s)		7.4			6.3			13.9			15.3	
Approach LOS		A			A			B			B	

Intersection Summary			
HCM Average Control Delay	9.3	HCM Level of Service	A
HCM Volume to Capacity ratio	0.34		
Actuated Cycle Length (s)	75.0	Sum of lost time (s)	8.0
Intersection Capacity Utilization	45.7%	ICU Level of Service	A
Analysis Period (min)	15		

c Critical Lane Group

Movement	EBL	EBT	EBR	WBL	WBT	WBR	NBL	NBT	NBR	SBL	SBT	SBR
Lane Configurations												
Sign Control		Stop			Stop			Free			Free	
Grade		0%			0%			0%			0%	
Volume (veh/h)	5	0	3	29	0	5	0	106	57	20	215	3
Peak Hour Factor	0.88	0.88	0.88	0.88	0.88	0.88	0.88	0.88	0.88	0.88	0.88	0.88
Hourly flow rate (vph)	6	0	3	33	0	6	0	120	65	23	244	3
Pedestrians												
Lane Width (ft)												
Walking Speed (ft/s)												
Percent Blockage												
Right turn flare (veh)												
Median type		None			None							
Median storage veh)												
Upstream signal (ft)											931	
pX, platoon unblocked												
vC, conflicting volume	357	477	124	324	446	93	248			185		
vC1, stage 1 conf vol												
vC2, stage 2 conf vol												
vCu, unblocked vol	357	477	124	324	446	93	248			185		
tC, single (s)	7.5	6.5	6.9	7.5	6.5	6.9	4.1			4.1		
tC, 2 stage (s)												
tF (s)	3.5	4.0	3.3	3.5	4.0	3.3	2.2			2.2		
p0 queue free %	99	100	100	95	100	99	100			98		
cM capacity (veh/h)	568	482	910	601	502	953	1330			1402		

Direction, Lane #	EB 1	WB 1	NB 1	NB 2	SB 1	SB 2
Volume Total	9	39	60	125	145	126
Volume Left	6	33	0	0	23	0
Volume Right	3	6	0	65	0	3
cSH	661	635	1330	1700	1402	1700
Volume to Capacity	0.01	0.06	0.00	0.07	0.02	0.07
Queue Length 95th (ft)	1	5	0	0	1	0
Control Delay (s)	10.5	11.0	0.0	0.0	1.3	0.0
Lane LOS	B	B			A	
Approach Delay (s)	10.5	11.0	0.0		0.7	
Approach LOS	B	B				

Intersection Summary			
Average Delay	1.4		
Intersection Capacity Utilization	25.3%	ICU Level of Service	A
Analysis Period (min)	15		

Year 2014 Build AM Peak Hour
City of San Bernardino
Downtown San Bernardino Passenger Rail Project (With 3rd St Closure)

Level Of Service Computation Report
2000 HCM Unsignalized Method (Base Volume Alternative)

Intersection #18 Parking Lot Entrance and Congress St

Average Delay (sec/veh): 7.6 Worst Case Level Of Service: A[9.7]

Street Name:	Parking Lot Entrance						Congress Street					
Approach:	North Bound			South Bound			East Bound			West Bound		
Movement:	L	T	R	L	T	R	L	T	R	L	T	R
Control:	Stop Sign			Stop Sign			Uncontrolled			Uncontrolled		
Rights:	Include			Include			Include			Include		
Lanes:	1 0 0 0 0			0 0 0 0 1			0 0 1! 0 0			0 0 0 0 0		
Volume Module:												
Base Vol:	20	0	0	0	0	13	57	0	20	0	0	0
Growth Adj:	1.00	1.00	1.00	1.00	1.00	1.00	1.00	1.00	1.00	1.00	1.00	1.00
Initial Bse:	20	0	0	0	0	13	57	0	20	0	0	0
User Adj:	1.00	1.00	1.00	1.00	1.00	1.00	1.00	1.00	1.00	1.00	1.00	1.00
PHF Adj:	0.95	0.95	0.95	0.95	0.95	0.95	0.95	0.95	0.95	0.95	0.95	0.95
PHF Volume:	21	0	0	0	0	14	60	0	21	0	0	0
Reduct Vol:	0	0	0	0	0	0	0	0	0	0	0	0
FinalVolume:	21	0	0	0	0	14	60	0	21	0	0	0
Critical Gap Module:												
Critical Gp:	7.1	xxxx	xxxxx	xxxxx	xxxx	6.2	4.1	xxxx	xxxxx	xxxxx	xxxx	xxxxx
FollowUpTim:	3.5	xxxx	xxxxx	xxxxx	xxxx	3.3	2.2	xxxx	xxxxx	xxxxx	xxxx	xxxxx
Capacity Module:												
Cnflict Vol:	131	xxxx	xxxxx	xxxx	xxxx	0	0	xxxx	xxxxx	xxxx	xxxx	xxxxx
Potent Cap.:	847	xxxx	xxxxx	xxxx	xxxx	900	900	xxxx	xxxxx	xxxx	xxxx	xxxxx
Move Cap.:	790	xxxx	xxxxx	xxxx	xxxx	900	900	xxxx	xxxxx	xxxx	xxxx	xxxxx
Volume/Cap:	0.03	xxxx	xxxx	xxxx	xxxx	0.02	0.07	xxxx	xxxx	xxxx	xxxx	xxxx
Level Of Service Module:												
2Way95thQ:	0.1	xxxx	xxxxx	xxxx	xxxx	0.0	0.2	xxxx	xxxxx	xxxx	xxxx	xxxxx
Control Del:	9.7	xxxx	xxxxx	xxxxx	xxxx	9.1	9.3	xxxx	xxxxx	xxxxx	xxxx	xxxxx
LOS by Move:	A	*	*	*	*	A	A	*	*	*	*	*
Movement:	LT	LTR	RT	LT	LTR	RT	LT	LTR	RT	LT	LTR	RT
Shared Cap.:	xxxx	xxxx	xxxxx	xxxx	xxxx	xxxxx	xxxx	xxxx	xxxxx	xxxx	xxxx	xxxxx
SharedQueue:	xxxxx	xxxx	xxxxx	xxxxx	xxxx	xxxxx	xxxxx	xxxx	xxxxx	xxxxx	xxxx	xxxxx
Shrd ConDel:	xxxxx	xxxx	xxxxx	xxxxx	xxxx	xxxxx	xxxxx	xxxx	xxxxx	xxxxx	xxxx	xxxxx
Shared LOS:	*	*	*	*	*	*	*	*	*	*	*	*
ApproachDel:	9.7			9.1			xxxxxx			xxxxxx		
ApproachLOS:	A			A			*			*		

Note: Queue reported is the number of cars per lane.

Movement	EBL	EBT	EBR	WBL	WBT	WBR	NBL	NBT	NBR	SBL	SBT	SBR
Lane Configurations												
Ideal Flow (vphpl)	1700	1800	1800	1700	1800	1800	1700	1800	1800	1700	1800	1800
Total Lost time (s)	4.0	4.0		4.0	4.0		4.0	4.0		4.0	4.0	4.0
Lane Util. Factor	1.00	*1.00		1.00	*1.00		1.00	1.00		1.00	*1.00	1.00
Frt	1.00	1.00		1.00	1.00		1.00	1.00		1.00	1.00	1.00
Flt Protected	1.00	1.00		1.00	1.00		1.00	1.00		1.00	1.00	1.00
Satd. Flow (prot)	1700	3600		1700	5400		1700	1800		1700	1800	1800
Flt Permitted	1.00	1.00		1.00	1.00		1.00	1.00		1.00	1.00	1.00
Satd. Flow (perm)	1700	3600		1700	5400		1700	1800		1700	1800	1800
Volume (vph)	215	890	55	43	381	17	43	196	67	39	392	83
Peak-hour factor, PHF	0.92	0.92	0.92	0.92	0.92	0.92	0.92	0.92	0.92	0.92	0.92	0.92
Adj. Flow (vph)	234	967	60	47	414	18	47	213	73	42	426	90
RTOR Reduction (vph)	0	7	0	0	7	0	0	16	0	0	0	64
Lane Group Flow (vph)	234	1020	0	47	425	0	47	270	0	42	426	26
Turn Type	Prot			Prot			pm+pt			pm+pt		Perm
Protected Phases	7	4		3	8		5	2		1	6	
Permitted Phases							2			6		6
Actuated Green, G (s)	14.0	25.0		6.0	17.0		28.0	22.0		28.0	22.0	22.0
Effective Green, g (s)	14.0	25.0		6.0	17.0		28.0	22.0		28.0	22.0	22.0
Actuated g/C Ratio	0.19	0.33		0.08	0.23		0.37	0.29		0.37	0.29	0.29
Clearance Time (s)	4.0	4.0		4.0	4.0		4.0	4.0		4.0	4.0	4.0
Lane Grp Cap (vph)	317	1200		136	1224		725	528		725	528	528
v/s Ratio Prot	c0.14	c0.28		0.03	0.08		c0.01	0.15		0.00	c0.24	
v/s Ratio Perm							0.02			0.02		0.01
v/c Ratio	0.74	0.85		0.35	0.35		0.06	0.51		0.06	0.81	0.05
Uniform Delay, d1	28.8	23.3		32.6	24.3		16.2	22.0		15.3	24.5	19.0
Progression Factor	1.00	1.00		1.00	1.00		0.97	0.80		0.36	0.69	0.87
Incremental Delay, d2	14.3	7.6		6.8	0.8		0.2	3.2		0.1	10.4	0.1
Delay (s)	43.0	30.9		39.5	25.1		15.9	20.8		5.7	27.3	16.7
Level of Service	D	C		D	C		B	C		A	C	B
Approach Delay (s)		33.2			26.5			20.1			24.0	
Approach LOS		C			C			C			C	

Intersection Summary			
HCM Average Control Delay	28.4	HCM Level of Service	C
HCM Volume to Capacity ratio	0.72		
Actuated Cycle Length (s)	75.0	Sum of lost time (s)	12.0
Intersection Capacity Utilization	69.6%	ICU Level of Service	C
Analysis Period (min)	15		

c Critical Lane Group

Movement	EBL	EBT	EBR	WBL	WBT	WBR	NBL	NBT	NBR	SBL	SBT	SBR
Lane Configurations												
Ideal Flow (vphpl)	1700	1800	1800	1700	1800	1800	1700	1800	1800	1700	1800	1800
Total Lost time (s)	4.0	4.0	4.0	4.0	4.0		4.0	4.0		4.0	4.0	
Lane Util. Factor	1.00	*1.00	1.00	1.00	*1.00		1.00	*1.00		1.00	*1.00	
Frt	1.00	1.00	1.00	1.00	1.00		1.00	1.00		1.00	1.00	
Flt Protected	1.00	1.00	1.00	1.00	1.00		1.00	1.00		1.00	1.00	
Satd. Flow (prot)	1700	1800	1800	1700	3600		1700	1800		1700	1800	
Flt Permitted	1.00	1.00	1.00	1.00	1.00		1.00	1.00		1.00	1.00	
Satd. Flow (perm)	1700	1800	1800	1700	3600		1700	1800		1700	1800	
Volume (vph)	74	430	97	64	237	23	60	203	62	37	276	25
Peak-hour factor, PHF	0.78	0.78	0.78	0.78	0.78	0.78	0.78	0.78	0.78	0.78	0.78	0.78
Adj. Flow (vph)	95	551	124	82	304	29	77	260	79	47	354	32
RTOR Reduction (vph)	0	0	71	0	10	0	0	15	0	0	5	0
Lane Group Flow (vph)	95	551	53	82	323	0	77	324	0	47	381	0
Turn Type	Perm		Perm	Perm			pm+pt			pm+pt		
Protected Phases		4			8		5	2		1	6	
Permitted Phases	4		4	8			2			6		
Actuated Green, G (s)	32.0	32.0	32.0	32.0	32.0		31.0	25.0		31.0	25.0	
Effective Green, g (s)	32.0	32.0	32.0	32.0	32.0		31.0	25.0		31.0	25.0	
Actuated g/C Ratio	0.43	0.43	0.43	0.43	0.43		0.41	0.33		0.41	0.33	
Clearance Time (s)	4.0	4.0	4.0	4.0	4.0		4.0	4.0		4.0	4.0	
Lane Grp Cap (vph)	725	768	768	725	1536		793	600		793	600	
v/s Ratio Prot		c0.31			0.09		c0.01	0.18		0.00	c0.21	
v/s Ratio Perm	0.06		0.03	0.05			0.04			0.02		
v/c Ratio	0.13	0.72	0.07	0.11	0.21		0.10	0.54		0.06	0.64	
Uniform Delay, d1	13.1	17.8	12.7	13.0	13.5		14.2	20.3		13.7	21.1	
Progression Factor	0.77	0.90	0.82	0.61	0.61		0.81	0.82		2.27	1.96	
Incremental Delay, d2	0.4	5.6	0.2	0.3	0.3		0.2	3.3		0.1	3.1	
Delay (s)	10.4	21.6	10.6	8.2	8.5		11.7	20.0		31.1	44.6	
Level of Service	B	C	B	A	A		B	B		C	D	
Approach Delay (s)		18.4			8.5			18.4			43.1	
Approach LOS		B			A			B			D	

Intersection Summary			
HCM Average Control Delay	21.7	HCM Level of Service	C
HCM Volume to Capacity ratio	0.63		
Actuated Cycle Length (s)	75.0	Sum of lost time (s)	12.0
Intersection Capacity Utilization	61.8%	ICU Level of Service	B
Analysis Period (min)	15		

c Critical Lane Group

Movement	EBL	EBR	NBL	NBT	SBT	SBR
Lane Configurations						
Sign Control	Stop			Free	Free	
Grade	0%			0%	0%	
Volume (veh/h)	13	10	43	313	336	54
Peak Hour Factor	0.95	0.95	0.95	0.95	0.95	0.95
Hourly flow rate (vph)	14	11	45	329	354	57
Pedestrians						
Lane Width (ft)						
Walking Speed (ft/s)						
Percent Blockage						
Right turn flare (veh)						
Median type	None					
Median storage veh)						
Upstream signal (ft)					848	
pX, platoon unblocked						
vC, conflicting volume	637	205	411			
vC1, stage 1 conf vol						
vC2, stage 2 conf vol						
vCu, unblocked vol	637	205	411			
tC, single (s)	6.8	6.9	4.1			
tC, 2 stage (s)						
tF (s)	3.5	3.3	2.2			
p0 queue free %	97	99	96			
cM capacity (veh/h)	398	808	1159			

Direction, Lane #	EB 1	NB 1	NB 2	SB 1	SB 2
Volume Total	24	155	220	236	175
Volume Left	14	45	0	0	0
Volume Right	11	0	0	0	57
cSH	510	1159	1700	1700	1700
Volume to Capacity	0.05	0.04	0.13	0.14	0.10
Queue Length 95th (ft)	4	3	0	0	0
Control Delay (s)	12.4	2.6	0.0	0.0	0.0
Lane LOS	B	A			
Approach Delay (s)	12.4	1.1		0.0	
Approach LOS	B				

Intersection Summary			
Average Delay	0.9		
Intersection Capacity Utilization	35.4%	ICU Level of Service	A
Analysis Period (min)	15		

Movement	EBL	EBT	EBR	WBL	WBT	WBR	NBL	NBT	NBR	SBL	SBT	SBR
Lane Configurations												
Ideal Flow (vphpl)	1700	1800	1800	1700	1800	1800	1700	1800	1800	1700	1800	1800
Total Lost time (s)	4.0	4.0		4.0	4.0		4.0	4.0		4.0	4.0	
Lane Util. Factor	1.00	*1.00		1.00	*1.00		1.00	*1.00		1.00	*1.00	
Frt	1.00	1.00		1.00	1.00		1.00	1.00		1.00	1.00	
Flt Protected	1.00	1.00		1.00	1.00		1.00	1.00		1.00	1.00	
Satd. Flow (prot)	1700	3600		1700	3600		1700	3600		1700	3600	
Flt Permitted	1.00	1.00		1.00	1.00		1.00	1.00		1.00	1.00	
Satd. Flow (perm)	1700	3600		1700	3600		1700	3600		1700	3600	
Volume (vph)	70	284	59	35	259	15	30	230	25	18	239	46
Peak-hour factor, PHF	0.85	0.85	0.85	0.85	0.85	0.85	0.85	0.85	0.85	0.85	0.85	0.85
Adj. Flow (vph)	82	334	69	41	305	18	35	271	29	21	281	54
RTOR Reduction (vph)	0	25	0	0	6	0	0	12	0	0	23	0
Lane Group Flow (vph)	82	378	0	41	317	0	35	288	0	21	312	0
Turn Type	Perm			Perm			Perm			Perm		
Protected Phases		4			8			2			6	
Permitted Phases	4			8			2			6		
Actuated Green, G (s)	34.0	34.0		34.0	34.0		33.0	33.0		33.0	33.0	
Effective Green, g (s)	34.0	34.0		34.0	34.0		33.0	33.0		33.0	33.0	
Actuated g/C Ratio	0.45	0.45		0.45	0.45		0.44	0.44		0.44	0.44	
Clearance Time (s)	4.0	4.0		4.0	4.0		4.0	4.0		4.0	4.0	
Lane Grp Cap (vph)	771	1632		771	1632		748	1584		748	1584	
v/s Ratio Prot		c0.10			0.09			0.08			c0.09	
v/s Ratio Perm	0.05			0.02			0.02			0.01		
v/c Ratio	0.11	0.23		0.05	0.19		0.05	0.18		0.03	0.20	
Uniform Delay, d1	11.8	12.5		11.5	12.3		12.0	12.8		11.9	12.9	
Progression Factor	0.55	0.58		1.00	1.00		1.00	1.00		1.00	1.00	
Incremental Delay, d2	0.2	0.2		0.1	0.3		0.1	0.3		0.1	0.3	
Delay (s)	6.7	7.5		11.6	12.6		12.1	13.0		12.0	13.2	
Level of Service	A	A		B	B		B	B		B	B	
Approach Delay (s)		7.3			12.4			12.9			13.1	
Approach LOS		A			B			B			B	

Intersection Summary			
HCM Average Control Delay	11.1	HCM Level of Service	B
HCM Volume to Capacity ratio	0.21		
Actuated Cycle Length (s)	75.0	Sum of lost time (s)	8.0
Intersection Capacity Utilization	38.8%	ICU Level of Service	A
Analysis Period (min)	15		

c Critical Lane Group

Movement	EBL	EBT	EBR	WBL	WBT	WBR	NBL	NBT	NBR	SBL	SBT	SBR
Lane Configurations												
Ideal Flow (vphpl)	1700	1800	1800	1700	1800	1800	1700	1800	1800	1700	1800	1800
Total Lost time (s)	4.0	4.0	4.0	4.0	4.0		4.0	4.0		4.0	4.0	4.0
Lane Util. Factor	1.00	*1.00	1.00	1.00	*1.00		1.00	*1.00		1.00	*1.00	1.00
Frt	1.00	1.00	1.00	1.00	1.00		1.00	1.00		1.00	1.00	1.00
Flt Protected	1.00	1.00	1.00	1.00	1.00		1.00	1.00		1.00	1.00	1.00
Satd. Flow (prot)	1700	3600	1800	1700	3600		1700	3600		1700	3600	1800
Flt Permitted	1.00	1.00	1.00	1.00	1.00		1.00	1.00		1.00	1.00	1.00
Satd. Flow (perm)	1700	3600	1800	1700	3600		1700	3600		1700	3600	1800
Volume (vph)	46	836	323	29	277	9	125	129	31	24	189	56
Peak-hour factor, PHF	0.91	0.91	0.91	0.91	0.91	0.91	0.91	0.91	0.91	0.91	0.91	0.91
Adj. Flow (vph)	51	919	355	32	304	10	137	142	34	26	208	62
RTOR Reduction (vph)	0	0	222	0	3	0	0	26	0	0	0	48
Lane Group Flow (vph)	51	919	133	32	311	0	137	150	0	26	208	14
Turn Type	Prot		Perm	Prot			pm+pt			pm+pt		Perm
Protected Phases	7	4		3	8		5	2		1	6	
Permitted Phases			4				2			6		6
Actuated Green, G (s)	7.0	28.0	28.0	7.0	28.0		24.0	17.0		24.0	17.0	17.0
Effective Green, g (s)	7.0	28.0	28.0	7.0	28.0		24.0	17.0		24.0	17.0	17.0
Actuated g/C Ratio	0.09	0.37	0.37	0.09	0.37		0.32	0.23		0.32	0.23	0.23
Clearance Time (s)	4.0	4.0	4.0	4.0	4.0		4.0	4.0		4.0	4.0	4.0
Lane Grp Cap (vph)	159	1344	672	159	1344		635	816		635	816	408
v/s Ratio Prot	c0.03	c0.26		0.02	0.09		c0.02	0.04		0.00	c0.06	
v/s Ratio Perm			0.07				0.06			0.01		0.01
v/c Ratio	0.32	0.68	0.20	0.20	0.23		0.22	0.18		0.04	0.25	0.03
Uniform Delay, d1	31.8	19.8	15.9	31.4	16.1		18.9	23.4		17.6	23.8	22.6
Progression Factor	1.00	1.00	1.00	0.75	1.10		1.00	1.00		1.00	1.00	1.00
Incremental Delay, d2	5.3	2.8	0.7	2.8	0.4		0.8	0.5		0.1	0.8	0.2
Delay (s)	37.0	22.6	16.6	26.4	18.2		19.6	23.9		17.7	24.6	22.8
Level of Service	D	C	B	C	B		B	C		B	C	C
Approach Delay (s)		21.5			18.9			22.0			23.6	
Approach LOS		C			B			C			C	

Intersection Summary			
HCM Average Control Delay	21.5	HCM Level of Service	C
HCM Volume to Capacity ratio	0.47		
Actuated Cycle Length (s)	75.0	Sum of lost time (s)	16.0
Intersection Capacity Utilization	54.3%	ICU Level of Service	A
Analysis Period (min)	15		

c Critical Lane Group

Movement	EBL	EBT	EBR	WBL	WBT	WBR	NBL	NBT	NBR	SBL	SBT	SBR
Lane Configurations												
Ideal Flow (vphpl)	1700	1800	1800	1700	1800	1800	1700	1800	1800	1700	1800	1800
Total Lost time (s)	4.0	4.0	4.0	4.0	4.0			4.0		4.0	4.0	
Lane Util. Factor	1.00	1.00	1.00	1.00	1.00			1.00		1.00	1.00	
Frt	1.00	1.00	1.00	1.00	1.00			1.00		1.00	1.00	
Flt Protected	1.00	1.00	1.00	1.00	1.00			1.00		1.00	1.00	
Satd. Flow (prot)	1700	1800	1800	1700	1800			1800		1700	1800	
Flt Permitted	1.00	1.00	1.00	1.00	1.00			1.00		1.00	1.00	
Satd. Flow (perm)	1700	1800	1800	1700	1800			1800		1700	1800	
Volume (vph)	38	372	54	29	240	34	47	0	71	23	0	28
Peak-hour factor, PHF	0.95	0.95	0.95	0.95	0.95	0.95	0.95	0.95	0.95	0.95	0.95	0.95
Adj. Flow (vph)	40	392	57	31	253	36	49	0	75	24	0	29
RTOR Reduction (vph)	0	0	27	0	7	0	0	47	0	0	18	0
Lane Group Flow (vph)	40	392	30	31	282	0	0	77	0	24	11	0
Turn Type	Perm		Perm	Perm			Perm			Perm		
Protected Phases		4			8			2			6	
Permitted Phases	4		4	8			2			6		
Actuated Green, G (s)	39.0	39.0	39.0	39.0	39.0			28.0		28.0	28.0	
Effective Green, g (s)	39.0	39.0	39.0	39.0	39.0			28.0		28.0	28.0	
Actuated g/C Ratio	0.52	0.52	0.52	0.52	0.52			0.37		0.37	0.37	
Clearance Time (s)	4.0	4.0	4.0	4.0	4.0			4.0		4.0	4.0	
Lane Grp Cap (vph)	884	936	936	884	936			672		635	672	
v/s Ratio Prot		c0.22			0.16						0.01	
v/s Ratio Perm	0.02		0.02	0.02				0.04		0.01		
v/c Ratio	0.05	0.42	0.03	0.04	0.30			0.11		0.04	0.02	
Uniform Delay, d1	8.8	11.0	8.8	8.8	10.2			15.4		14.9	14.8	
Progression Factor	0.68	0.60	0.52	1.45	1.54			1.00		1.00	1.00	
Incremental Delay, d2	0.1	1.3	0.1	0.1	0.8			0.3		0.1	0.0	
Delay (s)	6.1	8.0	4.6	12.8	16.6			15.7		15.0	14.9	
Level of Service	A	A	A	B	B			B		B	B	
Approach Delay (s)		7.4			16.2			15.7			14.9	
Approach LOS		A			B			B			B	

Intersection Summary			
HCM Average Control Delay	11.7	HCM Level of Service	B
HCM Volume to Capacity ratio	0.29		
Actuated Cycle Length (s)	75.0	Sum of lost time (s)	8.0
Intersection Capacity Utilization	48.0%	ICU Level of Service	A
Analysis Period (min)	15		

c Critical Lane Group

Movement	EBL	EBT	EBR	WBL	WBT	WBR	NBL	NBT	NBR	SBL	SBT	SBR
Lane Configurations												
Ideal Flow (vphpl)	1700	1800	1800	1700	1800	1800	1700	1800	1800	1700	1800	1800
Total Lost time (s)	4.0	4.0		4.0	4.0		4.0	4.0		4.0	4.0	
Lane Util. Factor	1.00	*1.00		1.00	*1.00		1.00	1.00		1.00	1.00	
Frt	1.00	1.00		1.00	1.00		1.00	1.00		1.00	1.00	
Flt Protected	1.00	1.00		1.00	1.00		1.00	1.00		1.00	1.00	
Satd. Flow (prot)	1700	3600		1700	3600		1700	1800		1700	1800	
Flt Permitted	1.00	1.00		1.00	1.00		1.00	1.00		1.00	1.00	
Satd. Flow (perm)	1700	3600		1700	3600		1700	1800		1700	1800	
Volume (vph)	37	709	85	68	301	19	47	174	74	53	283	24
Peak-hour factor, PHF	0.86	0.86	0.86	0.86	0.86	0.86	0.86	0.86	0.86	0.86	0.86	0.86
Adj. Flow (vph)	43	824	99	79	350	22	55	202	86	62	329	28
RTOR Reduction (vph)	0	13	0	0	6	0	0	21	0	0	4	0
Lane Group Flow (vph)	43	910	0	79	366	0	55	267	0	62	353	0
Turn Type	Perm			Perm			Perm			Perm		
Protected Phases		4			8			2			6	
Permitted Phases	4			8			2			6		
Actuated Green, G (s)	36.0	36.0		36.0	36.0		31.0	31.0		31.0	31.0	
Effective Green, g (s)	36.0	36.0		36.0	36.0		31.0	31.0		31.0	31.0	
Actuated g/C Ratio	0.48	0.48		0.48	0.48		0.41	0.41		0.41	0.41	
Clearance Time (s)	4.0	4.0		4.0	4.0		4.0	4.0		4.0	4.0	
Lane Grp Cap (vph)	816	1728		816	1728		703	744		703	744	
v/s Ratio Prot		c0.25			0.10			0.15			c0.20	
v/s Ratio Perm	0.03			0.05			0.03			0.04		
v/c Ratio	0.05	0.53		0.10	0.21		0.08	0.36		0.09	0.47	
Uniform Delay, d1	10.4	13.6		10.6	11.3		13.3	15.2		13.4	16.1	
Progression Factor	1.92	2.14		1.00	1.00		0.61	0.47		1.00	1.00	
Incremental Delay, d2	0.1	0.9		0.2	0.3		0.2	1.2		0.2	2.2	
Delay (s)	20.0	29.9		10.9	11.6		8.3	8.4		13.6	18.2	
Level of Service	C	C		B	B		A	A		B	B	
Approach Delay (s)		29.4			11.4			8.4			17.5	
Approach LOS		C			B			A			B	

Intersection Summary			
HCM Average Control Delay	20.1	HCM Level of Service	C
HCM Volume to Capacity ratio	0.50		
Actuated Cycle Length (s)	75.0	Sum of lost time (s)	8.0
Intersection Capacity Utilization	61.7%	ICU Level of Service	B
Analysis Period (min)	15		

c Critical Lane Group

Movement	EBL	EBT	EBR	WBL	WBT	WBR	NBL	NBT	NBR	SBL	SBT	SBR
Lane Configurations												
Ideal Flow (vphpl)	1700	1800	1800	1700	1800	1800	1700	1800	1800	1700	1800	1800
Total Lost time (s)	4.0	4.0		4.0	4.0		4.0	4.0		4.0	4.0	
Lane Util. Factor	1.00	*1.00		1.00	*1.00		1.00	1.00		1.00	1.00	
Frt	1.00	1.00		1.00	1.00		1.00	1.00		1.00	1.00	
Flt Protected	1.00	1.00		1.00	1.00		1.00	1.00		1.00	1.00	
Satd. Flow (prot)	1700	3600		1700	3600		1700	1800		1700	1800	
Flt Permitted	1.00	1.00		1.00	1.00		1.00	1.00		1.00	1.00	
Satd. Flow (perm)	1700	3600		1700	3600		1700	1800		1700	1800	
Volume (vph)	6	74	31	13	32	12	23	302	99	14	414	22
Peak-hour factor, PHF	0.87	0.87	0.87	0.87	0.87	0.87	0.87	0.87	0.87	0.87	0.87	0.87
Adj. Flow (vph)	7	85	36	15	37	14	26	347	114	16	476	25
RTOR Reduction (vph)	0	28	0	0	11	0	0	16	0	0	2	0
Lane Group Flow (vph)	7	93	0	15	40	0	26	445	0	16	499	0
Turn Type	pm+pt			pm+pt			pm+pt			Perm		
Protected Phases	7	4		3	8		5	2			6	
Permitted Phases	4			8			2			6		
Actuated Green, G (s)	22.0	16.0		22.0	16.0		41.0	41.0		31.0	31.0	
Effective Green, g (s)	22.0	16.0		22.0	16.0		41.0	41.0		31.0	31.0	
Actuated g/C Ratio	0.29	0.21		0.29	0.21		0.55	0.55		0.41	0.41	
Clearance Time (s)	4.0	4.0		4.0	4.0		4.0	4.0		4.0	4.0	
Lane Grp Cap (vph)	589	768		589	768		929	984		703	744	
v/s Ratio Prot	0.00	c0.03		c0.00	0.01		0.00	c0.25			c0.28	
v/s Ratio Perm	0.00			0.01			0.01			0.01		
v/c Ratio	0.01	0.12		0.03	0.05		0.03	0.45		0.02	0.67	
Uniform Delay, d1	18.8	23.8		18.9	23.5		9.8	10.2		13.0	17.9	
Progression Factor	1.00	1.00		1.00	1.00		1.79	1.70		0.86	0.73	
Incremental Delay, d2	0.0	0.3		0.1	0.1		0.0	1.2		0.1	4.4	
Delay (s)	18.8	24.1		19.0	23.6		17.5	18.7		11.3	17.5	
Level of Service	B	C		B	C		B	B		B	B	
Approach Delay (s)		23.9			22.5			18.6			17.3	
Approach LOS		C			C			B			B	

Intersection Summary			
HCM Average Control Delay	18.8	HCM Level of Service	B
HCM Volume to Capacity ratio	0.45		
Actuated Cycle Length (s)	75.0	Sum of lost time (s)	16.0
Intersection Capacity Utilization	38.5%	ICU Level of Service	A
Analysis Period (min)	15		

c Critical Lane Group

Movement	EBL	EBT	EBR	EBR2	WBL2	WBL	WBT	WBR	NBL2	NBL	NBT	NBR
Lane Configurations												
Ideal Flow (vphpl)	1700	1800	1800	1800	1600	1600	1800	1800	1700	1700	1800	1800
Total Lost time (s)	4.0	4.0	4.0			4.0	4.0			4.0	4.0	4.0
Lane Util. Factor	1.00	*1.00	*1.00			*1.00	*1.00			*1.00	*1.00	1.00
Frt	1.00	1.00	1.00			1.00	1.00			1.00	1.00	1.00
Flt Protected	1.00	1.00	1.00			1.00	1.00			1.00	1.00	1.00
Satd. Flow (prot)	1700	3600	1800			3200	3600			1700	3600	1800
Flt Permitted	1.00	1.00	1.00			1.00	1.00			1.00	1.00	1.00
Satd. Flow (perm)	1700	3600	1800			3200	3600			1700	3600	1800
Volume (vph)	75	376	69	2	55	128	286	63	23	50	192	54
Peak-hour factor, PHF	0.82	0.82	0.82	0.82	0.82	0.82	0.82	0.82	0.82	0.82	0.82	0.82
Adj. Flow (vph)	91	459	84	2	67	156	349	77	28	61	234	66
RTOR Reduction (vph)	0	0	1	0	0	0	27	0	0	0	0	52
Lane Group Flow (vph)	91	459	85	0	0	223	399	0	0	54	269	14
Turn Type	Prot		Perm		Prot	Prot			Prot	Prot		Perm
Protected Phases	5	2			1	1	6		3	3	8	
Permitted Phases			2									8
Actuated Green, G (s)	7.0	17.0	17.0			8.0	18.0			6.0	22.0	16.0
Effective Green, g (s)	7.0	17.0	17.0			8.0	18.0			6.0	22.0	16.0
Actuated g/C Ratio	0.09	0.23	0.23			0.11	0.24			0.08	0.29	0.21
Clearance Time (s)	4.0	4.0	4.0			4.0	4.0			4.0	4.0	4.0
Lane Grp Cap (vph)	159	816	408			341	864			136	1248	384
v/s Ratio Prot	0.05	c0.13				c0.07	0.11			c0.03	0.02	
v/s Ratio Perm			0.05								0.06	0.01
v/c Ratio	0.57	0.56	0.21			0.65	0.46			0.40	0.22	0.04
Uniform Delay, d1	32.6	25.7	23.5			32.2	24.4			32.8	20.0	23.4
Progression Factor	1.00	1.00	1.00			1.00	1.00			1.00	1.00	1.00
Incremental Delay, d2	14.1	2.8	1.2			9.4	1.8			8.5	0.4	0.2
Delay (s)	46.7	28.5	24.7			41.6	26.1			41.2	20.4	23.6
Level of Service	D	C	C			D	C			D	C	C
Approach Delay (s)		30.6					31.4				23.8	
Approach LOS		C					C				C	

Intersection Summary			
HCM Average Control Delay	31.5	HCM Level of Service	C
HCM Volume to Capacity ratio	0.58		
Actuated Cycle Length (s)	75.0	Sum of lost time (s)	20.0
Intersection Capacity Utilization	60.0%	ICU Level of Service	B
Analysis Period (min)	15		

c Critical Lane Group

Movement	SBL	SBT	SBR	SBR2	NEL2	NEL	NER	NER2
Lane Configurations								
Ideal Flow (vphpl)	1700	1800	1800	1800	1600	1600	1800	1800
Total Lost time (s)	4.0	4.0	4.0			4.0	4.0	
Lane Util. Factor	1.00	*1.00	*1.00			*1.00	*1.00	
Frt	1.00	1.00	1.00			1.00	1.00	
Flt Protected	1.00	1.00	1.00			1.00	1.00	
Satd. Flow (prot)	1700	1800	1800			3200	3600	
Flt Permitted	1.00	1.00	1.00			1.00	1.00	
Satd. Flow (perm)	1700	1800	1800			3200	3600	
Volume (vph)	37	188	37	46	4	108	182	38
Peak-hour factor, PHF	0.82	0.82	0.82	0.82	0.82	0.82	0.82	0.82
Adj. Flow (vph)	45	229	45	56	5	132	222	46
RTOR Reduction (vph)	0	0	44	0	0	0	25	0
Lane Group Flow (vph)	45	229	57	0	0	137	243	0
Turn Type	Prot		Perm		Split		Perm	
Protected Phases	7	4			9	9		
Permitted Phases			4				9	
Actuated Green, G (s)	6.0	16.0	16.0			8.0	8.0	
Effective Green, g (s)	6.0	16.0	16.0			8.0	8.0	
Actuated g/C Ratio	0.08	0.21	0.21			0.11	0.11	
Clearance Time (s)	4.0	4.0	4.0			4.0	4.0	
Lane Grp Cap (vph)	136	384	384			341	384	
v/s Ratio Prot	0.03	c0.13				0.04		
v/s Ratio Perm			0.03				c0.07	
v/c Ratio	0.33	0.60	0.15			0.40	0.63	
Uniform Delay, d1	32.6	26.6	24.0			31.3	32.1	
Progression Factor	1.26	1.02	1.26			1.00	1.00	
Incremental Delay, d2	5.9	6.2	0.7			3.5	7.7	
Delay (s)	46.9	33.2	31.0			34.8	39.8	
Level of Service	D	C	C			C	D	
Approach Delay (s)		34.3				38.1		
Approach LOS		C				D		

Intersection Summary

OPENING YEAR (2014) WITH PROJECT CONDITIONS

PM PEAK HOUR

Movement	EBL	EBR	NBL	NBT	SBT	SBR
Lane Configurations						
Sign Control	Stop			Free	Free	
Grade	0%			0%	0%	
Volume (veh/h)	10	81	6	5	10	21
Peak Hour Factor	0.94	0.94	0.94	0.94	0.94	0.94
Hourly flow rate (vph)	11	86	6	5	11	22
Pedestrians						
Lane Width (ft)						
Walking Speed (ft/s)						
Percent Blockage						
Right turn flare (veh)						
Median type	None					
Median storage veh)						
Upstream signal (ft)						
pX, platoon unblocked						
vC, conflicting volume	40	22	33			
vC1, stage 1 conf vol						
vC2, stage 2 conf vol						
vCu, unblocked vol	40	22	33			
tC, single (s)	6.4	6.2	4.1			
tC, 2 stage (s)						
tF (s)	3.5	3.3	2.2			
p0 queue free %	99	92	100			
cM capacity (veh/h)	973	1061	1592			

Direction, Lane #	EB 1	NB 1	NB 2	SB 1
Volume Total	97	6	5	33
Volume Left	11	6	0	0
Volume Right	86	0	0	22
cSH	1051	1592	1700	1700
Volume to Capacity	0.09	0.00	0.00	0.02
Queue Length 95th (ft)	8	0	0	0
Control Delay (s)	8.8	7.3	0.0	0.0
Lane LOS	A	A		
Approach Delay (s)	8.8	4.0		0.0
Approach LOS	A			

Intersection Summary			
Average Delay	6.3		
Intersection Capacity Utilization	18.1%	ICU Level of Service	A
Analysis Period (min)	15		

Year 2014 Build PM Peak Hour
City of San Bernardino
Downtown San Bernardino Passenger Rail Project (With 3rd St Closure)

Level Of Service Computation Report
2000 HCM 4-Way Stop Method (Base Volume Alternative)

Intersection #2 K St and 2nd St

Cycle (sec):	100	Critical Vol./Cap.(X):	0.564
Loss Time (sec):	0 (Y+R=4.0 sec)	Average Delay (sec/veh):	15.4
Optimal Cycle:	0	Level Of Service:	C

Street Name:	K St						2nd St					
Approach:	North Bound			South Bound			East Bound			West Bound		
Movement:	L -	T -	R	L -	T -	R	L -	T -	R	L -	T -	R
Control:	Stop Sign			Stop Sign			Stop Sign			Stop Sign		
Rights:	Include			Include			Include			Include		
Min. Green:	0	0	0	0	0	0	0	0	0	0	0	0
Lanes:	0 0	1! 0	0	1 0	0 1	0	1 0	1 1	0	1 0	1 1	0
Volume Module:												
Base Vol:	36	3	172	45	3	11	4	515	22	95	369	8
Growth Adj:	1.00	1.00	1.00	1.00	1.00	1.00	1.00	1.00	1.00	1.00	1.00	1.00
Initial Bse:	36	3	172	45	3	11	4	515	22	95	369	8
User Adj:	1.00	1.00	1.00	1.00	1.00	1.00	1.00	1.00	1.00	1.00	1.00	1.00
PHF Adj:	0.92	0.92	0.92	0.92	0.92	0.92	0.92	0.92	0.92	0.92	0.92	0.92
PHF Volume:	39	3	187	49	3	12	4	560	24	103	401	9
Reduct Vol:	0	0	0	0	0	0	0	0	0	0	0	0
Reduced Vol:	39	3	187	49	3	12	4	560	24	103	401	9
PCE Adj:	1.00	1.00	1.00	1.00	1.00	1.00	1.00	1.00	1.00	1.00	1.00	1.00
MLF Adj:	1.00	1.00	1.00	1.00	1.00	1.00	1.00	1.00	1.00	1.00	1.00	1.00
FinalVolume:	39	3	187	49	3	12	4	560	24	103	401	9
Saturation Flow Module:												
Adjustment:	1.00	1.00	1.00	1.00	1.00	1.00	1.00	1.00	1.00	1.00	1.00	1.00
Lanes:	0.17	0.01	0.82	1.00	0.21	0.79	1.00	1.92	0.08	1.00	1.96	0.04
Final Sat.:	89	7	424	405	98	360	476	993	43	466	982	21
Capacity Analysis Module:												
Vol/Sat:	0.44	0.44	0.44	0.12	0.03	0.03	0.01	0.56	0.56	0.22	0.41	0.41
Crit Moves:		****		****				****			****	
Delay/Veh:	14.5	14.5	14.5	11.9	10.1	10.1	10.1	17.6	17.5	12.2	14.2	14.1
Delay Adj:	1.00	1.00	1.00	1.00	1.00	1.00	1.00	1.00	1.00	1.00	1.00	1.00
AdjDel/Veh:	14.5	14.5	14.5	11.9	10.1	10.1	10.1	17.6	17.5	12.2	14.2	14.1
LOS by Move:	B	B	B	B	B	B	B	C	C	B	B	B
ApproachDel:		14.5			11.5			17.6			13.8	
Delay Adj:		1.00			1.00			1.00			1.00	
ApprAdjDel:		14.5			11.5			17.6			13.8	
LOS by Appr:		B			B			C			B	
AllWayAvgQ:	0.7	0.7	0.7	0.1	0.0	0.0	0.0	1.2	1.2	0.3	0.6	0.6

Note: Queue reported is the number of cars per lane.

Movement	EBL	EBT	EBR	WBL	WBT	WBR	NBL	NBT	NBR	SBL	SBT	SBR
Lane Configurations												
Ideal Flow (vphpl)	1800	1800	1800	1800	1800	1800	1800	1800	1800	1800	1800	1800
Total Lost time (s)		4.0			4.0			4.0	4.0		4.0	4.0
Lane Util. Factor		*1.00			*1.00			1.00	1.00		1.00	1.00
Frt		1.00			1.00			1.00	1.00		1.00	1.00
Flt Protected		1.00			1.00			1.00	1.00		1.00	1.00
Satd. Flow (prot)		3600			3600			1800	1800		1800	1800
Flt Permitted		1.00			1.00			1.00	1.00		1.00	1.00
Satd. Flow (perm)		3600			3600			1800	1800		1800	1800
Volume (vph)	75	286	46	115	600	14	38	114	169	5	95	38
Peak-hour factor, PHF	0.92	0.92	0.92	0.92	0.92	0.92	0.92	0.92	0.92	0.92	0.92	0.92
Adj. Flow (vph)	82	311	50	125	652	15	41	124	184	5	103	41
RTOR Reduction (vph)	0	14	0	0	2	0	0	0	140	0	0	32
Lane Group Flow (vph)	0	429	0	0	790	0	0	165	44	0	108	9
Turn Type	Perm			Perm			Split		Perm	Split		Perm
Protected Phases		4			8		2	2		6	6	
Permitted Phases	4			8					2			6
Actuated Green, G (s)		29.0			29.0			18.0	18.0		16.0	16.0
Effective Green, g (s)		29.0			29.0			18.0	18.0		16.0	16.0
Actuated g/C Ratio		0.39			0.39			0.24	0.24		0.21	0.21
Clearance Time (s)		4.0			4.0			4.0	4.0		4.0	4.0
Lane Grp Cap (vph)		1392			1392			432	432		384	384
v/s Ratio Prot								c0.09			c0.06	
v/s Ratio Perm		0.12			0.22				0.02			0.00
v/c Ratio		0.31			0.57			0.38	0.10		0.28	0.02
Uniform Delay, d1		16.0			18.1			23.8	22.2		24.7	23.3
Progression Factor		1.00			0.83			1.00	1.00		1.00	1.00
Incremental Delay, d2		0.6			1.7			2.6	0.5		1.8	0.1
Delay (s)		16.6			16.7			26.4	22.7		26.5	23.4
Level of Service		B			B			C	C		C	C
Approach Delay (s)		16.6			16.7			24.4			25.7	
Approach LOS		B			B			C			C	

Intersection Summary			
HCM Average Control Delay	19.0	HCM Level of Service	B
HCM Volume to Capacity ratio	0.44		
Actuated Cycle Length (s)	75.0	Sum of lost time (s)	12.0
Intersection Capacity Utilization	58.9%	ICU Level of Service	B
Analysis Period (min)	15		

c Critical Lane Group

Movement	EBT	EBR	WBL	WBT	NBL	NBR
Lane Configurations						
Sign Control	Free			Free	Stop	
Grade	0%			0%	0%	
Volume (veh/h)	0	20	0	0	24	0
Peak Hour Factor	0.95	0.95	0.95	0.95	0.95	0.95
Hourly flow rate (vph)	0	21	0	0	25	0
Pedestrians						
Lane Width (ft)						
Walking Speed (ft/s)						
Percent Blockage						
Right turn flare (veh)						
Median type					None	
Median storage veh)						
Upstream signal (ft)				854		
pX, platoon unblocked						
vC, conflicting volume			21		11	11
vC1, stage 1 conf vol						
vC2, stage 2 conf vol						
vCu, unblocked vol			21		11	11
tC, single (s)			4.1		6.8	6.9
tC, 2 stage (s)						
tF (s)			2.2		3.5	3.3
p0 queue free %			100		98	100
cM capacity (veh/h)			1608		1013	1074

Direction, Lane #	EB 1	EB 2	WB 1	WB 2	NB 1
Volume Total	0	21	0	0	25
Volume Left	0	0	0	0	25
Volume Right	0	21	0	0	0
cSH	1700	1700	1700	1700	1013
Volume to Capacity	0.00	0.01	0.00	0.00	0.02
Queue Length 95th (ft)	0	0	0	0	2
Control Delay (s)	0.0	0.0	0.0	0.0	8.6
Lane LOS					A
Approach Delay (s)	0.0		0.0		8.6
Approach LOS					A

Intersection Summary			
Average Delay	4.7		
Intersection Capacity Utilization	13.3%	ICU Level of Service	A
Analysis Period (min)	15		

Year 2014 Build PM Peak Hour
City of San Bernardino
Downtown San Bernardino Passenger Rail Project (With 3rd St Closure)

Level Of Service Computation Report
2000 HCM Unsignalized Method (Base Volume Alternative)

Intersection #5 J St and 2nd St

Average Delay (sec/veh): 6.3 Worst Case Level Of Service: F[99.1]

Street Name:	J St						2nd St					
Approach:	North Bound			South Bound			East Bound			West Bound		
Movement:	L	T	R	L	T	R	L	T	R	L	T	R
Control:	Stop Sign			Stop Sign			Uncontrolled			Uncontrolled		
Rights:	Include			Include			Include			Include		
Lanes:	0 0 1! 0 0			0 0 1! 0 0			1 0 1 1 0			1 0 1 1 0		
Volume Module:												
Base Vol:	12	4	145	40	7	4	4	838	16	137	448	35
Growth Adj:	1.00	1.00	1.00	1.00	1.00	1.00	1.00	1.00	1.00	1.00	1.00	1.00
Initial Bse:	12	4	145	40	7	4	4	838	16	137	448	35
User Adj:	1.00	1.00	1.00	1.00	1.00	1.00	1.00	1.00	1.00	1.00	1.00	1.00
PHF Adj:	0.95	0.95	0.95	0.95	0.95	0.95	0.95	0.95	0.95	0.95	0.95	0.95
PHF Volume:	13	4	153	42	7	4	4	882	17	144	472	37
Reduct Vol:	0	0	0	0	0	0	0	0	0	0	0	0
FinalVolume:	13	4	153	42	7	4	4	882	17	144	472	37
Critical Gap Module:												
Critical Gp:	7.5	6.5	6.9	7.5	6.5	6.9	4.1	xxxx	xxxxx	4.1	xxxx	xxxxx
FollowUpTim:	3.5	4.0	3.3	3.5	4.0	3.3	2.2	xxxx	xxxxx	2.2	xxxx	xxxxx
Capacity Module:												
Cnflict Vol:	1427	1696	449	1230	1686	254	508	xxxx	xxxxx	899	xxxx	xxxxx
Potent Cap.:	97	94	562	136	95	751	1067	xxxx	xxxxx	764	xxxx	xxxxx
Move Cap.:	77	76	562	81	77	751	1067	xxxx	xxxxx	764	xxxx	xxxxx
Volume/Cap:	0.16	0.06	0.27	0.52	0.10	0.01	0.00	xxxx	xxxx	0.19	xxxx	xxxx
Level Of Service Module:												
2Way95thQ:	xxxx	xxxx	xxxxx	xxxx	xxxx	xxxxx	0.0	xxxx	xxxxx	0.7	xxxx	xxxxx
Control Del:	xxxxx	xxxx	xxxxx	xxxxx	xxxx	xxxxx	8.4	xxxx	xxxxx	10.8	xxxx	xxxxx
LOS by Move:	*	*	*	*	*	*	A	*	*	B	*	*
Movement:	LT -	LTR -	RT	LT -	LTR -	RT	LT -	LTR -	RT	LT -	LTR -	RT
Shared Cap.:	xxxx	345	xxxxx	xxxx	86	xxxxx	xxxx	xxxx	xxxxx	xxxx	xxxx	xxxxx
SharedQueue:	xxxxx	2.6	xxxxx	xxxxx	2.9	xxxxx	xxxxx	xxxx	xxxxx	xxxxx	xxxx	xxxxx
Shrd ConDel:	xxxxx	25.2	xxxxx	xxxxx	99.1	xxxxx	xxxxx	xxxx	xxxxx	xxxxx	xxxx	xxxxx
Shared LOS:	*	D	*	*	F	*	*	*	*	*	*	*
ApproachDel:		25.2			99.1			xxxxxx			xxxxxx	
ApproachLOS:		D			F			*			*	

Note: Queue reported is the number of cars per lane.

Year 2014 Build PM Peak Hour
City of San Bernardino
Downtown San Bernardino Passenger Rail Project (With 3rd St Closure)

Level Of Service Computation Report
2000 HCM Unsignalized Method (Base Volume Alternative)

Intersection #6 J St and Rialto Ave

Average Delay (sec/veh): 49.1 Worst Case Level Of Service: F[398.9]

Street Name:	J St						Rialto Ave					
Approach:	North Bound			South Bound			East Bound			West Bound		
Movement:	L	T	R	L	T	R	L	T	R	L	T	R
Control:	Stop Sign			Stop Sign			Uncontrolled			Uncontrolled		
Rights:	Include			Include			Include			Include		
Lanes:	0 0 1! 0 0			0 0 1! 0 0			0 1 0 1 0			0 1 0 1 0		
Volume Module:												
Base Vol:	19	81	48	68	51	22	59	375	10	91	611	20
Growth Adj:	1.00	1.00	1.00	1.00	1.00	1.00	1.00	1.00	1.00	1.00	1.00	1.00
Initial Bse:	19	81	48	68	51	22	59	375	10	91	611	20
User Adj:	1.00	1.00	1.00	1.00	1.00	1.00	1.00	1.00	1.00	1.00	1.00	1.00
PHF Adj:	0.97	0.97	0.97	0.97	0.97	0.97	0.97	0.97	0.97	0.97	0.97	0.97
PHF Volume:	20	84	49	70	53	23	61	387	10	94	630	21
Reduct Vol:	0	0	0	0	0	0	0	0	0	0	0	0
FinalVolume:	20	84	49	70	53	23	61	387	10	94	630	21
Critical Gap Module:												
Critical Gp:	7.5	6.5	6.9	7.5	6.5	6.9	4.1	xxxx	xxxxx	4.1	xxxx	xxxxx
FollowUpTim:	3.5	4.0	3.3	3.5	4.0	3.3	2.2	xxxx	xxxxx	2.2	xxxx	xxxxx
Capacity Module:												
Cnflict Vol:	1042	1352	198	1185	1346	325	651	xxxx	xxxxx	397	xxxx	xxxxx
Potent Cap.:	187	152	816	147	153	676	945	xxxx	xxxxx	1173	xxxx	xxxxx
Move Cap.:	111	129	816	60	130	676	945	xxxx	xxxxx	1173	xxxx	xxxxx
Volume/Cap:	0.18	0.65	0.06	1.17	0.40	0.03	0.06	xxxx	xxxx	0.08	xxxx	xxxx
Level Of Service Module:												
2Way95thQ:	xxxx	xxxx	xxxxx	xxxx	xxxx	xxxxx	0.2	xxxx	xxxxx	0.3	xxxx	xxxxx
Control Del:	xxxxx	xxxx	xxxxx	xxxxx	xxxx	xxxxx	9.1	xxxx	xxxxx	8.3	xxxx	xxxxx
LOS by Move:	*	*	*	*	*	*	A	*	*	A	*	*
Movement:	LT	LTR	RT	LT	LTR	RT	LT	LTR	RT	LT	LTR	RT
Shared Cap.:	xxxx	173	xxxxx	xxxx	90	xxxxx	xxxx	xxxx	xxxxx	xxxx	xxxx	xxxxx
SharedQueue:	xxxxx	6.4	xxxxx	xxxxx	11.6	xxxxx	0.2	xxxx	xxxxx	0.3	xxxx	xxxxx
Shrd ConDel:	xxxxx	94.4	xxxxx	xxxxx	399	xxxxx	9.1	xxxx	xxxxx	8.3	xxxx	xxxxx
Shared LOS:	*	F	*	*	F	*	A	*	*	A	*	*
ApproachDel:		94.4			398.9			xxxxxx			xxxxxx	
ApproachLOS:		F			F			*			*	

Note: Queue reported is the number of cars per lane.

Movement	EBL	EBT	EBR	WBL	WBT	WBR	NBL	NBT	NBR	SBL	SBT	SBR
Lane Configurations												
Ideal Flow (vphpl)	1700	1800	1800	1700	1800	1800	1800	1800	1800	1800	1800	1800
Total Lost time (s)	4.0	4.0		4.0	4.0			4.0	4.0		4.0	4.0
Lane Util. Factor	1.00	*1.00		1.00	*1.00			*1.00	1.00		*1.00	1.00
Frt	1.00	1.00		1.00	1.00			1.00	1.00		1.00	1.00
Flt Protected	1.00	1.00		1.00	1.00			1.00	1.00		1.00	1.00
Satd. Flow (prot)	1700	3600		1700	3600			3600	1800		1800	1800
Flt Permitted	1.00	1.00		1.00	1.00			1.00	1.00		1.00	1.00
Satd. Flow (perm)	1700	3600		1700	3600			3600	1800		1800	1800
Volume (vph)	39	808	15	98	633	8	10	4	32	14	20	19
Peak-hour factor, PHF	0.97	0.97	0.97	0.97	0.97	0.97	0.97	0.97	0.97	0.97	0.97	0.97
Adj. Flow (vph)	40	833	15	101	653	8	10	4	33	14	21	20
RTOR Reduction (vph)	0	2	0	0	1	0	0	0	23	0	0	14
Lane Group Flow (vph)	40	846	0	101	660	0	0	14	10	0	35	6
Turn Type	Perm			Perm			Perm		Perm	Perm		Perm
Protected Phases		4			8			2			6	
Permitted Phases	4			8			2		2	6		6
Actuated Green, G (s)	44.0	44.0		44.0	44.0			23.0	23.0		23.0	23.0
Effective Green, g (s)	44.0	44.0		44.0	44.0			23.0	23.0		23.0	23.0
Actuated g/C Ratio	0.59	0.59		0.59	0.59			0.31	0.31		0.31	0.31
Clearance Time (s)	4.0	4.0		4.0	4.0			4.0	4.0		4.0	4.0
Lane Grp Cap (vph)	997	2112		997	2112			1104	552		552	552
v/s Ratio Prot		c0.24			0.18							
v/s Ratio Perm	0.02			0.06				0.00	0.01		0.02	0.00
v/c Ratio	0.04	0.40		0.10	0.31			0.01	0.02		0.06	0.01
Uniform Delay, d1	6.6	8.4		6.8	7.8			18.1	18.1		18.4	18.1
Progression Factor	1.00	1.00		0.76	0.79			1.13	1.30		1.00	1.00
Incremental Delay, d2	0.1	0.6		0.2	0.4			0.0	0.1		0.2	0.0
Delay (s)	6.6	8.9		5.3	6.6			20.4	23.6		18.6	18.1
Level of Service	A	A		A	A			C	C		B	B
Approach Delay (s)		8.8			6.4			22.7			18.4	
Approach LOS		A			A			C			B	

Intersection Summary			
HCM Average Control Delay	8.5	HCM Level of Service	A
HCM Volume to Capacity ratio	0.28		
Actuated Cycle Length (s)	75.0	Sum of lost time (s)	8.0
Intersection Capacity Utilization	48.7%	ICU Level of Service	A
Analysis Period (min)	15		

c Critical Lane Group

Movement	EBL	EBT	WBT	WBR	SBL	SBR
Lane Configurations						
Sign Control		Free	Free		Stop	
Grade		0%	0%		0%	
Volume (veh/h)	0	502	623	57	0	144
Peak Hour Factor	0.95	0.95	0.95	0.95	0.95	0.95
Hourly flow rate (vph)	0	528	656	60	0	152
Pedestrians						
Lane Width (ft)						
Walking Speed (ft/s)						
Percent Blockage						
Right turn flare (veh)						
Median type					None	
Median storage veh)						
Upstream signal (ft)						
pX, platoon unblocked						
vC, conflicting volume	716				950	358
vC1, stage 1 conf vol						
vC2, stage 2 conf vol						
vCu, unblocked vol	716				950	358
tC, single (s)	4.1				6.8	6.9
tC, 2 stage (s)						
tF (s)	2.2				3.5	3.3
p0 queue free %	100				100	76
cM capacity (veh/h)	894				262	644

Direction, Lane #	EB 1	EB 2	WB 1	WB 2	SB 1
Volume Total	264	264	437	279	152
Volume Left	0	0	0	0	0
Volume Right	0	0	0	60	152
cSH	1700	1700	1700	1700	644
Volume to Capacity	0.16	0.16	0.26	0.16	0.24
Queue Length 95th (ft)	0	0	0	0	23
Control Delay (s)	0.0	0.0	0.0	0.0	12.3
Lane LOS					B
Approach Delay (s)	0.0		0.0		12.3
Approach LOS					B

Intersection Summary			
Average Delay	1.3		
Intersection Capacity Utilization	36.2%	ICU Level of Service	A
Analysis Period (min)	15		

Movement	EBL	EBT	EBR	WBL	WBT	WBR	NBL	NBT	NBR	SBL	SBT	SBR
Lane Configurations												
Ideal Flow (vphpl)	1800	1800	1800	1700	1800	1800	1800	1800	1800	1800	1800	1700
Total Lost time (s)		4.0		4.0	4.0						4.0	4.0
Lane Util. Factor		*1.00		1.00	*1.00						*1.00	*1.00
Frt		1.00		1.00	1.00						1.00	1.00
Flt Protected		1.00		1.00	1.00						1.00	1.00
Satd. Flow (prot)		3600		1700	3600						3600	3400
Flt Permitted		1.00		1.00	1.00						1.00	1.00
Satd. Flow (perm)		3600		1700	3600						3600	3400
Volume (vph)	0	10	0	88	4	0	0	0	0	104	337	3
Peak-hour factor, PHF	0.86	0.86	0.86	0.86	0.86	0.86	0.86	0.86	0.86	0.86	0.86	0.86
Adj. Flow (vph)	0	12	0	102	5	0	0	0	0	121	392	3
RTOR Reduction (vph)	0	0	0	0	0	0	0	0	0	0	0	2
Lane Group Flow (vph)	0	12	0	102	5	0	0	0	0	0	513	1
Turn Type				Prot						Split		Perm
Protected Phases		4		3	8					6	6	
Permitted Phases												6
Actuated Green, G (s)		20.0		26.0	50.0						32.0	32.0
Effective Green, g (s)		20.0		26.0	50.0						32.0	32.0
Actuated g/C Ratio		0.22		0.29	0.56						0.36	0.36
Clearance Time (s)		4.0		4.0	4.0						4.0	4.0
Lane Grp Cap (vph)		800		491	2000						1280	1209
v/s Ratio Prot		c0.00		c0.06	0.00						c0.14	
v/s Ratio Perm												0.00
v/c Ratio		0.01		0.21	0.00						0.40	0.00
Uniform Delay, d1		27.3		24.2	8.9						21.8	18.7
Progression Factor		1.00		1.68	0.49						1.00	1.00
Incremental Delay, d2		0.0		1.0	0.0						0.9	0.0
Delay (s)		27.3		41.6	4.4						22.7	18.7
Level of Service		C		D	A						C	B
Approach Delay (s)		27.3			39.9			0.0			22.7	
Approach LOS		C			D			A			C	

Intersection Summary			
HCM Average Control Delay	25.7	HCM Level of Service	C
HCM Volume to Capacity ratio	0.24		
Actuated Cycle Length (s)	90.0	Sum of lost time (s)	12.0
Intersection Capacity Utilization	61.7%	ICU Level of Service	B
Analysis Period (min)	15		

c Critical Lane Group

Movement	EBL	EBT	EBR	WBL	WBT	WBR	NBL	NBT	NBR	SBL	SBT	SBR
Lane Configurations												
Ideal Flow (vphpl)	1800	1800	1800	1600	1800	1800	1800	1800	1800	1700	1800	1800
Total Lost time (s)		4.0	4.0	4.0	4.0					4.0	4.0	4.0
Lane Util. Factor		*1.00	1.00	*1.00	*1.00					*1.00	*1.00	*1.00
Frt		1.00	1.00	1.00	1.00					1.00	1.00	1.00
Flt Protected		1.00	1.00	1.00	1.00					1.00	1.00	1.00
Satd. Flow (prot)		5400	1800	3200	3600					1700	1800	1800
Flt Permitted		1.00	1.00	1.00	1.00					1.00	1.00	1.00
Satd. Flow (perm)		5400	1800	3200	3600					1700	1800	1800
Volume (vph)	0	651	170	729	372	0	0	0	0	56	0	371
Peak-hour factor, PHF	0.93	0.93	0.93	0.93	0.93	0.93	0.93	0.93	0.93	0.93	0.93	0.93
Adj. Flow (vph)	0	700	183	784	400	0	0	0	0	60	0	399
RTOR Reduction (vph)	0	0	137	0	0	0	0	0	0	0	165	165
Lane Group Flow (vph)	0	700	46	784	400	0	0	0	0	60	34	35
Turn Type			Perm	Prot						Split		Perm
Protected Phases		4		3	8					6	6	
Permitted Phases			4									6
Actuated Green, G (s)		19.0	19.0	31.0	54.0					13.0	13.0	13.0
Effective Green, g (s)		19.0	19.0	31.0	54.0					13.0	13.0	13.0
Actuated g/C Ratio		0.25	0.25	0.41	0.72					0.17	0.17	0.17
Clearance Time (s)		4.0	4.0	4.0	4.0					4.0	4.0	4.0
Lane Grp Cap (vph)		1368	456	1323	2592					295	312	312
v/s Ratio Prot		c0.13		c0.24	0.11					c0.04	0.02	
v/s Ratio Perm			0.03									0.02
v/c Ratio		0.51	0.10	0.59	0.15					0.20	0.11	0.11
Uniform Delay, d1		24.0	21.5	17.1	3.3					26.6	26.1	26.1
Progression Factor		0.69	1.52	1.00	1.00					1.00	1.00	1.00
Incremental Delay, d2		1.3	0.4	2.0	0.1					1.6	0.7	0.7
Delay (s)		17.9	33.1	19.1	3.4					28.1	26.8	26.8
Level of Service		B	C	B	A					C	C	C
Approach Delay (s)		21.0			13.8			0.0			27.0	
Approach LOS		C			B			A			C	

Intersection Summary			
HCM Average Control Delay	18.7	HCM Level of Service	B
HCM Volume to Capacity ratio	0.49		
Actuated Cycle Length (s)	75.0	Sum of lost time (s)	12.0
Intersection Capacity Utilization	53.6%	ICU Level of Service	A
Analysis Period (min)	15		

c Critical Lane Group

Movement	EBL	EBT	EBR	WBL	WBT	WBR	NBL	NBT	NBR	SBL	SBT	SBR
Lane Configurations												
Ideal Flow (vphpl)	1700	1800	1800	1800	1800	1800	1800	1800	1800	1800	1800	1800
Total Lost time (s)	4.0	4.0			4.0	4.0		4.0				
Lane Util. Factor	1.00	*1.00			*1.00	1.00		*1.00				
Frt	1.00	1.00			1.00	1.00		1.00				
Flt Protected	1.00	1.00			1.00	1.00		1.00				
Satd. Flow (prot)	1700	3600			5400	1800		3600				
Flt Permitted	1.00	1.00			1.00	1.00		1.00				
Satd. Flow (perm)	1700	3600			5400	1800		3600				
Volume (vph)	3	113	0	0	87	395	12	497	226	0	0	0
Peak-hour factor, PHF	0.86	0.86	0.86	0.86	0.86	0.86	0.86	0.86	0.86	0.86	0.86	0.86
Adj. Flow (vph)	3	131	0	0	101	459	14	578	263	0	0	0
RTOR Reduction (vph)	0	0	0	0	0	247	0	63	0	0	0	0
Lane Group Flow (vph)	3	131	0	0	101	212	0	792	0	0	0	0
Turn Type	Prot					Perm	Split					
Protected Phases	7	4			8		2	2				
Permitted Phases						8						
Actuated Green, G (s)	12.0	48.0			32.0	32.0		34.0				
Effective Green, g (s)	12.0	48.0			32.0	32.0		34.0				
Actuated g/C Ratio	0.13	0.53			0.36	0.36		0.38				
Clearance Time (s)	4.0	4.0			4.0	4.0		4.0				
Lane Grp Cap (vph)	227	1920			1920	640		1360				
v/s Ratio Prot	0.00	c0.04			0.02			c0.22				
v/s Ratio Perm						c0.12						
v/c Ratio	0.01	0.07			0.05	0.33		0.58				
Uniform Delay, d1	33.9	10.2			19.0	21.2		22.3				
Progression Factor	0.72	2.16			1.00	1.00		1.54				
Incremental Delay, d2	0.1	0.1			0.1	1.4		1.8				
Delay (s)	24.5	22.1			19.1	22.6		36.1				
Level of Service	C	C			B	C		D				
Approach Delay (s)		22.1			21.9			36.1			0.0	
Approach LOS		C			C			D			A	

Intersection Summary			
HCM Average Control Delay	29.8	HCM Level of Service	C
HCM Volume to Capacity ratio	0.40		
Actuated Cycle Length (s)	90.0	Sum of lost time (s)	12.0
Intersection Capacity Utilization	61.7%	ICU Level of Service	B
Analysis Period (min)	15		

c Critical Lane Group

Movement	EBL	EBT	EBR	WBL	WBT	WBR	NBL	NBT	NBR	SBL	SBT	SBR
Lane Configurations												
Ideal Flow (vphpl)	1600	1800	1800	1800	1800	1800	1700	1800	1800	1800	1800	1800
Total Lost time (s)	4.0	4.0			4.0	4.0	4.0	4.0	4.0			
Lane Util. Factor	*1.00	*1.00			*1.00	1.00	*1.00	*1.00	*1.00			
Frt	1.00	1.00			1.00	1.00	1.00	1.00	1.00			
Flt Protected	1.00	1.00			1.00	1.00	1.00	1.00	1.00			
Satd. Flow (prot)	3200	3600			7200	1800	1700	1800	1800			
Flt Permitted	1.00	1.00			1.00	1.00	1.00	1.00	1.00			
Satd. Flow (perm)	3200	3600			7200	1800	1700	1800	1800			
Volume (vph)	307	410	0	0	992	426	109	2	299	0	0	0
Peak-hour factor, PHF	0.96	0.96	0.96	0.96	0.96	0.96	0.96	0.96	0.96	0.96	0.96	0.96
Adj. Flow (vph)	320	427	0	0	1033	444	114	2	311	0	0	0
RTOR Reduction (vph)	0	0	0	0	0	0	0	110	121	0	0	0
Lane Group Flow (vph)	320	427	0	0	1033	444	114	40	42	0	0	0
Turn Type	Prot					Free	Split		Prot			
Protected Phases	7	4			8		2	2	2			
Permitted Phases						Free						
Actuated Green, G (s)	26.0	59.0			29.0	90.0	23.0	23.0	23.0			
Effective Green, g (s)	26.0	59.0			29.0	90.0	23.0	23.0	23.0			
Actuated g/C Ratio	0.29	0.66			0.32	1.00	0.26	0.26	0.26			
Clearance Time (s)	4.0	4.0			4.0		4.0	4.0	4.0			
Lane Grp Cap (vph)	924	2360			2320	1800	434	460	460			
v/s Ratio Prot	c0.10	0.12			c0.14		0.07	0.02	0.02			
v/s Ratio Perm						c0.25						
v/c Ratio	0.35	0.18			0.45	0.25	0.26	0.09	0.09			
Uniform Delay, d1	25.3	6.1			24.1	0.0	26.7	25.5	25.5			
Progression Factor	1.00	1.00			1.00	1.00	1.00	1.00	1.00			
Incremental Delay, d2	1.0	0.2			0.6	0.3	1.5	0.4	0.4			
Delay (s)	26.3	6.2			24.8	0.3	28.2	25.9	25.9			
Level of Service	C	A			C	A	C	C	C			
Approach Delay (s)		14.8			17.4			26.5			0.0	
Approach LOS		B			B			C			A	

Intersection Summary			
HCM Average Control Delay	18.2	HCM Level of Service	B
HCM Volume to Capacity ratio	0.35		
Actuated Cycle Length (s)	90.0	Sum of lost time (s)	8.0
Intersection Capacity Utilization	53.6%	ICU Level of Service	A
Analysis Period (min)	15		

c Critical Lane Group

Movement	EBL	EBT	EBR	WBL	WBT	WBR	NBL	NBT	NBR	SBL	SBT	SBR
Lane Configurations												
Ideal Flow (vphpl)	1700	1800	1800	1700	1800	1800	1700	1800	1800	1700	1800	1800
Total Lost time (s)	4.0	4.0		4.0	4.0		4.0	4.0		4.0	4.0	
Lane Util. Factor	1.00	*1.00		1.00	*1.00		1.00	*1.00		1.00	*1.00	
Frt	1.00	1.00		1.00	1.00		1.00	1.00		1.00	1.00	
Flt Protected	1.00	1.00		1.00	1.00		1.00	1.00		1.00	1.00	
Satd. Flow (prot)	1700	3600		1700	3600		1700	3600		1700	3600	
Flt Permitted	1.00	1.00		1.00	1.00		1.00	1.00		1.00	1.00	
Satd. Flow (perm)	1700	3600		1700	3600		1700	3600		1700	3600	
Volume (vph)	80	131	96	65	311	12	67	243	76	10	87	74
Peak-hour factor, PHF	0.96	0.96	0.96	0.96	0.96	0.96	0.96	0.96	0.96	0.96	0.96	0.96
Adj. Flow (vph)	83	136	100	68	324	12	70	253	79	10	91	77
RTOR Reduction (vph)	0	69	0	0	4	0	0	44	0	0	54	0
Lane Group Flow (vph)	83	167	0	68	332	0	70	288	0	10	114	0
Turn Type	Prot			Prot			Perm			Perm		
Protected Phases	5	2		1	6			8			4	
Permitted Phases							8			4		
Actuated Green, G (s)	20.0	23.0		18.0	21.0		22.0	22.0		22.0	22.0	
Effective Green, g (s)	20.0	23.0		18.0	21.0		22.0	22.0		22.0	22.0	
Actuated g/C Ratio	0.27	0.31		0.24	0.28		0.29	0.29		0.29	0.29	
Clearance Time (s)	4.0	4.0		4.0	4.0		4.0	4.0		4.0	4.0	
Lane Grp Cap (vph)	453	1104		408	1008		499	1056		499	1056	
v/s Ratio Prot	c0.05	0.05		0.04	c0.09			c0.08			0.03	
v/s Ratio Perm							0.04			0.01		
v/c Ratio	0.18	0.15		0.17	0.33		0.14	0.27		0.02	0.11	
Uniform Delay, d1	21.2	18.9		22.6	21.4		19.5	20.4		18.8	19.3	
Progression Factor	1.00	1.00		1.00	1.00		1.00	1.00		1.00	1.00	
Incremental Delay, d2	0.9	0.3		0.9	0.9		0.6	0.6		0.1	0.2	
Delay (s)	22.1	19.2		23.4	22.3		20.1	21.0		18.9	19.5	
Level of Service	C	B		C	C		C	C		B	B	
Approach Delay (s)		19.9			22.5			20.8			19.5	
Approach LOS		B			C			C			B	

Intersection Summary			
HCM Average Control Delay	21.0	HCM Level of Service	C
HCM Volume to Capacity ratio	0.26		
Actuated Cycle Length (s)	75.0	Sum of lost time (s)	12.0
Intersection Capacity Utilization	40.8%	ICU Level of Service	A
Analysis Period (min)	15		

c Critical Lane Group

Movement	EBL	EBT	EBR	WBL	WBT	WBR	NBL	NBT	NBR	SBL	SBT	SBR
Lane Configurations												
Ideal Flow (vphpl)	1700	1800	1800	1700	1800	1800	1700	1800	1800	1700	1800	1800
Total Lost time (s)	4.0	4.0		4.0	4.0		4.0	4.0		4.0	4.0	
Lane Util. Factor	1.00	*1.00		1.00	*1.00		1.00	*1.00		1.00	*1.00	
Frt	1.00	1.00		1.00	1.00		1.00	1.00		1.00	1.00	
Flt Protected	1.00	1.00		1.00	1.00		1.00	1.00		1.00	1.00	
Satd. Flow (prot)	1700	5400		1700	5400		1700	3600		1700	3600	
Flt Permitted	1.00	1.00		1.00	1.00		1.00	1.00		1.00	1.00	
Satd. Flow (perm)	1700	5400		1700	5400		1700	3600		1700	3600	
Volume (vph)	104	513	46	84	1080	85	362	193	50	40	135	75
Peak-hour factor, PHF	0.92	0.92	0.92	0.92	0.92	0.92	0.92	0.92	0.92	0.92	0.92	0.92
Adj. Flow (vph)	113	558	50	91	1174	92	393	210	54	43	147	82
RTOR Reduction (vph)	0	13	0	0	11	0	0	27	0	0	71	0
Lane Group Flow (vph)	113	595	0	91	1255	0	393	237	0	43	158	0
Turn Type	Prot			Prot			pm+pt			pm+pt		
Protected Phases	7	4		3	8		5	2		1	6	
Permitted Phases							2			6		
Actuated Green, G (s)	13.0	31.0		11.0	29.0		38.0	27.0		19.0	12.0	
Effective Green, g (s)	13.0	31.0		11.0	29.0		38.0	27.0		19.0	12.0	
Actuated g/C Ratio	0.14	0.34		0.12	0.32		0.41	0.29		0.21	0.13	
Clearance Time (s)	4.0	4.0		4.0	4.0		4.0	4.0		4.0	4.0	
Lane Grp Cap (vph)	240	1820		203	1702		702	1057		351	470	
v/s Ratio Prot	c0.07	0.11		0.05	c0.23		c0.13	0.07		0.01	0.04	
v/s Ratio Perm							0.10			0.02		
v/c Ratio	0.47	0.33		0.45	0.74		0.56	0.22		0.12	0.34	
Uniform Delay, d1	36.3	22.7		37.7	28.1		20.8	24.6		29.7	36.4	
Progression Factor	1.00	1.00		1.00	1.00		1.00	1.00		1.00	1.00	
Incremental Delay, d2	6.5	0.5		7.0	2.9		3.2	0.5		0.7	1.9	
Delay (s)	42.8	23.2		44.7	31.0		24.0	25.1		30.4	38.3	
Level of Service	D	C		D	C		C	C		C	D	
Approach Delay (s)		26.3			31.9			24.4			37.1	
Approach LOS		C			C			C			D	

Intersection Summary			
HCM Average Control Delay	29.4	HCM Level of Service	C
HCM Volume to Capacity ratio	0.61		
Actuated Cycle Length (s)	92.0	Sum of lost time (s)	12.0
Intersection Capacity Utilization	72.7%	ICU Level of Service	C
Analysis Period (min)	15		

c Critical Lane Group

Movement	EBL	EBT	EBR	WBL	WBT	WBR	NBL	NBT	NBR	SBL	SBT	SBR
Lane Configurations												
Ideal Flow (vphpl)	1700	1800	1800	1700	1800	1800	1700	1800	1800	1700	1800	1800
Total Lost time (s)	4.0	4.0		4.0	4.0		4.0	4.0		4.0	4.0	
Lane Util. Factor	1.00	*1.00		1.00	*1.00		1.00	*1.00		1.00	*1.00	
Frt	1.00	1.00		1.00	1.00		1.00	1.00		1.00	1.00	
Flt Protected	1.00	1.00		1.00	1.00		1.00	1.00		1.00	1.00	
Satd. Flow (prot)	1700	3600		1700	3600		1700	3600		1700	3600	
Flt Permitted	1.00	1.00		1.00	1.00		1.00	1.00		1.00	1.00	
Satd. Flow (perm)	1700	3600		1700	3600		1700	3600		1700	3600	
Volume (vph)	49	358	28	28	528	233	71	195	22	94	98	67
Peak-hour factor, PHF	0.87	0.87	0.87	0.87	0.87	0.87	0.87	0.87	0.87	0.87	0.87	0.87
Adj. Flow (vph)	56	411	32	32	607	268	82	224	25	108	113	77
RTOR Reduction (vph)	0	8	0	0	76	0	0	12	0	0	51	0
Lane Group Flow (vph)	56	435	0	32	799	0	82	237	0	108	139	0
Turn Type	Perm			Perm			Perm			Perm		
Protected Phases		4			8			2			6	
Permitted Phases	4			8			2			6		
Actuated Green, G (s)	42.0	42.0		42.0	42.0		25.0	25.0		25.0	25.0	
Effective Green, g (s)	42.0	42.0		42.0	42.0		25.0	25.0		25.0	25.0	
Actuated g/C Ratio	0.56	0.56		0.56	0.56		0.33	0.33		0.33	0.33	
Clearance Time (s)	4.0	4.0		4.0	4.0		4.0	4.0		4.0	4.0	
Lane Grp Cap (vph)	952	2016		952	2016		567	1200		567	1200	
v/s Ratio Prot		0.12			c0.22			c0.07			0.04	
v/s Ratio Perm	0.03			0.02			0.05			0.06		
v/c Ratio	0.06	0.22		0.03	0.40		0.14	0.20		0.19	0.12	
Uniform Delay, d1	7.5	8.3		7.4	9.3		17.5	17.8		17.8	17.3	
Progression Factor	0.53	0.52		0.61	0.38		1.00	1.00		1.00	1.00	
Incremental Delay, d2	0.1	0.2		0.1	0.5		0.5	0.4		0.7	0.2	
Delay (s)	4.1	4.6		4.6	4.0		18.0	18.2		18.5	17.5	
Level of Service	A	A		A	A		B	B		B	B	
Approach Delay (s)		4.5			4.0			18.2			17.9	
Approach LOS		A			A			B			B	

Intersection Summary			
HCM Average Control Delay	8.5	HCM Level of Service	A
HCM Volume to Capacity ratio	0.32		
Actuated Cycle Length (s)	75.0	Sum of lost time (s)	8.0
Intersection Capacity Utilization	52.2%	ICU Level of Service	A
Analysis Period (min)	15		

c Critical Lane Group

Movement	EBL	EBT	EBR	WBL	WBT	WBR	NBL	NBT	NBR	SBL	SBT	SBR
Lane Configurations												
Sign Control		Stop			Stop			Free			Free	
Grade		0%			0%			0%			0%	
Volume (veh/h)	2	0	2	55	0	17	0	216	34	13	202	0
Peak Hour Factor	0.95	0.95	0.95	0.95	0.95	0.95	0.95	0.95	0.95	0.95	0.95	0.95
Hourly flow rate (vph)	2	0	2	58	0	18	0	227	36	14	213	0
Pedestrians												
Lane Width (ft)												
Walking Speed (ft/s)												
Percent Blockage												
Right turn flare (veh)												
Median type		None			None							
Median storage veh)												
Upstream signal (ft)											931	
pX, platoon unblocked												
vC, conflicting volume	372	503	106	381	485	132	213			263		
vC1, stage 1 conf vol												
vC2, stage 2 conf vol												
vCu, unblocked vol	372	503	106	381	485	132	213			263		
tC, single (s)	7.5	6.5	6.9	7.5	6.5	6.9	4.1			4.1		
tC, 2 stage (s)												
tF (s)	3.5	4.0	3.3	3.5	4.0	3.3	2.2			2.2		
p0 queue free %	100	100	100	89	100	98	100			99		
cM capacity (veh/h)	549	469	934	551	480	900	1370			1313		

Direction, Lane #	EB 1	WB 1	NB 1	NB 2	SB 1	SB 2
Volume Total	4	76	114	149	120	106
Volume Left	2	58	0	0	14	0
Volume Right	2	18	0	36	0	0
cSH	692	606	1370	1700	1313	1700
Volume to Capacity	0.01	0.12	0.00	0.09	0.01	0.06
Queue Length 95th (ft)	0	11	0	0	1	0
Control Delay (s)	10.2	11.8	0.0	0.0	1.0	0.0
Lane LOS	B	B			A	
Approach Delay (s)	10.2	11.8	0.0		0.5	
Approach LOS	B	B				

Intersection Summary			
Average Delay	1.8		
Intersection Capacity Utilization	29.4%	ICU Level of Service	A
Analysis Period (min)	15		

Year 2014 Build PM Peak Hour
City of San Bernardino
Downtown San Bernardino Passenger Rail Project (With 3rd St Closure)

Level Of Service Computation Report
2000 HCM Unsignalized Method (Base Volume Alternative)

Intersection #18 Parking Lot Entrance and Congress St

Average Delay (sec/veh): 7.1 Worst Case Level Of Service: A[9.2]

Street Name:	Parking Lot Entrance						Congress Street					
Approach:	North Bound			South Bound			East Bound			West Bound		
Movement:	L	T	R	L	T	R	L	T	R	L	T	R
Control:	Stop Sign			Stop Sign			Uncontrolled			Uncontrolled		
Rights:	Include			Include			Include			Include		
Lanes:	1 0 0 0 0			0 0 0 0 1			0 0 1! 0 0			0 0 0 0 0		
Volume Module:												
Base Vol:	25	0	0	0	0	47	14	0	25	0	0	0
Growth Adj:	1.00	1.00	1.00	1.00	1.00	1.00	1.00	1.00	1.00	1.00	1.00	1.00
Initial Bse:	25	0	0	0	0	47	14	0	25	0	0	0
User Adj:	1.00	1.00	1.00	1.00	1.00	1.00	1.00	1.00	1.00	1.00	1.00	1.00
PHF Adj:	0.95	0.95	0.95	0.95	0.95	0.95	0.95	0.95	0.95	0.95	0.95	0.95
PHF Volume:	26	0	0	0	0	49	15	0	26	0	0	0
Reduct Vol:	0	0	0	0	0	0	0	0	0	0	0	0
FinalVolume:	26	0	0	0	0	49	15	0	26	0	0	0
Critical Gap Module:												
Critical Gp:	7.1	xxxx	xxxxx	xxxxx	xxxx	6.2	4.1	xxxx	xxxxx	xxxxx	xxxx	xxxxx
FollowUpTim:	3.5	xxxx	xxxxx	xxxxx	xxxx	3.3	2.2	xxxx	xxxxx	xxxxx	xxxx	xxxxx
Capacity Module:												
Cnflict Vol:	43	xxxx	xxxxx	xxxx	xxxx	0	0	xxxx	xxxxx	xxxx	xxxx	xxxxx
Potent Cap.:	965	xxxx	xxxxx	xxxx	xxxx	900	900	xxxx	xxxxx	xxxx	xxxx	xxxxx
Move Cap.:	901	xxxx	xxxxx	xxxx	xxxx	900	900	xxxx	xxxxx	xxxx	xxxx	xxxxx
Volume/Cap:	0.03	xxxx	xxxx	xxxx	xxxx	0.05	0.02	xxxx	xxxx	xxxx	xxxx	xxxx
Level Of Service Module:												
2Way95thQ:	0.1	xxxx	xxxxx	xxxx	xxxx	0.2	0.0	xxxx	xxxxx	xxxx	xxxx	xxxxx
Control Del:	9.1	xxxx	xxxxx	xxxxx	xxxx	9.2	9.1	xxxx	xxxxx	xxxxx	xxxx	xxxxx
LOS by Move:	A	*	*	*	*	A	A	*	*	*	*	*
Movement:	LT	LTR	RT	LT	LTR	RT	LT	LTR	RT	LT	LTR	RT
Shared Cap.:	xxxx	xxxx	xxxxx	xxxx	xxxx	xxxxx	xxxx	xxxx	xxxxx	xxxx	xxxx	xxxxx
SharedQueue:	xxxxx	xxxx	xxxxx	xxxxx	xxxx	xxxxx	xxxxx	xxxx	xxxxx	xxxxx	xxxx	xxxxx
Shrd ConDel:	xxxxx	xxxx	xxxxx	xxxxx	xxxx	xxxxx	xxxxx	xxxx	xxxxx	xxxxx	xxxx	xxxxx
Shared LOS:	*	*	*	*	*	*	*	*	*	*	*	*
ApproachDel:	9.1			9.2			xxxxxx			xxxxxx		
ApproachLOS:	A			A			*			*		

Note: Queue reported is the number of cars per lane.

Movement	EBL	EBT	EBR	WBL	WBT	WBR	NBL	NBT	NBR	SBL	SBT	SBR
Lane Configurations												
Ideal Flow (vphpl)	1700	1800	1800	1700	1800	1800	1700	1800	1800	1700	1800	1800
Total Lost time (s)	4.0	4.0		4.0	4.0		4.0	4.0		4.0	4.0	4.0
Lane Util. Factor	1.00	*1.00		1.00	*1.00		1.00	1.00		1.00	*1.00	1.00
Frt	1.00	1.00		1.00	1.00		1.00	1.00		1.00	1.00	1.00
Flt Protected	1.00	1.00		1.00	1.00		1.00	1.00		1.00	1.00	1.00
Satd. Flow (prot)	1700	3600		1700	5400		1700	1800		1700	1800	1800
Flt Permitted	1.00	1.00		1.00	1.00		1.00	1.00		1.00	1.00	1.00
Satd. Flow (perm)	1700	3600		1700	5400		1700	1800		1700	1800	1800
Volume (vph)	141	547	52	96	921	27	107	405	105	36	322	177
Peak-hour factor, PHF	0.89	0.89	0.89	0.89	0.89	0.89	0.89	0.89	0.89	0.89	0.89	0.89
Adj. Flow (vph)	158	615	58	108	1035	30	120	455	118	40	362	199
RTOR Reduction (vph)	0	10	0	0	5	0	0	13	0	0	0	125
Lane Group Flow (vph)	158	663	0	108	1060	0	120	560	0	40	362	74
Turn Type	Prot			Prot			pm+pt			pm+pt		Perm
Protected Phases	7	4		3	8		5	2		1	6	
Permitted Phases							2			6		6
Actuated Green, G (s)	9.0	18.0		7.0	16.0		34.0	28.0		34.0	28.0	28.0
Effective Green, g (s)	9.0	18.0		7.0	16.0		34.0	28.0		34.0	28.0	28.0
Actuated g/C Ratio	0.12	0.24		0.09	0.21		0.45	0.37		0.45	0.37	0.37
Clearance Time (s)	4.0	4.0		4.0	4.0		4.0	4.0		4.0	4.0	4.0
Lane Grp Cap (vph)	204	864		159	1152		861	672		861	672	672
v/s Ratio Prot	c0.09	0.18		0.06	c0.20		c0.01	c0.31		0.00	0.20	
v/s Ratio Perm							0.06			0.02		0.04
v/c Ratio	0.77	0.77		0.68	0.92		0.14	0.83		0.05	0.54	0.11
Uniform Delay, d1	32.0	26.6		32.9	28.9		12.5	21.4		13.6	18.4	15.4
Progression Factor	1.00	1.00		1.00	1.00		1.07	0.75		0.34	0.67	1.33
Incremental Delay, d2	24.4	6.5		20.9	13.2		0.2	8.4		0.1	2.5	0.3
Delay (s)	56.4	33.0		53.8	42.1		13.6	24.5		4.8	14.8	20.8
Level of Service	E	C		D	D		B	C		A	B	C
Approach Delay (s)		37.5			43.2			22.6			16.1	
Approach LOS		D			D			C			B	

Intersection Summary			
HCM Average Control Delay	32.5	HCM Level of Service	C
HCM Volume to Capacity ratio	0.77		
Actuated Cycle Length (s)	75.0	Sum of lost time (s)	16.0
Intersection Capacity Utilization	74.1%	ICU Level of Service	D
Analysis Period (min)	15		

c Critical Lane Group

Movement	EBL	EBT	EBR	WBL	WBT	WBR	NBL	NBT	NBR	SBL	SBT	SBR
Lane Configurations												
Ideal Flow (vphpl)	1700	1800	1800	1700	1800	1800	1700	1800	1800	1700	1800	1800
Total Lost time (s)	4.0	4.0	4.0	4.0	4.0		4.0	4.0		4.0	4.0	
Lane Util. Factor	1.00	*1.00	1.00	1.00	*1.00		1.00	*1.00		1.00	*1.00	
Frt	1.00	1.00	1.00	1.00	1.00		1.00	1.00		1.00	1.00	
Flt Protected	1.00	1.00	1.00	1.00	1.00		1.00	1.00		1.00	1.00	
Satd. Flow (prot)	1700	1800	1800	1700	3600		1700	1800		1700	1800	
Flt Permitted	1.00	1.00	1.00	1.00	1.00		1.00	1.00		1.00	1.00	
Satd. Flow (perm)	1700	1800	1800	1700	3600		1700	1800		1700	1800	
Volume (vph)	71	333	113	97	531	26	130	581	102	31	421	47
Peak-hour factor, PHF	0.96	0.96	0.96	0.96	0.96	0.96	0.96	0.96	0.96	0.96	0.96	0.96
Adj. Flow (vph)	74	347	118	101	553	27	135	605	106	32	439	49
RTOR Reduction (vph)	0	0	88	0	5	0	0	8	0	0	5	0
Lane Group Flow (vph)	74	347	30	101	575	0	135	703	0	32	483	0
Turn Type	Perm		Perm	Perm			pm+pt			pm+pt		
Protected Phases		4			8		5	2		1	6	
Permitted Phases	4		4	8			2			6		
Actuated Green, G (s)	19.0	19.0	19.0	19.0	19.0		44.0	38.0		44.0	38.0	
Effective Green, g (s)	19.0	19.0	19.0	19.0	19.0		44.0	38.0		44.0	38.0	
Actuated g/C Ratio	0.25	0.25	0.25	0.25	0.25		0.59	0.51		0.59	0.51	
Clearance Time (s)	4.0	4.0	4.0	4.0	4.0		4.0	4.0		4.0	4.0	
Lane Grp Cap (vph)	431	456	456	431	912		1088	912		1088	912	
v/s Ratio Prot		c0.19			0.16		c0.01	c0.39		0.00	0.27	
v/s Ratio Perm	0.04		0.02	0.06			0.07			0.02		
v/c Ratio	0.17	0.76	0.07	0.23	0.63		0.12	0.77		0.03	0.53	
Uniform Delay, d1	21.9	25.9	21.3	22.2	24.9		7.6	15.0		9.3	12.5	
Progression Factor	0.99	1.03	1.90	0.83	0.86		1.00	1.00		1.24	0.90	
Incremental Delay, d2	0.8	10.9	0.3	1.2	3.2		0.2	6.2		0.0	1.8	
Delay (s)	22.6	37.7	40.6	19.8	24.7		7.9	21.2		11.5	13.0	
Level of Service	C	D	D	B	C		A	C		B	B	
Approach Delay (s)		36.2			24.0			19.1			12.9	
Approach LOS		D			C			B			B	

Intersection Summary			
HCM Average Control Delay	22.7	HCM Level of Service	C
HCM Volume to Capacity ratio	0.71		
Actuated Cycle Length (s)	75.0	Sum of lost time (s)	12.0
Intersection Capacity Utilization	80.0%	ICU Level of Service	D
Analysis Period (min)	15		

c Critical Lane Group

Movement	EBL	EBR	NBL	NBT	SBT	SBR
Lane Configurations						
Sign Control	Stop			Free	Free	
Grade	0%			0%	0%	
Volume (veh/h)	44	36	11	770	570	13
Peak Hour Factor	0.95	0.95	0.95	0.95	0.95	0.95
Hourly flow rate (vph)	46	38	12	811	600	14
Pedestrians						
Lane Width (ft)						
Walking Speed (ft/s)						
Percent Blockage						
Right turn flare (veh)						
Median type	None					
Median storage veh)						
Upstream signal (ft)					852	
pX, platoon unblocked						
vC, conflicting volume	1035	307	614			
vC1, stage 1 conf vol						
vC2, stage 2 conf vol						
vCu, unblocked vol	1035	307	614			
tC, single (s)	6.8	6.9	4.1			
tC, 2 stage (s)						
tF (s)	3.5	3.3	2.2			
p0 queue free %	80	95	99			
cM capacity (veh/h)	228	695	976			

Direction, Lane #	EB 1	NB 1	NB 2	SB 1	SB 2
Volume Total	84	282	540	400	214
Volume Left	46	12	0	0	0
Volume Right	38	0	0	0	14
cSH	327	976	1700	1700	1700
Volume to Capacity	0.26	0.01	0.32	0.24	0.13
Queue Length 95th (ft)	25	1	0	0	0
Control Delay (s)	19.8	0.5	0.0	0.0	0.0
Lane LOS	C	A			
Approach Delay (s)	19.8	0.2		0.0	
Approach LOS	C				

Intersection Summary			
Average Delay	1.2		
Intersection Capacity Utilization	42.2%	ICU Level of Service	A
Analysis Period (min)	15		

Movement	EBL	EBT	EBR	WBL	WBT	WBR	NBL	NBT	NBR	SBL	SBT	SBR
Lane Configurations												
Ideal Flow (vphpl)	1700	1800	1800	1700	1800	1800	1700	1800	1800	1700	1800	1800
Total Lost time (s)	4.0	4.0		4.0	4.0		4.0	4.0		4.0	4.0	
Lane Util. Factor	1.00	*1.00		1.00	*1.00		1.00	*1.00		1.00	*1.00	
Frt	1.00	1.00		1.00	1.00		1.00	1.00		1.00	1.00	
Flt Protected	1.00	1.00		1.00	1.00		1.00	1.00		1.00	1.00	
Satd. Flow (prot)	1700	3600		1700	3600		1700	3600		1700	3600	
Flt Permitted	1.00	1.00		1.00	1.00		1.00	1.00		1.00	1.00	
Satd. Flow (perm)	1700	3600		1700	3600		1700	3600		1700	3600	
Volume (vph)	46	335	67	27	381	17	91	400	48	15	294	60
Peak-hour factor, PHF	0.79	0.79	0.79	0.79	0.79	0.79	0.79	0.79	0.79	0.79	0.79	0.79
Adj. Flow (vph)	58	424	85	34	482	22	115	506	61	19	372	76
RTOR Reduction (vph)	0	24	0	0	4	0	0	13	0	0	25	0
Lane Group Flow (vph)	58	485	0	34	500	0	115	554	0	19	423	0
Turn Type	Perm			Perm			Perm			Perm		
Protected Phases		4			8			2			6	
Permitted Phases	4			8			2			6		
Actuated Green, G (s)	33.0	33.0		33.0	33.0		34.0	34.0		34.0	34.0	
Effective Green, g (s)	33.0	33.0		33.0	33.0		34.0	34.0		34.0	34.0	
Actuated g/C Ratio	0.44	0.44		0.44	0.44		0.45	0.45		0.45	0.45	
Clearance Time (s)	4.0	4.0		4.0	4.0		4.0	4.0		4.0	4.0	
Lane Grp Cap (vph)	748	1584		748	1584		771	1632		771	1632	
v/s Ratio Prot		0.13			c0.14			c0.15			0.12	
v/s Ratio Perm	0.03			0.02			0.07			0.01		
v/c Ratio	0.08	0.31		0.05	0.32		0.15	0.34		0.02	0.26	
Uniform Delay, d1	12.2	13.6		12.0	13.7		12.0	13.2		11.3	12.7	
Progression Factor	0.56	0.54		1.00	1.00		1.00	1.00		1.00	1.00	
Incremental Delay, d2	0.2	0.4		0.1	0.5		0.4	0.6		0.1	0.4	
Delay (s)	7.0	7.7		12.1	14.2		12.4	13.8		11.4	13.1	
Level of Service	A	A		B	B		B	B		B	B	
Approach Delay (s)		7.6			14.0			13.6			13.0	
Approach LOS		A			B			B			B	

Intersection Summary			
HCM Average Control Delay	12.1	HCM Level of Service	B
HCM Volume to Capacity ratio	0.33		
Actuated Cycle Length (s)	75.0	Sum of lost time (s)	8.0
Intersection Capacity Utilization	45.3%	ICU Level of Service	A
Analysis Period (min)	15		

c Critical Lane Group

Movement	EBL	EBT	EBR	WBL	WBT	WBR	NBL	NBT	NBR	SBL	SBT	SBR
Lane Configurations												
Ideal Flow (vphpl)	1700	1800	1800	1700	1800	1800	1700	1800	1800	1700	1800	1800
Total Lost time (s)	4.0	4.0	4.0	4.0	4.0		4.0	4.0		4.0	4.0	4.0
Lane Util. Factor	1.00	*1.00	1.00	1.00	*1.00		1.00	*1.00		1.00	*1.00	1.00
Frt	1.00	1.00	1.00	1.00	1.00		1.00	1.00		1.00	1.00	1.00
Flt Protected	1.00	1.00	1.00	1.00	1.00		1.00	1.00		1.00	1.00	1.00
Satd. Flow (prot)	1700	3600	1800	1700	3600		1700	3600		1700	3600	1800
Flt Permitted	1.00	1.00	1.00	1.00	1.00		1.00	1.00		1.00	1.00	1.00
Satd. Flow (perm)	1700	3600	1800	1700	3600		1700	3600		1700	3600	1800
Volume (vph)	63	485	241	75	876	40	434	304	54	35	206	134
Peak-hour factor, PHF	0.83	0.83	0.83	0.83	0.83	0.83	0.83	0.83	0.83	0.83	0.83	0.83
Adj. Flow (vph)	76	584	290	90	1055	48	523	366	65	42	248	161
RTOR Reduction (vph)	0	0	201	0	5	0	0	21	0	0	0	127
Lane Group Flow (vph)	76	584	89	90	1098	0	523	410	0	42	248	34
Turn Type	Prot		Perm	Prot			pm+pt			pm+pt		Perm
Protected Phases	7	4		3	8		5	2		1	6	
Permitted Phases			4				2			6		6
Actuated Green, G (s)	6.0	23.0	23.0	9.0	26.0		31.0	21.0		22.0	16.0	16.0
Effective Green, g (s)	6.0	23.0	23.0	9.0	26.0		31.0	21.0		22.0	16.0	16.0
Actuated g/C Ratio	0.08	0.31	0.31	0.12	0.35		0.41	0.28		0.29	0.21	0.21
Clearance Time (s)	4.0	4.0	4.0	4.0	4.0		4.0	4.0		4.0	4.0	4.0
Lane Grp Cap (vph)	136	1104	552	204	1248		703	1008		499	768	384
v/s Ratio Prot	c0.04	0.16		0.05	c0.31		c0.11	0.11		0.01	0.07	
v/s Ratio Perm			0.05				0.20			0.02		0.02
v/c Ratio	0.56	0.53	0.16	0.44	0.88		0.74	0.41		0.08	0.32	0.09
Uniform Delay, d1	33.2	21.5	19.0	30.7	23.0		20.0	21.9		19.2	24.9	23.7
Progression Factor	1.00	1.00	1.00	0.70	0.86		1.00	1.00		1.00	1.00	1.00
Incremental Delay, d2	15.5	1.8	0.6	5.7	7.7		7.0	1.2		0.3	1.1	0.5
Delay (s)	48.8	23.3	19.6	27.1	27.5		27.0	23.2		19.5	26.0	24.1
Level of Service	D	C	B	C	C		C	C		B	C	C
Approach Delay (s)		24.2			27.5			25.3			24.7	
Approach LOS		C			C			C			C	

Intersection Summary			
HCM Average Control Delay	25.7	HCM Level of Service	C
HCM Volume to Capacity ratio	0.78		
Actuated Cycle Length (s)	75.0	Sum of lost time (s)	12.0
Intersection Capacity Utilization	77.0%	ICU Level of Service	D
Analysis Period (min)	15		

c Critical Lane Group

Movement	EBL	EBT	EBR	WBL	WBT	WBR	NBL	NBT	NBR	SBL	SBT	SBR
Lane Configurations												
Ideal Flow (vphpl)	1700	1800	1800	1700	1800	1800	1700	1800	1800	1700	1800	1800
Total Lost time (s)	4.0	4.0	4.0	4.0	4.0			4.0		4.0	4.0	
Lane Util. Factor	1.00	1.00	1.00	1.00	1.00			1.00		1.00	1.00	
Frt	1.00	1.00	1.00	1.00	1.00			1.00		1.00	1.00	
Flt Protected	1.00	1.00	1.00	1.00	1.00			1.00		1.00	1.00	
Satd. Flow (prot)	1700	1800	1800	1700	1800			1800		1700	1800	
Flt Permitted	1.00	1.00	1.00	1.00	1.00			1.00		1.00	1.00	
Satd. Flow (perm)	1700	1800	1800	1700	1800			1800		1700	1800	
Volume (vph)	43	381	44	25	587	39	59	0	77	26	0	84
Peak-hour factor, PHF	0.90	0.90	0.95	0.95	0.90	0.90	0.95	0.95	0.95	0.90	0.95	0.90
Adj. Flow (vph)	48	423	46	26	652	43	62	0	81	29	0	93
RTOR Reduction (vph)	0	0	17	0	3	0	0	59	0	0	68	0
Lane Group Flow (vph)	48	423	29	26	692	0	0	84	0	29	25	0
Turn Type	Perm		Perm	Perm			Perm			Perm		
Protected Phases		4			8			2			6	
Permitted Phases	4		4	8			2			6		
Actuated Green, G (s)	47.0	47.0	47.0	47.0	47.0			20.0		20.0	20.0	
Effective Green, g (s)	47.0	47.0	47.0	47.0	47.0			20.0		20.0	20.0	
Actuated g/C Ratio	0.63	0.63	0.63	0.63	0.63			0.27		0.27	0.27	
Clearance Time (s)	4.0	4.0	4.0	4.0	4.0			4.0		4.0	4.0	
Lane Grp Cap (vph)	1065	1128	1128	1065	1128			480		453	480	
v/s Ratio Prot		0.23			c0.38						0.01	
v/s Ratio Perm	0.03		0.02	0.02				0.05		0.02		
v/c Ratio	0.05	0.38	0.03	0.02	0.61			0.17		0.06	0.05	
Uniform Delay, d1	5.4	6.8	5.3	5.3	8.5			21.1		20.5	20.4	
Progression Factor	0.72	0.75	0.68	0.26	0.93			1.00		1.00	1.00	
Incremental Delay, d2	0.1	0.9	0.0	0.0	2.1			0.8		0.3	0.2	
Delay (s)	4.0	6.0	3.6	1.4	10.0			21.9		20.8	20.7	
Level of Service	A	A	A	A	B			C		C	C	
Approach Delay (s)		5.6			9.7			21.9			20.7	
Approach LOS		A			A			C			C	

Intersection Summary			
HCM Average Control Delay	10.4	HCM Level of Service	B
HCM Volume to Capacity ratio	0.48		
Actuated Cycle Length (s)	75.0	Sum of lost time (s)	8.0
Intersection Capacity Utilization	61.7%	ICU Level of Service	B
Analysis Period (min)	15		

c Critical Lane Group

Movement	EBL	EBT	EBR	WBL	WBT	WBR	NBL	NBT	NBR	SBL	SBT	SBR
Lane Configurations												
Ideal Flow (vphpl)	1700	1800	1800	1700	1800	1800	1700	1800	1800	1700	1800	1800
Total Lost time (s)	4.0	4.0		4.0	4.0		4.0	4.0		4.0	4.0	
Lane Util. Factor	1.00	*1.00		1.00	*1.00		1.00	1.00		1.00	1.00	
Frt	1.00	1.00		1.00	1.00		1.00	1.00		1.00	1.00	
Flt Protected	1.00	1.00		1.00	1.00		1.00	1.00		1.00	1.00	
Satd. Flow (prot)	1700	3600		1700	3600		1700	1800		1700	1800	
Flt Permitted	1.00	1.00		1.00	1.00		1.00	1.00		1.00	1.00	
Satd. Flow (perm)	1700	3600		1700	3600		1700	1800		1700	1800	
Volume (vph)	31	490	55	77	838	65	109	405	72	31	342	49
Peak-hour factor, PHF	0.89	0.89	0.89	0.89	0.89	0.89	0.89	0.89	0.89	0.89	0.89	0.89
Adj. Flow (vph)	35	551	62	87	942	73	122	455	81	35	384	55
RTOR Reduction (vph)	0	12	0	0	8	0	0	9	0	0	7	0
Lane Group Flow (vph)	35	601	0	87	1007	0	122	527	0	35	432	0
Turn Type	Perm			Perm			Perm			Perm		
Protected Phases		4			8			2			6	
Permitted Phases	4			8			2			6		
Actuated Green, G (s)	32.0	32.0		32.0	32.0		35.0	35.0		35.0	35.0	
Effective Green, g (s)	32.0	32.0		32.0	32.0		35.0	35.0		35.0	35.0	
Actuated g/C Ratio	0.43	0.43		0.43	0.43		0.47	0.47		0.47	0.47	
Clearance Time (s)	4.0	4.0		4.0	4.0		4.0	4.0		4.0	4.0	
Lane Grp Cap (vph)	725	1536		725	1536		793	840		793	840	
v/s Ratio Prot		0.17			c0.28			c0.29			0.24	
v/s Ratio Perm	0.02			0.05			0.07			0.02		
v/c Ratio	0.05	0.39		0.12	0.66		0.15	0.63		0.04	0.51	
Uniform Delay, d1	12.6	14.8		13.0	17.1		11.5	15.1		10.9	14.0	
Progression Factor	1.86	1.98		1.00	1.00		0.81	0.66		1.00	1.00	
Incremental Delay, d2	0.1	0.7		0.3	2.2		0.3	2.8		0.1	2.2	
Delay (s)	23.5	29.9		13.3	19.3		9.7	12.8		11.0	16.3	
Level of Service	C	C		B	B		A	B		B	B	
Approach Delay (s)		29.6			18.8			12.2			15.9	
Approach LOS		C			B			B			B	

Intersection Summary			
HCM Average Control Delay	19.2	HCM Level of Service	B
HCM Volume to Capacity ratio	0.64		
Actuated Cycle Length (s)	75.0	Sum of lost time (s)	8.0
Intersection Capacity Utilization	73.7%	ICU Level of Service	D
Analysis Period (min)	15		

c Critical Lane Group

Movement	EBL	EBT	EBR	WBL	WBT	WBR	NBL	NBT	NBR	SBL	SBT	SBR
Lane Configurations												
Ideal Flow (vphpl)	1700	1800	1800	1700	1800	1800	1700	1800	1800	1700	1800	1800
Total Lost time (s)	4.0	4.0		4.0	4.0		4.0	4.0		4.0	4.0	
Lane Util. Factor	1.00	*1.00		1.00	*1.00		1.00	1.00		1.00	1.00	
Frt	1.00	1.00		1.00	1.00		1.00	1.00		1.00	1.00	
Flt Protected	1.00	1.00		1.00	1.00		1.00	1.00		1.00	1.00	
Satd. Flow (prot)	1700	3600		1700	3600		1700	1800		1700	1800	
Flt Permitted	1.00	1.00		1.00	1.00		1.00	1.00		1.00	1.00	
Satd. Flow (perm)	1700	3600		1700	3600		1700	1800		1700	1800	
Volume (vph)	9	86	52	53	185	14	63	566	26	12	440	39
Peak-hour factor, PHF	0.92	0.92	0.92	0.92	0.92	0.92	0.92	0.92	0.92	0.92	0.92	0.92
Adj. Flow (vph)	10	93	57	58	201	15	68	615	28	13	478	42
RTOR Reduction (vph)	0	45	0	0	8	0	0	2	0	0	4	0
Lane Group Flow (vph)	10	105	0	58	208	0	68	641	0	13	516	0
Turn Type	pm+pt			pm+pt			pm+pt			Perm		
Protected Phases	7	4		3	8		5	2			6	
Permitted Phases	4			8			2			6		
Actuated Green, G (s)	22.0	16.0		22.0	16.0		41.0	41.0		31.0	31.0	
Effective Green, g (s)	22.0	16.0		22.0	16.0		41.0	41.0		31.0	31.0	
Actuated g/C Ratio	0.29	0.21		0.29	0.21		0.55	0.55		0.41	0.41	
Clearance Time (s)	4.0	4.0		4.0	4.0		4.0	4.0		4.0	4.0	
Lane Grp Cap (vph)	589	768		589	768		929	984		703	744	
v/s Ratio Prot	0.00	0.03		c0.01	c0.06		0.01	c0.36			0.29	
v/s Ratio Perm	0.00			0.03			0.03			0.01		
v/c Ratio	0.02	0.14		0.10	0.27		0.07	0.65		0.02	0.69	
Uniform Delay, d1	18.8	23.9		19.4	24.6		10.2	12.0		13.0	18.1	
Progression Factor	1.00	1.00		1.00	1.00		1.01	0.79		0.95	0.76	
Incremental Delay, d2	0.1	0.4		0.3	0.9		0.1	2.2		0.0	4.8	
Delay (s)	18.9	24.3		19.7	25.5		10.4	11.6		12.3	18.6	
Level of Service	B	C		B	C		B	B		B	B	
Approach Delay (s)		23.9			24.3			11.5			18.5	
Approach LOS		C			C			B			B	

Intersection Summary			
HCM Average Control Delay	17.0	HCM Level of Service	B
HCM Volume to Capacity ratio	0.50		
Actuated Cycle Length (s)	75.0	Sum of lost time (s)	12.0
Intersection Capacity Utilization	59.0%	ICU Level of Service	B
Analysis Period (min)	15		

c Critical Lane Group

Movement	EBL	EBT	EBR	EBR2	WBL2	WBL	WBT	WBR	NBL2	NBL	NBT	NBR
Lane Configurations												
Ideal Flow (vphpl)	1700	1800	1800	1800	1600	1600	1800	1800	1700	1700	1800	1800
Total Lost time (s)	4.0	4.0	4.0			4.0	4.0			4.0	4.0	4.0
Lane Util. Factor	1.00	*1.00	*1.00			*1.00	*1.00			*1.00	*1.00	1.00
Frt	1.00	1.00	1.00			1.00	1.00			1.00	1.00	1.00
Flt Protected	1.00	1.00	1.00			1.00	1.00			1.00	1.00	1.00
Satd. Flow (prot)	1700	3600	1800			3200	3600			1700	3600	1800
Flt Permitted	1.00	1.00	1.00			1.00	1.00			1.00	1.00	1.00
Satd. Flow (perm)	1700	3600	1800			3200	3600			1700	3600	1800
Volume (vph)	111	332	81	6	81	257	458	40	39	159	543	108
Peak-hour factor, PHF	0.93	0.93	0.93	0.93	0.93	0.93	0.93	0.93	0.93	0.93	0.93	0.93
Adj. Flow (vph)	119	357	87	6	87	276	492	43	42	171	584	116
RTOR Reduction (vph)	0	0	2	0	0	0	8	0	0	0	0	80
Lane Group Flow (vph)	119	357	91	0	0	363	527	0	0	124	673	36
Turn Type	Prot		Perm		Prot	Prot			Prot	Prot		Perm
Protected Phases	5	2			1	1	6		3	3	8	
Permitted Phases			2									8
Actuated Green, G (s)	9.0	16.0	16.0			13.0	20.0			9.0	37.0	28.0
Effective Green, g (s)	9.0	16.0	16.0			13.0	20.0			9.0	37.0	28.0
Actuated g/C Ratio	0.10	0.18	0.18			0.14	0.22			0.10	0.41	0.31
Clearance Time (s)	4.0	4.0	4.0			4.0	4.0			4.0	4.0	4.0
Lane Grp Cap (vph)	170	640	320			462	800			170	1480	560
v/s Ratio Prot	0.07	0.10				c0.11	c0.15			c0.07	c0.05	
v/s Ratio Perm			0.05								0.14	0.02
v/c Ratio	0.70	0.56	0.28			0.79	0.66			0.73	0.45	0.06
Uniform Delay, d1	39.2	33.8	32.0			37.2	31.9			39.3	19.2	21.8
Progression Factor	1.00	1.00	1.00			1.00	1.00			1.00	1.00	1.00
Incremental Delay, d2	21.3	3.5	2.2			12.6	4.2			23.9	1.0	0.2
Delay (s)	60.5	37.3	34.2			49.8	36.1			63.2	20.2	22.0
Level of Service	E	D	C			D	D			E	C	C
Approach Delay (s)		41.6					41.6				26.3	
Approach LOS		D					D				C	

Intersection Summary			
HCM Average Control Delay	39.2	HCM Level of Service	D
HCM Volume to Capacity ratio	0.81		
Actuated Cycle Length (s)	90.0	Sum of lost time (s)	24.0
Intersection Capacity Utilization	87.4%	ICU Level of Service	E
Analysis Period (min)	15		

c Critical Lane Group

Movement	SBL	SBT	SBR	SBR2	NEL2	NEL	NER	NER2
Lane Configurations								
Ideal Flow (vphpl)	1700	1800	1800	1800	1600	1600	1800	1800
Total Lost time (s)	4.0	4.0	4.0			4.0	4.0	
Lane Util. Factor	1.00	*1.00	*1.00			*1.00	*1.00	
Frt	1.00	1.00	1.00			1.00	1.00	
Flt Protected	1.00	1.00	1.00			1.00	1.00	
Satd. Flow (prot)	1700	1800	1800			3200	3600	
Flt Permitted	1.00	1.00	1.00			1.00	1.00	
Satd. Flow (perm)	1700	1800	1800			3200	3600	
Volume (vph)	63	377	112	83	15	145	179	45
Peak-hour factor, PHF	0.93	0.93	0.93	0.93	0.93	0.93	0.93	0.93
Adj. Flow (vph)	68	405	120	89	16	156	192	48
RTOR Reduction (vph)	0	0	30	0	0	0	27	0
Lane Group Flow (vph)	68	405	179	0	0	172	213	0
Turn Type	Prot		Perm		Split		Perm	
Protected Phases	7	4			9	9		
Permitted Phases			4				9	
Actuated Green, G (s)	6.0	25.0	25.0			7.0	7.0	
Effective Green, g (s)	6.0	25.0	25.0			7.0	7.0	
Actuated g/C Ratio	0.07	0.28	0.28			0.08	0.08	
Clearance Time (s)	4.0	4.0	4.0			4.0	4.0	
Lane Grp Cap (vph)	113	500	500			249	280	
v/s Ratio Prot	0.04	c0.23				0.05		
v/s Ratio Perm			0.10				c0.06	
v/c Ratio	0.60	0.81	0.36			0.69	0.76	
Uniform Delay, d1	40.8	30.3	26.1			40.4	40.7	
Progression Factor	1.00	1.00	1.00			1.00	1.00	
Incremental Delay, d2	21.5	13.3	2.0			14.6	17.6	
Delay (s)	62.3	43.6	28.1			55.1	58.3	
Level of Service	E	D	C			E	E	
Approach Delay (s)		40.7				57.0		
Approach LOS		D				E		

Intersection Summary

FORECAST YEAR (2035) NO PROJECT CONDITIONS

AM PEAK HOUR

Movement	EBL	EBT	EBR	WBL	WBT	WBR	NBL	NBT	NBR	SBL	SBT	SBR
Lane Configurations												
Sign Control		Free			Free			Stop			Stop	
Grade		0%			0%			0%			0%	
Volume (veh/h)	1	190	1	41	78	1	11	9	27	0	0	0
Peak Hour Factor	0.95	0.95	0.95	0.95	0.95	0.95	0.95	0.95	0.95	0.95	0.95	0.95
Hourly flow rate (vph)	1	200	1	43	82	1	12	9	28	0	0	0
Pedestrians												
Lane Width (ft)												
Walking Speed (ft/s)												
Percent Blockage												
Right turn flare (veh)												
Median type								None			None	
Median storage veh)												
Upstream signal (ft)												
pX, platoon unblocked												
vC, conflicting volume	83			201			371	372	100	304	372	83
vC1, stage 1 conf vol												
vC2, stage 2 conf vol												
vCu, unblocked vol	83			201			371	372	100	304	372	83
tC, single (s)	4.1			4.1			7.5	6.5	6.9	7.5	6.5	6.9
tC, 2 stage (s)												
tF (s)	2.2			2.2			3.5	4.0	3.3	3.5	4.0	3.3
p0 queue free %	100			97			98	98	97	100	100	100
cM capacity (veh/h)	1527			1383			552	544	943	589	543	967

Direction, Lane #	EB 1	EB 2	EB 3	WB 1	NB 1
Volume Total	68	133	1	126	49
Volume Left	1	0	0	43	12
Volume Right	0	0	1	1	28
cSH	1527	1700	1700	1383	722
Volume to Capacity	0.00	0.08	0.00	0.03	0.07
Queue Length 95th (ft)	0	0	0	2	6
Control Delay (s)	0.1	0.0	0.0	2.8	10.4
Lane LOS	A			A	B
Approach Delay (s)	0.0			2.8	10.4
Approach LOS					B

Intersection Summary			
Average Delay	2.3		
Intersection Capacity Utilization	25.0%	ICU Level of Service	A
Analysis Period (min)	15		

Year 2035 No Build AM Peak Hour
City of San Bernardino
Redlands First Mile

Level Of Service Computation Report
2000 HCM 4-Way Stop Method (Base Volume Alternative)

Intersection #2 K St and 2nd St

Cycle (sec):	100	Critical Vol./Cap.(X):	0.343
Loss Time (sec):	0 (Y+R=4.0 sec)	Average Delay (sec/veh):	10.0
Optimal Cycle:	0	Level Of Service:	B

Street Name:	K St						2nd St					
Approach:	North Bound			South Bound			East Bound			West Bound		
Movement:	L - T - R			L - T - R			L - T - R			L - T - R		
Control:	Stop Sign			Stop Sign			Stop Sign			Stop Sign		
Rights:	Include			Include			Include			Include		
Min. Green:	0	0	0	0	0	0	0	0	0	0	0	0
Lanes:	0 0	1! 0	0	0 0	1! 0	0	1 0	1 1	0	1 0	1 1	0
Volume Module:												
Base Vol:	23	5	60	11	33	16	12	416	20	50	270	28
Growth Adj:	1.00	1.00	1.00	1.00	1.00	1.00	1.00	1.00	1.00	1.00	1.00	1.00
Initial Bse:	23	5	60	11	33	16	12	416	20	50	270	28
User Adj:	1.00	1.00	1.00	1.00	1.00	1.00	1.00	1.00	1.00	1.00	1.00	1.00
PHF Adj:	0.95	0.95	0.95	0.95	0.95	0.95	0.95	0.95	0.95	0.95	0.95	0.95
PHF Volume:	24	5	63	12	35	17	13	438	21	53	284	29
Reduct Vol:	0	0	0	0	0	0	0	0	0	0	0	0
Reduced Vol:	24	5	63	12	35	17	13	438	21	53	284	29
PCE Adj:	1.00	1.00	1.00	1.00	1.00	1.00	1.00	1.00	1.00	1.00	1.00	1.00
MLF Adj:	1.00	1.00	1.00	1.00	1.00	1.00	1.00	1.00	1.00	1.00	1.00	1.00
FinalVolume:	24	5	63	12	35	17	13	438	21	53	284	29
Saturation Flow Module:												
Adjustment:	1.00	1.00	1.00	1.00	1.00	1.00	1.00	1.00	1.00	1.00	1.00	1.00
Lanes:	0.26	0.06	0.68	0.18	0.55	0.27	1.00	1.91	0.09	1.00	1.81	0.19
Final Sat.:	161	35	420	107	320	155	607	1276	62	594	1188	125
Capacity Analysis Module:												
Vol/Sat:	0.15	0.15	0.15	0.11	0.11	0.11	0.02	0.34	0.34	0.09	0.24	0.24
Crit Moves:		****		****				****			****	
Delay/Veh:	9.2	9.2	9.2	9.3	9.3	9.3	8.6	10.6	10.6	9.2	9.7	9.5
Delay Adj:	1.00	1.00	1.00	1.00	1.00	1.00	1.00	1.00	1.00	1.00	1.00	1.00
AdjDel/Veh:	9.2	9.2	9.2	9.3	9.3	9.3	8.6	10.6	10.6	9.2	9.7	9.5
LOS by Move:	A	A	A	A	A	A	A	B	B	A	A	A
ApproachDel:	9.2			9.3			10.6			9.6		
Delay Adj:	1.00			1.00			1.00			1.00		
ApprAdjDel:	9.2			9.3			10.6			9.6		
LOS by Appr:	A			A			B			A		
AllWayAvgQ:	0.1	0.1	0.1	0.1	0.1	0.1	0.0	0.5	0.5	0.1	0.3	0.3

Note: Queue reported is the number of cars per lane.

Movement	EBL	EBT	EBR	WBL	WBT	WBR	NBL	NBT	NBR	SBL	SBT	SBR
Lane Configurations												
Ideal Flow (vphpl)	1900	1900	1900	1900	1900	1900	1900	1900	1900	1900	1900	1900
Total Lost time (s)		4.0			4.0			4.0	4.0		4.0	4.0
Lane Util. Factor		*1.00			*1.00			1.00	1.00		1.00	1.00
Frt		1.00			1.00			1.00	1.00		1.00	1.00
Flt Protected		1.00			1.00			1.00	1.00		1.00	1.00
Satd. Flow (prot)		3800			3800			1900	1900		1900	1900
Flt Permitted		1.00			1.00			1.00	1.00		1.00	1.00
Satd. Flow (perm)		3800			3800			1900	1900		1900	1900
Volume (vph)	33	531	67	153	205	2	49	53	134	5	60	38
Peak-hour factor, PHF	0.95	0.95	0.95	0.95	0.95	0.95	0.95	0.95	0.95	0.95	0.95	0.95
Adj. Flow (vph)	35	559	71	161	216	2	52	56	141	5	63	40
RTOR Reduction (vph)	0	13	0	0	1	0	0	0	107	0	0	31
Lane Group Flow (vph)	0	652	0	0	378	0	0	108	34	0	68	9
Turn Type	Perm			Perm			Split		Perm	Split		Perm
Protected Phases		4			8		2	2		6	6	
Permitted Phases	4			8					2			6
Actuated Green, G (s)		29.0			29.0			18.0	18.0		16.0	16.0
Effective Green, g (s)		29.0			29.0			18.0	18.0		16.0	16.0
Actuated g/C Ratio		0.39			0.39			0.24	0.24		0.21	0.21
Clearance Time (s)		4.0			4.0			4.0	4.0		4.0	4.0
Lane Grp Cap (vph)		1469			1469			456	456		405	405
v/s Ratio Prot								c0.06			c0.04	
v/s Ratio Perm		0.17			0.10				0.02			0.00
v/c Ratio		0.44			0.26			0.24	0.07		0.17	0.02
Uniform Delay, d1		17.0			15.7			23.0	22.1		24.1	23.3
Progression Factor		1.00			0.83			1.00	1.00		1.00	1.00
Incremental Delay, d2		1.0			0.4			1.2	0.3		0.9	0.1
Delay (s)		18.0			13.4			24.2	22.4		25.0	23.4
Level of Service		B			B			C	C		C	C
Approach Delay (s)		18.0			13.4			23.2			24.4	
Approach LOS		B			B			C			C	

Intersection Summary			
HCM Average Control Delay	18.2	HCM Level of Service	B
HCM Volume to Capacity ratio	0.31		
Actuated Cycle Length (s)	75.0	Sum of lost time (s)	12.0
Intersection Capacity Utilization	50.1%	ICU Level of Service	A
Analysis Period (min)	15		

c Critical Lane Group

Movement	EBT	EBR	WBL	WBT	NBL	NBR
Lane Configurations						
Sign Control	Free			Free	Stop	
Grade	0%			0%	0%	
Volume (veh/h)	222	20	12	124	6	6
Peak Hour Factor	0.95	0.95	0.95	0.95	0.95	0.95
Hourly flow rate (vph)	234	21	13	131	6	6
Pedestrians						
Lane Width (ft)						
Walking Speed (ft/s)						
Percent Blockage						
Right turn flare (veh)						
Median type					None	
Median storage veh)						
Upstream signal (ft)				682		
pX, platoon unblocked						
vC, conflicting volume			255		335	127
vC1, stage 1 conf vol						
vC2, stage 2 conf vol						
vCu, unblocked vol			255		335	127
tC, single (s)			4.1		6.8	6.9
tC, 2 stage (s)						
tF (s)			2.2		3.5	3.3
p0 queue free %			99		99	99
cM capacity (veh/h)			1322		634	905

Direction, Lane #	EB 1	EB 2	WB 1	WB 2	NB 1
Volume Total	156	99	56	87	13
Volume Left	0	0	13	0	6
Volume Right	0	21	0	0	6
cSH	1700	1700	1322	1700	746
Volume to Capacity	0.09	0.06	0.01	0.05	0.02
Queue Length 95th (ft)	0	0	1	0	1
Control Delay (s)	0.0	0.0	1.8	0.0	9.9
Lane LOS			A		A
Approach Delay (s)	0.0		0.7		9.9
Approach LOS					A

Intersection Summary			
Average Delay	0.6		
Intersection Capacity Utilization	22.7%	ICU Level of Service	A
Analysis Period (min)	15		

Year 2035 No Build AM Peak Hour
City of San Bernardino
Redlands First Mile

Level Of Service Computation Report
2000 HCM Unsignalized Method (Base Volume Alternative)

Intersection #5 J St and 2nd St

Average Delay (sec/veh): 2.3 Worst Case Level Of Service: C[21.0]

Street Name:	J St						2nd St					
Approach:	North Bound			South Bound			East Bound			West Bound		
Movement:	L	T	R	L	T	R	L	T	R	L	T	R
Control:	Stop Sign			Stop Sign			Uncontrolled			Uncontrolled		
Rights:	Include			Include			Include			Include		
Lanes:	0 0 1! 0 0			0 1 0 0 0			1 0 1 1 0			1 0 1 1 0		
Volume Module:												
Base Vol:	20	1	106	17	10	0	10	509	36	18	354	23
Growth Adj:	1.00	1.00	1.00	1.00	1.00	1.00	1.00	1.00	1.00	1.00	1.00	1.00
Initial Bse:	20	1	106	17	10	0	10	509	36	18	354	23
User Adj:	1.00	1.00	1.00	1.00	1.00	1.00	1.00	1.00	1.00	1.00	1.00	1.00
PHF Adj:	0.95	0.95	0.95	0.95	0.95	0.95	0.95	0.95	0.95	0.95	0.95	0.95
PHF Volume:	21	1	112	18	11	0	11	536	38	19	373	24
Reduct Vol:	0	0	0	0	0	0	0	0	0	0	0	0
FinalVolume:	21	1	112	18	11	0	11	536	38	19	373	24
Critical Gap Module:												
Critical Gp:	7.5	6.5	6.9	7.5	6.5	xxxxx	4.1	xxxx	xxxxx	4.1	xxxx	xxxxx
FollowUpTim:	3.5	4.0	3.3	3.5	4.0	xxxxx	2.2	xxxx	xxxxx	2.2	xxxx	xxxxx
Capacity Module:												
Cnflict Vol:	805	1011	287	712	1017	xxxxx	397	xxxx	xxxxx	574	xxxx	xxxxx
Potent Cap.:	277	242	716	323	239	xxxxx	1173	xxxx	xxxxx	1009	xxxx	xxxxx
Move Cap.:	262	235	716	266	233	xxxxx	1173	xxxx	xxxxx	1009	xxxx	xxxxx
Volume/Cap:	0.08	0.00	0.16	0.07	0.05	xxxx	0.01	xxxx	xxxx	0.02	xxxx	xxxx
Level Of Service Module:												
2Way95thQ:	xxxx	xxxx	xxxxx	xxxx	xxxx	xxxxx	0.0	xxxx	xxxxx	0.1	xxxx	xxxxx
Control Del:	xxxxx	xxxx	xxxxx	xxxxx	xxxx	xxxxx	8.1	xxxx	xxxxx	8.6	xxxx	xxxxx
LOS by Move:	*	*	*	*	*	*	A	*	*	A	*	*
Movement:	LT	LTR	RT	LT	LTR	RT	LT	LTR	RT	LT	LTR	RT
Shared Cap.:	xxxx	555	xxxxx	253	xxxx	xxxxx	xxxx	xxxx	xxxxx	xxxx	xxxx	xxxxx
SharedQueue:	xxxxx	0.9	xxxxx	0.4	xxxx	xxxxx	xxxxx	xxxx	xxxxx	xxxxx	xxxx	xxxxx
Shrd ConDel:	xxxxx	13.5	xxxxx	21.0	xxxx	xxxxx	xxxxx	xxxx	xxxxx	xxxxx	xxxx	xxxxx
Shared LOS:	*	B	*	C	*	*	*	*	*	*	*	*
ApproachDel:	13.5			21.0			xxxxxx			xxxxxx		
ApproachLOS:	B			C			*			*		

Note: Queue reported is the number of cars per lane.

Movement	EBL	EBT	EBR	WBL	WBT	WBR	NBL	NBT	NBR	SBL	SBT	SBR
Lane Configurations												
Sign Control		Free			Free			Stop			Stop	
Grade		0%			0%			0%			0%	
Volume (veh/h)	40	674	5	48	368	60	25	9	5	15	2	3
Peak Hour Factor	0.95	0.95	0.95	0.95	0.95	0.95	0.95	0.95	0.95	0.95	0.95	0.95
Hourly flow rate (vph)	42	709	5	51	387	63	26	9	5	16	2	3
Pedestrians												
Lane Width (ft)												
Walking Speed (ft/s)												
Percent Blockage												
Right turn flare (veh)												
Median type								None			None	
Median storage veh)												
Upstream signal (ft)		704			682							
pX, platoon unblocked				0.92			0.92	0.92	0.92	0.92	0.92	
vC, conflicting volume	451			715			1095	1348	357	969	1319	225
vC1, stage 1 conf vol												
vC2, stage 2 conf vol												
vCu, unblocked vol	451			602			1016	1291	213	878	1259	225
tC, single (s)	4.1			4.1			7.5	6.5	6.9	7.5	6.5	6.9
tC, 2 stage (s)												
tF (s)	2.2			2.2			3.5	4.0	3.3	3.5	4.0	3.3
p0 queue free %	96			94			84	93	99	92	99	100
cM capacity (veh/h)	1121			906			164	138	734	197	144	784

Direction, Lane #	EB 1	EB 2	WB 1	WB 2	NB 1	SB 1
Volume Total	397	360	244	257	41	21
Volume Left	42	0	51	0	26	16
Volume Right	0	5	0	63	5	3
cSH	1121	1700	906	1700	174	213
Volume to Capacity	0.04	0.21	0.06	0.15	0.24	0.10
Queue Length 95th (ft)	3	0	4	0	22	8
Control Delay (s)	1.2	0.0	2.4	0.0	32.0	23.7
Lane LOS	A		A		D	C
Approach Delay (s)	0.6		1.2		32.0	23.7
Approach LOS					D	C

Intersection Summary			
Average Delay	2.2		
Intersection Capacity Utilization	46.8%	ICU Level of Service	A
Analysis Period (min)	15		

Movement	EBT	EBR	WBL	WBT	NBL	NBR
Lane Configurations						
Ideal Flow (vphpl)	1900	1900	1900	1900	1800	1900
Total Lost time (s)	4.0			4.0		
Lane Util. Factor	*1.00			*1.00		
Frt	1.00			1.00		
Flt Protected	1.00			1.00		
Satd. Flow (prot)	3800			3800		
Flt Permitted	1.00			1.00		
Satd. Flow (perm)	3800			3800		
Volume (vph)	245	0	0	89	0	0
Peak-hour factor, PHF	0.95	0.95	0.95	0.95	0.95	0.95
Adj. Flow (vph)	258	0	0	94	0	0
RTOR Reduction (vph)	0	0	0	0	0	0
Lane Group Flow (vph)	258	0	0	94	0	0
Turn Type			Perm			Perm
Protected Phases	4			8	2	
Permitted Phases			8			2
Actuated Green, G (s)	36.0			36.0		
Effective Green, g (s)	36.0			36.0		
Actuated g/C Ratio	0.48			0.48		
Clearance Time (s)	4.0			4.0		
Lane Grp Cap (vph)	1824			1824		
v/s Ratio Prot	c0.07			0.02		
v/s Ratio Perm						
v/c Ratio	0.14			0.05		
Uniform Delay, d1	10.9			10.4		
Progression Factor	1.00			1.00		
Incremental Delay, d2	0.2			0.1		
Delay (s)	11.0			10.5		
Level of Service	B			B		
Approach Delay (s)	11.0			10.5	0.0	
Approach LOS	B			B	A	

Intersection Summary			
HCM Average Control Delay	10.9	HCM Level of Service	B
HCM Volume to Capacity ratio	0.14		
Actuated Cycle Length (s)	75.0	Sum of lost time (s)	39.0
Intersection Capacity Utilization	10.1%	ICU Level of Service	A
Analysis Period (min)	15		

c Critical Lane Group

Movement	EBL	EBT	EBR	WBL	WBT	WBR	NBL	NBT	NBR	SBL	SBT	SBR
Lane Configurations												
Ideal Flow (vphpl)	1800	1900	1900	1800	1900	1900	1900	1900	1900	1900	1900	1900
Total Lost time (s)	4.0	4.0		4.0	4.0			4.0	4.0		4.0	
Lane Util. Factor	1.00	*1.00		1.00	*1.00			*1.00	1.00		*1.00	
Frt	1.00	1.00		1.00	1.00			1.00	1.00		1.00	
Flt Protected	1.00	1.00		1.00	1.00			1.00	1.00		1.00	
Satd. Flow (prot)	1800	3800		1800	3800			3800	1900		3800	
Flt Permitted	1.00	1.00		1.00	1.00			1.00	1.00		1.00	
Satd. Flow (perm)	1800	3800		1800	3800			3800	1900		3800	
Volume (vph)	29	623	34	234	348	7	12	31	113	19	16	31
Peak-hour factor, PHF	0.95	0.95	0.95	0.95	0.95	0.95	0.95	0.95	0.95	0.95	0.95	0.95
Adj. Flow (vph)	31	656	36	246	366	7	13	33	119	20	17	33
RTOR Reduction (vph)	0	6	0	0	2	0	0	0	76	0	21	0
Lane Group Flow (vph)	31	686	0	246	371	0	0	46	43	0	49	0
Turn Type	Perm			Perm			Perm		Perm	Perm		
Protected Phases		4			8			2			6	
Permitted Phases	4			8			2		2	6		
Actuated Green, G (s)	40.0	40.0		40.0	40.0			27.0	27.0		27.0	
Effective Green, g (s)	40.0	40.0		40.0	40.0			27.0	27.0		27.0	
Actuated g/C Ratio	0.53	0.53		0.53	0.53			0.36	0.36		0.36	
Clearance Time (s)	4.0	4.0		4.0	4.0			4.0	4.0		4.0	
Lane Grp Cap (vph)	960	2027		960	2027			1368	684		1368	
v/s Ratio Prot		c0.18			0.10							
v/s Ratio Perm	0.02			0.14				0.01	c0.02		0.01	
v/c Ratio	0.03	0.34		0.26	0.18			0.03	0.06		0.04	
Uniform Delay, d1	8.3	10.0		9.5	9.1			15.5	15.7		15.6	
Progression Factor	1.00	1.00		1.02	0.99			0.99	2.14		1.00	
Incremental Delay, d2	0.1	0.5		0.6	0.2			0.0	0.2		0.0	
Delay (s)	8.4	10.4		10.3	9.2			15.4	33.8		15.6	
Level of Service	A	B		B	A			B	C		B	
Approach Delay (s)		10.3			9.6			28.7			15.6	
Approach LOS		B			A			C			B	

Intersection Summary			
HCM Average Control Delay	12.2	HCM Level of Service	B
HCM Volume to Capacity ratio	0.23		
Actuated Cycle Length (s)	75.0	Sum of lost time (s)	8.0
Intersection Capacity Utilization	49.7%	ICU Level of Service	A
Analysis Period (min)	15		

c Critical Lane Group

Movement	EBL	EBT	EBR	WBL	WBT	WBR	NBL	NBT	NBR	SBL	SBT	SBR
Lane Configurations												
Ideal Flow (vphpl)	1900	1900	1900	1900	1900	1900	1900	1900	1900	1900	1900	1900
Total Lost time (s)		4.0			4.0			4.0			4.0	
Lane Util. Factor		*1.00			*1.00			*1.00			*1.00	
Frt		1.00			1.00			1.00			1.00	
Flt Protected		1.00			1.00			1.00			1.00	
Satd. Flow (prot)		3800			3800			3800			3800	
Flt Permitted		1.00			1.00			1.00			1.00	
Satd. Flow (perm)		3800			3800			3800			3800	
Volume (vph)	110	522	25	39	289	16	12	69	67	124	131	144
Peak-hour factor, PHF	0.95	0.95	0.95	0.95	0.95	0.95	0.95	0.95	0.95	0.95	0.95	0.95
Adj. Flow (vph)	116	549	26	41	304	17	13	73	71	131	138	152
RTOR Reduction (vph)	0	4	0	0	5	0	0	44	0	0	93	0
Lane Group Flow (vph)	0	687	0	0	357	0	0	113	0	0	328	0
Turn Type	Perm			Perm			Perm			Perm		
Protected Phases		4			8			2			6	
Permitted Phases	4			8			2			6		
Actuated Green, G (s)		38.0			38.0			29.0			29.0	
Effective Green, g (s)		38.0			38.0			29.0			29.0	
Actuated g/C Ratio		0.51			0.51			0.39			0.39	
Clearance Time (s)		4.0			4.0			4.0			4.0	
Lane Grp Cap (vph)		1925			1925			1469			1469	
v/s Ratio Prot												
v/s Ratio Perm		0.18			0.09			0.03			0.09	
v/c Ratio		0.36			0.19			0.08			0.22	
Uniform Delay, d1		11.1			10.1			14.5			15.4	
Progression Factor		2.31			0.90			1.00			1.36	
Incremental Delay, d2		0.5			0.2			0.1			0.3	
Delay (s)		26.2			9.3			14.6			21.3	
Level of Service		C			A			B			C	
Approach Delay (s)		26.2			9.3			14.6			21.3	
Approach LOS		C			A			B			C	

Intersection Summary			
HCM Average Control Delay	20.1	HCM Level of Service	C
HCM Volume to Capacity ratio	0.30		
Actuated Cycle Length (s)	75.0	Sum of lost time (s)	8.0
Intersection Capacity Utilization	57.6%	ICU Level of Service	B
Analysis Period (min)	15		

c Critical Lane Group

Movement	EBL	EBT	EBR	WBL	WBT	WBR	NBL	NBT	NBR	SBL	SBT	SBR
Lane Configurations												
Ideal Flow (vphpl)	1900	1900	1900	1800	1900	1900	1900	1900	1900	1900	1900	1800
Total Lost time (s)		4.0		4.0	4.0						4.0	4.0
Lane Util. Factor		*1.00		1.00	*1.00						*1.00	*1.00
Frt		1.00		1.00	1.00						1.00	1.00
Flt Protected		1.00		1.00	1.00						1.00	1.00
Satd. Flow (prot)		3800		1800	3800						3800	3600
Flt Permitted		1.00		1.00	1.00						1.00	1.00
Satd. Flow (perm)		3800		1800	3800						3800	3600
Volume (vph)	0	235	10	167	72	0	0	0	0	563	417	18
Peak-hour factor, PHF	0.95	0.95	0.95	0.95	0.95	0.95	0.95	0.95	0.95	0.95	0.95	0.95
Adj. Flow (vph)	0	247	11	176	76	0	0	0	0	593	439	19
RTOR Reduction (vph)	0	4	0	0	0	0	0	0	0	0	0	11
Lane Group Flow (vph)	0	254	0	176	76	0	0	0	0	0	1032	8
Turn Type				Prot						Split		Perm
Protected Phases		4		3	8					6	6	
Permitted Phases												6
Actuated Green, G (s)		17.0		23.0	44.0						38.0	38.0
Effective Green, g (s)		17.0		23.0	44.0						38.0	38.0
Actuated g/C Ratio		0.19		0.26	0.49						0.42	0.42
Clearance Time (s)		4.0		4.0	4.0						4.0	4.0
Lane Grp Cap (vph)		718		460	1858						1604	1520
v/s Ratio Prot		c0.07		c0.10	0.02						c0.27	
v/s Ratio Perm												0.00
v/c Ratio		0.35		0.38	0.04						0.64	0.01
Uniform Delay, d1		31.7		27.6	12.0						20.6	15.1
Progression Factor		1.00		2.21	0.30						1.00	1.00
Incremental Delay, d2		1.4		2.4	0.0						2.0	0.0
Delay (s)		33.1		63.5	3.6						22.6	15.1
Level of Service		C		E	A						C	B
Approach Delay (s)		33.1			45.4			0.0			22.5	
Approach LOS		C			D			A			C	

Intersection Summary			
HCM Average Control Delay	27.9	HCM Level of Service	C
HCM Volume to Capacity ratio	0.50		
Actuated Cycle Length (s)	90.0	Sum of lost time (s)	12.0
Intersection Capacity Utilization	54.6%	ICU Level of Service	A
Analysis Period (min)	15		

c Critical Lane Group

Movement	EBL	EBT	EBR	WBL	WBT	WBR	NBL	NBT	NBR	SBL	SBT	SBR
Lane Configurations												
Ideal Flow (vphpl)	1900	1900	1900	1700	1900	1900	1900	1900	1900	1800	1900	1900
Total Lost time (s)		4.0	4.0	4.0	4.0					4.0	4.0	4.0
Lane Util. Factor		*1.00	1.00	*1.00	*1.00					*1.00	*1.00	*1.00
Frt		1.00	1.00	1.00	1.00					1.00	0.89	1.00
Flt Protected		1.00	1.00	1.00	1.00					1.00	1.00	1.00
Satd. Flow (prot)		5700	1900	3400	3800					1800	1686	1900
Flt Permitted		1.00	1.00	1.00	1.00					1.00	1.00	1.00
Satd. Flow (perm)		5700	1900	3400	3800					1800	1686	1900
Volume (vph)	0	719	36	278	210	0	0	0	0	195	12	379
Peak-hour factor, PHF	0.95	0.95	0.95	0.95	0.95	0.95	0.95	0.95	0.95	0.95	0.95	0.95
Adj. Flow (vph)	0	757	38	293	221	0	0	0	0	205	13	399
RTOR Reduction (vph)	0	0	26	0	0	0	0	0	0	0	118	169
Lane Group Flow (vph)	0	757	12	293	221	0	0	0	0	164	100	66
Turn Type			Perm	Prot						Split		Perm
Protected Phases		4		3	8					6	6	
Permitted Phases			4									6
Actuated Green, G (s)		23.0	23.0	19.0	46.0					21.0	21.0	21.0
Effective Green, g (s)		23.0	23.0	19.0	46.0					21.0	21.0	21.0
Actuated g/C Ratio		0.31	0.31	0.25	0.61					0.28	0.28	0.28
Clearance Time (s)		4.0	4.0	4.0	4.0					4.0	4.0	4.0
Lane Grp Cap (vph)		1748	583	861	2331					504	472	532
v/s Ratio Prot		c0.13		c0.09	0.06					c0.09	0.06	
v/s Ratio Perm			0.01									0.03
v/c Ratio		0.43	0.02	0.34	0.09					0.33	0.21	0.12
Uniform Delay, d1		20.8	18.1	22.9	6.0					21.4	20.7	20.1
Progression Factor		0.67	0.52	1.00	1.00					1.00	1.00	1.00
Incremental Delay, d2		0.8	0.1	1.1	0.1					1.7	1.0	0.5
Delay (s)		14.6	9.4	24.0	6.0					23.1	21.7	20.6
Level of Service		B	A	C	A					C	C	C
Approach Delay (s)		14.4			16.2			0.0			21.7	
Approach LOS		B			B			A			C	

Intersection Summary			
HCM Average Control Delay	17.2	HCM Level of Service	B
HCM Volume to Capacity ratio	0.37		
Actuated Cycle Length (s)	75.0	Sum of lost time (s)	12.0
Intersection Capacity Utilization	74.8%	ICU Level of Service	D
Analysis Period (min)	15		

c Critical Lane Group

Movement	EBL	EBT	EBR	WBL	WBT	WBR	NBL	NBT	NBR	SBL	SBT	SBR
Lane Configurations												
Ideal Flow (vphpl)	1800	1900	1900	1900	1900	1900	1900	1900	1900	1900	1900	1900
Total Lost time (s)	4.0	4.0			4.0	4.0		4.0				
Lane Util. Factor	1.00	*1.00			*1.00	1.00		*1.00				
Frt	1.00	1.00			1.00	1.00		1.00				
Flt Protected	1.00	1.00			1.00	1.00		1.00				
Satd. Flow (prot)	1800	3800			5700	1900		3799				
Flt Permitted	1.00	1.00			1.00	1.00		1.00				
Satd. Flow (perm)	1800	3800			5700	1900		3799				
Volume (vph)	242	558	0	0	236	154	2	278	29	0	0	0
Peak-hour factor, PHF	0.95	0.95	0.95	0.95	0.95	0.95	0.95	0.95	0.95	0.95	0.95	0.95
Adj. Flow (vph)	255	587	0	0	248	162	2	293	31	0	0	0
RTOR Reduction (vph)	0	0	0	0	0	121	0	10	0	0	0	0
Lane Group Flow (vph)	255	587	0	0	248	41	0	316	0	0	0	0
Turn Type	Prot					Perm	Split					
Protected Phases	7	4			8		2	2				
Permitted Phases						8						
Actuated Green, G (s)	32.0	59.0			23.0	23.0		23.0				
Effective Green, g (s)	32.0	59.0			23.0	23.0		23.0				
Actuated g/C Ratio	0.36	0.66			0.26	0.26		0.26				
Clearance Time (s)	4.0	4.0			4.0	4.0		4.0				
Lane Grp Cap (vph)	640	2491			1457	486		971				
v/s Ratio Prot	c0.14	c0.15			0.04			c0.08				
v/s Ratio Perm						0.02						
v/c Ratio	0.40	0.24			0.17	0.09		0.33				
Uniform Delay, d1	21.8	6.3			26.1	25.5		27.2				
Progression Factor	0.93	1.29			1.00	1.00		1.00				
Incremental Delay, d2	1.6	0.2			0.3	0.3		0.9				
Delay (s)	21.8	8.4			26.3	25.8		28.1				
Level of Service	C	A			C	C		C				
Approach Delay (s)		12.4			26.1			28.1			0.0	
Approach LOS		B			C			C			A	

Intersection Summary			
HCM Average Control Delay	19.2	HCM Level of Service	B
HCM Volume to Capacity ratio	0.32		
Actuated Cycle Length (s)	90.0	Sum of lost time (s)	8.0
Intersection Capacity Utilization	54.2%	ICU Level of Service	A
Analysis Period (min)	15		

c Critical Lane Group

Movement	EBL	EBT	EBR	WBL	WBT	WBR	NBL	NBT	NBR	SBL	SBT	SBR
Lane Configurations												
Ideal Flow (vphpl)	1700	1900	1900	1900	1900	1900	1800	1900	1900	1900	1900	1900
Total Lost time (s)	4.0	4.0			4.0	4.0	4.0	4.0	4.0			
Lane Util. Factor	*1.00	*1.00			*1.00	1.00	*1.00	*1.00	*1.00			
Frt	1.00	1.00			1.00	1.00	1.00	1.00	1.00			
Flt Protected	1.00	1.00			1.00	1.00	1.00	1.00	1.00			
Satd. Flow (prot)	3400	3800			7600	1900	1800	1900	1900			
Flt Permitted	1.00	1.00			1.00	1.00	1.00	1.00	1.00			
Satd. Flow (perm)	3400	3800			7600	1900	1800	1900	1900			
Volume (vph)	115	800	0	0	419	159	81	33	1114	0	0	0
Peak-hour factor, PHF	0.95	0.95	0.95	0.95	0.95	0.95	0.95	0.95	0.95	0.95	0.95	0.95
Adj. Flow (vph)	121	842	0	0	441	167	85	35	1173	0	0	0
RTOR Reduction (vph)	0	0	0	0	0	0	0	37	37	0	0	0
Lane Group Flow (vph)	121	842	0	0	441	167	85	567	567	0	0	0
Turn Type	Prot					Free	Split		Prot			
Protected Phases	7	4			8		2	2	2			
Permitted Phases						Free						
Actuated Green, G (s)	12.0	38.0			22.0	91.0	45.0	45.0	45.0			
Effective Green, g (s)	12.0	38.0			22.0	91.0	45.0	45.0	45.0			
Actuated g/C Ratio	0.13	0.42			0.24	1.00	0.49	0.49	0.49			
Clearance Time (s)	4.0	4.0			4.0		4.0	4.0	4.0			
Lane Grp Cap (vph)	448	1587			1837	1900	890	940	940			
v/s Ratio Prot	0.04	c0.22			0.06		0.05	c0.30	0.30			
v/s Ratio Perm						0.09						
v/c Ratio	0.27	0.53			0.24	0.09	0.10	0.60	0.60			
Uniform Delay, d1	35.6	19.8			27.8	0.0	12.2	16.6	16.6			
Progression Factor	1.00	1.00			1.00	1.00	1.00	1.00	1.00			
Incremental Delay, d2	1.5	1.3			0.3	0.1	0.2	2.9	2.9			
Delay (s)	37.0	21.1			28.1	0.1	12.4	19.4	19.4			
Level of Service	D	C			C	A	B	B	B			
Approach Delay (s)		23.1			20.4			19.0			0.0	
Approach LOS		C			C			B			A	

Intersection Summary			
HCM Average Control Delay	20.7	HCM Level of Service	C
HCM Volume to Capacity ratio	0.57		
Actuated Cycle Length (s)	91.0	Sum of lost time (s)	8.0
Intersection Capacity Utilization	74.8%	ICU Level of Service	D
Analysis Period (min)	15		

c Critical Lane Group

Movement	EBL	EBT	EBR	WBL	WBT	WBR	NBL	NBT	NBR	SBL	SBT	SBR
Lane Configurations												
Ideal Flow (vphpl)	1800	1900	1900	1800	1900	1900	1800	1900	1900	1800	1900	1900
Total Lost time (s)	4.0	4.0		4.0	4.0		4.0	4.0		4.0	4.0	
Lane Util. Factor	1.00	*1.00		1.00	*1.00		1.00	*1.00		1.00	*1.00	
Frt	1.00	1.00		1.00	1.00		1.00	1.00		1.00	1.00	
Flt Protected	1.00	1.00		1.00	1.00		0.95	1.00		1.00	1.00	
Satd. Flow (prot)	1800	3800		1800	3800		1710	3800		1800	3800	
Flt Permitted	1.00	1.00		1.00	1.00		0.40	1.00		1.00	1.00	
Satd. Flow (perm)	1800	3800		1800	3800		711	3800		1800	3800	
Volume (vph)	41	466	174	22	202	2	14	80	214	26	256	202
Peak-hour factor, PHF	0.95	0.95	0.95	0.95	0.95	0.95	0.95	0.95	0.95	0.95	0.95	0.95
Adj. Flow (vph)	43	491	183	23	213	2	15	84	225	27	269	213
RTOR Reduction (vph)	0	57	0	0	1	0	0	159	0	0	151	0
Lane Group Flow (vph)	43	617	0	23	214	0	15	150	0	27	331	0
Turn Type	Prot			Prot			Perm			Perm		
Protected Phases	5	2		1	6			8			4	
Permitted Phases							8			4		
Actuated Green, G (s)	15.0	26.0		15.0	26.0		22.0	22.0		22.0	22.0	
Effective Green, g (s)	15.0	26.0		15.0	26.0		22.0	22.0		22.0	22.0	
Actuated g/C Ratio	0.20	0.35		0.20	0.35		0.29	0.29		0.29	0.29	
Clearance Time (s)	4.0	4.0		4.0	4.0		4.0	4.0		4.0	4.0	
Lane Grp Cap (vph)	360	1317		360	1317		209	1115		528	1115	
v/s Ratio Prot	c0.02	c0.16		0.01	0.06			0.04			c0.09	
v/s Ratio Perm							0.02			0.01		
v/c Ratio	0.12	0.47		0.06	0.16		0.07	0.13		0.05	0.30	
Uniform Delay, d1	24.6	19.1		24.3	17.0		19.1	19.5		19.0	20.5	
Progression Factor	1.00	1.00		1.00	1.00		1.00	1.00		1.00	1.00	
Incremental Delay, d2	0.7	1.2		0.3	0.3		0.7	0.3		0.2	0.7	
Delay (s)	25.3	20.3		24.7	17.2		19.8	19.7		19.2	21.2	
Level of Service	C	C		C	B		B	B		B	C	
Approach Delay (s)		20.6			17.9			19.7			21.1	
Approach LOS		C			B			B			C	

Intersection Summary			
HCM Average Control Delay	20.2	HCM Level of Service	C
HCM Volume to Capacity ratio	0.33		
Actuated Cycle Length (s)	75.0	Sum of lost time (s)	12.0
Intersection Capacity Utilization	52.0%	ICU Level of Service	A
Analysis Period (min)	15		

c Critical Lane Group

Movement	EBL	EBT	EBR	WBL	WBT	WBR	NBL	NBT	NBR	SBL	SBT	SBR
Lane Configurations												
Ideal Flow (vphpl)	1800	1900	1900	1800	1900	1900	1800	1900	1900	1800	1900	1900
Total Lost time (s)	4.0	4.0		4.0	4.0		4.0	4.0		4.0	4.0	
Lane Util. Factor	1.00	*1.00		1.00	*1.00		1.00	*1.00		1.00	*1.00	
Frt	1.00	1.00		1.00	1.00		1.00	1.00		1.00	1.00	
Flt Protected	1.00	1.00		1.00	1.00		1.00	1.00		1.00	1.00	
Satd. Flow (prot)	1800	5700		1800	5700		1800	3800		1800	3800	
Flt Permitted	1.00	1.00		1.00	1.00		1.00	1.00		1.00	1.00	
Satd. Flow (perm)	1800	5700		1800	5700		1800	3800		1800	3800	
Volume (vph)	139	1546	181	83	432	77	148	191	85	150	250	38
Peak-hour factor, PHF	0.95	0.95	0.95	0.95	0.95	0.95	0.95	0.95	0.95	0.95	0.95	0.95
Adj. Flow (vph)	146	1627	191	87	455	81	156	201	89	158	263	40
RTOR Reduction (vph)	0	18	0	0	33	0	0	63	0	0	15	0
Lane Group Flow (vph)	146	1800	0	87	503	0	156	227	0	158	288	0
Turn Type	Prot			Prot			pm+pt			pm+pt		
Protected Phases	7	4		3	8		5	2		1	6	
Permitted Phases							2			6		
Actuated Green, G (s)	17.0	39.0		12.0	34.0		23.0	13.0		23.0	13.0	
Effective Green, g (s)	17.0	39.0		12.0	34.0		23.0	13.0		23.0	13.0	
Actuated g/C Ratio	0.19	0.43		0.13	0.38		0.26	0.14		0.26	0.14	
Clearance Time (s)	4.0	4.0		4.0	4.0		4.0	4.0		4.0	4.0	
Lane Grp Cap (vph)	340	2470		240	2153		540	549		540	549	
v/s Ratio Prot	c0.08	c0.32		0.05	0.09		0.03	0.06		c0.03	c0.08	
v/s Ratio Perm							0.05			0.06		
v/c Ratio	0.43	0.73		0.36	0.23		0.29	0.41		0.29	0.53	
Uniform Delay, d1	32.2	21.1		35.5	19.1		27.4	35.0		27.4	35.6	
Progression Factor	1.00	1.00		1.00	1.00		1.00	1.00		1.00	1.00	
Incremental Delay, d2	3.9	1.9		4.2	0.3		1.3	2.3		1.4	3.6	
Delay (s)	36.1	23.0		39.7	19.4		28.7	37.3		28.8	39.2	
Level of Service	D	C		D	B		C	D		C	D	
Approach Delay (s)		24.0			22.2			34.3			35.6	
Approach LOS		C			C			C			D	

Intersection Summary			
HCM Average Control Delay	26.5	HCM Level of Service	C
HCM Volume to Capacity ratio	0.60		
Actuated Cycle Length (s)	90.0	Sum of lost time (s)	16.0
Intersection Capacity Utilization	68.9%	ICU Level of Service	C
Analysis Period (min)	15		

c Critical Lane Group

Movement	EBL	EBT	EBR	WBL	WBT	WBR	NBL	NBT	NBR	SBL	SBT	SBR
Lane Configurations												
Ideal Flow (vphpl)	1800	1900	1900	1800	1900	1900	1800	1900	1900	1800	1900	1900
Total Lost time (s)	4.0	4.0		4.0	4.0		4.0	4.0		4.0	4.0	
Lane Util. Factor	1.00	*1.00		1.00	*1.00		1.00	*1.00		1.00	*1.00	
Frt	1.00	1.00		1.00	1.00		1.00	1.00		1.00	1.00	
Flt Protected	1.00	1.00		1.00	1.00		1.00	1.00		1.00	1.00	
Satd. Flow (prot)	1800	3800		1800	3800		1800	3800		1800	3800	
Flt Permitted	1.00	1.00		1.00	1.00		1.00	1.00		1.00	1.00	
Satd. Flow (perm)	1800	3800		1800	3800		1800	3800		1800	3800	
Volume (vph)	33	531	26	55	260	75	15	64	49	196	144	57
Peak-hour factor, PHF	0.95	0.95	0.95	0.95	0.95	0.95	0.95	0.95	0.95	0.95	0.95	0.95
Adj. Flow (vph)	35	559	27	58	274	79	16	67	52	206	152	60
RTOR Reduction (vph)	0	5	0	0	39	0	0	30	0	0	34	0
Lane Group Flow (vph)	35	581	0	58	314	0	16	89	0	206	178	0
Turn Type	Perm			Perm			Perm			Perm		
Protected Phases		4			8			2			6	
Permitted Phases	4			8			2			6		
Actuated Green, G (s)	35.0	35.0		35.0	35.0		32.0	32.0		32.0	32.0	
Effective Green, g (s)	35.0	35.0		35.0	35.0		32.0	32.0		32.0	32.0	
Actuated g/C Ratio	0.47	0.47		0.47	0.47		0.43	0.43		0.43	0.43	
Clearance Time (s)	4.0	4.0		4.0	4.0		4.0	4.0		4.0	4.0	
Lane Grp Cap (vph)	840	1773		840	1773		768	1621		768	1621	
v/s Ratio Prot		c0.15			0.08			0.02			0.05	
v/s Ratio Perm	0.02			0.03			0.01			c0.11		
v/c Ratio	0.04	0.33		0.07	0.18		0.02	0.06		0.27	0.11	
Uniform Delay, d1	10.9	12.6		11.0	11.6		12.4	12.6		13.9	12.9	
Progression Factor	1.34	1.15		0.78	0.80		1.00	1.00		1.00	1.00	
Incremental Delay, d2	0.1	0.5		0.2	0.2		0.0	0.1		0.9	0.1	
Delay (s)	14.7	14.9		8.8	9.5		12.5	12.7		14.8	13.1	
Level of Service	B	B		A	A		B	B		B	B	
Approach Delay (s)		14.9			9.4			12.7			13.9	
Approach LOS		B			A			B			B	

Intersection Summary			
HCM Average Control Delay	13.0	HCM Level of Service	B
HCM Volume to Capacity ratio	0.30		
Actuated Cycle Length (s)	75.0	Sum of lost time (s)	8.0
Intersection Capacity Utilization	47.0%	ICU Level of Service	A
Analysis Period (min)	15		

c Critical Lane Group

Movement	EBL	EBT	EBR	WBL	WBT	WBR	NBL	NBT	NBR	SBL	SBT	SBR
Lane Configurations												
Sign Control		Stop			Stop			Free			Free	
Grade		0%			0%			0%			0%	
Volume (veh/h)	7	0	4	0	0	0	0	126	0	0	255	6
Peak Hour Factor	0.95	0.95	0.95	0.95	0.95	0.95	0.95	0.95	0.95	0.95	0.95	0.95
Hourly flow rate (vph)	7	0	4	0	0	0	0	133	0	0	268	6
Pedestrians												
Lane Width (ft)												
Walking Speed (ft/s)												
Percent Blockage												
Right turn flare (veh)												
Median type		None			None							
Median storage veh)												
Upstream signal (ft)											931	
pX, platoon unblocked												
vC, conflicting volume	338	404	137	271	407	66	275			133		
vC1, stage 1 conf vol												
vC2, stage 2 conf vol												
vCu, unblocked vol	338	404	137	271	407	66	275			133		
tC, single (s)	7.5	6.5	6.9	7.5	6.5	6.9	4.1			4.1		
tC, 2 stage (s)												
tF (s)	3.5	4.0	3.3	3.5	4.0	3.3	2.2			2.2		
p0 queue free %	99	100	100	100	100	100	100			100		
cM capacity (veh/h)	597	538	892	662	536	990	1300			1465		

Direction, Lane #	EB 1	WB 1	NB 1	NB 2	SB 1	SB 2
Volume Total	12	0	66	66	134	141
Volume Left	7	0	0	0	0	0
Volume Right	4	0	0	0	0	6
cSH	679	1700	1300	1700	1465	1700
Volume to Capacity	0.02	0.00	0.00	0.04	0.00	0.08
Queue Length 95th (ft)	1	0	0	0	0	0
Control Delay (s)	10.4	0.0	0.0	0.0	0.0	0.0
Lane LOS	B	A				
Approach Delay (s)	10.4	0.0	0.0		0.0	
Approach LOS	B	A				

Intersection Summary			
Average Delay	0.3		
Intersection Capacity Utilization	17.2%	ICU Level of Service	A
Analysis Period (min)	15		

Movement	EBL	EBT	EBR	WBL	WBT	WBR	NBL	NBT	NBR	SBL	SBT	SBR
Lane Configurations												
Ideal Flow (vphpl)	1800	1900	1900	1800	1900	1900	1800	1900	1900	1800	1900	1900
Total Lost time (s)	4.0	4.0		4.0	4.0		4.0	4.0		4.0	4.0	4.0
Lane Util. Factor	1.00	*1.00		1.00	*1.00		1.00	1.00		1.00	*1.00	1.00
Frt	1.00	1.00		1.00	1.00		1.00	1.00		1.00	1.00	1.00
Flt Protected	1.00	1.00		1.00	1.00		1.00	1.00		1.00	1.00	1.00
Satd. Flow (prot)	1800	3800		1800	5700		1800	1900		1800	1900	1900
Flt Permitted	1.00	1.00		1.00	1.00		1.00	1.00		1.00	1.00	1.00
Satd. Flow (perm)	1800	3800		1800	5700		1800	1900		1800	1900	1900
Volume (vph)	269	940	153	74	429	14	83	210	75	18	469	67
Peak-hour factor, PHF	0.95	0.95	0.95	0.95	0.95	0.95	0.95	0.95	0.95	0.95	0.95	0.95
Adj. Flow (vph)	283	989	161	78	452	15	87	221	79	19	494	71
RTOR Reduction (vph)	0	18	0	0	5	0	0	17	0	0	0	49
Lane Group Flow (vph)	283	1132	0	78	462	0	87	283	0	19	494	22
Turn Type	Prot			Prot			pm+pt			pm+pt		Perm
Protected Phases	7	4		3	8		5	2		1	6	
Permitted Phases							2			6		6
Actuated Green, G (s)	13.0	24.0		6.0	17.0		29.0	23.0		29.0	23.0	23.0
Effective Green, g (s)	13.0	24.0		6.0	17.0		29.0	23.0		29.0	23.0	23.0
Actuated g/C Ratio	0.17	0.32		0.08	0.23		0.39	0.31		0.39	0.31	0.31
Clearance Time (s)	4.0	4.0		4.0	4.0		4.0	4.0		4.0	4.0	4.0
Lane Grp Cap (vph)	312	1216		144	1292		792	583		792	583	583
v/s Ratio Prot	c0.16	c0.30		0.04	0.08		c0.01	0.15		0.00	c0.26	
v/s Ratio Perm							0.04			0.01		0.01
v/c Ratio	0.91	0.93		0.54	0.36		0.11	0.48		0.02	0.85	0.04
Uniform Delay, d1	30.4	24.7		33.2	24.4		16.5	21.2		14.5	24.4	18.2
Progression Factor	1.00	1.00		1.00	1.00		0.82	0.67		0.38	0.71	0.75
Incremental Delay, d2	31.9	13.8		13.8	0.8		0.3	2.7		0.0	12.5	0.1
Delay (s)	62.3	38.5		47.0	25.2		13.8	16.8		5.6	29.9	13.7
Level of Service	E	D		D	C		B	B		A	C	B
Approach Delay (s)		43.2			28.3			16.2			27.1	
Approach LOS		D			C			B			C	

Intersection Summary			
HCM Average Control Delay	33.7	HCM Level of Service	C
HCM Volume to Capacity ratio	0.80		
Actuated Cycle Length (s)	75.0	Sum of lost time (s)	12.0
Intersection Capacity Utilization	78.1%	ICU Level of Service	D
Analysis Period (min)	15		

c Critical Lane Group

Movement	EBL	EBT	EBR	WBL	WBT	WBR	NBL	NBT	NBR	SBL	SBT	SBR
Lane Configurations												
Ideal Flow (vphpl)	1800	1900	1900	1800	1900	1900	1800	1900	1900	1800	1900	1900
Total Lost time (s)	4.0	4.0		4.0	4.0		4.0	4.0		4.0	4.0	
Lane Util. Factor	1.00	*1.00		1.00	*1.00		1.00	*1.00		1.00	*1.00	
Frt	1.00	1.00		1.00	1.00		1.00	1.00		1.00	1.00	
Flt Protected	1.00	1.00		1.00	1.00		1.00	1.00		1.00	1.00	
Satd. Flow (prot)	1800	3800		1800	3800		1800	1900		1800	1900	
Flt Permitted	1.00	1.00		1.00	1.00		1.00	1.00		1.00	1.00	
Satd. Flow (perm)	1800	3800		1800	3800		1800	1900		1800	1900	
Volume (vph)	38	604	41	27	265	57	19	271	74	129	370	39
Peak-hour factor, PHF	0.95	0.95	0.95	0.95	0.95	0.95	0.95	0.95	0.95	0.95	0.95	0.95
Adj. Flow (vph)	40	636	43	28	279	60	20	285	78	136	389	41
RTOR Reduction (vph)	0	7	0	0	26	0	0	13	0	0	5	0
Lane Group Flow (vph)	40	672	0	28	313	0	20	350	0	136	425	0
Turn Type	Perm			Perm			pm+pt			pm+pt		
Protected Phases		4			8		5	2		1	6	
Permitted Phases	4			8			2			6		
Actuated Green, G (s)	23.0	23.0		23.0	23.0		40.0	30.0		40.0	30.0	
Effective Green, g (s)	23.0	23.0		23.0	23.0		40.0	30.0		40.0	30.0	
Actuated g/C Ratio	0.31	0.31		0.31	0.31		0.53	0.40		0.53	0.40	
Clearance Time (s)	4.0	4.0		4.0	4.0		4.0	4.0		4.0	4.0	
Lane Grp Cap (vph)	552	1165		552	1165		1056	760		1056	760	
v/s Ratio Prot		c0.18			0.08		0.00	0.18		c0.02	c0.22	
v/s Ratio Perm	0.02			0.02			0.01			0.06		
v/c Ratio	0.07	0.58		0.05	0.27		0.02	0.46		0.13	0.56	
Uniform Delay, d1	18.4	21.9		18.3	19.6		8.9	16.5		9.2	17.4	
Progression Factor	1.07	1.13		0.72	0.73		1.00	1.00		2.06	1.63	
Incremental Delay, d2	0.3	2.1		0.2	0.6		0.0	2.0		0.1	1.6	
Delay (s)	20.0	26.8		13.4	14.9		9.0	18.5		19.1	29.9	
Level of Service	B	C		B	B		A	B		B	C	
Approach Delay (s)		26.5			14.8			18.0			27.3	
Approach LOS		C			B			B			C	

Intersection Summary			
HCM Average Control Delay	23.0	HCM Level of Service	C
HCM Volume to Capacity ratio	0.50		
Actuated Cycle Length (s)	75.0	Sum of lost time (s)	12.0
Intersection Capacity Utilization	61.0%	ICU Level of Service	B
Analysis Period (min)	15		

c Critical Lane Group

Movement	EBL	EBT	EBR	WBL	WBT	WBR	NBL	NBT	NBR	SBL	SBT	SBR
Lane Configurations												
Ideal Flow (vphpl)	1800	1900	1900	1800	1900	1900	1800	1900	1900	1800	1900	1900
Total Lost time (s)	4.0	4.0		4.0	4.0		4.0	4.0		4.0	4.0	
Lane Util. Factor	1.00	*1.00		1.00	*1.00		1.00	*1.00		1.00	*1.00	
Frt	1.00	1.00		1.00	1.00		1.00	1.00		1.00	1.00	
Flt Protected	1.00	1.00		1.00	1.00		1.00	1.00		1.00	1.00	
Satd. Flow (prot)	1800	3800		1800	3800		1800	3800		1800	3800	
Flt Permitted	1.00	1.00		1.00	1.00		1.00	1.00		1.00	1.00	
Satd. Flow (perm)	1800	3800		1800	3800		1800	3800		1800	3800	
Volume (vph)	64	277	19	39	243	41	9	219	25	61	349	49
Peak-hour factor, PHF	0.95	0.95	0.95	0.95	0.95	0.95	0.95	0.95	0.95	0.95	0.95	0.95
Adj. Flow (vph)	67	292	20	41	256	43	9	231	26	64	367	52
RTOR Reduction (vph)	0	7	0	0	19	0	0	12	0	0	16	0
Lane Group Flow (vph)	67	305	0	41	280	0	9	245	0	64	403	0
Turn Type	Perm			Perm			Perm			Perm		
Protected Phases		4			8			2			6	
Permitted Phases	4			8			2			6		
Actuated Green, G (s)	34.0	34.0		34.0	34.0		33.0	33.0		33.0	33.0	
Effective Green, g (s)	34.0	34.0		34.0	34.0		33.0	33.0		33.0	33.0	
Actuated g/C Ratio	0.45	0.45		0.45	0.45		0.44	0.44		0.44	0.44	
Clearance Time (s)	4.0	4.0		4.0	4.0		4.0	4.0		4.0	4.0	
Lane Grp Cap (vph)	816	1723		816	1723		792	1672		792	1672	
v/s Ratio Prot		c0.08			0.07			0.06			c0.11	
v/s Ratio Perm	0.04			0.02			0.01			0.04		
v/c Ratio	0.08	0.18		0.05	0.16		0.01	0.15		0.08	0.24	
Uniform Delay, d1	11.6	12.2		11.5	12.1		11.8	12.6		12.2	13.2	
Progression Factor	0.47	0.50		1.00	1.00		1.00	1.00		1.00	1.00	
Incremental Delay, d2	0.2	0.2		0.1	0.2		0.0	0.2		0.2	0.3	
Delay (s)	5.6	6.3		11.6	12.3		11.8	12.8		12.4	13.5	
Level of Service	A	A		B	B		B	B		B	B	
Approach Delay (s)		6.2			12.2			12.7			13.4	
Approach LOS		A			B			B			B	

Intersection Summary			
HCM Average Control Delay	11.1	HCM Level of Service	B
HCM Volume to Capacity ratio	0.21		
Actuated Cycle Length (s)	75.0	Sum of lost time (s)	8.0
Intersection Capacity Utilization	39.6%	ICU Level of Service	A
Analysis Period (min)	15		

c Critical Lane Group

Movement	EBL	EBT	EBR	WBL	WBT	WBR	NBL	NBT	NBR	SBL	SBT	SBR
Lane Configurations												
Ideal Flow (vphpl)	1800	1900	1900	1800	1900	1900	1800	1900	1900	1800	1900	1900
Total Lost time (s)	4.0	4.0	4.0	4.0	4.0		4.0	4.0		4.0	4.0	4.0
Lane Util. Factor	1.00	*1.00	1.00	1.00	*1.00		1.00	*1.00		1.00	*1.00	1.00
Frt	1.00	1.00	1.00	1.00	1.00		1.00	1.00		1.00	1.00	1.00
Flt Protected	1.00	1.00	1.00	1.00	1.00		1.00	1.00		1.00	1.00	1.00
Satd. Flow (prot)	1800	3800	1900	1800	3800		1800	3800		1800	3800	1900
Flt Permitted	1.00	1.00	1.00	1.00	1.00		1.00	1.00		1.00	1.00	1.00
Satd. Flow (perm)	1800	3800	1900	1800	3800		1800	3800		1800	3800	1900
Volume (vph)	185	1174	407	10	315	15	111	167	12	22	138	114
Peak-hour factor, PHF	0.95	0.95	0.95	0.95	0.95	0.95	0.95	0.95	0.95	0.95	0.95	0.95
Adj. Flow (vph)	195	1236	428	11	332	16	117	176	13	23	145	120
RTOR Reduction (vph)	0	0	199	0	5	0	0	8	0	0	0	94
Lane Group Flow (vph)	195	1236	229	11	343	0	117	181	0	23	145	26
Turn Type	Prot		Perm	Prot			pm+pt			pm+pt		Perm
Protected Phases	7	4		3	8		5	2		1	6	
Permitted Phases			4				2			6		6
Actuated Green, G (s)	15.0	31.0	31.0	6.0	22.0		22.0	16.0		22.0	16.0	16.0
Effective Green, g (s)	15.0	31.0	31.0	6.0	22.0		22.0	16.0		22.0	16.0	16.0
Actuated g/C Ratio	0.20	0.41	0.41	0.08	0.29		0.29	0.21		0.29	0.21	0.21
Clearance Time (s)	4.0	4.0	4.0	4.0	4.0		4.0	4.0		4.0	4.0	4.0
Lane Grp Cap (vph)	360	1571	785	144	1115		624	811		624	811	405
v/s Ratio Prot	c0.11	c0.33		0.01	0.09		c0.01	c0.05		0.00	0.04	
v/s Ratio Perm			0.12				0.05			0.01		0.01
v/c Ratio	0.54	0.79	0.29	0.08	0.31		0.19	0.22		0.04	0.18	0.06
Uniform Delay, d1	26.9	19.1	14.7	31.9	20.6		20.0	24.4		19.0	24.1	23.5
Progression Factor	1.00	1.00	1.00	0.77	1.12		1.00	1.00		1.00	1.00	1.00
Incremental Delay, d2	5.7	4.1	0.9	1.0	0.7		0.7	0.6		0.1	0.5	0.3
Delay (s)	32.7	23.2	15.6	25.7	23.8		20.7	25.0		19.1	24.6	23.8
Level of Service	C	C	B	C	C		C	C		B	C	C
Approach Delay (s)		22.4			23.8			23.4			23.8	
Approach LOS		C			C			C			C	

Intersection Summary			
HCM Average Control Delay	22.9	HCM Level of Service	C
HCM Volume to Capacity ratio	0.57		
Actuated Cycle Length (s)	75.0	Sum of lost time (s)	16.0
Intersection Capacity Utilization	59.4%	ICU Level of Service	B
Analysis Period (min)	15		

c Critical Lane Group

Movement	EBL	EBT	WBT	WBR	SBL	SBR
Lane Configurations						
Sign Control		Free	Free		Stop	
Grade		0%	0%		0%	
Volume (veh/h)	44	434	281	41	27	34
Peak Hour Factor	0.95	0.95	0.95	0.95	0.95	0.95
Hourly flow rate (vph)	46	457	296	43	28	36
Pedestrians						
Lane Width (ft)						
Walking Speed (ft/s)						
Percent Blockage						
Right turn flare (veh)						
Median type					None	
Median storage veh)						
Upstream signal (ft)		670	698			
pX, platoon unblocked						
vC, conflicting volume	339				638	169
vC1, stage 1 conf vol	0					
vC2, stage 2 conf vol	0					
vCu, unblocked vol	339				638	169
tC, single (s)	4.1				6.8	6.9
tC, 2 stage (s)	3.1					
tF (s)	2.2				3.5	3.3
p0 queue free %	95				93	96
cM capacity (veh/h)	975				394	851

Direction, Lane #	EB 1	EB 2	WB 1	WB 2	SB 1	SB 2
Volume Total	199	305	197	142	28	36
Volume Left	46	0	0	0	28	0
Volume Right	0	0	0	43	0	36
cSH	975	1700	1700	1700	394	851
Volume to Capacity	0.05	0.18	0.12	0.08	0.07	0.04
Queue Length 95th (ft)	4	0	0	0	6	3
Control Delay (s)	2.4	0.0	0.0	0.0	14.9	9.4
Lane LOS	A				B	A
Approach Delay (s)	1.0		0.0		11.8	
Approach LOS					B	

Intersection Summary			
Average Delay	1.4		
Intersection Capacity Utilization	35.7%	ICU Level of Service	A
Analysis Period (min)	15		

Movement	EBL	EBT	EBR	WBL	WBT	WBR	NBL	NBT	NBR	SBL	SBT	SBR
Lane Configurations												
Ideal Flow (vphpl)	1800	1900	1900	1800	1900	1900	1800	1900	1900	1800	1900	1900
Total Lost time (s)	4.0	4.0		4.0	4.0		4.0	4.0		4.0	4.0	
Lane Util. Factor	1.00	*1.00		1.00	*1.00		1.00	1.00		1.00	1.00	
Frt	1.00	1.00		1.00	1.00		1.00	1.00		1.00	1.00	
Flt Protected	1.00	1.00		1.00	1.00		1.00	1.00		1.00	1.00	
Satd. Flow (prot)	1800	3800		1800	3800		1800	1900		1800	1900	
Flt Permitted	1.00	1.00		1.00	1.00		1.00	1.00		1.00	1.00	
Satd. Flow (perm)	1800	3800		1800	3800		1800	1900		1800	1900	
Volume (vph)	55	915	108	55	289	28	47	236	64	77	371	34
Peak-hour factor, PHF	0.95	0.95	0.95	0.95	0.95	0.95	0.95	0.95	0.95	0.95	0.95	0.95
Adj. Flow (vph)	58	963	114	58	304	29	49	248	67	81	391	36
RTOR Reduction (vph)	0	13	0	0	10	0	0	13	0	0	5	0
Lane Group Flow (vph)	58	1064	0	58	323	0	49	302	0	81	422	0
Turn Type	Perm			Perm			Perm			Perm		
Protected Phases		4			8			2			6	
Permitted Phases	4			8			2			6		
Actuated Green, G (s)	36.0	36.0		36.0	36.0		31.0	31.0		31.0	31.0	
Effective Green, g (s)	36.0	36.0		36.0	36.0		31.0	31.0		31.0	31.0	
Actuated g/C Ratio	0.48	0.48		0.48	0.48		0.41	0.41		0.41	0.41	
Clearance Time (s)	4.0	4.0		4.0	4.0		4.0	4.0		4.0	4.0	
Lane Grp Cap (vph)	864	1824		864	1824		744	785		744	785	
v/s Ratio Prot		c0.28			0.09			0.16			c0.22	
v/s Ratio Perm	0.03			0.03			0.03			0.04		
v/c Ratio	0.07	0.58		0.07	0.18		0.07	0.38		0.11	0.54	
Uniform Delay, d1	10.5	14.1		10.5	11.1		13.3	15.3		13.5	16.6	
Progression Factor	1.95	2.16		1.00	1.00		0.62	0.51		1.00	1.00	
Incremental Delay, d2	0.1	0.8		0.1	0.2		0.2	1.3		0.3	2.6	
Delay (s)	20.5	31.3		10.6	11.3		8.4	9.1		13.8	19.2	
Level of Service	C	C		B	B		A	A		B	B	
Approach Delay (s)		30.7			11.2			9.0			18.4	
Approach LOS		C			B			A			B	

Intersection Summary			
HCM Average Control Delay	21.6	HCM Level of Service	C
HCM Volume to Capacity ratio	0.56		
Actuated Cycle Length (s)	75.0	Sum of lost time (s)	8.0
Intersection Capacity Utilization	70.3%	ICU Level of Service	C
Analysis Period (min)	15		

c Critical Lane Group

Movement	EBL	EBT	EBR	WBL	WBT	WBR	NBL	NBT	NBR	SBL	SBT	SBR
Lane Configurations												
Ideal Flow (vphpl)	1800	1900	1900	1800	1900	1900	1800	1900	1900	1800	1900	1900
Total Lost time (s)	4.0	4.0		4.0	4.0		4.0	4.0		4.0	4.0	
Lane Util. Factor	1.00	*1.00		1.00	*1.00		1.00	1.00		1.00	1.00	
Frt	1.00	1.00		1.00	1.00		1.00	1.00		1.00	1.00	
Flt Protected	1.00	1.00		1.00	1.00		1.00	1.00		1.00	1.00	
Satd. Flow (prot)	1800	3800		1800	3800		1800	1900		1800	1900	
Flt Permitted	1.00	1.00		1.00	1.00		1.00	1.00		1.00	1.00	
Satd. Flow (perm)	1800	3800		1800	3800		1800	1900		1800	1900	
Volume (vph)	10	88	23	8	27	19	16	341	100	31	446	34
Peak-hour factor, PHF	0.95	0.95	0.95	0.95	0.95	0.95	0.95	0.95	0.95	0.95	0.95	0.95
Adj. Flow (vph)	11	93	24	8	28	20	17	359	105	33	469	36
RTOR Reduction (vph)	0	19	0	0	16	0	0	14	0	0	4	0
Lane Group Flow (vph)	11	98	0	8	32	0	17	450	0	33	501	0
Turn Type	pm+pt			pm+pt			pm+pt			Perm		
Protected Phases	7	4		3	8		5	2			6	
Permitted Phases	4			8			2			6		
Actuated Green, G (s)	22.0	16.0		22.0	16.0		41.0	41.0		31.0	31.0	
Effective Green, g (s)	22.0	16.0		22.0	16.0		41.0	41.0		31.0	31.0	
Actuated g/C Ratio	0.29	0.21		0.29	0.21		0.55	0.55		0.41	0.41	
Clearance Time (s)	4.0	4.0		4.0	4.0		4.0	4.0		4.0	4.0	
Lane Grp Cap (vph)	624	811		624	811		984	1039		744	785	
v/s Ratio Prot	c0.00	c0.03		0.00	0.01		0.00	c0.24			c0.26	
v/s Ratio Perm	0.00			0.00			0.01			0.02		
v/c Ratio	0.02	0.12		0.01	0.04		0.02	0.43		0.04	0.64	
Uniform Delay, d1	18.8	23.8		18.8	23.4		9.8	10.1		13.1	17.5	
Progression Factor	1.00	1.00		1.00	1.00		1.88	1.82		0.88	0.73	
Incremental Delay, d2	0.1	0.3		0.0	0.1		0.0	0.9		0.1	3.5	
Delay (s)	18.9	24.1		18.8	23.5		18.4	19.2		11.6	16.3	
Level of Service	B	C		B	C		B	B		B	B	
Approach Delay (s)		23.7			22.8			19.2			16.0	
Approach LOS		C			C			B			B	

Intersection Summary			
HCM Average Control Delay	18.4	HCM Level of Service	B
HCM Volume to Capacity ratio	0.43		
Actuated Cycle Length (s)	75.0	Sum of lost time (s)	16.0
Intersection Capacity Utilization	41.1%	ICU Level of Service	A
Analysis Period (min)	15		

c Critical Lane Group

Movement	EBL	EBT	EBR	EBR2	WBL2	WBL	WBT	WBR	NBL2	NBL	NBT	NBR
Lane Configurations												
Ideal Flow (vphpl)	1800	1900	1900	1900	1700	1700	1900	1900	1800	1800	1900	1900
Total Lost time (s)	4.0	4.0	4.0			4.0	4.0			4.0	4.0	4.0
Lane Util. Factor	1.00	*1.00	*1.00			*1.00	*1.00			*1.00	*1.00	1.00
Frt	1.00	1.00	1.00			1.00	1.00			1.00	1.00	1.00
Flt Protected	1.00	1.00	1.00			1.00	1.00			1.00	1.00	1.00
Satd. Flow (prot)	1800	3800	1900			3400	3800			1800	3800	1900
Flt Permitted	1.00	1.00	1.00			1.00	1.00			1.00	1.00	1.00
Satd. Flow (perm)	1800	3800	1900			3400	3800			1800	3800	1900
Volume (vph)	117	615	113	4	64	149	335	24	29	63	217	69
Peak-hour factor, PHF	0.95	0.95	0.95	0.95	0.95	0.95	0.95	0.95	0.95	0.95	0.95	0.95
Adj. Flow (vph)	123	647	119	4	67	157	353	25	31	66	228	73
RTOR Reduction (vph)	0	0	1	0	0	0	7	0	0	0	0	57
Lane Group Flow (vph)	123	647	122	0	0	224	371	0	0	53	272	16
Turn Type	Prot		Perm		Prot	Prot			Prot	Prot		Perm
Protected Phases	5	2			1	1	6		3	3	8	
Permitted Phases			2									8
Actuated Green, G (s)	9.0	19.0	19.0			7.0	17.0			6.0	22.0	16.0
Effective Green, g (s)	9.0	19.0	19.0			7.0	17.0			6.0	22.0	16.0
Actuated g/C Ratio	0.12	0.25	0.25			0.09	0.23			0.08	0.29	0.21
Clearance Time (s)	4.0	4.0	4.0			4.0	4.0			4.0	4.0	4.0
Lane Grp Cap (vph)	216	963	481			317	861			144	1317	405
v/s Ratio Prot	0.07	c0.17				c0.07	0.10			c0.03	0.02	
v/s Ratio Perm			0.06								0.06	0.01
v/c Ratio	0.57	0.67	0.25			0.71	0.43			0.37	0.21	0.04
Uniform Delay, d1	31.2	25.2	22.3			33.0	24.9			32.7	19.9	23.4
Progression Factor	1.00	1.00	1.00			1.00	1.00			1.00	1.00	1.00
Incremental Delay, d2	10.5	3.7	1.3			12.5	1.6			7.1	0.4	0.2
Delay (s)	41.6	28.9	23.6			45.5	26.4			39.8	20.3	23.6
Level of Service	D	C	C			D	C			D	C	C
Approach Delay (s)		29.9					33.5				23.5	
Approach LOS		C					C				C	

Intersection Summary			
HCM Average Control Delay	31.3	HCM Level of Service	C
HCM Volume to Capacity ratio	0.58		
Actuated Cycle Length (s)	75.0	Sum of lost time (s)	16.0
Intersection Capacity Utilization	70.2%	ICU Level of Service	C
Analysis Period (min)	15		

c Critical Lane Group

Movement	SBL	SBT	SBR	SBR2	NEL2	NEL	NER	NER2
Lane Configurations								
Ideal Flow (vphpl)	1800	1900	1900	1900	1700	1700	1800	1800
Total Lost time (s)	4.0	4.0	4.0			4.0	4.0	
Lane Util. Factor	1.00	*1.00	*1.00			*1.00	*1.00	
Frt	1.00	1.00	1.00			1.00	1.00	
Flt Protected	1.00	1.00	1.00			1.00	1.00	
Satd. Flow (prot)	1800	1900	1900			3400	3600	
Flt Permitted	1.00	1.00	1.00			1.00	1.00	
Satd. Flow (perm)	1800	1900	1900			3400	3600	
Volume (vph)	38	239	52	60	4	111	187	39
Peak-hour factor, PHF	0.95	0.95	0.95	0.95	0.95	0.95	0.95	0.95
Adj. Flow (vph)	40	252	55	63	4	117	197	41
RTOR Reduction (vph)	0	0	50	0	0	0	25	0
Lane Group Flow (vph)	40	252	68	0	0	121	213	0
Turn Type	Prot		Perm		Split		Perm	
Protected Phases	7	4			9	9		
Permitted Phases			4				9	
Actuated Green, G (s)	6.0	16.0	16.0			7.0	7.0	
Effective Green, g (s)	6.0	16.0	16.0			7.0	7.0	
Actuated g/C Ratio	0.08	0.21	0.21			0.09	0.09	
Clearance Time (s)	4.0	4.0	4.0			4.0	4.0	
Lane Grp Cap (vph)	144	405	405			317	336	
v/s Ratio Prot	0.02	c0.13				0.04		
v/s Ratio Perm			0.04				c0.06	
v/c Ratio	0.28	0.62	0.17			0.38	0.63	
Uniform Delay, d1	32.5	26.8	24.1			32.0	32.8	
Progression Factor	1.00	1.00	1.00			1.00	1.00	
Incremental Delay, d2	4.7	7.0	0.9			3.5	8.8	
Delay (s)	37.2	33.8	25.0			35.4	41.5	
Level of Service	D	C	C			D	D	
Approach Delay (s)		31.6				39.5		
Approach LOS		C				D		

Intersection Summary

FORECAST YEAR (2035) NO PROJECT CONDITIONS

PM PEAK HOUR

Movement	EBL	EBT	EBR	WBL	WBT	WBR	NBL	NBT	NBR	SBL	SBT	SBR
Lane Configurations												
Sign Control		Free			Free			Stop			Stop	
Grade		0%			0%			0%			0%	
Volume (veh/h)	2	299	99	61	143	1	8	2	27	0	0	0
Peak Hour Factor	0.95	0.95	0.95	0.95	0.95	0.95	0.95	0.95	0.95	0.95	0.95	0.95
Hourly flow rate (vph)	2	315	104	64	151	1	8	2	28	0	0	0
Pedestrians												
Lane Width (ft)												
Walking Speed (ft/s)												
Percent Blockage												
Right turn flare (veh)												
Median type								None			None	
Median storage veh)												
Upstream signal (ft)												
pX, platoon unblocked												
vC, conflicting volume	152			419			598	599	157	471	703	151
vC1, stage 1 conf vol												
vC2, stage 2 conf vol												
vCu, unblocked vol	152			419			598	599	157	471	703	151
tC, single (s)	4.1			4.1			7.5	6.5	6.9	7.5	6.5	6.9
tC, 2 stage (s)												
tF (s)	2.2			2.2			3.5	4.0	3.3	3.5	4.0	3.3
p0 queue free %	100			94			98	99	97	100	100	100
cM capacity (veh/h)	1442			1151			373	394	866	443	344	875

Direction, Lane #	EB 1	EB 2	EB 3	WB 1	NB 1
Volume Total	107	210	104	216	39
Volume Left	2	0	0	64	8
Volume Right	0	0	104	1	28
cSH	1442	1700	1700	1151	641
Volume to Capacity	0.00	0.12	0.06	0.06	0.06
Queue Length 95th (ft)	0	0	0	4	5
Control Delay (s)	0.2	0.0	0.0	2.8	11.0
Lane LOS	A			A	B
Approach Delay (s)	0.0			2.8	11.0
Approach LOS					B

Intersection Summary			
Average Delay	1.6		
Intersection Capacity Utilization	32.6%	ICU Level of Service	A
Analysis Period (min)	15		

Year 2035 No Build PM Peak Hour
City of San Bernardino
Redlands First Mile

Level Of Service Computation Report
2000 HCM 4-Way Stop Method (Base Volume Alternative)

Intersection #2 K St and 2nd St

Cycle (sec):	100	Critical Vol./Cap.(X):	0.426
Loss Time (sec):	0 (Y+R=4.0 sec)	Average Delay (sec/veh):	12.0
Optimal Cycle:	0	Level Of Service:	B

Street Name:	K St						2nd St					
Approach:	North Bound			South Bound			East Bound			West Bound		
Movement:	L - T - R			L - T - R			L - T - R			L - T - R		
Control:	Stop Sign			Stop Sign			Stop Sign			Stop Sign		
Rights:	Include			Include			Include			Include		
Min. Green:	0	0	0	0	0	0	0	0	0	0	0	0
Lanes:	0 0	1! 0	0	0 0	1! 0	0	1 0	1 1	0	1 0	1 1	0
Volume Module:												
Base Vol:	38	8	53	93	42	27	19	464	15	62	375	17
Growth Adj:	1.00	1.00	1.00	1.00	1.00	1.00	1.00	1.00	1.00	1.00	1.00	1.00
Initial Bse:	38	8	53	93	42	27	19	464	15	62	375	17
User Adj:	1.00	1.00	1.00	1.00	1.00	1.00	1.00	1.00	1.00	1.00	1.00	1.00
PHF Adj:	0.95	0.95	0.95	0.95	0.95	0.95	0.95	0.95	0.95	0.95	0.95	0.95
PHF Volume:	40	8	56	98	44	28	20	488	16	65	395	18
Reduct Vol:	0	0	0	0	0	0	0	0	0	0	0	0
Reduced Vol:	40	8	56	98	44	28	20	488	16	65	395	18
PCE Adj:	1.00	1.00	1.00	1.00	1.00	1.00	1.00	1.00	1.00	1.00	1.00	1.00
MLF Adj:	1.00	1.00	1.00	1.00	1.00	1.00	1.00	1.00	1.00	1.00	1.00	1.00
FinalVolume:	40	8	56	98	44	28	20	488	16	65	395	18
Saturation Flow Module:												
Adjustment:	1.00	1.00	1.00	1.00	1.00	1.00	1.00	1.00	1.00	1.00	1.00	1.00
Lanes:	0.38	0.08	0.54	0.57	0.26	0.17	1.00	1.94	0.06	1.00	1.91	0.09
Final Sat.:	204	43	285	309	140	90	542	1146	37	536	1118	51
Capacity Analysis Module:												
Vol/Sat:	0.20	0.20	0.20	0.32	0.32	0.32	0.04	0.43	0.42	0.12	0.35	0.35
Crit Moves:		****			****			****			****	
Delay/Veh:	10.5	10.5	10.5	11.9	11.9	11.9	9.4	12.8	12.7	10.1	11.8	11.7
Delay Adj:	1.00	1.00	1.00	1.00	1.00	1.00	1.00	1.00	1.00	1.00	1.00	1.00
AdjDel/Veh:	10.5	10.5	10.5	11.9	11.9	11.9	9.4	12.8	12.7	10.1	11.8	11.7
LOS by Move:	B	B	B	B	B	B	A	B	B	B	B	B
ApproachDel:		10.5			11.9			12.7			11.5	
Delay Adj:		1.00			1.00			1.00			1.00	
ApprAdjDel:		10.5			11.9			12.7			11.5	
LOS by Appr:		B			B			B			B	
AllWayAvgQ:	0.2	0.2	0.2	0.4	0.4	0.4	0.0	0.7	0.7	0.1	0.5	0.5

Note: Queue reported is the number of cars per lane.

Movement	EBL	EBT	EBR	WBL	WBT	WBR	NBL	NBT	NBR	SBL	SBT	SBR
Lane Configurations												
Ideal Flow (vphpl)	1900	1900	1900	1900	1900	1900	1900	1900	1900	1900	1900	1900
Total Lost time (s)		4.0			4.0			4.0	4.0		4.0	4.0
Lane Util. Factor		*1.00			*1.00			1.00	1.00		1.00	1.00
Frt		1.00			1.00			1.00	1.00		1.00	1.00
Flt Protected		1.00			1.00			1.00	1.00		1.00	1.00
Satd. Flow (prot)		3800			3800			1900	1900		1900	1900
Flt Permitted		1.00			1.00			1.00	1.00		1.00	1.00
Satd. Flow (perm)		3800			3800			1900	1900		1900	1900
Volume (vph)	8	393	53	145	593	16	49	55	173	6	69	32
Peak-hour factor, PHF	0.95	0.95	0.95	0.95	0.95	0.95	0.95	0.95	0.95	0.95	0.95	0.95
Adj. Flow (vph)	8	414	56	153	624	17	52	58	182	6	73	34
RTOR Reduction (vph)	0	14	0	0	2	0	0	0	141	0	0	27
Lane Group Flow (vph)	0	464	0	0	792	0	0	110	41	0	79	7
Turn Type	Perm			Perm			Split		Perm	Split		Perm
Protected Phases		4			8		2	2		6	6	
Permitted Phases	4			8					2			6
Actuated Green, G (s)		30.0			30.0			17.0	17.0		16.0	16.0
Effective Green, g (s)		30.0			30.0			17.0	17.0		16.0	16.0
Actuated g/C Ratio		0.40			0.40			0.23	0.23		0.21	0.21
Clearance Time (s)		4.0			4.0			4.0	4.0		4.0	4.0
Lane Grp Cap (vph)		1520			1520			431	431		405	405
v/s Ratio Prot								c0.06			c0.04	
v/s Ratio Perm		0.12			0.21				0.02			0.00
v/c Ratio		0.30			0.52			0.26	0.10		0.20	0.02
Uniform Delay, d1		15.4			17.1			23.8	22.9		24.2	23.3
Progression Factor		1.00			0.93			1.00	1.00		1.00	1.00
Incremental Delay, d2		0.5			1.2			1.4	0.4		1.1	0.1
Delay (s)		15.9			17.2			25.2	23.4		25.3	23.4
Level of Service		B			B			C	C		C	C
Approach Delay (s)		15.9			17.2			24.1			24.7	
Approach LOS		B			B			C			C	

Intersection Summary			
HCM Average Control Delay	18.5	HCM Level of Service	B
HCM Volume to Capacity ratio	0.37		
Actuated Cycle Length (s)	75.0	Sum of lost time (s)	12.0
Intersection Capacity Utilization	56.2%	ICU Level of Service	B
Analysis Period (min)	15		

c Critical Lane Group

Movement	EBT	EBR	WBL	WBT	NBL	NBR
Lane Configurations						
Sign Control	Free			Free	Stop	
Grade	0%			0%	0%	
Volume (veh/h)	346	30	36	190	5	32
Peak Hour Factor	0.95	0.95	0.95	0.95	0.95	0.95
Hourly flow rate (vph)	364	32	38	200	5	34
Pedestrians						
Lane Width (ft)						
Walking Speed (ft/s)						
Percent Blockage						
Right turn flare (veh)						
Median type					None	
Median storage veh)						
Upstream signal (ft)				682		
pX, platoon unblocked						
vC, conflicting volume			396		556	198
vC1, stage 1 conf vol						
vC2, stage 2 conf vol						
vCu, unblocked vol			396		556	198
tC, single (s)			4.1		6.8	6.9
tC, 2 stage (s)						
tF (s)			2.2		3.5	3.3
p0 queue free %			97		99	96
cM capacity (veh/h)			1174		451	816

Direction, Lane #	EB 1	EB 2	WB 1	WB 2	NB 1
Volume Total	243	153	105	133	39
Volume Left	0	0	38	0	5
Volume Right	0	32	0	0	34
cSH	1700	1700	1174	1700	736
Volume to Capacity	0.14	0.09	0.03	0.08	0.05
Queue Length 95th (ft)	0	0	3	0	4
Control Delay (s)	0.0	0.0	3.1	0.0	10.2
Lane LOS			A		B
Approach Delay (s)	0.0		1.4		10.2
Approach LOS					B

Intersection Summary			
Average Delay	1.1		
Intersection Capacity Utilization	30.2%	ICU Level of Service	A
Analysis Period (min)	15		

Year 2035 No Build PM Peak Hour
City of San Bernardino
Redlands First Mile

Level Of Service Computation Report
2000 HCM Unsignalized Method (Base Volume Alternative)

Intersection #5 J St and 2nd St

Average Delay (sec/veh): 4.8 Worst Case Level Of Service: F[54.2]

Street Name:	J St						2nd St					
Approach:	North Bound			South Bound			East Bound			West Bound		
Movement:	L	T	R	L	T	R	L	T	R	L	T	R
Control:	Stop Sign			Stop Sign			Uncontrolled			Uncontrolled		
Rights:	Include			Include			Include			Include		
Lanes:	0 0 1! 0 0			0 0 1! 0 0			1 0 1 1 0			1 0 1 1 0		
Volume Module:												
Base Vol:	21	1	176	41	16	5	10	640	31	43	555	29
Growth Adj:	1.00	1.00	1.00	1.00	1.00	1.00	1.00	1.00	1.00	1.00	1.00	1.00
Initial Bse:	21	1	176	41	16	5	10	640	31	43	555	29
User Adj:	1.00	1.00	1.00	1.00	1.00	1.00	1.00	1.00	1.00	1.00	1.00	1.00
PHF Adj:	0.95	0.95	0.95	0.95	0.95	0.95	0.95	0.95	0.95	0.95	0.95	0.95
PHF Volume:	22	1	185	43	17	5	11	674	33	45	584	31
Reduct Vol:	0	0	0	0	0	0	0	0	0	0	0	0
FinalVolume:	22	1	185	43	17	5	11	674	33	45	584	31
Critical Gap Module:												
Critical Gp:	7.5	6.5	6.9	7.5	6.5	6.9	4.1	xxxx	xxxxx	4.1	xxxx	xxxxx
FollowUpTim:	3.5	4.0	3.3	3.5	4.0	3.3	2.2	xxxx	xxxxx	2.2	xxxx	xxxxx
Capacity Module:												
Cnflict Vol:	1102	1416	353	1048	1417	307	615	xxxx	xxxxx	706	xxxx	xxxxx
Potent Cap.:	169	138	649	185	138	695	975	xxxx	xxxxx	901	xxxx	xxxxx
Move Cap.:	144	130	649	125	130	695	975	xxxx	xxxxx	901	xxxx	xxxxx
Volume/Cap:	0.15	0.01	0.29	0.35	0.13	0.01	0.01	xxxx	xxxx	0.05	xxxx	xxxx
Level Of Service Module:												
2Way95thQ:	xxxx	xxxx	xxxxx	xxxx	xxxx	xxxxx	0.0	xxxx	xxxxx	0.2	xxxx	xxxxx
Control Del:	xxxxx	xxxx	xxxxx	xxxxx	xxxx	xxxxx	8.7	xxxx	xxxxx	9.2	xxxx	xxxxx
LOS by Move:	*	*	*	*	*	*	A	*	*	A	*	*
Movement:	LT	LTR	RT	LT	LTR	RT	LT	LTR	RT	LT	LTR	RT
Shared Cap.:	xxxx	466	xxxxx	xxxx	135	xxxxx	xxxx	xxxx	xxxxx	xxxx	xxxx	xxxxx
SharedQueue:	xxxxx	2.3	xxxxx	xxxxx	2.2	xxxxx	xxxxx	xxxx	xxxxx	xxxxx	xxxx	xxxxx
Shrd ConDel:	xxxxx	18.8	xxxxx	xxxxx	54.2	xxxxx	xxxxx	xxxx	xxxxx	xxxxx	xxxx	xxxxx
Shared LOS:	*	C	*	*	F	*	*	*	*	*	*	*
ApproachDel:		18.8			54.2			xxxxxx			xxxxxx	
ApproachLOS:		C			F			*			*	

Note: Queue reported is the number of cars per lane.

Movement	EBL	EBT	EBR	WBL	WBT	WBR	NBL	NBT	NBR	SBL	SBT	SBR
Lane Configurations												
Sign Control		Free			Free			Stop			Stop	
Grade		0%			0%			0%			0%	
Volume (veh/h)	6	586	5	75	655	60	26	6	41	40	4	2
Peak Hour Factor	0.95	0.95	0.95	0.95	0.95	0.95	0.95	0.95	0.95	0.95	0.95	0.95
Hourly flow rate (vph)	6	617	5	79	689	63	27	6	43	42	4	2
Pedestrians												
Lane Width (ft)												
Walking Speed (ft/s)												
Percent Blockage												
Right turn flare (veh)												
Median type								None			None	
Median storage veh)												
Upstream signal (ft)		704			682							
pX, platoon unblocked	0.93			0.98			0.94	0.94	0.98	0.94	0.94	0.93
vC, conflicting volume	753			622			1139	1543	311	1246	1514	376
vC1, stage 1 conf vol												
vC2, stage 2 conf vol												
vCu, unblocked vol	663			589			1014	1442	271	1128	1411	260
tC, single (s)	4.1			4.1			7.5	6.5	6.9	7.5	6.5	6.9
tC, 2 stage (s)												
tF (s)	2.2			2.2			3.5	4.0	3.3	3.5	4.0	3.3
p0 queue free %	99			92			84	95	94	67	96	100
cM capacity (veh/h)	873			973			167	115	716	128	120	695

Direction, Lane #	EB 1	EB 2	WB 1	WB 2	NB 1	SB 1
Volume Total	315	314	424	408	77	48
Volume Left	6	0	79	0	27	42
Volume Right	0	5	0	63	43	2
cSH	873	1700	973	1700	276	132
Volume to Capacity	0.01	0.18	0.08	0.24	0.28	0.37
Queue Length 95th (ft)	1	0	7	0	28	38
Control Delay (s)	0.3	0.0	2.4	0.0	23.0	47.2
Lane LOS	A		A		C	E
Approach Delay (s)	0.1		1.2		23.0	47.2
Approach LOS					C	E

Intersection Summary			
Average Delay	3.3		
Intersection Capacity Utilization	54.2%	ICU Level of Service	A
Analysis Period (min)	15		

Movement	EBT	EBR	WBL	WBT	NBL	NBR
Lane Configurations						
Ideal Flow (vphpl)	1900	1900	1900	1900	1800	1900
Total Lost time (s)	4.0			4.0		
Lane Util. Factor	*1.00			*1.00		
Frt	1.00			1.00		
Flt Protected	1.00			1.00		
Satd. Flow (prot)	3800			3800		
Flt Permitted	1.00			1.00		
Satd. Flow (perm)	3800			3800		
Volume (vph)	396	0	0	198	0	0
Peak-hour factor, PHF	0.95	0.95	0.95	0.95	0.95	0.95
Adj. Flow (vph)	417	0	0	208	0	0
RTOR Reduction (vph)	0	0	0	0	0	0
Lane Group Flow (vph)	417	0	0	208	0	0
Turn Type			Perm			Perm
Protected Phases	4			8	2	
Permitted Phases			8			2
Actuated Green, G (s)	38.0			38.0		
Effective Green, g (s)	38.0			38.0		
Actuated g/C Ratio	0.51			0.51		
Clearance Time (s)	4.0			4.0		
Lane Grp Cap (vph)	1925			1925		
v/s Ratio Prot	c0.11			0.05		
v/s Ratio Perm						
v/c Ratio	0.22			0.11		
Uniform Delay, d1	10.3			9.7		
Progression Factor	1.00			1.00		
Incremental Delay, d2	0.3			0.1		
Delay (s)	10.5			9.8		
Level of Service	B			A		
Approach Delay (s)	10.5			9.8	0.0	
Approach LOS	B			A	A	

Intersection Summary			
HCM Average Control Delay	10.3	HCM Level of Service	B
HCM Volume to Capacity ratio	0.22		
Actuated Cycle Length (s)	75.0	Sum of lost time (s)	37.0
Intersection Capacity Utilization	14.3%	ICU Level of Service	A
Analysis Period (min)	15		

c Critical Lane Group

Movement	EBL	EBT	EBR	WBL	WBT	WBR	NBL	NBT	NBR	SBL	SBT	SBR
Lane Configurations												
Ideal Flow (vphpl)	1800	1900	1900	1800	1900	1900	1900	1900	1900	1900	1900	1900
Total Lost time (s)	4.0	4.0		4.0	4.0			4.0	4.0		4.0	
Lane Util. Factor	1.00	*1.00		1.00	*1.00			*1.00	1.00		*1.00	
Frt	1.00	1.00		1.00	1.00			1.00	1.00		1.00	
Flt Protected	1.00	1.00		1.00	1.00			0.96	1.00		1.00	
Satd. Flow (prot)	1800	3800		1800	3800			3665	1900		3800	
Flt Permitted	1.00	1.00		1.00	1.00			1.00	1.00		1.00	
Satd. Flow (perm)	1800	3800		1800	3800			3800	1900		3800	
Volume (vph)	17	517	45	274	573	13	56	20	197	8	23	8
Peak-hour factor, PHF	0.95	0.95	0.95	0.95	0.95	0.95	0.95	0.95	0.95	0.95	0.95	0.95
Adj. Flow (vph)	18	544	47	288	603	14	59	21	207	8	24	8
RTOR Reduction (vph)	0	9	0	0	2	0	0	0	124	0	5	0
Lane Group Flow (vph)	18	582	0	288	615	0	0	80	83	0	35	0
Turn Type	Perm			Perm			Perm		Perm	Perm		
Protected Phases		4			8			2			6	
Permitted Phases	4			8			2		2	6		
Actuated Green, G (s)	37.0	37.0		37.0	37.0			30.0	30.0		30.0	
Effective Green, g (s)	37.0	37.0		37.0	37.0			30.0	30.0		30.0	
Actuated g/C Ratio	0.49	0.49		0.49	0.49			0.40	0.40		0.40	
Clearance Time (s)	4.0	4.0		4.0	4.0			4.0	4.0		4.0	
Lane Grp Cap (vph)	888	1875		888	1875			1520	760		1520	
v/s Ratio Prot		0.15			c0.16							
v/s Ratio Perm	0.01			0.16				0.02	c0.04		0.01	
v/c Ratio	0.02	0.31		0.32	0.33			0.05	0.11		0.02	
Uniform Delay, d1	9.7	11.4		11.5	11.5			13.8	14.1		13.6	
Progression Factor	1.00	1.00		0.92	0.91			0.94	1.87		1.00	
Incremental Delay, d2	0.0	0.4		0.9	0.5			0.1	0.3		0.0	
Delay (s)	9.8	11.8		11.5	10.9			13.0	26.7		13.7	
Level of Service	A	B		B	B			B	C		B	
Approach Delay (s)		11.7			11.1			22.9			13.7	
Approach LOS		B			B			C			B	

Intersection Summary			
HCM Average Control Delay	13.2	HCM Level of Service	B
HCM Volume to Capacity ratio	0.23		
Actuated Cycle Length (s)	75.0	Sum of lost time (s)	8.0
Intersection Capacity Utilization	51.5%	ICU Level of Service	A
Analysis Period (min)	15		

c Critical Lane Group

Movement	EBL	EBT	EBR	WBL	WBT	WBR	NBL	NBT	NBR	SBL	SBT	SBR
Lane Configurations												
Ideal Flow (vphpl)	1900	1900	1900	1900	1900	1900	1900	1900	1900	1900	1900	1900
Total Lost time (s)		4.0			4.0			4.0			4.0	
Lane Util. Factor		*1.00			*1.00			*1.00			*1.00	
Frt		1.00			1.00			1.00			1.00	
Flt Protected		1.00			1.00			1.00			1.00	
Satd. Flow (prot)		3800			3800			3800			3800	
Flt Permitted		1.00			1.00			1.00			1.00	
Satd. Flow (perm)		3800			3800			3800			3800	
Volume (vph)	131	450	9	38	594	65	7	197	45	102	116	169
Peak-hour factor, PHF	0.95	0.95	0.95	0.95	0.95	0.95	0.95	0.95	0.95	0.95	0.95	0.95
Adj. Flow (vph)	138	474	9	40	625	68	7	207	47	107	122	178
RTOR Reduction (vph)	0	1	0	0	11	0	0	27	0	0	112	0
Lane Group Flow (vph)	0	620	0	0	722	0	0	234	0	0	295	0
Turn Type	Perm			Perm			Perm			Perm		
Protected Phases		4			8			2			6	
Permitted Phases	4			8			2			6		
Actuated Green, G (s)		39.0			39.0			28.0			28.0	
Effective Green, g (s)		39.0			39.0			28.0			28.0	
Actuated g/C Ratio		0.52			0.52			0.37			0.37	
Clearance Time (s)		4.0			4.0			4.0			4.0	
Lane Grp Cap (vph)		1976			1976			1419			1419	
v/s Ratio Prot												
v/s Ratio Perm		0.16			0.19			0.06			0.08	
v/c Ratio		0.31			0.37			0.16			0.21	
Uniform Delay, d1		10.3			10.7			15.7			16.0	
Progression Factor		2.13			1.63			1.00			1.45	
Incremental Delay, d2		0.4			0.5			0.3			0.3	
Delay (s)		22.4			17.9			15.9			23.5	
Level of Service		C			B			B			C	
Approach Delay (s)		22.4			17.9			15.9			23.5	
Approach LOS		C			B			B			C	

Intersection Summary			
HCM Average Control Delay	20.2	HCM Level of Service	C
HCM Volume to Capacity ratio	0.30		
Actuated Cycle Length (s)	75.0	Sum of lost time (s)	8.0
Intersection Capacity Utilization	68.1%	ICU Level of Service	C
Analysis Period (min)	15		

c Critical Lane Group

Movement	EBL	EBT	EBR	WBL	WBT	WBR	NBL	NBT	NBR	SBL	SBT	SBR
Lane Configurations												
Ideal Flow (vphpl)	1900	1900	1900	1800	1900	1900	1900	1900	1900	1900	1900	1800
Total Lost time (s)		4.0		4.0	4.0						4.0	4.0
Lane Util. Factor		*1.00		1.00	*1.00						*1.00	*1.00
Frt		1.00		1.00	1.00						1.00	1.00
Flt Protected		1.00		1.00	1.00						1.00	1.00
Satd. Flow (prot)		3800		1800	3800						3800	3600
Flt Permitted		1.00		1.00	1.00						1.00	1.00
Satd. Flow (perm)		3800		1800	3800						3800	3600
Volume (vph)	0	371	32	115	132	0	0	0	0	340	354	75
Peak-hour factor, PHF	0.95	0.95	0.95	0.95	0.95	0.95	0.95	0.95	0.95	0.95	0.95	0.95
Adj. Flow (vph)	0	391	34	121	139	0	0	0	0	358	373	79
RTOR Reduction (vph)	0	8	0	0	0	0	0	0	0	0	0	51
Lane Group Flow (vph)	0	417	0	121	139	0	0	0	0	0	731	28
Turn Type				Prot						Split		Perm
Protected Phases		4		3	8					6	6	
Permitted Phases												6
Actuated Green, G (s)		25.0		21.0	50.0						32.0	32.0
Effective Green, g (s)		25.0		21.0	50.0						32.0	32.0
Actuated g/C Ratio		0.28		0.23	0.56						0.36	0.36
Clearance Time (s)		4.0		4.0	4.0						4.0	4.0
Lane Grp Cap (vph)		1056		420	2111						1351	1280
v/s Ratio Prot		c0.11		c0.07	0.04						c0.19	
v/s Ratio Perm												0.01
v/c Ratio		0.39		0.29	0.07						0.54	0.02
Uniform Delay, d1		26.4		28.4	9.2						23.1	18.8
Progression Factor		1.00		2.18	0.36						1.00	1.00
Incremental Delay, d2		1.1		1.7	0.1						1.6	0.0
Delay (s)		27.5		63.4	3.4						24.7	18.9
Level of Service		C		E	A						C	B
Approach Delay (s)		27.5			31.3			0.0			24.1	
Approach LOS		C			C			A			C	

Intersection Summary			
HCM Average Control Delay	26.3	HCM Level of Service	C
HCM Volume to Capacity ratio	0.43		
Actuated Cycle Length (s)	90.0	Sum of lost time (s)	12.0
Intersection Capacity Utilization	81.2%	ICU Level of Service	D
Analysis Period (min)	15		

c Critical Lane Group

Movement	EBL	EBT	EBR	WBL	WBT	WBR	NBL	NBT	NBR	SBL	SBT	SBR
Lane Configurations												
Ideal Flow (vphpl)	1900	1900	1900	1700	1900	1900	1900	1900	1900	1800	1900	1900
Total Lost time (s)		4.0	4.0	4.0	4.0					4.0	4.0	4.0
Lane Util. Factor		*1.00	1.00	*1.00	*1.00					*1.00	*1.00	*1.00
Frt		1.00	1.00	1.00	1.00					1.00	0.88	1.00
Flt Protected		1.00	1.00	1.00	1.00					1.00	1.00	1.00
Satd. Flow (prot)		5700	1900	3400	3800					1800	1663	1900
Flt Permitted		1.00	1.00	1.00	1.00					1.00	1.00	1.00
Satd. Flow (perm)		5700	1900	3400	3800					1800	1663	1900
Volume (vph)	0	565	157	886	499	0	0	0	0	105	32	365
Peak-hour factor, PHF	0.95	0.95	0.95	0.95	0.95	0.95	0.95	0.95	0.95	0.95	0.95	0.95
Adj. Flow (vph)	0	595	165	933	525	0	0	0	0	111	34	384
RTOR Reduction (vph)	0	0	132	0	0	0	0	0	0	0	132	170
Lane Group Flow (vph)	0	595	33	933	525	0	0	0	0	111	70	46
Turn Type			Perm	Prot						Split		Perm
Protected Phases		4		3	8					6	6	
Permitted Phases			4									6
Actuated Green, G (s)		15.0	15.0	32.0	51.0					16.0	16.0	16.0
Effective Green, g (s)		15.0	15.0	32.0	51.0					16.0	16.0	16.0
Actuated g/C Ratio		0.20	0.20	0.43	0.68					0.21	0.21	0.21
Clearance Time (s)		4.0	4.0	4.0	4.0					4.0	4.0	4.0
Lane Grp Cap (vph)		1140	380	1451	2584					384	355	405
v/s Ratio Prot		c0.10		c0.27	0.14					c0.06	0.04	
v/s Ratio Perm			0.02									0.02
v/c Ratio		0.52	0.09	0.64	0.20					0.29	0.20	0.11
Uniform Delay, d1		26.8	24.4	17.0	4.5					24.7	24.2	23.8
Progression Factor		0.75	1.01	1.00	1.00					1.00	1.00	1.00
Incremental Delay, d2		1.7	0.4	2.2	0.2					1.9	1.2	0.6
Delay (s)		21.7	25.1	19.2	4.6					26.6	25.5	24.4
Level of Service		C	C	B	A					C	C	C
Approach Delay (s)		22.4			13.9			0.0			25.3	
Approach LOS		C			B			A			C	

Intersection Summary			
HCM Average Control Delay	18.5	HCM Level of Service	B
HCM Volume to Capacity ratio	0.52		
Actuated Cycle Length (s)	75.0	Sum of lost time (s)	12.0
Intersection Capacity Utilization	56.6%	ICU Level of Service	B
Analysis Period (min)	15		

c Critical Lane Group

Movement	EBL	EBT	EBR	WBL	WBT	WBR	NBL	NBT	NBR	SBL	SBT	SBR
Lane Configurations												
Ideal Flow (vphpl)	1800	1900	1900	1900	1900	1900	1900	1900	1900	1900	1900	1900
Total Lost time (s)	4.0	4.0			4.0	4.0		4.0				
Lane Util. Factor	1.00	*1.00			*1.00	1.00		*1.00				
Frt	1.00	1.00			1.00	1.00		1.00				
Flt Protected	1.00	1.00			1.00	1.00		1.00				
Satd. Flow (prot)	1800	3800			5700	1900		3800				
Flt Permitted	1.00	1.00			1.00	1.00		1.00				
Satd. Flow (perm)	1800	3800			5700	1900		3800				
Volume (vph)	302	412	0	0	246	586	7	433	160	0	0	0
Peak-hour factor, PHF	0.95	0.95	0.95	0.95	0.95	0.95	0.95	0.95	0.95	0.95	0.95	0.95
Adj. Flow (vph)	318	434	0	0	259	617	7	456	168	0	0	0
RTOR Reduction (vph)	0	0	0	0	0	90	0	45	0	0	0	0
Lane Group Flow (vph)	318	434	0	0	259	527	0	586	0	0	0	0
Turn Type	Prot					Perm	Split					
Protected Phases	7	4			8		2	2				
Permitted Phases						8						
Actuated Green, G (s)	23.0	62.0			35.0	35.0		20.0				
Effective Green, g (s)	23.0	62.0			35.0	35.0		20.0				
Actuated g/C Ratio	0.26	0.69			0.39	0.39		0.22				
Clearance Time (s)	4.0	4.0			4.0	4.0		4.0				
Lane Grp Cap (vph)	460	2618			2217	739		844				
v/s Ratio Prot	c0.18	0.11			0.05			c0.15				
v/s Ratio Perm						c0.28						
v/c Ratio	0.69	0.17			0.12	0.71		0.69				
Uniform Delay, d1	30.3	4.9			17.6	23.2		32.2				
Progression Factor	0.99	1.10			1.00	1.00		1.13				
Incremental Delay, d2	7.5	0.1			0.1	5.8		4.6				
Delay (s)	37.4	5.5			17.7	29.0		41.1				
Level of Service	D	A			B	C		D				
Approach Delay (s)		19.0			25.7			41.1			0.0	
Approach LOS		B			C			D			A	

Intersection Summary			
HCM Average Control Delay	27.8	HCM Level of Service	C
HCM Volume to Capacity ratio	0.70		
Actuated Cycle Length (s)	90.0	Sum of lost time (s)	12.0
Intersection Capacity Utilization	81.2%	ICU Level of Service	D
Analysis Period (min)	15		

c Critical Lane Group

Movement	EBL	EBT	EBR	WBL	WBT	WBR	NBL	NBT	NBR	SBL	SBT	SBR
Lane Configurations												
Ideal Flow (vphpl)	1700	1900	1900	1900	1900	1900	1800	1900	1900	1900	1900	1900
Total Lost time (s)	4.0	4.0			4.0	4.0	4.0	4.0	4.0			
Lane Util. Factor	*1.00	*1.00			*1.00	1.00	*1.00	*1.00	*1.00			
Frt	1.00	1.00			1.00	1.00	1.00	1.00	1.00			
Flt Protected	1.00	1.00			1.00	1.00	1.00	1.00	1.00			
Satd. Flow (prot)	3400	3800			7600	1900	1800	1900	1900			
Flt Permitted	1.00	1.00			1.00	1.00	1.00	1.00	1.00			
Satd. Flow (perm)	3400	3800			7600	1900	1800	1900	1900			
Volume (vph)	150	531	0	0	1363	444	21	6	400	0	0	0
Peak-hour factor, PHF	0.95	0.95	0.95	0.95	0.95	0.95	0.95	0.95	0.95	0.95	0.95	0.95
Adj. Flow (vph)	158	559	0	0	1435	467	22	6	421	0	0	0
RTOR Reduction (vph)	0	0	0	0	0	0	0	143	156	0	0	0
Lane Group Flow (vph)	158	559	0	0	1435	467	22	64	64	0	0	0
Turn Type	Prot					Free	Split		Prot			
Protected Phases	7	4			8		2	2	2			
Permitted Phases						Free						
Actuated Green, G (s)	19.0	56.0			33.0	90.0	26.0	26.0	26.0			
Effective Green, g (s)	19.0	56.0			33.0	90.0	26.0	26.0	26.0			
Actuated g/C Ratio	0.21	0.62			0.37	1.00	0.29	0.29	0.29			
Clearance Time (s)	4.0	4.0			4.0		4.0	4.0	4.0			
Lane Grp Cap (vph)	718	2364			2787	1900	520	549	549			
v/s Ratio Prot	0.05	0.15			c0.19		0.01	0.03	0.03			
v/s Ratio Perm						c0.25						
v/c Ratio	0.22	0.24			0.51	0.25	0.04	0.12	0.12			
Uniform Delay, d1	29.4	7.5			22.3	0.0	23.0	23.5	23.5			
Progression Factor	1.00	1.00			1.00	1.00	1.00	1.00	1.00			
Incremental Delay, d2	0.7	0.2			0.7	0.3	0.2	0.4	0.4			
Delay (s)	30.1	7.8			22.9	0.3	23.2	24.0	24.0			
Level of Service	C	A			C	A	C	C	C			
Approach Delay (s)		12.7			17.4			23.9			0.0	
Approach LOS		B			B			C			A	

Intersection Summary			
HCM Average Control Delay	17.2	HCM Level of Service	B
HCM Volume to Capacity ratio	0.35		
Actuated Cycle Length (s)	90.0	Sum of lost time (s)	4.0
Intersection Capacity Utilization	56.6%	ICU Level of Service	B
Analysis Period (min)	15		

c Critical Lane Group

Movement	EBL	EBT	EBR	WBL	WBT	WBR	NBL	NBT	NBR	SBL	SBT	SBR
Lane Configurations												
Ideal Flow (vphpl)	1800	1900	1900	1800	1900	1900	1800	1900	1900	1800	1900	1900
Total Lost time (s)	4.0	4.0		4.0	4.0		4.0	4.0		4.0	4.0	
Lane Util. Factor	1.00	*1.00		1.00	*1.00		1.00	*1.00		1.00	*1.00	
Frt	1.00	1.00		1.00	1.00		1.00	1.00		1.00	1.00	
Flt Protected	1.00	1.00		1.00	1.00		1.00	1.00		1.00	1.00	
Satd. Flow (prot)	1800	3800		1800	3800		1800	3800		1800	3800	
Flt Permitted	1.00	1.00		1.00	1.00		1.00	1.00		1.00	1.00	
Satd. Flow (perm)	1800	3800		1800	3800		1800	3800		1800	3800	
Volume (vph)	91	187	157	100	401	6	178	296	91	7	162	98
Peak-hour factor, PHF	0.95	0.95	0.95	0.95	0.95	0.95	0.95	0.95	0.95	0.95	0.95	0.95
Adj. Flow (vph)	96	197	165	105	422	6	187	312	96	7	171	103
RTOR Reduction (vph)	0	119	0	0	1	0	0	43	0	0	70	0
Lane Group Flow (vph)	96	243	0	105	427	0	187	365	0	7	204	0
Turn Type	Prot			Prot			Perm			Perm		
Protected Phases	5	2		1	6			8			4	
Permitted Phases							8			4		
Actuated Green, G (s)	18.0	21.0		18.0	21.0		24.0	24.0		24.0	24.0	
Effective Green, g (s)	18.0	21.0		18.0	21.0		24.0	24.0		24.0	24.0	
Actuated g/C Ratio	0.24	0.28		0.24	0.28		0.32	0.32		0.32	0.32	
Clearance Time (s)	4.0	4.0		4.0	4.0		4.0	4.0		4.0	4.0	
Lane Grp Cap (vph)	432	1064		432	1064		576	1216		576	1216	
v/s Ratio Prot	0.05	0.06		c0.06	c0.11			0.10			0.05	
v/s Ratio Perm							c0.10			0.00		
v/c Ratio	0.22	0.23		0.24	0.40		0.32	0.30		0.01	0.17	
Uniform Delay, d1	22.9	20.8		23.0	21.9		19.4	19.2		17.4	18.3	
Progression Factor	1.00	1.00		1.00	1.00		1.00	1.00		1.00	1.00	
Incremental Delay, d2	1.2	0.5		1.3	1.1		1.5	0.6		0.0	0.3	
Delay (s)	24.1	21.3		24.3	23.0		20.8	19.8		17.4	18.6	
Level of Service	C	C		C	C		C	B		B	B	
Approach Delay (s)		21.9			23.3			20.1			18.6	
Approach LOS		C			C			C			B	

Intersection Summary			
HCM Average Control Delay	21.2	HCM Level of Service	C
HCM Volume to Capacity ratio	0.33		
Actuated Cycle Length (s)	75.0	Sum of lost time (s)	12.0
Intersection Capacity Utilization	48.0%	ICU Level of Service	A
Analysis Period (min)	15		

c Critical Lane Group

Movement	EBL	EBT	EBR	WBL	WBT	WBR	NBL	NBT	NBR	SBL	SBT	SBR
Lane Configurations												
Ideal Flow (vphpl)	1800	1900	1900	1800	1900	1900	1800	1900	1900	1800	1900	1900
Total Lost time (s)	4.0	4.0		4.0	4.0		4.0	4.0		4.0	4.0	
Lane Util. Factor	1.00	*1.00		1.00	*1.00		1.00	*1.00		1.00	*1.00	
Frt	1.00	1.00		1.00	1.00		1.00	1.00		1.00	1.00	
Flt Protected	1.00	1.00		1.00	1.00		1.00	1.00		1.00	1.00	
Satd. Flow (prot)	1800	5700		1800	5700		1800	3800		1800	3800	
Flt Permitted	1.00	1.00		1.00	1.00		1.00	1.00		1.00	1.00	
Satd. Flow (perm)	1800	5700		1800	5700		1800	3800		1800	3800	
Volume (vph)	198	738	55	82	1473	104	390	242	52	72	170	163
Peak-hour factor, PHF	0.95	0.95	0.95	0.95	0.95	0.95	0.95	0.95	0.95	0.95	0.95	0.95
Adj. Flow (vph)	208	777	58	86	1551	109	411	255	55	76	179	172
RTOR Reduction (vph)	0	10	0	0	10	0	0	21	0	0	151	0
Lane Group Flow (vph)	208	825	0	86	1650	0	411	289	0	76	200	0
Turn Type	Prot			Prot			pm+pt			pm+pt		
Protected Phases	7	4		3	8		5	2		1	6	
Permitted Phases							2			6		
Actuated Green, G (s)	16.0	39.0		9.0	32.0		32.0	22.0		17.0	11.0	
Effective Green, g (s)	16.0	39.0		9.0	32.0		32.0	22.0		17.0	11.0	
Actuated g/C Ratio	0.17	0.42		0.10	0.35		0.35	0.24		0.18	0.12	
Clearance Time (s)	4.0	4.0		4.0	4.0		4.0	4.0		4.0	4.0	
Lane Grp Cap (vph)	313	2416		176	1983		626	909		333	454	
v/s Ratio Prot	c0.12	0.14		0.05	c0.29		c0.12	0.08		0.01	0.05	
v/s Ratio Perm							0.11			0.03		
v/c Ratio	0.66	0.34		0.49	0.83		0.66	0.32		0.23	0.44	
Uniform Delay, d1	35.5	17.8		39.3	27.5		26.1	28.8		31.9	37.6	
Progression Factor	1.00	1.00		1.00	1.00		1.00	1.00		1.00	1.00	
Incremental Delay, d2	10.6	0.4		9.4	4.3		5.3	0.9		1.6	3.1	
Delay (s)	46.1	18.2		48.7	31.8		31.4	29.7		33.5	40.7	
Level of Service	D	B		D	C		C	C		C	D	
Approach Delay (s)		23.8			32.6			30.7			39.4	
Approach LOS		C			C			C			D	

Intersection Summary			
HCM Average Control Delay	30.7	HCM Level of Service	C
HCM Volume to Capacity ratio	0.73		
Actuated Cycle Length (s)	92.0	Sum of lost time (s)	12.0
Intersection Capacity Utilization	88.4%	ICU Level of Service	E
Analysis Period (min)	15		

c Critical Lane Group

Movement	EBL	EBT	EBR	WBL	WBT	WBR	NBL	NBT	NBR	SBL	SBT	SBR
Lane Configurations												
Ideal Flow (vphpl)	1800	1900	1900	1800	1900	1900	1800	1900	1900	1800	1900	1900
Total Lost time (s)	4.0	4.0		4.0	4.0		4.0	4.0		4.0	4.0	
Lane Util. Factor	1.00	*1.00		1.00	*1.00		1.00	*1.00		1.00	*1.00	
Frt	1.00	1.00		1.00	1.00		1.00	1.00		1.00	1.00	
Flt Protected	1.00	1.00		1.00	1.00		1.00	1.00		1.00	1.00	
Satd. Flow (prot)	1800	3800		1800	3800		1800	3800		1800	3800	
Flt Permitted	1.00	1.00		1.00	1.00		1.00	1.00		1.00	1.00	
Satd. Flow (perm)	1800	3800		1800	3800		1800	3800		1800	3800	
Volume (vph)	24	441	12	48	649	274	63	277	61	132	118	54
Peak-hour factor, PHF	0.95	0.95	0.95	0.95	0.95	0.95	0.95	0.95	0.95	0.95	0.95	0.95
Adj. Flow (vph)	25	464	13	51	683	288	66	292	64	139	124	57
RTOR Reduction (vph)	0	3	0	0	70	0	0	27	0	0	37	0
Lane Group Flow (vph)	25	474	0	51	901	0	66	329	0	139	144	0
Turn Type	Perm			Perm			Perm			Perm		
Protected Phases		4			8			2			6	
Permitted Phases	4			8			2			6		
Actuated Green, G (s)	41.0	41.0		41.0	41.0		26.0	26.0		26.0	26.0	
Effective Green, g (s)	41.0	41.0		41.0	41.0		26.0	26.0		26.0	26.0	
Actuated g/C Ratio	0.55	0.55		0.55	0.55		0.35	0.35		0.35	0.35	
Clearance Time (s)	4.0	4.0		4.0	4.0		4.0	4.0		4.0	4.0	
Lane Grp Cap (vph)	984	2077		984	2077		624	1317		624	1317	
v/s Ratio Prot		0.12			c0.24			c0.09			0.04	
v/s Ratio Perm	0.01			0.03			0.04			0.08		
v/c Ratio	0.03	0.23		0.05	0.43		0.11	0.25		0.22	0.11	
Uniform Delay, d1	7.8	8.8		7.9	10.1		16.6	17.5		17.3	16.6	
Progression Factor	1.13	0.88		0.47	0.32		1.00	1.00		1.00	1.00	
Incremental Delay, d2	0.0	0.2		0.1	0.6		0.3	0.5		0.8	0.2	
Delay (s)	8.9	8.0		3.8	3.8		17.0	18.0		18.2	16.8	
Level of Service	A	A		A	A		B	B		B	B	
Approach Delay (s)		8.1			3.8			17.8			17.4	
Approach LOS		A			A			B			B	

Intersection Summary			
HCM Average Control Delay	9.3	HCM Level of Service	A
HCM Volume to Capacity ratio	0.36		
Actuated Cycle Length (s)	75.0	Sum of lost time (s)	8.0
Intersection Capacity Utilization	60.7%	ICU Level of Service	B
Analysis Period (min)	15		

c Critical Lane Group

Movement	EBL	EBT	EBR	WBL	WBT	WBR	NBL	NBT	NBR	SBL	SBT	SBR
Lane Configurations												
Sign Control		Stop			Stop			Free			Free	
Grade		0%			0%			0%			0%	
Volume (veh/h)	4	0	4	0	0	0	0	257	0	0	241	0
Peak Hour Factor	0.95	0.95	0.95	0.95	0.95	0.95	0.95	0.95	0.95	0.95	0.95	0.95
Hourly flow rate (vph)	4	0	4	0	0	0	0	271	0	0	254	0
Pedestrians												
Lane Width (ft)												
Walking Speed (ft/s)												
Percent Blockage												
Right turn flare (veh)												
Median type		None			None							
Median storage veh)												
Upstream signal (ft)											930	
pX, platoon unblocked												
vC, conflicting volume	389	524	127	402	524	135	254			271		
vC1, stage 1 conf vol												
vC2, stage 2 conf vol												
vCu, unblocked vol	389	524	127	402	524	135	254			271		
tC, single (s)	7.5	6.5	6.9	7.5	6.5	6.9	4.1			4.1		
tC, 2 stage (s)												
tF (s)	3.5	4.0	3.3	3.5	4.0	3.3	2.2			2.2		
p0 queue free %	99	100	100	100	100	100	100			100		
cM capacity (veh/h)	549	461	906	536	461	895	1323			1305		

Direction, Lane #	EB 1	WB 1	NB 1	NB 2	SB 1	SB 2
Volume Total	8	0	135	135	127	127
Volume Left	4	0	0	0	0	0
Volume Right	4	0	0	0	0	0
cSH	684	1700	1323	1700	1305	1700
Volume to Capacity	0.01	0.00	0.00	0.08	0.00	0.07
Queue Length 95th (ft)	1	0	0	0	0	0
Control Delay (s)	10.3	0.0	0.0	0.0	0.0	0.0
Lane LOS	B	A				
Approach Delay (s)	10.3	0.0	0.0		0.0	
Approach LOS	B	A				

Intersection Summary			
Average Delay	0.2		
Intersection Capacity Utilization	17.1%	ICU Level of Service	A
Analysis Period (min)	15		

Movement	EBL	EBT	EBR	WBL	WBT	WBR	NBL	NBT	NBR	SBL	SBT	SBR
Lane Configurations												
Ideal Flow (vphpl)	1800	1900	1900	1800	1900	1900	1800	1900	1900	1800	1900	1900
Total Lost time (s)	4.0	4.0		4.0	4.0		4.0	4.0		4.0	4.0	4.0
Lane Util. Factor	1.00	*1.00		1.00	*1.00		1.00	1.00		1.00	*1.00	1.00
Frt	1.00	1.00		1.00	1.00		1.00	1.00		1.00	1.00	1.00
Flt Protected	1.00	1.00		1.00	1.00		1.00	1.00		1.00	1.00	1.00
Satd. Flow (prot)	1800	3800		1800	5700		1800	1900		1800	1900	1900
Flt Permitted	1.00	1.00		1.00	1.00		1.00	1.00		1.00	1.00	1.00
Satd. Flow (perm)	1800	3800		1800	5700		1800	1900		1800	1900	1900
Volume (vph)	157	627	65	124	1168	33	141	439	130	41	336	205
Peak-hour factor, PHF	0.95	0.95	0.95	0.95	0.95	0.95	0.95	0.95	0.95	0.95	0.95	0.95
Adj. Flow (vph)	165	660	68	131	1229	35	148	462	137	43	354	216
RTOR Reduction (vph)	0	11	0	0	5	0	0	14	0	0	0	138
Lane Group Flow (vph)	165	717	0	131	1259	0	148	585	0	43	354	78
Turn Type	Prot			Prot			pm+pt			pm+pt		Perm
Protected Phases	7	4		3	8		5	2		1	6	
Permitted Phases							2			6		6
Actuated Green, G (s)	8.0	18.0		8.0	18.0		33.0	27.0		33.0	27.0	27.0
Effective Green, g (s)	8.0	18.0		8.0	18.0		33.0	27.0		33.0	27.0	27.0
Actuated g/C Ratio	0.11	0.24		0.11	0.24		0.44	0.36		0.44	0.36	0.36
Clearance Time (s)	4.0	4.0		4.0	4.0		4.0	4.0		4.0	4.0	4.0
Lane Grp Cap (vph)	192	912		192	1368		888	684		888	684	684
v/s Ratio Prot	c0.09	0.19		0.07	c0.22		c0.01	c0.31		0.00	0.19	
v/s Ratio Perm							0.07			0.02		0.04
v/c Ratio	0.86	0.79		0.68	0.92		0.17	0.86		0.05	0.52	0.11
Uniform Delay, d1	32.9	26.7		32.3	27.8		13.2	22.2		14.7	18.9	16.0
Progression Factor	1.00	1.00		1.00	1.00		1.12	0.80		0.44	0.73	1.46
Incremental Delay, d2	36.4	6.8		17.9	11.5		0.2	7.7		0.1	2.3	0.3
Delay (s)	69.3	33.5		50.2	39.3		15.1	25.4		6.5	16.2	23.7
Level of Service	E	C		D	D		B	C		A	B	C
Approach Delay (s)		40.1			40.4			23.3			18.2	
Approach LOS		D			D			C			B	

Intersection Summary			
HCM Average Control Delay	33.1	HCM Level of Service	C
HCM Volume to Capacity ratio	0.81		
Actuated Cycle Length (s)	75.0	Sum of lost time (s)	16.0
Intersection Capacity Utilization	80.2%	ICU Level of Service	D
Analysis Period (min)	15		

c Critical Lane Group

Movement	EBL	EBT	EBR	WBL	WBT	WBR	NBL	NBT	NBR	SBL	SBT	SBR
Lane Configurations												
Ideal Flow (vphpl)	1800	1900	1900	1800	1900	1900	1800	1900	1900	1800	1900	1900
Total Lost time (s)	4.0	4.0		4.0	4.0		4.0	4.0		4.0	4.0	
Lane Util. Factor	1.00	*1.00		1.00	*1.00		1.00	*1.00		1.00	*1.00	
Frt	1.00	1.00		1.00	1.00		1.00	1.00		1.00	1.00	
Flt Protected	1.00	1.00		1.00	1.00		1.00	1.00		1.00	1.00	
Satd. Flow (prot)	1800	3800		1800	3800		1800	1900		1800	1900	
Flt Permitted	1.00	1.00		1.00	1.00		1.00	1.00		1.00	1.00	
Satd. Flow (perm)	1800	3800		1800	3800		1800	1900		1800	1900	
Volume (vph)	32	437	89	117	785	53	89	685	69	48	442	62
Peak-hour factor, PHF	0.95	0.95	0.95	0.95	0.95	0.95	0.95	0.95	0.95	0.95	0.95	0.95
Adj. Flow (vph)	34	460	94	123	826	56	94	721	73	51	465	65
RTOR Reduction (vph)	0	25	0	0	7	0	0	5	0	0	7	0
Lane Group Flow (vph)	34	529	0	123	875	0	94	789	0	51	523	0
Turn Type	Perm			Perm			pm+pt			pm+pt		
Protected Phases		4			8		5	2		1	6	
Permitted Phases	4			8			2			6		
Actuated Green, G (s)	20.0	20.0		20.0	20.0		43.0	37.0		43.0	37.0	
Effective Green, g (s)	20.0	20.0		20.0	20.0		43.0	37.0		43.0	37.0	
Actuated g/C Ratio	0.27	0.27		0.27	0.27		0.57	0.49		0.57	0.49	
Clearance Time (s)	4.0	4.0		4.0	4.0		4.0	4.0		4.0	4.0	
Lane Grp Cap (vph)	480	1013		480	1013		1128	937		1128	937	
v/s Ratio Prot		0.14			c0.23		c0.01	c0.42		0.00	0.28	
v/s Ratio Perm	0.02			0.07			0.05			0.02		
v/c Ratio	0.07	0.52		0.26	0.86		0.08	0.84		0.05	0.56	
Uniform Delay, d1	20.6	23.4		21.6	26.2		8.2	16.5		11.6	13.3	
Progression Factor	1.04	1.00		0.79	0.82		1.00	1.00		1.24	0.95	
Incremental Delay, d2	0.3	1.9		1.3	9.6		0.1	9.1		0.1	2.0	
Delay (s)	21.7	25.3		18.3	31.1		8.3	25.5		14.4	14.7	
Level of Service	C	C		B	C		A	C		B	B	
Approach Delay (s)		25.1			29.6			23.7			14.7	
Approach LOS		C			C			C			B	

Intersection Summary			
HCM Average Control Delay	24.2	HCM Level of Service	C
HCM Volume to Capacity ratio	0.78		
Actuated Cycle Length (s)	75.0	Sum of lost time (s)	12.0
Intersection Capacity Utilization	83.6%	ICU Level of Service	E
Analysis Period (min)	15		

c Critical Lane Group

Movement	EBL	EBT	EBR	WBL	WBT	WBR	NBL	NBT	NBR	SBL	SBT	SBR
Lane Configurations												
Ideal Flow (vphpl)	1800	1900	1900	1800	1900	1900	1800	1900	1900	1800	1900	1900
Total Lost time (s)	4.0	4.0		4.0	4.0		4.0	4.0		4.0	4.0	
Lane Util. Factor	1.00	*1.00		1.00	*1.00		1.00	*1.00		1.00	*1.00	
Frt	1.00	1.00		1.00	1.00		1.00	1.00		1.00	1.00	
Flt Protected	1.00	1.00		1.00	1.00		1.00	1.00		1.00	1.00	
Satd. Flow (prot)	1800	3800		1800	3800		1800	3800		1800	3800	
Flt Permitted	1.00	1.00		1.00	1.00		1.00	1.00		1.00	1.00	
Satd. Flow (perm)	1800	3800		1800	3800		1800	3800		1800	3800	
Volume (vph)	22	396	24	50	480	52	51	542	132	50	291	39
Peak-hour factor, PHF	0.95	0.95	0.95	0.95	0.95	0.95	0.95	0.95	0.95	0.95	0.95	0.95
Adj. Flow (vph)	23	417	25	53	505	55	54	571	139	53	306	41
RTOR Reduction (vph)	0	6	0	0	12	0	0	31	0	0	15	0
Lane Group Flow (vph)	23	436	0	53	548	0	54	679	0	53	332	0
Turn Type	Perm			Perm			Perm			Perm		
Protected Phases		4			8			2			6	
Permitted Phases	4			8			2			6		
Actuated Green, G (s)	33.0	33.0		33.0	33.0		34.0	34.0		34.0	34.0	
Effective Green, g (s)	33.0	33.0		33.0	33.0		34.0	34.0		34.0	34.0	
Actuated g/C Ratio	0.44	0.44		0.44	0.44		0.45	0.45		0.45	0.45	
Clearance Time (s)	4.0	4.0		4.0	4.0		4.0	4.0		4.0	4.0	
Lane Grp Cap (vph)	792	1672		792	1672		816	1723		816	1723	
v/s Ratio Prot		0.11			c0.14			c0.18			0.09	
v/s Ratio Perm	0.01			0.03			0.03			0.03		
v/c Ratio	0.03	0.26		0.07	0.33		0.07	0.39		0.06	0.19	
Uniform Delay, d1	11.9	13.3		12.1	13.7		11.6	13.6		11.5	12.3	
Progression Factor	0.35	0.39		1.00	1.00		1.00	1.00		1.00	1.00	
Incremental Delay, d2	0.1	0.3		0.2	0.5		0.2	0.7		0.2	0.2	
Delay (s)	4.2	5.4		12.3	14.3		11.7	14.3		11.7	12.5	
Level of Service	A	A		B	B		B	B		B	B	
Approach Delay (s)		5.4			14.1			14.1			12.4	
Approach LOS		A			B			B			B	

Intersection Summary			
HCM Average Control Delay	12.0	HCM Level of Service	B
HCM Volume to Capacity ratio	0.36		
Actuated Cycle Length (s)	75.0	Sum of lost time (s)	8.0
Intersection Capacity Utilization	54.1%	ICU Level of Service	A
Analysis Period (min)	15		

c Critical Lane Group

Movement	EBL	EBT	EBR	WBL	WBT	WBR	NBL	NBT	NBR	SBL	SBT	SBR
Lane Configurations												
Ideal Flow (vphpl)	1800	1900	1900	1800	1900	1900	1800	1900	1900	1800	1900	1900
Total Lost time (s)	4.0	4.0	4.0	4.0	4.0		4.0	4.0		4.0	4.0	4.0
Lane Util. Factor	1.00	*1.00	1.00	1.00	*1.00		1.00	*1.00		1.00	*1.00	1.00
Frt	1.00	1.00	1.00	1.00	1.00		1.00	1.00		1.00	1.00	1.00
Flt Protected	1.00	1.00	1.00	1.00	1.00		1.00	1.00		1.00	1.00	1.00
Satd. Flow (prot)	1800	3800	1900	1800	3800		1800	3800		1800	3800	1900
Flt Permitted	1.00	1.00	1.00	1.00	1.00		1.00	1.00		1.00	1.00	1.00
Satd. Flow (perm)	1800	3800	1900	1800	3800		1800	3800		1800	3800	1900
Volume (vph)	271	701	340	19	1266	49	429	518	15	15	134	244
Peak-hour factor, PHF	0.95	0.95	0.95	0.95	0.95	0.95	0.95	0.95	0.95	0.95	0.95	0.95
Adj. Flow (vph)	285	738	358	20	1333	52	452	545	16	16	141	257
RTOR Reduction (vph)	0	0	183	0	3	0	0	2	0	0	0	208
Lane Group Flow (vph)	285	738	175	20	1382	0	452	559	0	16	141	49
Turn Type	Prot		Perm	Prot			pm+pt			pm+pt		Perm
Protected Phases	7	4		3	8		5	2		1	6	
Permitted Phases			4				2			6		6
Actuated Green, G (s)	16.0	44.0	44.0	6.0	34.0		25.0	18.0		23.0	17.0	17.0
Effective Green, g (s)	16.0	44.0	44.0	6.0	34.0		25.0	18.0		23.0	17.0	17.0
Actuated g/C Ratio	0.18	0.49	0.49	0.07	0.38		0.28	0.20		0.26	0.19	0.19
Clearance Time (s)	4.0	4.0	4.0	4.0	4.0		4.0	4.0		4.0	4.0	4.0
Lane Grp Cap (vph)	320	1858	929	120	1436		500	760		460	718	359
v/s Ratio Prot	c0.16	0.19		0.01	c0.36		c0.07	0.15		0.00	0.04	
v/s Ratio Perm			0.09				0.18			0.01		0.03
v/c Ratio	0.89	0.40	0.19	0.17	0.96		0.90	0.73		0.03	0.20	0.14
Uniform Delay, d1	36.1	14.6	12.9	39.6	27.4		31.7	33.8		25.5	30.7	30.4
Progression Factor	1.00	1.00	1.00	1.00	1.00		1.00	1.00		1.00	1.00	1.00
Incremental Delay, d2	28.9	0.6	0.4	3.0	16.3		22.3	6.2		0.1	0.6	0.8
Delay (s)	65.0	15.2	13.4	42.6	43.7		54.1	40.0		25.7	31.4	31.2
Level of Service	E	B	B	D	D		D	D		C	C	C
Approach Delay (s)		25.0			43.7			46.3			31.0	
Approach LOS		C			D			D			C	

Intersection Summary			
HCM Average Control Delay	36.9	HCM Level of Service	D
HCM Volume to Capacity ratio	0.89		
Actuated Cycle Length (s)	90.0	Sum of lost time (s)	12.0
Intersection Capacity Utilization	94.5%	ICU Level of Service	F
Analysis Period (min)	15		

c Critical Lane Group

Movement	EBL	EBT	WBT	WBR	SBL	SBR
Lane Configurations						
Sign Control		Free	Free		Stop	
Grade		0%	0%		0%	
Volume (veh/h)	43	420	665	49	36	88
Peak Hour Factor	0.95	0.95	0.95	0.95	0.95	0.95
Hourly flow rate (vph)	45	442	700	52	38	93
Pedestrians						
Lane Width (ft)						
Walking Speed (ft/s)						
Percent Blockage						
Right turn flare (veh)						
Median type					None	
Median storage veh)						
Upstream signal (ft)		675	695			
pX, platoon unblocked	0.85				0.85	0.85
vC, conflicting volume	752				1037	376
vC1, stage 1 conf vol	0					
vC2, stage 2 conf vol	0					
vCu, unblocked vol	538				873	98
tC, single (s)	4.1				6.8	6.9
tC, 2 stage (s)	3.1					
tF (s)	2.2				3.5	3.3
p0 queue free %	95				84	89
cM capacity (veh/h)	858				237	807

Direction, Lane #	EB 1	EB 2	WB 1	WB 2	SB 1	SB 2
Volume Total	193	295	467	285	38	93
Volume Left	45	0	0	0	38	0
Volume Right	0	0	0	52	0	93
cSH	858	1700	1700	1700	237	807
Volume to Capacity	0.05	0.17	0.27	0.17	0.16	0.11
Queue Length 95th (ft)	4	0	0	0	14	10
Control Delay (s)	2.6	0.0	0.0	0.0	23.0	10.0
Lane LOS	A				C	B
Approach Delay (s)	1.0		0.0		13.8	
Approach LOS					B	

Intersection Summary			
Average Delay	1.7		
Intersection Capacity Utilization	46.1%	ICU Level of Service	A
Analysis Period (min)	15		

Movement	EBL	EBT	EBR	WBL	WBT	WBR	NBL	NBT	NBR	SBL	SBT	SBR
Lane Configurations												
Ideal Flow (vphpl)	1800	1900	1900	1800	1900	1900	1800	1900	1900	1800	1900	1900
Total Lost time (s)	4.0	4.0		4.0	4.0		4.0	4.0		4.0	4.0	
Lane Util. Factor	1.00	*1.00		1.00	*1.00		1.00	1.00		1.00	1.00	
Frt	1.00	1.00		1.00	1.00		1.00	1.00		1.00	1.00	
Flt Protected	1.00	1.00		1.00	1.00		1.00	1.00		1.00	1.00	
Satd. Flow (prot)	1800	3800		1800	3800		1800	1900		1800	1900	
Flt Permitted	1.00	1.00		1.00	1.00		1.00	1.00		1.00	1.00	
Satd. Flow (perm)	1800	3800		1800	3800		1800	1900		1800	1900	
Volume (vph)	57	561	68	72	929	60	132	452	72	68	332	75
Peak-hour factor, PHF	0.95	0.95	0.95	0.95	0.95	0.95	0.95	0.95	0.95	0.95	0.95	0.95
Adj. Flow (vph)	60	591	72	76	978	63	139	476	76	72	349	79
RTOR Reduction (vph)	0	13	0	0	7	0	0	7	0	0	11	0
Lane Group Flow (vph)	60	650	0	76	1034	0	139	545	0	72	417	0
Turn Type	Perm			Perm			Perm			Perm		
Protected Phases		4			8			2			6	
Permitted Phases	4			8			2			6		
Actuated Green, G (s)	32.0	32.0		32.0	32.0		35.0	35.0		35.0	35.0	
Effective Green, g (s)	32.0	32.0		32.0	32.0		35.0	35.0		35.0	35.0	
Actuated g/C Ratio	0.43	0.43		0.43	0.43		0.47	0.47		0.47	0.47	
Clearance Time (s)	4.0	4.0		4.0	4.0		4.0	4.0		4.0	4.0	
Lane Grp Cap (vph)	768	1621		768	1621		840	887		840	887	
v/s Ratio Prot		0.17			c0.27			c0.29			0.22	
v/s Ratio Perm	0.03			0.04			0.08			0.04		
v/c Ratio	0.08	0.40		0.10	0.64		0.17	0.61		0.09	0.47	
Uniform Delay, d1	12.8	14.9		12.9	16.9		11.6	14.9		11.1	13.7	
Progression Factor	1.00	1.00		1.00	1.00		0.84	0.72		1.00	1.00	
Incremental Delay, d2	0.2	0.7		0.3	1.9		0.3	2.5		0.2	1.8	
Delay (s)	13.0	15.6		13.1	18.9		10.0	13.2		11.3	15.5	
Level of Service	B	B		B	B		B	B		B	B	
Approach Delay (s)		15.4			18.5			12.6			14.9	
Approach LOS		B			B			B			B	

Intersection Summary			
HCM Average Control Delay	15.8	HCM Level of Service	B
HCM Volume to Capacity ratio	0.63		
Actuated Cycle Length (s)	75.0	Sum of lost time (s)	8.0
Intersection Capacity Utilization	76.4%	ICU Level of Service	D
Analysis Period (min)	15		

c Critical Lane Group

Movement	EBL	EBT	EBR	WBL	WBT	WBR	NBL	NBT	NBR	SBL	SBT	SBR
Lane Configurations												
Ideal Flow (vphpl)	1800	1900	1900	1800	1900	1900	1800	1900	1900	1800	1900	1900
Total Lost time (s)	4.0	4.0		4.0	4.0		4.0	4.0		4.0	4.0	
Lane Util. Factor	1.00	*1.00		1.00	*1.00		1.00	1.00		1.00	1.00	
Frt	1.00	1.00		1.00	1.00		1.00	1.00		1.00	1.00	
Flt Protected	1.00	1.00		1.00	1.00		1.00	1.00		1.00	1.00	
Satd. Flow (prot)	1800	3800		1800	3800		1800	1900		1800	1900	
Flt Permitted	1.00	1.00		1.00	1.00		1.00	1.00		1.00	1.00	
Satd. Flow (perm)	1800	3800		1800	3800		1800	1900		1800	1900	
Volume (vph)	19	80	65	34	169	57	57	586	82	10	457	51
Peak-hour factor, PHF	0.95	0.95	0.95	0.95	0.95	0.95	0.95	0.95	0.95	0.95	0.95	0.95
Adj. Flow (vph)	20	84	68	36	178	60	60	617	86	11	481	54
RTOR Reduction (vph)	0	53	0	0	47	0	0	7	0	0	5	0
Lane Group Flow (vph)	20	99	0	36	191	0	60	696	0	11	530	0
Turn Type	pm+pt			pm+pt			pm+pt			Perm		
Protected Phases	7	4		3	8		5	2			6	
Permitted Phases	4			8			2			6		
Actuated Green, G (s)	22.0	16.0		22.0	16.0		41.0	41.0		31.0	31.0	
Effective Green, g (s)	22.0	16.0		22.0	16.0		41.0	41.0		31.0	31.0	
Actuated g/C Ratio	0.29	0.21		0.29	0.21		0.55	0.55		0.41	0.41	
Clearance Time (s)	4.0	4.0		4.0	4.0		4.0	4.0		4.0	4.0	
Lane Grp Cap (vph)	624	811		624	811		984	1039		744	785	
v/s Ratio Prot	0.00	0.03		c0.00	c0.05		0.00	c0.37			0.28	
v/s Ratio Perm	0.01			0.02			0.03			0.01		
v/c Ratio	0.03	0.12		0.06	0.24		0.06	0.67		0.01	0.67	
Uniform Delay, d1	18.9	23.8		19.1	24.4		10.3	12.2		13.0	17.9	
Progression Factor	1.00	1.00		1.00	1.00		1.02	0.79		0.88	0.74	
Incremental Delay, d2	0.1	0.3		0.2	0.7		0.1	2.2		0.0	4.4	
Delay (s)	19.0	24.1		19.3	25.1		10.6	11.9		11.5	17.7	
Level of Service	B	C		B	C		B	B		B	B	
Approach Delay (s)		23.5			24.3			11.8			17.5	
Approach LOS		C			C			B			B	

Intersection Summary			
HCM Average Control Delay	16.7	HCM Level of Service	B
HCM Volume to Capacity ratio	0.50		
Actuated Cycle Length (s)	75.0	Sum of lost time (s)	12.0
Intersection Capacity Utilization	62.3%	ICU Level of Service	B
Analysis Period (min)	15		

c Critical Lane Group

Movement	EBL	EBT	EBR	EBR2	WBL2	WBL	WBT	WBR	NBL2	NBL	NBT	NBR
Lane Configurations												
Ideal Flow (vphpl)	1800	1900	1900	1900	1700	1700	1900	1900	1800	1800	1900	1900
Total Lost time (s)	4.0	4.0	4.0			4.0	4.0			4.0	4.0	4.0
Lane Util. Factor	1.00	*1.00	*1.00			*1.00	*1.00			*1.00	*1.00	1.00
Frt	1.00	1.00	1.00			1.00	1.00			1.00	1.00	1.00
Flt Protected	1.00	1.00	1.00			1.00	1.00			1.00	1.00	1.00
Satd. Flow (prot)	1800	3800	1900			3400	3800			1800	3800	1900
Flt Permitted	1.00	1.00	1.00			1.00	1.00			1.00	1.00	1.00
Satd. Flow (perm)	1800	3800	1900			3400	3800			1800	3800	1900
Volume (vph)	150	466	114	8	112	355	633	40	53	216	711	147
Peak-hour factor, PHF	0.95	0.95	0.95	0.95	0.95	0.95	0.95	0.95	0.95	0.95	0.95	0.95
Adj. Flow (vph)	158	491	120	8	118	374	666	42	56	227	748	155
RTOR Reduction (vph)	0	0	2	0	0	0	5	0	0	0	0	110
Lane Group Flow (vph)	158	491	126	0	0	492	703	0	0	172	859	45
Turn Type	Prot		Perm		Prot	Prot			Prot	Prot		Perm
Protected Phases	5	2			1	1	6		3	3	8	
Permitted Phases			2									8
Actuated Green, G (s)	9.0	18.0	18.0			14.0	23.0			10.0	36.0	26.0
Effective Green, g (s)	9.0	18.0	18.0			14.0	23.0			10.0	36.0	26.0
Actuated g/C Ratio	0.10	0.20	0.20			0.16	0.26			0.11	0.40	0.29
Clearance Time (s)	4.0	4.0	4.0			4.0	4.0			4.0	4.0	4.0
Lane Grp Cap (vph)	180	760	380			529	971			200	1520	549
v/s Ratio Prot	0.09	0.13				c0.14	c0.18			c0.10	c0.06	
v/s Ratio Perm			0.07								0.16	0.02
v/c Ratio	0.88	0.65	0.33			0.93	0.72			0.86	0.57	0.08
Uniform Delay, d1	40.0	33.1	30.8			37.5	30.6			39.3	20.9	23.3
Progression Factor	1.00	1.00	1.00			1.00	1.00			1.00	1.00	1.00
Incremental Delay, d2	41.1	4.2	2.3			25.1	4.7			35.4	1.5	0.3
Delay (s)	81.1	37.3	33.2			62.7	35.3			74.7	22.5	23.6
Level of Service	F	D	C			E	D			E	C	C
Approach Delay (s)		45.5					46.5				30.2	
Approach LOS		D					D				C	

Intersection Summary			
HCM Average Control Delay	44.6	HCM Level of Service	D
HCM Volume to Capacity ratio	0.84		
Actuated Cycle Length (s)	90.0	Sum of lost time (s)	16.0
Intersection Capacity Utilization	99.2%	ICU Level of Service	F
Analysis Period (min)	15		

c Critical Lane Group

Movement	SBL	SBT	SBR	SBR2	NEL2	NEL	NER	NER2
Lane Configurations								
Ideal Flow (vphpl)	1800	1900	1900	1900	1700	1700	1800	1800
Total Lost time (s)	4.0	4.0	4.0			4.0	4.0	
Lane Util. Factor	1.00	*1.00	*1.00			*1.00	*1.00	
Frt	1.00	1.00	1.00			1.00	1.00	
Flt Protected	1.00	1.00	1.00			1.00	1.00	
Satd. Flow (prot)	1800	1900	1900			3400	3600	
Flt Permitted	1.00	1.00	1.00			1.00	1.00	
Satd. Flow (perm)	1800	1900	1900			3400	3600	
Volume (vph)	31	411	130	92	15	145	179	45
Peak-hour factor, PHF	0.95	0.95	0.95	0.95	0.95	0.95	0.95	0.95
Adj. Flow (vph)	33	433	137	97	16	153	188	47
RTOR Reduction (vph)	0	0	28	0	0	0	26	0
Lane Group Flow (vph)	33	433	206	0	0	169	209	0
Turn Type	Prot		Perm		Split		Perm	
Protected Phases	7	4			9	9		
Permitted Phases			4				9	
Actuated Green, G (s)	6.0	22.0	22.0			6.0	6.0	
Effective Green, g (s)	6.0	22.0	22.0			6.0	6.0	
Actuated g/C Ratio	0.07	0.24	0.24			0.07	0.07	
Clearance Time (s)	4.0	4.0	4.0			4.0	4.0	
Lane Grp Cap (vph)	120	464	464			227	240	
v/s Ratio Prot	0.02	c0.23				0.05		
v/s Ratio Perm			0.11				c0.06	
v/c Ratio	0.28	0.93	0.44			0.74	0.87	
Uniform Delay, d1	39.9	33.3	28.8			41.2	41.6	
Progression Factor	1.00	1.00	1.00			1.00	1.00	
Incremental Delay, d2	5.6	28.0	3.1			19.7	32.4	
Delay (s)	45.5	61.3	31.9			61.0	74.0	
Level of Service	D	E	C			E	E	
Approach Delay (s)		50.7				68.5		
Approach LOS		D				E		

Intersection Summary

FORECAST YEAR (2035) WITH PROJECT CONDITIONS

AM PEAK HOUR

Movement	EBL	EBR	NBL	NBT	SBT	SBR
Lane Configurations						
Sign Control	Stop			Free	Free	
Grade	0%			0%	0%	
Volume (veh/h)	9	9	11	7	10	13
Peak Hour Factor	0.95	0.95	0.95	0.95	0.95	0.95
Hourly flow rate (vph)	9	9	12	7	11	14
Pedestrians						
Lane Width (ft)						
Walking Speed (ft/s)						
Percent Blockage						
Right turn flare (veh)						
Median type	None					
Median storage veh)						
Upstream signal (ft)						
pX, platoon unblocked						
vC, conflicting volume	48	17	24			
vC1, stage 1 conf vol						
vC2, stage 2 conf vol						
vCu, unblocked vol	48	17	24			
tC, single (s)	6.4	6.2	4.1			
tC, 2 stage (s)						
tF (s)	3.5	3.3	2.2			
p0 queue free %	99	99	99			
cM capacity (veh/h)	960	1067	1604			

Direction, Lane #	EB 1	NB 1	NB 2	SB 1
Volume Total	19	12	7	24
Volume Left	9	12	0	0
Volume Right	9	0	0	14
cSH	1011	1604	1700	1700
Volume to Capacity	0.02	0.01	0.00	0.01
Queue Length 95th (ft)	1	1	0	0
Control Delay (s)	8.6	7.3	0.0	0.0
Lane LOS	A	A		
Approach Delay (s)	8.6	4.4		0.0
Approach LOS	A			

Intersection Summary			
Average Delay	4.0		
Intersection Capacity Utilization	17.3%	ICU Level of Service	A
Analysis Period (min)	15		

Year 2035 Build AM Peak Hour
City of San Bernardino
Downtown San Bernardino Passenger Rail Project (With 3rd St Closure)

Level Of Service Computation Report
2000 HCM 4-Way Stop Method (Base Volume Alternative)

Intersection #2 K St and 2nd St

Cycle (sec):	100	Critical Vol./Cap.(X):	0.607
Loss Time (sec):	0 (Y+R=4.0 sec)	Average Delay (sec/veh):	15.4
Optimal Cycle:	0	Level Of Service:	C

Street Name:	K St						2nd St					
Approach:	North Bound			South Bound			East Bound			West Bound		
Movement:	L	T	R	L	T	R	L	T	R	L	T	R
Control:	Stop Sign			Stop Sign			Stop Sign			Stop Sign		
Rights:	Include			Include			Include			Include		
Min. Green:	0	0	0	0	0	0	0	0	0	0	0	0
Lanes:	0 0	1! 0	0	1 0	0 1	0	1 0	1 1	0	1 0	1 1	0
Volume Module:												
Base Vol:	23	3	152	19	7	11	5	604	20	125	312	16
Growth Adj:	1.00	1.00	1.00	1.00	1.00	1.00	1.00	1.00	1.00	1.00	1.00	1.00
Initial Bse:	23	3	152	19	7	11	5	604	20	125	312	16
User Adj:	1.00	1.00	1.00	1.00	1.00	1.00	1.00	1.00	1.00	1.00	1.00	1.00
PHF Adj:	0.94	0.94	0.94	0.94	0.94	0.94	0.94	0.94	0.94	0.94	0.94	0.94
PHF Volume:	24	3	162	20	7	12	5	643	21	133	332	17
Reduct Vol:	0	0	0	0	0	0	0	0	0	0	0	0
Reduced Vol:	24	3	162	20	7	12	5	643	21	133	332	17
PCE Adj:	1.00	1.00	1.00	1.00	1.00	1.00	1.00	1.00	1.00	1.00	1.00	1.00
MLF Adj:	1.00	1.00	1.00	1.00	1.00	1.00	1.00	1.00	1.00	1.00	1.00	1.00
FinalVolume:	24	3	162	20	7	12	5	643	21	133	332	17
Saturation Flow Module:												
Adjustment:	1.00	1.00	1.00	1.00	1.00	1.00	1.00	1.00	1.00	1.00	1.00	1.00
Lanes:	0.13	0.02	0.85	1.00	0.39	0.61	1.00	1.94	0.06	1.00	1.90	0.10
Final Sat.:	69	9	453	410	178	280	502	1058	35	477	977	50
Capacity Analysis Module:												
Vol/Sat:	0.36	0.36	0.36	0.05	0.04	0.04	0.01	0.61	0.61	0.28	0.34	0.34
Crit Moves:		****		****				****			****	
Delay/Veh:	12.9	12.9	12.9	11.2	10.1	10.1	9.8	18.4	18.2	12.7	12.8	12.7
Delay Adj:	1.00	1.00	1.00	1.00	1.00	1.00	1.00	1.00	1.00	1.00	1.00	1.00
AdjDel/Veh:	12.9	12.9	12.9	11.2	10.1	10.1	9.8	18.4	18.2	12.7	12.8	12.7
LOS by Move:	B	B	B	B	B	B	A	C	C	B	B	B
ApproachDel:		12.9			10.7			18.3			12.8	
Delay Adj:		1.00			1.00			1.00			1.00	
ApprAdjDel:		12.9			10.7			18.3			12.8	
LOS by Appr:		B			B			C			B	
AllWayAvgQ:	0.5	0.5	0.5	0.0	0.0	0.0	0.0	1.4	1.4	0.4	0.5	0.5

Note: Queue reported is the number of cars per lane.

Movement	EBL	EBT	EBR	WBL	WBT	WBR	NBL	NBT	NBR	SBL	SBT	SBR
Lane Configurations												
Ideal Flow (vphpl)	1900	1900	1900	1900	1900	1900	1900	1900	1900	1900	1900	1900
Total Lost time (s)		4.0			4.0			4.0	4.0		4.0	4.0
Lane Util. Factor		*1.00			*1.00			1.00	1.00		1.00	1.00
Frt		1.00			1.00			1.00	1.00		1.00	1.00
Flt Protected		1.00			1.00			1.00	1.00		1.00	1.00
Satd. Flow (prot)		3800			3800			1900	1900		1900	1900
Flt Permitted		1.00			1.00			1.00	1.00		1.00	1.00
Satd. Flow (perm)		3800			3800			1900	1900		1900	1900
Volume (vph)	88	483	80	153	240	2	56	88	168	5	126	47
Peak-hour factor, PHF	0.95	0.95	0.95	0.95	0.95	0.95	0.95	0.95	0.95	0.95	0.95	0.95
Adj. Flow (vph)	93	508	84	161	253	2	59	93	177	5	133	49
RTOR Reduction (vph)	0	16	0	0	1	0	0	0	132	0	0	37
Lane Group Flow (vph)	0	669	0	0	415	0	0	152	45	0	138	12
Turn Type	Perm			Perm			Split		Perm	Split		Perm
Protected Phases		4			8		2	2		6	6	
Permitted Phases	4			8					2			6
Actuated Green, G (s)		26.0			26.0			19.0	19.0		18.0	18.0
Effective Green, g (s)		26.0			26.0			19.0	19.0		18.0	18.0
Actuated g/C Ratio		0.35			0.35			0.25	0.25		0.24	0.24
Clearance Time (s)		4.0			4.0			4.0	4.0		4.0	4.0
Lane Grp Cap (vph)		1317			1317			481	481		456	456
v/s Ratio Prot								c0.08			c0.07	
v/s Ratio Perm		0.18			0.11				0.02			0.01
v/c Ratio		0.51			0.32			0.32	0.09		0.30	0.03
Uniform Delay, d1		19.4			18.0			22.7	21.4		23.4	21.8
Progression Factor		1.00			0.94			1.00	1.00		1.00	1.00
Incremental Delay, d2		1.4			0.6			1.7	0.4		1.7	0.1
Delay (s)		20.8			17.5			24.4	21.8		25.1	21.9
Level of Service		C			B			C	C		C	C
Approach Delay (s)		20.8			17.5			23.0			24.2	
Approach LOS		C			B			C			C	

Intersection Summary			
HCM Average Control Delay	20.8	HCM Level of Service	C
HCM Volume to Capacity ratio	0.39		
Actuated Cycle Length (s)	75.0	Sum of lost time (s)	12.0
Intersection Capacity Utilization	57.6%	ICU Level of Service	B
Analysis Period (min)	15		

c Critical Lane Group

Movement	EBT	EBR	WBL	WBT	NBL	NBR
Lane Configurations						
Sign Control	Free			Free	Stop	
Grade	0%			0%	0%	
Volume (veh/h)	0	31	0	0	23	0
Peak Hour Factor	0.95	0.95	0.95	0.95	0.95	0.95
Hourly flow rate (vph)	0	33	0	0	24	0
Pedestrians						
Lane Width (ft)						
Walking Speed (ft/s)						
Percent Blockage						
Right turn flare (veh)						
Median type					None	
Median storage veh)						
Upstream signal (ft)				854		
pX, platoon unblocked						
vC, conflicting volume			33		16	16
vC1, stage 1 conf vol						
vC2, stage 2 conf vol						
vCu, unblocked vol			33		16	16
tC, single (s)			4.1		6.8	6.9
tC, 2 stage (s)						
tF (s)			2.2		3.5	3.3
p0 queue free %			100		98	100
cM capacity (veh/h)			1592		1005	1065

Direction, Lane #	EB 1	EB 2	WB 1	WB 2	NB 1
Volume Total	0	33	0	0	24
Volume Left	0	0	0	0	24
Volume Right	0	33	0	0	0
cSH	1700	1700	1700	1700	1005
Volume to Capacity	0.00	0.02	0.00	0.00	0.02
Queue Length 95th (ft)	0	0	0	0	2
Control Delay (s)	0.0	0.0	0.0	0.0	8.7
Lane LOS					A
Approach Delay (s)	0.0		0.0		8.7
Approach LOS					A

Intersection Summary			
Average Delay	3.7		
Intersection Capacity Utilization	13.3%	ICU Level of Service	A
Analysis Period (min)	15		

Year 2035 Build AM Peak Hour
City of San Bernardino
Downtown San Bernardino Passenger Rail Project (With 3rd St Closure)

Level Of Service Computation Report
2000 HCM Unsignalized Method (Base Volume Alternative)

Intersection #5 J St and 2nd St

Average Delay (sec/veh): 13.2 Worst Case Level Of Service: F[252.0]

Street Name:	J St						2nd St					
Approach:	North Bound			South Bound			East Bound			West Bound		
Movement:	L	T	R	L	T	R	L	T	R	L	T	R
Control:	Stop Sign			Stop Sign			Uncontrolled			Uncontrolled		
Rights:	Include			Include			Include			Include		
Lanes:	0 0 1!	0	0	0 1	0	0 0	1 0	1	1 0	1 0	1	1 0
Volume Module:												
Base Vol:	20	1	195	40	3	0	9	807	43	216	475	40
Growth Adj:	1.00	1.00	1.00	1.00	1.00	1.00	1.00	1.00	1.00	1.00	1.00	1.00
Initial Bse:	20	1	195	40	3	0	9	807	43	216	475	40
User Adj:	1.00	1.00	1.00	1.00	1.00	1.00	1.00	1.00	1.00	1.00	1.00	1.00
PHF Adj:	0.95	0.95	0.95	0.95	0.95	0.95	0.95	0.95	0.95	0.95	0.95	0.95
PHF Volume:	21	1	205	42	3	0	9	849	45	227	500	42
Reduct Vol:	0	0	0	0	0	0	0	0	0	0	0	0
FinalVolume:	21	1	205	42	3	0	9	849	45	227	500	42
Critical Gap Module:												
Critical Gp:	7.5	6.5	6.9	7.5	6.5	xxxxx	4.1	xxxx	xxxxx	4.1	xxxx	xxxxx
FollowUpTim:	3.5	4.0	3.3	3.5	4.0	xxxxx	2.2	xxxx	xxxxx	2.2	xxxx	xxxxx
Capacity Module:												
Cnflict Vol:	1597	1888	447	1420	1889	xxxxx	542	xxxx	xxxxx	895	xxxx	xxxxx
Potent Cap.:	73	71	564	98	71	xxxxx	1037	xxxx	xxxxx	767	xxxx	xxxxx
Move Cap.:	53	50	564	47	50	xxxxx	1037	xxxx	xxxxx	767	xxxx	xxxxx
Volume/Cap:	0.40	0.02	0.36	0.89	0.06	xxxx	0.01	xxxx	xxxx	0.30	xxxx	xxxx
Level Of Service Module:												
2Way95thQ:	xxxx	xxxx	xxxxx	xxxx	xxxx	xxxxx	0.0	xxxx	xxxxx	1.2	xxxx	xxxxx
Control Del:	xxxxx	xxxx	xxxxx	xxxxx	xxxx	xxxxx	8.5	xxxx	xxxxx	11.7	xxxx	xxxxx
LOS by Move:	*	*	*	*	*	*	A	*	*	B	*	*
Movement:	LT -	LTR -	RT	LT -	LTR -	RT	LT -	LTR -	RT	LT -	LTR -	RT
Shared Cap.:	xxxx	291	xxxxx	47	xxxx	xxxxx	xxxx	xxxx	xxxxx	xxxx	xxxx	xxxxx
SharedQueue:	xxxxx	6.1	xxxxx	4.0	xxxx	xxxxx	xxxxx	xxxx	xxxxx	xxxxx	xxxx	xxxxx
Shrd ConDel:	xxxxx	50.5	xxxxx	252.0	xxxx	xxxxx	xxxxx	xxxx	xxxxx	xxxxx	xxxx	xxxxx
Shared LOS:	*	F	*	F	*	*	*	*	*	*	*	*
ApproachDel:	50.5			252.0			xxxxxx			xxxxxx		
ApproachLOS:	F			F			*			*		

Note: Queue reported is the number of cars per lane.

Year 2035 Build AM Peak Hour
City of San Bernardino
Downtown San Bernardino Passenger Rail Project (With 3rd St Closure)

Level Of Service Computation Report
2000 HCM Unsignalized Method (Base Volume Alternative)

Intersection #6 J St and Rialto Ave

Average Delay (sec/veh): 238.7 Worst Case Level Of Service: F[1362.7]

Street Name:	J St						Rialto Ave					
Approach:	North Bound			South Bound			East Bound			West Bound		
Movement:	L	T	R	L	T	R	L	T	R	L	T	R
Control:	Stop Sign			Stop Sign			Uncontrolled			Uncontrolled		
Rights:	Include			Include			Include			Include		
Lanes:	0 0 1! 0 0			0 0 1! 0 0			0 1 0 1 0			0 1 0 1 0		
Volume Module:												
Base Vol:	30	43	38	139	67	12	95	593	17	87	389	60
Growth Adj:	1.00	1.00	1.00	1.00	1.00	1.00	1.00	1.00	1.00	1.00	1.00	1.00
Initial Bse:	30	43	38	139	67	12	95	593	17	87	389	60
User Adj:	1.00	1.00	1.00	1.00	1.00	1.00	1.00	1.00	1.00	1.00	1.00	1.00
PHF Adj:	0.88	0.88	0.88	0.88	0.88	0.88	0.88	0.88	0.88	0.88	0.88	0.88
PHF Volume:	34	49	43	158	76	14	108	674	19	99	442	68
Reduct Vol:	0	0	0	0	0	0	0	0	0	0	0	0
FinalVolume:	34	49	43	158	76	14	108	674	19	99	442	68
Critical Gap Module:												
Critical Gp:	7.5	6.5	6.9	7.5	6.5	6.9	4.1	xxxx	xxxxx	4.1	xxxx	xxxxx
FollowUpTim:	3.5	4.0	3.3	3.5	4.0	3.3	2.2	xxxx	xxxxx	2.2	xxxx	xxxxx
Capacity Module:												
Cnflict Vol:	1356	1607	347	1251	1583	255	510	xxxx	xxxxx	693	xxxx	xxxxx
Potent Cap.:	110	106	655	131	110	750	1065	xxxx	xxxxx	912	xxxx	xxxxx
Move Cap.:	23	83	655	56	86	750	1065	xxxx	xxxxx	912	xxxx	xxxxx
Volume/Cap:	1.51	0.59	0.07	2.84	0.88	0.02	0.10	xxxx	xxxx	0.11	xxxx	xxxx
Level Of Service Module:												
2Way95thQ:	xxxx	xxxx	xxxxx	xxxx	xxxx	xxxxx	0.3	xxxx	xxxxx	0.4	xxxx	xxxxx
Control Del:	xxxxx	xxxx	xxxxx	xxxxx	xxxx	xxxxx	8.8	xxxx	xxxxx	9.4	xxxx	xxxxx
LOS by Move:	*	*	*	*	*	*	A	*	*	A	*	*
Movement:	LT	LTR	RT	LT	LTR	RT	LT	LTR	RT	LT	LTR	RT
Shared Cap.:	xxxx	58	xxxxx	xxxx	66	xxxxx	xxxx	xxxx	xxxxx	xxxx	xxxx	xxxxx
SharedQueue:	xxxxx	12.3	xxxxx	xxxxx	26.2	xxxxx	0.3	xxxx	xxxxx	0.4	xxxx	xxxxx
Shrd ConDel:	xxxxx	685	xxxxx	xxxxx	1363	xxxxx	8.8	xxxx	xxxxx	9.4	xxxx	xxxxx
Shared LOS:	*	F	*	*	F	*	A	*	*	A	*	*
ApproachDel:	685.1			1362.7			xxxxxx			xxxxxx		
ApproachLOS:	F			F			*			*		

Note: Queue reported is the number of cars per lane.

Movement	EBL	EBT	EBR	WBL	WBT	WBR	NBL	NBT	NBR	SBL	SBT	SBR
Lane Configurations												
Ideal Flow (vphpl)	1800	1900	1900	1800	1900	1900	1900	1900	1900	1900	1900	1900
Total Lost time (s)	4.0	4.0		4.0	4.0			4.0	4.0		4.0	4.0
Lane Util. Factor	1.00	*1.00		1.00	*1.00			*1.00	1.00		*1.00	1.00
Frt	1.00	1.00		1.00	1.00			1.00	1.00		1.00	1.00
Flt Protected	1.00	1.00		1.00	1.00			1.00	1.00		1.00	1.00
Satd. Flow (prot)	1800	3800		1800	3800			3800	1900		1900	1900
Flt Permitted	1.00	1.00		1.00	1.00			1.00	1.00		1.00	1.00
Satd. Flow (perm)	1800	3800		1800	3800			3800	1900		1900	1900
Volume (vph)	67	990	34	26	654	7	38	1	4	19	16	31
Peak-hour factor, PHF	0.95	0.95	0.95	0.95	0.95	0.95	0.95	0.95	0.95	0.95	0.95	0.95
Adj. Flow (vph)	71	1042	36	27	688	7	40	1	4	20	17	33
RTOR Reduction (vph)	0	3	0	0	1	0	0	0	3	0	0	24
Lane Group Flow (vph)	71	1075	0	27	694	0	0	41	1	0	37	9
Turn Type	Perm			Perm			Perm		Perm	Perm		Perm
Protected Phases		4			8			2			6	
Permitted Phases	4			8			2		2	6		6
Actuated Green, G (s)	46.0	46.0		46.0	46.0			21.0	21.0		21.0	21.0
Effective Green, g (s)	46.0	46.0		46.0	46.0			21.0	21.0		21.0	21.0
Actuated g/C Ratio	0.61	0.61		0.61	0.61			0.28	0.28		0.28	0.28
Clearance Time (s)	4.0	4.0		4.0	4.0			4.0	4.0		4.0	4.0
Lane Grp Cap (vph)	1104	2331		1104	2331			1064	532		532	532
v/s Ratio Prot		c0.28			0.18							
v/s Ratio Perm	0.04			0.01				0.01	0.00		0.02	0.00
v/c Ratio	0.06	0.46		0.02	0.30			0.04	0.00		0.07	0.02
Uniform Delay, d1	5.8	7.8		5.7	6.9			19.7	19.5		19.8	19.5
Progression Factor	1.00	1.00		1.08	0.98			1.12	1.18		1.00	1.00
Incremental Delay, d2	0.1	0.7		0.0	0.3			0.1	0.0		0.3	0.1
Delay (s)	5.9	8.5		6.2	7.1			22.2	23.0		20.1	19.6
Level of Service	A	A		A	A			C	C		C	B
Approach Delay (s)		8.3			7.0			22.2			19.9	
Approach LOS		A			A			C			B	

Intersection Summary			
HCM Average Control Delay	8.6	HCM Level of Service	A
HCM Volume to Capacity ratio	0.34		
Actuated Cycle Length (s)	75.0	Sum of lost time (s)	8.0
Intersection Capacity Utilization	50.6%	ICU Level of Service	A
Analysis Period (min)	15		

c Critical Lane Group

Movement	EBL	EBT	WBT	WBR	SBL	SBR
Lane Configurations						
Sign Control		Free	Free		Stop	
Grade		0%	0%		0%	
Volume (veh/h)	0	733	332	366	0	161
Peak Hour Factor	0.95	0.95	0.95	0.95	0.95	0.95
Hourly flow rate (vph)	0	772	349	385	0	169
Pedestrians						
Lane Width (ft)						
Walking Speed (ft/s)						
Percent Blockage						
Right turn flare (veh)						
Median type					None	
Median storage veh)						
Upstream signal (ft)						
pX, platoon unblocked						
vC, conflicting volume	735				928	367
vC1, stage 1 conf vol						
vC2, stage 2 conf vol						
vCu, unblocked vol	735				928	367
tC, single (s)	4.1				6.8	6.9
tC, 2 stage (s)						
tF (s)	2.2				3.5	3.3
p0 queue free %	100				100	73
cM capacity (veh/h)	880				271	635

Direction, Lane #	EB 1	EB 2	WB 1	WB 2	SB 1
Volume Total	386	386	233	502	169
Volume Left	0	0	0	0	0
Volume Right	0	0	0	385	169
cSH	1700	1700	1700	1700	635
Volume to Capacity	0.23	0.23	0.14	0.30	0.27
Queue Length 95th (ft)	0	0	0	0	27
Control Delay (s)	0.0	0.0	0.0	0.0	12.7
Lane LOS					B
Approach Delay (s)	0.0		0.0		12.7
Approach LOS					B

Intersection Summary			
Average Delay	1.3		
Intersection Capacity Utilization	37.6%	ICU Level of Service	A
Analysis Period (min)	15		

Movement	EBL	EBT	EBR	WBL	WBT	WBR	NBL	NBT	NBR	SBL	SBT	SBR
Lane Configurations												
Ideal Flow (vphpl)	1900	1900	1900	1800	1900	1900	1900	1900	1900	1900	1900	1800
Total Lost time (s)		4.0		4.0	4.0						4.0	4.0
Lane Util. Factor		*1.00		1.00	*1.00						*1.00	*1.00
Frt		1.00		1.00	1.00						1.00	1.00
Flt Protected		1.00		1.00	1.00						1.00	1.00
Satd. Flow (prot)		3800		1800	3800						3800	3600
Flt Permitted		1.00		1.00	1.00						1.00	1.00
Satd. Flow (perm)		3800		1800	3800						3800	3600
Volume (vph)	0	12	0	236	3	0	0	0	0	566	437	1
Peak-hour factor, PHF	0.95	0.95	0.95	0.95	0.95	0.95	0.95	0.95	0.95	0.95	0.95	0.95
Adj. Flow (vph)	0	13	0	248	3	0	0	0	0	596	460	1
RTOR Reduction (vph)	0	0	0	0	0	0	0	0	0	0	0	1
Lane Group Flow (vph)	0	13	0	248	3	0	0	0	0	0	1056	0
Turn Type				Prot						Split		Perm
Protected Phases		4		3	8					6	6	
Permitted Phases												6
Actuated Green, G (s)		12.0		27.0	43.0						39.0	39.0
Effective Green, g (s)		12.0		27.0	43.0						39.0	39.0
Actuated g/C Ratio		0.13		0.30	0.48						0.43	0.43
Clearance Time (s)		4.0		4.0	4.0						4.0	4.0
Lane Grp Cap (vph)		507		540	1816						1647	1560
v/s Ratio Prot		c0.00		c0.14	0.00						c0.28	
v/s Ratio Perm												0.00
v/c Ratio		0.03		0.46	0.00						0.64	0.00
Uniform Delay, d1		33.9		25.6	12.3						20.0	14.5
Progression Factor		1.00		1.81	0.28						1.00	1.00
Incremental Delay, d2		0.1		2.8	0.0						1.9	0.0
Delay (s)		34.0		49.1	3.4						21.9	14.5
Level of Service		C		D	A						C	B
Approach Delay (s)		34.0			48.5			0.0			21.9	
Approach LOS		C			D			A			C	

Intersection Summary			
HCM Average Control Delay	27.1	HCM Level of Service	C
HCM Volume to Capacity ratio	0.48		
Actuated Cycle Length (s)	90.0	Sum of lost time (s)	12.0
Intersection Capacity Utilization	58.2%	ICU Level of Service	B
Analysis Period (min)	15		

c Critical Lane Group

Movement	EBL	EBT	EBR	WBL	WBT	WBR	NBL	NBT	NBR	SBL	SBT	SBR
Lane Configurations												
Ideal Flow (vphpl)	1900	1900	1900	1700	1900	1900	1900	1900	1900	1800	1900	1900
Total Lost time (s)		4.0	4.0	4.0	4.0					4.0	4.0	4.0
Lane Util. Factor		*1.00	1.00	*1.00	*1.00					*1.00	*1.00	*1.00
Frt		1.00	1.00	1.00	1.00					1.00	1.00	1.00
Flt Protected		1.00	1.00	1.00	1.00					1.00	1.00	1.00
Satd. Flow (prot)		5700	1900	3400	3800					1800	1900	1900
Flt Permitted		1.00	1.00	1.00	1.00					1.00	1.00	1.00
Satd. Flow (perm)		5700	1900	3400	3800					1800	1900	1900
Volume (vph)	0	940	46	285	222	0	0	0	0	198	2	465
Peak-hour factor, PHF	0.95	0.95	0.95	0.95	0.95	0.95	0.95	0.95	0.95	0.95	0.95	0.95
Adj. Flow (vph)	0	989	48	300	234	0	0	0	0	208	2	489
RTOR Reduction (vph)	0	0	32	0	0	0	0	0	0	0	163	196
Lane Group Flow (vph)	0	989	16	300	234	0	0	0	0	178	91	71
Turn Type			Perm	Prot						Split		Perm
Protected Phases		4		3	8					6	6	
Permitted Phases			4									6
Actuated Green, G (s)		25.0	25.0	18.0	47.0					20.0	20.0	20.0
Effective Green, g (s)		25.0	25.0	18.0	47.0					20.0	20.0	20.0
Actuated g/C Ratio		0.33	0.33	0.24	0.63					0.27	0.27	0.27
Clearance Time (s)		4.0	4.0	4.0	4.0					4.0	4.0	4.0
Lane Grp Cap (vph)		1900	633	816	2381					480	507	507
v/s Ratio Prot		c0.17		c0.09	0.06					c0.10	0.05	
v/s Ratio Perm			0.01									0.04
v/c Ratio		0.52	0.03	0.37	0.10					0.37	0.18	0.14
Uniform Delay, d1		20.2	16.8	23.8	5.6					22.4	21.2	21.0
Progression Factor		0.64	0.66	1.00	1.00					1.00	1.00	1.00
Incremental Delay, d2		0.9	0.1	1.3	0.1					2.2	0.8	0.6
Delay (s)		13.8	11.2	25.0	5.7					24.6	22.0	21.5
Level of Service		B	B	C	A					C	C	C
Approach Delay (s)		13.7			16.5			0.0			22.5	
Approach LOS		B			B			A			C	

Intersection Summary			
HCM Average Control Delay	17.1	HCM Level of Service	B
HCM Volume to Capacity ratio	0.43		
Actuated Cycle Length (s)	75.0	Sum of lost time (s)	12.0
Intersection Capacity Utilization	75.6%	ICU Level of Service	D
Analysis Period (min)	15		

c Critical Lane Group

Movement	EBL	EBT	EBR	WBL	WBT	WBR	NBL	NBT	NBR	SBL	SBT	SBR
Lane Configurations												
Ideal Flow (vphpl)	1800	1900	1900	1900	1900	1900	1900	1900	1900	1900	1900	1900
Total Lost time (s)	4.0	4.0			4.0	4.0		4.0				
Lane Util. Factor	1.00	*1.00			*1.00	1.00		*1.00				
Frt	1.00	1.00			1.00	1.00		1.00				
Flt Protected	1.00	1.00			1.00	1.00		1.00				
Satd. Flow (prot)	1800	3800			5700	1900		3800				
Flt Permitted	1.00	1.00			1.00	1.00		1.00				
Satd. Flow (perm)	1800	3800			5700	1900		3800				
Volume (vph)	33	547	0	0	236	154	2	487	29	0	0	0
Peak-hour factor, PHF	0.95	0.95	0.95	0.95	0.95	0.95	0.95	0.95	0.95	0.95	0.95	0.95
Adj. Flow (vph)	35	576	0	0	248	162	2	513	31	0	0	0
RTOR Reduction (vph)	0	0	0	0	0	115	0	5	0	0	0	0
Lane Group Flow (vph)	35	576	0	0	248	47	0	541	0	0	0	0
Turn Type	Prot					Perm	Split					
Protected Phases	7	4			8		2	2				
Permitted Phases						8						
Actuated Green, G (s)	20.0	50.0			26.0	26.0		32.0				
Effective Green, g (s)	20.0	50.0			26.0	26.0		32.0				
Actuated g/C Ratio	0.22	0.56			0.29	0.29		0.36				
Clearance Time (s)	4.0	4.0			4.0	4.0		4.0				
Lane Grp Cap (vph)	400	2111			1647	549		1351				
v/s Ratio Prot	0.02	c0.15			0.04			c0.14				
v/s Ratio Perm						0.02						
v/c Ratio	0.09	0.27			0.15	0.09		0.40				
Uniform Delay, d1	27.8	10.5			23.8	23.3		21.8				
Progression Factor	0.59	2.05			1.00	1.00		1.16				
Incremental Delay, d2	0.3	0.2			0.2	0.3		0.8				
Delay (s)	16.6	21.7			24.0	23.6		26.0				
Level of Service	B	C			C	C		C				
Approach Delay (s)		21.4			23.8			26.0			0.0	
Approach LOS		C			C			C			A	

Intersection Summary			
HCM Average Control Delay	23.7	HCM Level of Service	C
HCM Volume to Capacity ratio	0.32		
Actuated Cycle Length (s)	90.0	Sum of lost time (s)	8.0
Intersection Capacity Utilization	58.2%	ICU Level of Service	B
Analysis Period (min)	15		

c Critical Lane Group

Movement	EBL	EBT	EBR	WBL	WBT	WBR	NBL	NBT	NBR	SBL	SBT	SBR
Lane Configurations												
Ideal Flow (vphpl)	1700	1900	1900	1900	1900	1900	1800	1900	1900	1900	1900	1900
Total Lost time (s)	4.0	4.0			4.0	4.0	4.0	4.0	4.0			
Lane Util. Factor	*1.00	*1.00			*1.00	1.00	*1.00	*1.00	*1.00			
Frt	1.00	1.00			1.00	1.00	1.00	1.00	1.00			
Flt Protected	1.00	1.00			1.00	1.00	1.00	1.00	1.00			
Satd. Flow (prot)	3400	3800			7600	1900	1800	1900	1900			
Flt Permitted	1.00	1.00			1.00	1.00	1.00	1.00	1.00			
Satd. Flow (perm)	3400	3800			7600	1900	1800	1900	1900			
Volume (vph)	324	815	0	0	438	159	81	33	1125	0	0	0
Peak-hour factor, PHF	0.95	0.95	0.95	0.95	0.95	0.95	0.95	0.95	0.95	0.95	0.95	0.95
Adj. Flow (vph)	341	858	0	0	461	167	85	35	1184	0	0	0
RTOR Reduction (vph)	0	0	0	0	0	0	0	37	37	0	0	0
Lane Group Flow (vph)	341	858	0	0	461	167	85	572	573	0	0	0
Turn Type	Prot					Free	Split		Prot			
Protected Phases	7	4			8		2	2	2			
Permitted Phases						Free						
Actuated Green, G (s)	20.0	38.0			14.0	90.0	44.0	44.0	44.0			
Effective Green, g (s)	20.0	38.0			14.0	90.0	44.0	44.0	44.0			
Actuated g/C Ratio	0.22	0.42			0.16	1.00	0.49	0.49	0.49			
Clearance Time (s)	4.0	4.0			4.0		4.0	4.0	4.0			
Lane Grp Cap (vph)	756	1604			1182	1900	880	929	929			
v/s Ratio Prot	0.10	c0.23			0.06		0.05	0.30	c0.30			
v/s Ratio Perm						0.09						
v/c Ratio	0.45	0.53			0.39	0.09	0.10	0.62	0.62			
Uniform Delay, d1	30.3	19.4			34.2	0.0	12.3	16.8	16.8			
Progression Factor	1.00	1.00			0.77	1.00	1.00	1.00	1.00			
Incremental Delay, d2	1.9	1.3			0.9	0.1	0.2	3.0	3.1			
Delay (s)	32.2	20.7			27.2	0.1	12.6	19.9	19.9			
Level of Service	C	C			C	A	B	B	B			
Approach Delay (s)		24.0			20.0			19.4			0.0	
Approach LOS		C			C			B			A	

Intersection Summary			
HCM Average Control Delay	21.3	HCM Level of Service	C
HCM Volume to Capacity ratio	0.58		
Actuated Cycle Length (s)	90.0	Sum of lost time (s)	8.0
Intersection Capacity Utilization	75.6%	ICU Level of Service	D
Analysis Period (min)	15		

c Critical Lane Group

Movement	EBL	EBT	EBR	WBL	WBT	WBR	NBL	NBT	NBR	SBL	SBT	SBR
Lane Configurations												
Ideal Flow (vphpl)	1800	1900	1900	1800	1900	1900	1800	1900	1900	1800	1900	1900
Total Lost time (s)	4.0	4.0		4.0	4.0			4.0		4.0	4.0	
Lane Util. Factor	1.00	*1.00		1.00	*1.00			*1.00		1.00	*1.00	
Frt	1.00	1.00		1.00	1.00			1.00		1.00	1.00	
Flt Protected	1.00	1.00		1.00	1.00			1.00		1.00	1.00	
Satd. Flow (prot)	1800	3800		1800	3800			3800		1800	3800	
Flt Permitted	1.00	1.00		1.00	1.00			1.00		1.00	1.00	
Satd. Flow (perm)	1800	3800		1800	3800			3800		1800	3800	
Volume (vph)	41	466	177	26	202	2	0	100	226	26	283	202
Peak-hour factor, PHF	0.95	0.95	0.95	0.95	0.95	0.95	0.95	0.95	0.95	0.95	0.95	0.95
Adj. Flow (vph)	43	491	186	27	213	2	0	105	238	27	298	213
RTOR Reduction (vph)	0	58	0	0	1	0	0	168	0	0	151	0
Lane Group Flow (vph)	43	619	0	27	214	0	0	175	0	27	360	0
Turn Type	Prot			Prot			Perm			Perm		
Protected Phases	5	2		1	6			8			4	
Permitted Phases							8			4		
Actuated Green, G (s)	14.0	27.0		14.0	27.0			22.0		22.0	22.0	
Effective Green, g (s)	14.0	27.0		14.0	27.0			22.0		22.0	22.0	
Actuated g/C Ratio	0.19	0.36		0.19	0.36			0.29		0.29	0.29	
Clearance Time (s)	4.0	4.0		4.0	4.0			4.0		4.0	4.0	
Lane Grp Cap (vph)	336	1368		336	1368			1115		528	1115	
v/s Ratio Prot	c0.02	c0.16		0.01	0.06			0.05			c0.09	
v/s Ratio Perm										0.01		
v/c Ratio	0.13	0.45		0.08	0.16			0.16		0.05	0.32	
Uniform Delay, d1	25.4	18.3		25.2	16.3			19.6		19.0	20.7	
Progression Factor	1.00	1.00		1.00	1.00			1.00		1.00	1.00	
Incremental Delay, d2	0.8	1.1		0.5	0.2			0.3		0.2	0.8	
Delay (s)	26.2	19.4		25.7	16.5			19.9		19.2	21.5	
Level of Service	C	B		C	B			B		B	C	
Approach Delay (s)		19.8			17.5			19.9			21.3	
Approach LOS		B			B			B			C	

Intersection Summary			
HCM Average Control Delay	20.0	HCM Level of Service	B
HCM Volume to Capacity ratio	0.34		
Actuated Cycle Length (s)	75.0	Sum of lost time (s)	12.0
Intersection Capacity Utilization	52.8%	ICU Level of Service	A
Analysis Period (min)	15		

c Critical Lane Group

Movement	EBL	EBT	EBR	WBL	WBT	WBR	NBL	NBT	NBR	SBL	SBT	SBR
Lane Configurations												
Ideal Flow (vphpl)	1800	1900	1900	1800	1900	1900	1800	1900	1900	1800	1900	1900
Total Lost time (s)	4.0	4.0		4.0	4.0		4.0	4.0		4.0	4.0	
Lane Util. Factor	1.00	*1.00		1.00	*1.00		1.00	*1.00		1.00	*1.00	
Frt	1.00	1.00		1.00	1.00		1.00	1.00		1.00	1.00	
Flt Protected	1.00	1.00		1.00	1.00		1.00	1.00		1.00	1.00	
Satd. Flow (prot)	1800	5700		1800	5700		1800	3800		1800	3800	
Flt Permitted	1.00	1.00		1.00	1.00		1.00	1.00		1.00	1.00	
Satd. Flow (perm)	1800	5700		1800	5700		1800	3800		1800	3800	
Volume (vph)	143	1546	203	83	432	77	167	219	85	150	283	38
Peak-hour factor, PHF	0.95	0.95	0.95	0.95	0.95	0.95	0.95	0.95	0.95	0.95	0.95	0.95
Adj. Flow (vph)	151	1627	214	87	455	81	176	231	89	158	298	40
RTOR Reduction (vph)	0	21	0	0	33	0	0	50	0	0	13	0
Lane Group Flow (vph)	151	1820	0	87	503	0	176	270	0	158	326	0
Turn Type	Prot			Prot			pm+pt			pm+pt		
Protected Phases	7	4		3	8		5	2		1	6	
Permitted Phases							2			6		
Actuated Green, G (s)	17.0	38.0		11.0	32.0		26.0	16.0		24.0	15.0	
Effective Green, g (s)	17.0	38.0		11.0	32.0		26.0	16.0		24.0	15.0	
Actuated g/C Ratio	0.19	0.42		0.12	0.36		0.29	0.18		0.27	0.17	
Clearance Time (s)	4.0	4.0		4.0	4.0		4.0	4.0		4.0	4.0	
Lane Grp Cap (vph)	340	2407		220	2027		520	676		480	633	
v/s Ratio Prot	c0.08	c0.32		0.05	0.09		c0.04	0.07		0.03	c0.09	
v/s Ratio Perm							0.06			0.05		
v/c Ratio	0.44	0.76		0.40	0.25		0.34	0.40		0.33	0.51	
Uniform Delay, d1	32.3	22.1		36.4	20.5		25.4	32.7		26.6	34.2	
Progression Factor	0.93	0.81		1.00	1.00		1.00	1.00		1.00	1.00	
Incremental Delay, d2	3.4	1.8		5.3	0.3		1.8	1.8		1.8	3.0	
Delay (s)	33.3	19.7		41.7	20.8		27.1	34.5		28.4	37.1	
Level of Service	C	B		D	C		C	C		C	D	
Approach Delay (s)		20.7			23.7			31.9			34.4	
Approach LOS		C			C			C			C	

Intersection Summary			
HCM Average Control Delay	24.6	HCM Level of Service	C
HCM Volume to Capacity ratio	0.61		
Actuated Cycle Length (s)	90.0	Sum of lost time (s)	16.0
Intersection Capacity Utilization	71.4%	ICU Level of Service	C
Analysis Period (min)	15		

c Critical Lane Group

Movement	EBL	EBT	EBR	WBL	WBT	WBR	NBL	NBT	NBR	SBL	SBT	SBR
Lane Configurations												
Ideal Flow (vphpl)	1800	1900	1900	1800	1900	1900	1800	1900	1900	1800	1900	1900
Total Lost time (s)	4.0	4.0		4.0	4.0		4.0	4.0		4.0	4.0	
Lane Util. Factor	1.00	*1.00		1.00	*1.00		1.00	*1.00		1.00	*1.00	
Frt	1.00	1.00		1.00	1.00		1.00	1.00		1.00	1.00	
Flt Protected	1.00	1.00		1.00	1.00		1.00	1.00		1.00	1.00	
Satd. Flow (prot)	1800	3800		1800	3800		1800	3800		1800	3800	
Flt Permitted	1.00	1.00		1.00	1.00		1.00	1.00		1.00	1.00	
Satd. Flow (perm)	1800	3800		1800	3800		1800	3800		1800	3800	
Volume (vph)	33	532	45	55	260	122	19	64	49	249	146	57
Peak-hour factor, PHF	0.95	0.95	0.95	0.95	0.95	0.95	0.95	0.95	0.95	0.95	0.95	0.95
Adj. Flow (vph)	35	560	47	58	274	128	20	67	52	262	154	60
RTOR Reduction (vph)	0	9	0	0	70	0	0	29	0	0	34	0
Lane Group Flow (vph)	35	598	0	58	332	0	20	90	0	262	180	0
Turn Type	Perm			Perm			Perm			Perm		
Protected Phases		4			8			2			6	
Permitted Phases	4			8			2			6		
Actuated Green, G (s)	34.0	34.0		34.0	34.0		33.0	33.0		33.0	33.0	
Effective Green, g (s)	34.0	34.0		34.0	34.0		33.0	33.0		33.0	33.0	
Actuated g/C Ratio	0.45	0.45		0.45	0.45		0.44	0.44		0.44	0.44	
Clearance Time (s)	4.0	4.0		4.0	4.0		4.0	4.0		4.0	4.0	
Lane Grp Cap (vph)	816	1723		816	1723		792	1672		792	1672	
v/s Ratio Prot		c0.16			0.09			0.02			0.05	
v/s Ratio Perm	0.02			0.03			0.01			c0.15		
v/c Ratio	0.04	0.35		0.07	0.19		0.03	0.05		0.33	0.11	
Uniform Delay, d1	11.4	13.3		11.6	12.3		11.9	12.0		13.8	12.3	
Progression Factor	0.50	0.59		0.61	0.45		1.00	1.00		1.00	1.00	
Incremental Delay, d2	0.1	0.5		0.2	0.2		0.1	0.1		1.1	0.1	
Delay (s)	5.8	8.4		7.3	5.7		12.0	12.1		14.9	12.5	
Level of Service	A	A		A	A		B	B		B	B	
Approach Delay (s)		8.2			5.9			12.1			13.8	
Approach LOS		A			A			B			B	

Intersection Summary			
HCM Average Control Delay	9.5	HCM Level of Service	A
HCM Volume to Capacity ratio	0.34		
Actuated Cycle Length (s)	75.0	Sum of lost time (s)	8.0
Intersection Capacity Utilization	50.7%	ICU Level of Service	A
Analysis Period (min)	15		

c Critical Lane Group

Movement	EBL	EBT	EBR	WBL	WBT	WBR	NBL	NBT	NBR	SBL	SBT	SBR
Lane Configurations												
Sign Control		Stop			Stop			Free			Free	
Grade		0%			0%			0%			0%	
Volume (veh/h)	7	0	4	29	0	5	0	126	57	20	255	6
Peak Hour Factor	0.95	0.95	0.95	0.95	0.95	0.95	0.95	0.95	0.95	0.95	0.95	0.95
Hourly flow rate (vph)	7	0	4	31	0	5	0	133	60	21	268	6
Pedestrians												
Lane Width (ft)												
Walking Speed (ft/s)												
Percent Blockage												
Right turn flare (veh)												
Median type		None			None							
Median storage veh)												
Upstream signal (ft)											927	
pX, platoon unblocked												
vC, conflicting volume	385	506	137	343	479	96	275			193		
vC1, stage 1 conf vol												
vC2, stage 2 conf vol												
vCu, unblocked vol	385	506	137	343	479	96	275			193		
tC, single (s)	7.5	6.5	6.9	7.5	6.5	6.9	4.1			4.1		
tC, 2 stage (s)												
tF (s)	3.5	4.0	3.3	3.5	4.0	3.3	2.2			2.2		
p0 queue free %	99	100	100	95	100	99	100			98		
cM capacity (veh/h)	543	465	892	582	481	948	1300			1393		

Direction, Lane #	EB 1	WB 1	NB 1	NB 2	SB 1	SB 2
Volume Total	12	36	66	126	155	141
Volume Left	7	31	0	0	21	0
Volume Right	4	5	0	60	0	6
cSH	633	617	1300	1700	1393	1700
Volume to Capacity	0.02	0.06	0.00	0.07	0.02	0.08
Queue Length 95th (ft)	1	5	0	0	1	0
Control Delay (s)	10.8	11.2	0.0	0.0	1.1	0.0
Lane LOS	B	B			A	
Approach Delay (s)	10.8	11.2	0.0		0.6	
Approach LOS	B	B				

Intersection Summary			
Average Delay	1.3		
Intersection Capacity Utilization	26.5%	ICU Level of Service	A
Analysis Period (min)	15		

Year 2035 Build AM Peak Hour
City of San Bernardino
Downtown San Bernardino Passenger Rail Project (With 3rd St Closure)

Level Of Service Computation Report
2000 HCM Unsignalized Method (Base Volume Alternative)

Intersection #18 Parking Lot Entrance and Congress St

Average Delay (sec/veh): 7.6 Worst Case Level Of Service: A[9.7]

Street Name:	Parking Lot Entrance						Congress Street					
Approach:	North Bound			South Bound			East Bound			West Bound		
Movement:	L	T	R	L	T	R	L	T	R	L	T	R
Control:	Stop Sign			Stop Sign			Uncontrolled			Uncontrolled		
Rights:	Include			Include			Include			Include		
Lanes:	1 0 0 0 0			0 0 0 0 1			0 0 1! 0 0			0 0 0 0 0		
Volume Module:												
Base Vol:	20	0	0	0	0	13	57	0	20	0	0	0
Growth Adj:	1.00	1.00	1.00	1.00	1.00	1.00	1.00	1.00	1.00	1.00	1.00	1.00
Initial Bse:	20	0	0	0	0	13	57	0	20	0	0	0
User Adj:	1.00	1.00	1.00	1.00	1.00	1.00	1.00	1.00	1.00	1.00	1.00	1.00
PHF Adj:	0.95	0.95	0.95	0.95	0.95	0.95	0.95	0.95	0.95	0.95	0.95	0.95
PHF Volume:	21	0	0	0	0	14	60	0	21	0	0	0
Reduct Vol:	0	0	0	0	0	0	0	0	0	0	0	0
FinalVolume:	21	0	0	0	0	14	60	0	21	0	0	0
Critical Gap Module:												
Critical Gp:	7.1	xxxx	xxxxx	xxxxx	xxxx	6.2	4.1	xxxx	xxxxx	xxxxx	xxxx	xxxxx
FollowUpTim:	3.5	xxxx	xxxxx	xxxxx	xxxx	3.3	2.2	xxxx	xxxxx	xxxxx	xxxx	xxxxx
Capacity Module:												
Cnflict Vol:	131	xxxx	xxxxx	xxxx	xxxx	0	0	xxxx	xxxxx	xxxx	xxxx	xxxxx
Potent Cap.:	847	xxxx	xxxxx	xxxx	xxxx	900	900	xxxx	xxxxx	xxxx	xxxx	xxxxx
Move Cap.:	790	xxxx	xxxxx	xxxx	xxxx	900	900	xxxx	xxxxx	xxxx	xxxx	xxxxx
Volume/Cap:	0.03	xxxx	xxxx	xxxx	xxxx	0.02	0.07	xxxx	xxxx	xxxx	xxxx	xxxx
Level Of Service Module:												
2Way95thQ:	0.1	xxxx	xxxxx	xxxx	xxxx	0.0	0.2	xxxx	xxxxx	xxxx	xxxx	xxxxx
Control Del:	9.7	xxxx	xxxxx	xxxxx	xxxx	9.1	9.3	xxxx	xxxxx	xxxxx	xxxx	xxxxx
LOS by Move:	A	*	*	*	*	A	A	*	*	*	*	*
Movement:	LT	LTR	RT	LT	LTR	RT	LT	LTR	RT	LT	LTR	RT
Shared Cap.:	xxxx	xxxx	xxxxx	xxxx	xxxx	xxxxx	xxxx	xxxx	xxxxx	xxxx	xxxx	xxxxx
SharedQueue:	xxxxx	xxxx	xxxxx	xxxxx	xxxx	xxxxx	xxxxx	xxxx	xxxxx	xxxxx	xxxx	xxxxx
Shrd ConDel:	xxxxx	xxxx	xxxxx	xxxxx	xxxx	xxxxx	xxxxx	xxxx	xxxxx	xxxxx	xxxx	xxxxx
Shared LOS:	*	*	*	*	*	*	*	*	*	*	*	*
ApproachDel:	9.7			9.1			xxxxxx			xxxxxx		
ApproachLOS:	A			A			*			*		

Note: Queue reported is the number of cars per lane.

Movement	EBL	EBT	EBR	WBL	WBT	WBR	NBL	NBT	NBR	SBL	SBT	SBR
Lane Configurations												
Ideal Flow (vphpl)	1800	1900	1900	1800	1900	1900	1800	1900	1900	1800	1900	1900
Total Lost time (s)	4.0	4.0		4.0	4.0		4.0	4.0		4.0	4.0	4.0
Lane Util. Factor	1.00	*1.00		1.00	*1.00		1.00	1.00		1.00	*1.00	1.00
Frt	1.00	1.00		1.00	1.00		1.00	1.00		1.00	1.00	1.00
Flt Protected	1.00	1.00		1.00	1.00		1.00	1.00		1.00	1.00	1.00
Satd. Flow (prot)	1800	3800		1800	5700		1800	1900		1800	1900	1900
Flt Permitted	1.00	1.00		1.00	1.00		1.00	1.00		1.00	1.00	1.00
Satd. Flow (perm)	1800	3800		1800	5700		1800	1900		1800	1900	1900
Volume (vph)	269	940	153	78	429	14	83	255	79	18	527	67
Peak-hour factor, PHF	0.95	0.95	0.95	0.95	0.95	0.95	0.95	0.95	0.95	0.95	0.95	0.95
Adj. Flow (vph)	283	989	161	82	452	15	87	268	83	19	555	71
RTOR Reduction (vph)	0	17	0	0	5	0	0	14	0	0	0	47
Lane Group Flow (vph)	283	1133	0	82	462	0	87	337	0	19	555	24
Turn Type	Prot			Prot			pm+pt			pm+pt		Perm
Protected Phases	7	4		3	8		5	2		1	6	
Permitted Phases							2			6		6
Actuated Green, G (s)	14.0	25.0		6.0	17.0		33.0	27.0		33.0	27.0	27.0
Effective Green, g (s)	14.0	25.0		6.0	17.0		33.0	27.0		33.0	27.0	27.0
Actuated g/C Ratio	0.18	0.31		0.08	0.21		0.41	0.34		0.41	0.34	0.34
Clearance Time (s)	4.0	4.0		4.0	4.0		4.0	4.0		4.0	4.0	4.0
Lane Grp Cap (vph)	315	1188		135	1211		833	641		833	641	641
v/s Ratio Prot	c0.16	c0.30		0.05	0.08		c0.01	0.18		0.00	c0.29	
v/s Ratio Perm							0.04			0.01		0.01
v/c Ratio	0.90	0.95		0.61	0.38		0.10	0.53		0.02	0.87	0.04
Uniform Delay, d1	32.3	26.9		35.9	27.0		16.9	21.3		14.4	24.8	17.8
Progression Factor	1.00	1.00		1.00	1.00		1.00	1.00		1.00	1.00	1.00
Incremental Delay, d2	30.4	17.1		18.7	0.9		0.3	3.1		0.1	14.6	0.1
Delay (s)	62.7	44.0		54.5	27.9		17.2	24.4		14.5	39.4	17.9
Level of Service	E	D		D	C		B	C		B	D	B
Approach Delay (s)		47.7			31.9			23.0			36.3	
Approach LOS		D			C			C			D	

Intersection Summary			
HCM Average Control Delay	38.9	HCM Level of Service	D
HCM Volume to Capacity ratio	0.81		
Actuated Cycle Length (s)	80.0	Sum of lost time (s)	12.0
Intersection Capacity Utilization	81.3%	ICU Level of Service	D
Analysis Period (min)	15		

c Critical Lane Group

Movement	EBL	EBT	EBR	WBL	WBT	WBR	NBL	NBT	NBR	SBL	SBT	SBR
Lane Configurations												
Ideal Flow (vphpl)	1800	1900	1900	1800	1900	1900	1800	1900	1900	1800	1900	1900
Total Lost time (s)	4.0	4.0	4.0	4.0	4.0		4.0	4.0		4.0	4.0	
Lane Util. Factor	1.00	*1.00	1.00	1.00	*1.00		1.00	*1.00		1.00	*1.00	
Frt	1.00	1.00	1.00	1.00	1.00		1.00	1.00		1.00	1.00	
Flt Protected	1.00	1.00	1.00	1.00	1.00		1.00	1.00		1.00	1.00	
Satd. Flow (prot)	1800	1900	1900	1800	3800		1800	1900		1800	1900	
Flt Permitted	1.00	1.00	1.00	1.00	1.00		1.00	1.00		1.00	1.00	
Satd. Flow (perm)	1800	1900	1900	1800	3800		1800	1900		1800	1900	
Volume (vph)	84	604	65	67	268	57	44	274	83	129	430	41
Peak-hour factor, PHF	0.95	0.95	0.95	0.95	0.95	0.95	0.95	0.95	0.95	0.95	0.95	0.95
Adj. Flow (vph)	88	636	68	71	282	60	46	288	87	136	453	43
RTOR Reduction (vph)	0	0	40	0	26	0	0	14	0	0	5	0
Lane Group Flow (vph)	88	636	28	71	316	0	46	361	0	136	491	0
Turn Type	Perm		Perm	Perm			pm+pt			pm+pt		
Protected Phases		4			8		5	2		1	6	
Permitted Phases	4		4	8			2			6		
Actuated Green, G (s)	31.0	31.0	31.0	31.0	31.0		32.0	26.0		32.0	26.0	
Effective Green, g (s)	31.0	31.0	31.0	31.0	31.0		32.0	26.0		32.0	26.0	
Actuated g/C Ratio	0.41	0.41	0.41	0.41	0.41		0.43	0.35		0.43	0.35	
Clearance Time (s)	4.0	4.0	4.0	4.0	4.0		4.0	4.0		4.0	4.0	
Lane Grp Cap (vph)	744	785	785	744	1571		864	659		864	659	
v/s Ratio Prot		c0.33			0.08		0.00	0.19		c0.01	c0.26	
v/s Ratio Perm	0.05		0.01	0.04			0.02			0.06		
v/c Ratio	0.12	0.81	0.04	0.10	0.20		0.05	0.55		0.16	0.75	
Uniform Delay, d1	13.6	19.4	13.1	13.4	14.1		14.1	19.8		13.9	21.6	
Progression Factor	0.76	0.91	0.82	0.65	0.63		0.74	0.75		1.00	1.00	
Incremental Delay, d2	0.3	8.7	0.1	0.3	0.3		0.1	3.0		0.4	7.5	
Delay (s)	10.7	26.3	10.9	9.0	9.1		10.6	17.8		14.3	29.1	
Level of Service	B	C	B	A	A		B	B		B	C	
Approach Delay (s)		23.3			9.1			17.0			25.9	
Approach LOS		C			A			B			C	

Intersection Summary			
HCM Average Control Delay	20.2	HCM Level of Service	C
HCM Volume to Capacity ratio	0.73		
Actuated Cycle Length (s)	75.0	Sum of lost time (s)	12.0
Intersection Capacity Utilization	77.5%	ICU Level of Service	D
Analysis Period (min)	15		

c Critical Lane Group

Movement	EBL	EBR	NBL	NBT	SBT	SBR
Lane Configurations						
Sign Control	Stop			Free	Free	
Grade	0%			0%	0%	
Volume (veh/h)	13	10	43	389	462	54
Peak Hour Factor	0.95	0.95	0.95	0.95	0.95	0.95
Hourly flow rate (vph)	14	11	45	409	486	57
Pedestrians						
Lane Width (ft)						
Walking Speed (ft/s)						
Percent Blockage						
Right turn flare (veh)						
Median type	None					
Median storage veh)						
Upstream signal (ft)					856	
pX, platoon unblocked						
vC, conflicting volume	810	272	543			
vC1, stage 1 conf vol						
vC2, stage 2 conf vol						
vCu, unblocked vol	810	272	543			
tC, single (s)	6.8	6.9	4.1			
tC, 2 stage (s)						
tF (s)	3.5	3.3	2.2			
p0 queue free %	96	99	96			
cM capacity (veh/h)	308	732	1036			

Direction, Lane #	EB 1	NB 1	NB 2	SB 1	SB 2
Volume Total	24	182	273	324	219
Volume Left	14	45	0	0	0
Volume Right	11	0	0	0	57
cSH	411	1036	1700	1700	1700
Volume to Capacity	0.06	0.04	0.16	0.19	0.13
Queue Length 95th (ft)	5	3	0	0	0
Control Delay (s)	14.3	2.5	0.0	0.0	0.0
Lane LOS	B	A			
Approach Delay (s)	14.3	1.0		0.0	
Approach LOS	B				

Intersection Summary			
Average Delay	0.8		
Intersection Capacity Utilization	39.8%	ICU Level of Service	A
Analysis Period (min)	15		

Movement	EBL	EBT	EBR	WBL	WBT	WBR	NBL	NBT	NBR	SBL	SBT	SBR
Lane Configurations												
Ideal Flow (vphpl)	1800	1900	1900	1800	1900	1900	1800	1900	1900	1800	1900	1900
Total Lost time (s)	4.0	4.0		4.0	4.0		4.0	4.0		4.0	4.0	
Lane Util. Factor	1.00	*1.00		1.00	*1.00		1.00	*1.00		1.00	*1.00	
Frt	1.00	1.00		1.00	1.00		1.00	1.00		1.00	1.00	
Flt Protected	1.00	1.00		1.00	1.00		1.00	1.00		1.00	1.00	
Satd. Flow (prot)	1800	3800		1800	3800		1800	3800		1800	3800	
Flt Permitted	1.00	1.00		1.00	1.00		1.00	1.00		1.00	1.00	
Satd. Flow (perm)	1800	3800		1800	3800		1800	3800		1800	3800	
Volume (vph)	67	284	19	39	273	41	10	219	25	61	349	61
Peak-hour factor, PHF	0.95	0.95	0.95	0.95	0.95	0.95	0.95	0.95	0.95	0.95	0.95	0.95
Adj. Flow (vph)	71	299	20	41	287	43	11	231	26	64	367	64
RTOR Reduction (vph)	0	7	0	0	17	0	0	12	0	0	20	0
Lane Group Flow (vph)	71	312	0	41	313	0	11	245	0	64	411	0
Turn Type	Perm			Perm			Perm			Perm		
Protected Phases		4			8			2			6	
Permitted Phases	4			8			2			6		
Actuated Green, G (s)	34.0	34.0		34.0	34.0		33.0	33.0		33.0	33.0	
Effective Green, g (s)	34.0	34.0		34.0	34.0		33.0	33.0		33.0	33.0	
Actuated g/C Ratio	0.45	0.45		0.45	0.45		0.44	0.44		0.44	0.44	
Clearance Time (s)	4.0	4.0		4.0	4.0		4.0	4.0		4.0	4.0	
Lane Grp Cap (vph)	816	1723		816	1723		792	1672		792	1672	
v/s Ratio Prot		0.08			c0.08			0.06			c0.11	
v/s Ratio Perm	0.04			0.02			0.01			0.04		
v/c Ratio	0.09	0.18		0.05	0.18		0.01	0.15		0.08	0.25	
Uniform Delay, d1	11.7	12.2		11.5	12.2		11.8	12.6		12.2	13.2	
Progression Factor	0.56	0.58		1.00	1.00		1.00	1.00		1.00	1.00	
Incremental Delay, d2	0.2	0.2		0.1	0.2		0.0	0.2		0.2	0.4	
Delay (s)	6.7	7.2		11.6	12.4		11.9	12.8		12.4	13.5	
Level of Service	A	A		B	B		B	B		B	B	
Approach Delay (s)		7.1			12.3			12.7			13.4	
Approach LOS		A			B			B			B	

Intersection Summary			
HCM Average Control Delay	11.4	HCM Level of Service	B
HCM Volume to Capacity ratio	0.21		
Actuated Cycle Length (s)	75.0	Sum of lost time (s)	8.0
Intersection Capacity Utilization	41.0%	ICU Level of Service	A
Analysis Period (min)	15		

c Critical Lane Group

Movement	EBL	EBT	EBR	WBL	WBT	WBR	NBL	NBT	NBR	SBL	SBT	SBR
Lane Configurations												
Ideal Flow (vphpl)	1800	1900	1900	1800	1900	1900	1800	1900	1900	1800	1900	1900
Total Lost time (s)	4.0	4.0	4.0	4.0	4.0		4.0	4.0		4.0	4.0	4.0
Lane Util. Factor	1.00	*1.00	1.00	1.00	*1.00		1.00	*1.00		1.00	*1.00	1.00
Frt	1.00	1.00	1.00	1.00	1.00		1.00	1.00		1.00	1.00	1.00
Flt Protected	1.00	1.00	1.00	1.00	1.00		1.00	1.00		1.00	1.00	1.00
Satd. Flow (prot)	1800	3800	1900	1800	3800		1800	3800		1800	3800	1900
Flt Permitted	1.00	1.00	1.00	1.00	1.00		1.00	1.00		1.00	1.00	1.00
Satd. Flow (perm)	1800	3800	1900	1800	3800		1800	3800		1800	3800	1900
Volume (vph)	185	1182	413	14	323	15	117	181	12	22	155	114
Peak-hour factor, PHF	0.95	0.95	0.95	0.95	0.95	0.95	0.95	0.95	0.95	0.95	0.95	0.95
Adj. Flow (vph)	195	1244	435	15	340	16	123	191	13	23	163	120
RTOR Reduction (vph)	0	0	201	0	5	0	0	7	0	0	0	94
Lane Group Flow (vph)	195	1244	234	15	351	0	123	197	0	23	163	26
Turn Type	Prot		Perm	Prot			pm+pt			pm+pt		Perm
Protected Phases	7	4		3	8		5	2		1	6	
Permitted Phases			4				2			6		6
Actuated Green, G (s)	15.0	31.0	31.0	6.0	22.0		22.0	16.0		22.0	16.0	16.0
Effective Green, g (s)	15.0	31.0	31.0	6.0	22.0		22.0	16.0		22.0	16.0	16.0
Actuated g/C Ratio	0.20	0.41	0.41	0.08	0.29		0.29	0.21		0.29	0.21	0.21
Clearance Time (s)	4.0	4.0	4.0	4.0	4.0		4.0	4.0		4.0	4.0	4.0
Lane Grp Cap (vph)	360	1571	785	144	1115		624	811		624	811	405
v/s Ratio Prot	c0.11	c0.33		0.01	0.09		c0.02	c0.05		0.00	0.04	
v/s Ratio Perm			0.12				0.05			0.01		0.01
v/c Ratio	0.54	0.79	0.30	0.10	0.31		0.20	0.24		0.04	0.20	0.06
Uniform Delay, d1	26.9	19.2	14.7	32.0	20.6		20.1	24.5		19.0	24.2	23.5
Progression Factor	1.00	1.00	1.00	0.76	1.11		1.00	1.00		1.00	1.00	1.00
Incremental Delay, d2	5.7	4.2	1.0	1.4	0.7		0.7	0.7		0.1	0.6	0.3
Delay (s)	32.7	23.4	15.7	25.8	23.7		20.8	25.2		19.1	24.8	23.8
Level of Service	C	C	B	C	C		C	C		B	C	C
Approach Delay (s)		22.5			23.8			23.5			24.0	
Approach LOS		C			C			C			C	

Intersection Summary			
HCM Average Control Delay	23.0	HCM Level of Service	C
HCM Volume to Capacity ratio	0.58		
Actuated Cycle Length (s)	75.0	Sum of lost time (s)	16.0
Intersection Capacity Utilization	60.5%	ICU Level of Service	B
Analysis Period (min)	15		

c Critical Lane Group

Movement	EBL	EBT	EBR	WBL	WBT	WBR	NBL	NBT	NBR	SBL	SBT	SBR
Lane Configurations												
Ideal Flow (vphpl)	1800	1900	1900	1800	1900	1900	1900	1900	1900	1800	1900	1900
Total Lost time (s)	4.0	4.0	4.0	4.0	4.0			4.0		4.0	4.0	
Lane Util. Factor	1.00	1.00	1.00	1.00	1.00			1.00		1.00	1.00	
Frt	1.00	1.00	1.00	1.00	1.00			1.00		1.00	1.00	
Flt Protected	1.00	1.00	1.00	1.00	1.00			1.00		1.00	1.00	
Satd. Flow (prot)	1800	1900	1900	1800	1900			1900		1800	1900	
Flt Permitted	1.00	1.00	1.00	1.00	1.00			1.00		1.00	1.00	
Satd. Flow (perm)	1800	1900	1900	1800	1900			1900		1800	1900	
Volume (vph)	44	434	54	29	281	41	47	0	71	27	0	34
Peak-hour factor, PHF	0.95	0.95	0.95	0.95	0.95	0.95	0.95	0.95	0.95	0.95	0.95	0.95
Adj. Flow (vph)	46	457	57	31	296	43	49	0	75	28	0	36
RTOR Reduction (vph)	0	0	27	0	7	0	0	48	0	0	23	0
Lane Group Flow (vph)	46	457	30	31	332	0	0	76	0	28	13	0
Turn Type	Perm		Perm	Perm			Perm			Perm		
Protected Phases		4			8			2			6	
Permitted Phases	4		4	8			2			6		
Actuated Green, G (s)	40.0	40.0	40.0	40.0	40.0			27.0		27.0	27.0	
Effective Green, g (s)	40.0	40.0	40.0	40.0	40.0			27.0		27.0	27.0	
Actuated g/C Ratio	0.53	0.53	0.53	0.53	0.53			0.36		0.36	0.36	
Clearance Time (s)	4.0	4.0	4.0	4.0	4.0			4.0		4.0	4.0	
Lane Grp Cap (vph)	960	1013	1013	960	1013			684		648	684	
v/s Ratio Prot		c0.24			0.17						0.01	
v/s Ratio Perm	0.03		0.02	0.02				0.04		0.02		
v/c Ratio	0.05	0.45	0.03	0.03	0.33			0.11		0.04	0.02	
Uniform Delay, d1	8.4	10.8	8.3	8.3	9.9			16.0		15.6	15.5	
Progression Factor	0.65	0.60	0.62	1.47	1.57			1.00		1.00	1.00	
Incremental Delay, d2	0.1	1.4	0.1	0.1	0.8			0.3		0.1	0.1	
Delay (s)	5.5	7.9	5.2	12.3	16.4			16.3		15.7	15.5	
Level of Service	A	A	A	B	B			B		B	B	
Approach Delay (s)		7.4			16.1			16.3			15.6	
Approach LOS		A			B			B			B	

Intersection Summary			
HCM Average Control Delay	11.7	HCM Level of Service	B
HCM Volume to Capacity ratio	0.31		
Actuated Cycle Length (s)	75.0	Sum of lost time (s)	8.0
Intersection Capacity Utilization	49.8%	ICU Level of Service	A
Analysis Period (min)	15		

c Critical Lane Group

Movement	EBL	EBT	EBR	WBL	WBT	WBR	NBL	NBT	NBR	SBL	SBT	SBR
Lane Configurations												
Ideal Flow (vphpl)	1800	1900	1900	1800	1900	1900	1800	1900	1900	1800	1900	1900
Total Lost time (s)	4.0	4.0		4.0	4.0		4.0	4.0		4.0	4.0	
Lane Util. Factor	1.00	*1.00		1.00	*1.00		1.00	1.00		1.00	1.00	
Frt	1.00	1.00		1.00	1.00		1.00	1.00		1.00	1.00	
Flt Protected	1.00	1.00		1.00	1.00		1.00	1.00		1.00	1.00	
Satd. Flow (prot)	1800	3800		1800	3800		1800	1900		1800	1900	
Flt Permitted	1.00	1.00		1.00	1.00		1.00	1.00		1.00	1.00	
Satd. Flow (perm)	1800	3800		1800	3800		1800	1900		1800	1900	
Volume (vph)	55	919	116	77	293	28	55	251	86	77	399	34
Peak-hour factor, PHF	0.95	0.95	0.95	0.95	0.95	0.95	0.95	0.95	0.95	0.95	0.95	0.95
Adj. Flow (vph)	58	967	122	81	308	29	58	264	91	81	420	36
RTOR Reduction (vph)	0	14	0	0	10	0	0	17	0	0	4	0
Lane Group Flow (vph)	58	1075	0	81	327	0	58	338	0	81	452	0
Turn Type	Perm			Perm			Perm			Perm		
Protected Phases		4			8			2			6	
Permitted Phases	4			8			2			6		
Actuated Green, G (s)	35.0	35.0		35.0	35.0		32.0	32.0		32.0	32.0	
Effective Green, g (s)	35.0	35.0		35.0	35.0		32.0	32.0		32.0	32.0	
Actuated g/C Ratio	0.47	0.47		0.47	0.47		0.43	0.43		0.43	0.43	
Clearance Time (s)	4.0	4.0		4.0	4.0		4.0	4.0		4.0	4.0	
Lane Grp Cap (vph)	840	1773		840	1773		768	811		768	811	
v/s Ratio Prot		c0.28			0.09			0.18			c0.24	
v/s Ratio Perm	0.03			0.04			0.03			0.04		
v/c Ratio	0.07	0.61		0.10	0.18		0.08	0.42		0.11	0.56	
Uniform Delay, d1	11.0	14.9		11.2	11.7		12.7	15.0		12.9	16.2	
Progression Factor	1.90	2.09		1.00	1.00		0.60	0.50		1.00	1.00	
Incremental Delay, d2	0.1	1.0		0.2	0.2		0.2	1.4		0.3	2.8	
Delay (s)	21.0	32.0		11.4	11.9		7.9	9.0		13.2	18.9	
Level of Service	C	C		B	B		A	A		B	B	
Approach Delay (s)		31.5			11.8			8.8			18.1	
Approach LOS		C			B			A			B	

Intersection Summary			
HCM Average Control Delay	21.6	HCM Level of Service	C
HCM Volume to Capacity ratio	0.58		
Actuated Cycle Length (s)	75.0	Sum of lost time (s)	8.0
Intersection Capacity Utilization	73.3%	ICU Level of Service	D
Analysis Period (min)	15		

c Critical Lane Group

Movement	EBL	EBT	EBR	WBL	WBT	WBR	NBL	NBT	NBR	SBL	SBT	SBR
Lane Configurations												
Ideal Flow (vphpl)	1800	1900	1900	1800	1900	1900	1800	1900	1900	1800	1900	1900
Total Lost time (s)	4.0	4.0		4.0	4.0		4.0	4.0		4.0	4.0	
Lane Util. Factor	1.00	*1.00		1.00	*1.00		1.00	1.00		1.00	1.00	
Frt	1.00	1.00		1.00	1.00		1.00	1.00		1.00	1.00	
Flt Protected	1.00	1.00		1.00	1.00		1.00	1.00		1.00	1.00	
Satd. Flow (prot)	1800	3800		1800	3800		1800	1900		1800	1900	
Flt Permitted	1.00	1.00		1.00	1.00		1.00	1.00		1.00	1.00	
Satd. Flow (perm)	1800	3800		1800	3800		1800	1900		1800	1900	
Volume (vph)	10	92	23	8	27	19	16	386	100	31	504	34
Peak-hour factor, PHF	0.95	0.95	0.95	0.95	0.95	0.95	0.95	0.95	0.95	0.95	0.95	0.95
Adj. Flow (vph)	11	97	24	8	28	20	17	406	105	33	531	36
RTOR Reduction (vph)	0	19	0	0	16	0	0	12	0	0	4	0
Lane Group Flow (vph)	11	102	0	8	32	0	17	499	0	33	563	0
Turn Type	pm+pt			pm+pt			pm+pt			Perm		
Protected Phases	7	4		3	8		5	2			6	
Permitted Phases	4			8			2			6		
Actuated Green, G (s)	22.0	16.0		22.0	16.0		41.0	41.0		31.0	31.0	
Effective Green, g (s)	22.0	16.0		22.0	16.0		41.0	41.0		31.0	31.0	
Actuated g/C Ratio	0.29	0.21		0.29	0.21		0.55	0.55		0.41	0.41	
Clearance Time (s)	4.0	4.0		4.0	4.0		4.0	4.0		4.0	4.0	
Lane Grp Cap (vph)	624	811		624	811		984	1039		744	785	
v/s Ratio Prot	c0.00	c0.03		0.00	0.01		0.00	c0.26			c0.30	
v/s Ratio Perm	0.00			0.00			0.01			0.02		
v/c Ratio	0.02	0.13		0.01	0.04		0.02	0.48		0.04	0.72	
Uniform Delay, d1	18.8	23.8		18.8	23.4		10.5	10.4		13.1	18.4	
Progression Factor	1.00	1.00		1.00	1.00		1.00	1.00		0.92	0.76	
Incremental Delay, d2	0.1	0.3		0.0	0.1		0.0	1.6		0.1	4.9	
Delay (s)	18.9	24.2		18.8	23.5		10.6	12.0		12.2	18.9	
Level of Service	B	C		B	C		B	B		B	B	
Approach Delay (s)		23.7			22.8			12.0			18.5	
Approach LOS		C			C			B			B	

Intersection Summary			
HCM Average Control Delay	16.6	HCM Level of Service	B
HCM Volume to Capacity ratio	0.47		
Actuated Cycle Length (s)	75.0	Sum of lost time (s)	16.0
Intersection Capacity Utilization	42.5%	ICU Level of Service	A
Analysis Period (min)	15		

c Critical Lane Group

Movement	EBL	EBT	EBR	EBR2	WBL2	WBL	WBT	WBR	NBL2	NBL	NBT	NBR
Lane Configurations												
Ideal Flow (vphpl)	1800	1900	1900	1900	1700	1700	1900	1900	1800	1800	1900	1900
Total Lost time (s)	4.0	4.0	4.0			4.0	4.0			4.0	4.0	4.0
Lane Util. Factor	1.00	*1.00	*1.00			*1.00	*1.00			*1.00	*1.00	1.00
Frt	1.00	1.00	1.00			1.00	1.00			1.00	1.00	1.00
Flt Protected	1.00	1.00	1.00			1.00	1.00			1.00	1.00	1.00
Satd. Flow (prot)	1800	3800	1900			3400	3800			1800	3800	1900
Flt Permitted	1.00	1.00	1.00			1.00	1.00			1.00	1.00	1.00
Satd. Flow (perm)	1800	3800	1900			3400	3800			1800	3800	1900
Volume (vph)	121	615	113	4	64	149	335	67	29	63	238	69
Peak-hour factor, PHF	0.95	0.95	0.95	0.95	0.95	0.95	0.95	0.95	0.95	0.95	0.95	0.95
Adj. Flow (vph)	127	647	119	4	67	157	353	71	31	66	251	73
RTOR Reduction (vph)	0	0	1	0	0	0	24	0	0	0	0	56
Lane Group Flow (vph)	127	647	122	0	0	224	400	0	0	56	292	17
Turn Type	Prot		Perm		Prot	Prot			Prot	Prot		Perm
Protected Phases	5	2			1	1	6		3	3	8	
Permitted Phases			2									8
Actuated Green, G (s)	9.0	19.0	19.0			7.0	17.0			6.0	23.0	17.0
Effective Green, g (s)	9.0	19.0	19.0			7.0	17.0			6.0	23.0	17.0
Actuated g/C Ratio	0.12	0.25	0.25			0.09	0.23			0.08	0.31	0.23
Clearance Time (s)	4.0	4.0	4.0			4.0	4.0			4.0	4.0	4.0
Lane Grp Cap (vph)	216	963	481			317	861			144	1368	431
v/s Ratio Prot	c0.07	c0.17				0.07	0.11			c0.03	0.02	
v/s Ratio Perm			0.06								0.06	0.01
v/c Ratio	0.59	0.67	0.25			0.71	0.46			0.39	0.21	0.04
Uniform Delay, d1	31.2	25.2	22.3			33.0	25.1			32.8	19.3	22.6
Progression Factor	1.00	1.00	1.00			1.00	1.00			1.00	1.00	1.00
Incremental Delay, d2	11.2	3.7	1.3			12.5	1.8			7.7	0.4	0.2
Delay (s)	42.5	28.9	23.6			45.5	26.9			40.5	19.6	22.8
Level of Service	D	C	C			D	C			D	B	C
Approach Delay (s)		30.1					33.3				23.0	
Approach LOS		C					C				C	

Intersection Summary			
HCM Average Control Delay	32.2	HCM Level of Service	C
HCM Volume to Capacity ratio	0.59		
Actuated Cycle Length (s)	75.0	Sum of lost time (s)	16.0
Intersection Capacity Utilization	71.4%	ICU Level of Service	C
Analysis Period (min)	15		

c Critical Lane Group

Movement	SBL	SBT	SBR	SBR2	NEL2	NEL	NER	NER2
Lane Configurations								
Ideal Flow (vphpl)	1800	1900	1900	1900	1700	1700	1900	1900
Total Lost time (s)	4.0	4.0	4.0			4.0	4.0	
Lane Util. Factor	1.00	*1.00	*1.00			*1.00	*1.00	
Frt	1.00	1.00	1.00			1.00	1.00	
Flt Protected	1.00	1.00	1.00			1.00	1.00	
Satd. Flow (prot)	1800	1900	1900			3400	3800	
Flt Permitted	1.00	1.00	1.00			1.00	1.00	
Satd. Flow (perm)	1800	1900	1900			3400	3800	
Volume (vph)	48	259	52	64	4	111	187	39
Peak-hour factor, PHF	0.95	0.95	0.95	0.95	0.95	0.95	0.95	0.95
Adj. Flow (vph)	51	273	55	67	4	117	197	41
RTOR Reduction (vph)	0	0	52	0	0	0	25	0
Lane Group Flow (vph)	51	273	70	0	0	121	213	0
Turn Type	Prot		Perm		Split		Perm	
Protected Phases	7	4			9	9		
Permitted Phases			4				9	
Actuated Green, G (s)	6.0	17.0	17.0			6.0	6.0	
Effective Green, g (s)	6.0	17.0	17.0			6.0	6.0	
Actuated g/C Ratio	0.08	0.23	0.23			0.08	0.08	
Clearance Time (s)	4.0	4.0	4.0			4.0	4.0	
Lane Grp Cap (vph)	144	431	431			272	304	
v/s Ratio Prot	0.03	c0.14				0.04		
v/s Ratio Perm			0.04				c0.06	
v/c Ratio	0.35	0.63	0.16			0.44	0.70	
Uniform Delay, d1	32.7	26.2	23.3			32.9	33.6	
Progression Factor	1.30	1.05	1.34			1.00	1.00	
Incremental Delay, d2	5.5	5.7	0.7			5.2	12.7	
Delay (s)	48.0	33.1	31.8			38.1	46.3	
Level of Service	D	C	C			D	D	
Approach Delay (s)		34.5				43.6		
Approach LOS		C				D		

Intersection Summary

FORECAST YEAR (2035) WITH PROJECT CONDITIONS

PM PEAK HOUR

Movement	EBL	EBR	NBL	NBT	SBT	SBR
Lane Configurations						
Sign Control	Stop			Free	Free	
Grade	0%			0%	0%	
Volume (veh/h)	15	107	8	6	11	27
Peak Hour Factor	0.95	0.95	0.95	0.95	0.95	0.95
Hourly flow rate (vph)	16	113	8	6	12	28
Pedestrians						
Lane Width (ft)						
Walking Speed (ft/s)						
Percent Blockage						
Right turn flare (veh)						
Median type	None					
Median storage veh)						
Upstream signal (ft)						
pX, platoon unblocked						
vC, conflicting volume	49	26	40			
vC1, stage 1 conf vol						
vC2, stage 2 conf vol						
vCu, unblocked vol	49	26	40			
tC, single (s)	6.4	6.2	4.1			
tC, 2 stage (s)						
tF (s)	3.5	3.3	2.2			
p0 queue free %	98	89	99			
cM capacity (veh/h)	960	1056	1583			

Direction, Lane #	EB 1	NB 1	NB 2	SB 1
Volume Total	128	8	6	40
Volume Left	16	8	0	0
Volume Right	113	0	0	28
cSH	1043	1583	1700	1700
Volume to Capacity	0.12	0.01	0.00	0.02
Queue Length 95th (ft)	10	0	0	0
Control Delay (s)	8.9	7.3	0.0	0.0
Lane LOS	A	A		
Approach Delay (s)	8.9	4.2		0.0
Approach LOS	A			

Intersection Summary			
Average Delay	6.6		
Intersection Capacity Utilization	21.1%	ICU Level of Service	A
Analysis Period (min)	15		

Year 2035 Build PM Peak Hour
City of San Bernardino
Downtown San Bernardino Passenger Rail Project (With 3rd St Closure)

Level Of Service Computation Report
2000 HCM 4-Way Stop Method (Base Volume Alternative)

Intersection #2 K St and 2nd St

Cycle (sec):	100	Critical Vol./Cap.(X):	0.929
Loss Time (sec):	0 (Y+R=4.0 sec)	Average Delay (sec/veh):	34.9
Optimal Cycle:	0	Level Of Service:	D

Street Name:	K St						2nd St					
Approach:	North Bound			South Bound			East Bound			West Bound		
Movement:	L	T	R	L	T	R	L	T	R	L	T	R
Control:	Stop Sign			Stop Sign			Stop Sign			Stop Sign		
Rights:	Include			Include			Include			Include		
Min. Green:	0	0	0	0	0	0	0	0	0	0	0	0
Lanes:	0 0	1! 0	0	1 0	0 1	0	1 0	1 1	0	1 0	1 1	0
Volume Module:												
Base Vol:	38	4	196	101	7	12	8	759	15	140	473	11
Growth Adj:	1.00	1.00	1.00	1.00	1.00	1.00	1.00	1.00	1.00	1.00	1.00	1.00
Initial Bse:	38	4	196	101	7	12	8	759	15	140	473	11
User Adj:	1.00	1.00	1.00	1.00	1.00	1.00	1.00	1.00	1.00	1.00	1.00	1.00
PHF Adj:	0.92	0.92	0.92	0.92	0.92	0.92	0.92	0.92	0.92	0.92	0.92	0.92
PHF Volume:	41	4	213	110	8	13	9	825	16	152	514	12
Reduct Vol:	0	0	0	0	0	0	0	0	0	0	0	0
Reduced Vol:	41	4	213	110	8	13	9	825	16	152	514	12
PCE Adj:	1.00	1.00	1.00	1.00	1.00	1.00	1.00	1.00	1.00	1.00	1.00	1.00
MLF Adj:	1.00	1.00	1.00	1.00	1.00	1.00	1.00	1.00	1.00	1.00	1.00	1.00
FinalVolume:	41	4	213	110	8	13	9	825	16	152	514	12
Saturation Flow Module:												
Adjustment:	1.00	1.00	1.00	1.00	1.00	1.00	1.00	1.00	1.00	1.00	1.00	1.00
Lanes:	0.16	0.02	0.82	1.00	0.37	0.63	1.00	1.96	0.04	1.00	1.95	0.05
Final Sat.:	75	8	386	367	149	256	416	888	18	404	842	20
Capacity Analysis Module:												
Vol/Sat:	0.55	0.55	0.55	0.30	0.05	0.05	0.02	0.93	0.93	0.38	0.61	0.61
Crit Moves:		****		****				****			****	
Delay/Veh:	19.2	19.2	19.2	15.7	11.5	11.5	11.3	54.0	53.6	16.5	22.6	22.5
Delay Adj:	1.00	1.00	1.00	1.00	1.00	1.00	1.00	1.00	1.00	1.00	1.00	1.00
AdjDel/Veh:	19.2	19.2	19.2	15.7	11.5	11.5	11.3	54.0	53.6	16.5	22.6	22.5
LOS by Move:	C	C	C	C	B	B	B	F	F	C	C	C
ApproachDel:		19.2			15.0			53.6			21.2	
Delay Adj:		1.00			1.00			1.00			1.00	
ApprAdjDel:		19.2			15.0			53.6			21.2	
LOS by Appr:		C			C			F			C	
AllWayAvgQ:	1.1	1.1	1.1	0.4	0.0	0.0	0.0	5.5	5.4	0.6	1.4	1.4

Note: Queue reported is the number of cars per lane.

Movement	EBL	EBT	EBR	WBL	WBT	WBR	NBL	NBT	NBR	SBL	SBT	SBR
Lane Configurations												
Ideal Flow (vphpl)	1900	1900	1900	1900	1900	1900	1900	1900	1900	1900	1900	1900
Total Lost time (s)		4.0			4.0			4.0	4.0		4.0	4.0
Lane Util. Factor		*1.00			*1.00			1.00	1.00		1.00	1.00
Frt		1.00			1.00			1.00	1.00		1.00	1.00
Flt Protected		1.00			1.00			1.00	1.00		1.00	1.00
Satd. Flow (prot)		3800			3800			1900	1900		1900	1900
Flt Permitted		1.00			1.00			1.00	1.00		1.00	1.00
Satd. Flow (perm)		3800			3800			1900	1900		1900	1900
Volume (vph)	74	327	58	145	671	16	53	154	196	6	127	52
Peak-hour factor, PHF	0.95	0.95	0.95	0.95	0.95	0.95	0.95	0.95	0.95	0.95	0.95	0.95
Adj. Flow (vph)	78	344	61	153	706	17	56	162	206	6	134	55
RTOR Reduction (vph)	0	16	0	0	2	0	0	0	151	0	0	44
Lane Group Flow (vph)	0	467	0	0	874	0	0	218	55	0	140	11
Turn Type	Perm			Perm			Split		Perm	Split		Perm
Protected Phases		4			8		2	2		6	6	
Permitted Phases	4			8					2			6
Actuated Green, G (s)		28.0			28.0			20.0	20.0		15.0	15.0
Effective Green, g (s)		28.0			28.0			20.0	20.0		15.0	15.0
Actuated g/C Ratio		0.37			0.37			0.27	0.27		0.20	0.20
Clearance Time (s)		4.0			4.0			4.0	4.0		4.0	4.0
Lane Grp Cap (vph)		1419			1419			507	507		380	380
v/s Ratio Prot								c0.11			c0.07	
v/s Ratio Perm		0.12			0.23				0.03			0.01
v/c Ratio		0.33			0.62			0.43	0.11		0.37	0.03
Uniform Delay, d1		16.8			19.1			22.8	20.8		25.9	24.1
Progression Factor		1.00			0.86			1.00	1.00		1.00	1.00
Incremental Delay, d2		0.6			2.0			2.7	0.4		2.7	0.1
Delay (s)		17.4			18.4			25.4	21.2		28.6	24.3
Level of Service		B			B			C	C		C	C
Approach Delay (s)		17.4			18.4			23.4			27.4	
Approach LOS		B			B			C			C	

Intersection Summary			
HCM Average Control Delay	20.1	HCM Level of Service	C
HCM Volume to Capacity ratio	0.50		
Actuated Cycle Length (s)	75.0	Sum of lost time (s)	12.0
Intersection Capacity Utilization	67.7%	ICU Level of Service	C
Analysis Period (min)	15		

c Critical Lane Group

Movement	EBT	EBR	WBL	WBT	NBL	NBR
Lane Configurations						
Sign Control	Free			Free	Stop	
Grade	0%			0%	0%	
Volume (veh/h)	0	57	0	0	33	0
Peak Hour Factor	0.95	0.95	0.95	0.95	0.95	0.95
Hourly flow rate (vph)	0	60	0	0	35	0
Pedestrians						
Lane Width (ft)						
Walking Speed (ft/s)						
Percent Blockage						
Right turn flare (veh)						
Median type					None	
Median storage veh)						
Upstream signal (ft)				854		
pX, platoon unblocked						
vC, conflicting volume			60		30	30
vC1, stage 1 conf vol						
vC2, stage 2 conf vol						
vCu, unblocked vol			60		30	30
tC, single (s)			4.1		6.8	6.9
tC, 2 stage (s)						
tF (s)			2.2		3.5	3.3
p0 queue free %			100		96	100
cM capacity (veh/h)			1556		986	1044

Direction, Lane #	EB 1	EB 2	WB 1	WB 2	NB 1
Volume Total	0	60	0	0	35
Volume Left	0	0	0	0	35
Volume Right	0	60	0	0	0
cSH	1700	1700	1700	1700	986
Volume to Capacity	0.00	0.04	0.00	0.00	0.04
Queue Length 95th (ft)	0	0	0	0	3
Control Delay (s)	0.0	0.0	0.0	0.0	8.8
Lane LOS					A
Approach Delay (s)	0.0		0.0		8.8
Approach LOS					A

Intersection Summary			
Average Delay	3.2		
Intersection Capacity Utilization	13.3%	ICU Level of Service	A
Analysis Period (min)	15		

Year 2035 Build PM Peak Hour
City of San Bernardino
Downtown San Bernardino Passenger Rail Project (With 3rd St Closure)

Level Of Service Computation Report
2000 HCM Unsignalized Method (Base Volume Alternative)

Intersection #5 J St and 2nd St

Average Delay (sec/veh): 261.1 Worst Case Level Of Service: F[4390.7]

Street Name:	J St						2nd St					
Approach:	North Bound			South Bound			East Bound			West Bound		
Movement:	L	T	R	L	T	R	L	T	R	L	T	R
Control:	Stop Sign			Stop Sign			Uncontrolled			Uncontrolled		
Rights:	Include			Include			Include			Include		
Lanes:	0 0 1! 0 0			0 0 1! 0 0			1 0 1 1 0			1 0 1 1 0		
Volume Module:												
Base Vol:	21	1	265	100	8	5	2	1096	39	223	736	57
Growth Adj:	1.00	1.00	1.00	1.00	1.00	1.00	1.00	1.00	1.00	1.00	1.00	1.00
Initial Bse:	21	1	265	100	8	5	2	1096	39	223	736	57
User Adj:	1.00	1.00	1.00	1.00	1.00	1.00	1.00	1.00	1.00	1.00	1.00	1.00
PHF Adj:	0.95	0.95	0.95	0.95	0.95	0.95	0.95	0.95	0.95	0.95	0.95	0.95
PHF Volume:	22	1	279	105	8	5	2	1154	41	235	775	60
Reduct Vol:	0	0	0	0	0	0	0	0	0	0	0	0
FinalVolume:	22	1	279	105	8	5	2	1154	41	235	775	60
Critical Gap Module:												
Critical Gp:	7.5	6.5	6.9	7.5	6.5	6.9	4.1	xxxx	xxxxx	4.1	xxxx	xxxxx
FollowUpTim:	3.5	4.0	3.3	3.5	4.0	3.3	2.2	xxxx	xxxxx	2.2	xxxx	xxxxx
Capacity Module:												
Cnflict Vol:	2039	2483	597	1856	2473	417	835	xxxx	xxxxx	1195	xxxx	xxxxx
Potent Cap.:	34	30	451	47	30	590	807	xxxx	xxxxx	591	xxxx	xxxxx
Move Cap.:	15	18	451	12	18	590	807	xxxx	xxxxx	591	xxxx	xxxxx
Volume/Cap:	1.45	0.06	0.62	8.98	0.46	0.01	0.00	xxxx	xxxx	0.40	xxxx	xxxx
Level Of Service Module:												
2Way95thQ:	xxxx	xxxx	xxxxx	xxxx	xxxx	xxxxx	0.0	xxxx	xxxxx	1.9	xxxx	xxxxx
Control Del:	xxxxx	xxxx	xxxxx	xxxxx	xxxx	xxxxx	9.5	xxxx	xxxxx	15.0	xxxx	xxxxx
LOS by Move:	*	*	*	*	*	*	A	*	*	C	*	*
Movement:	LT -	LTR -	RT	LT -	LTR -	RT	LT -	LTR -	RT	LT -	LTR -	RT
Shared Cap.:	xxxx	142	xxxxx	xxxx	13	xxxxx	xxxx	xxxx	xxxxx	xxxx	xxxx	xxxxx
SharedQueue:	xxxxx	24.6	xxxxx	xxxxx	16.1	xxxxx	xxxxx	xxxx	xxxxx	xxxxx	xxxx	xxxxx
Shrd ConDel:	xxxxx	582	xxxxx	xxxxx	4391	xxxxx	xxxxx	xxxx	xxxxx	xxxxx	xxxx	xxxxx
Shared LOS:	*	F	*	*	F	*	*	*	*	*	*	*
ApproachDel:	582.2			4390.7			xxxxxx			xxxxxx		
ApproachLOS:	F			F			*			*		

Note: Queue reported is the number of cars per lane.

Year 2035 Build PM Peak Hour
City of San Bernardino
Downtown San Bernardino Passenger Rail Project (With 3rd St Closure)

Level Of Service Computation Report
2000 HCM Unsignalized Method (Base Volume Alternative)

Intersection #6 J St and Rialto Ave

Average Delay (sec/veh): OVERFLOW Worst Case Level Of Service: F[xxxxx]

Street Name:	J St						Rialto Ave					
Approach:	North Bound			South Bound			East Bound			West Bound		
Movement:	L	T	R	L	T	R	L	T	R	L	T	R
Control:	Stop Sign			Stop Sign			Uncontrolled			Uncontrolled		
Rights:	Include			Include			Include			Include		
Lanes:	0 0 1! 0 0			0 0 1! 0 0			0 1 0 1 0			0 1 0 1 0		
Volume Module:												
Base Vol:	29	117	63	142	62	22	84	474	9	113	710	60
Growth Adj:	1.00	1.00	1.00	1.00	1.00	1.00	1.00	1.00	1.00	1.00	1.00	1.00
Initial Bse:	29	117	63	142	62	22	84	474	9	113	710	60
User Adj:	1.00	1.00	1.00	1.00	1.00	1.00	1.00	1.00	1.00	1.00	1.00	1.00
PHF Adj:	0.97	0.97	0.97	0.97	0.97	0.97	0.97	0.97	0.97	0.97	0.97	0.97
PHF Volume:	30	121	65	146	64	23	87	489	9	116	732	62
Reduct Vol:	0	0	0	0	0	0	0	0	0	0	0	0
FinalVolume:	30	121	65	146	64	23	87	489	9	116	732	62
Critical Gap Module:												
Critical Gp:	7.5	6.5	6.9	7.5	6.5	6.9	4.1	xxxx	xxxxx	4.1	xxxx	xxxxx
FollowUpTim:	3.5	4.0	3.3	3.5	4.0	3.3	2.2	xxxx	xxxxx	2.2	xxxx	xxxxx
Capacity Module:												
Cnflict Vol:	1297	1693	249	1474	1667	397	794	xxxx	xxxxx	498	xxxx	xxxxx
Potent Cap.:	121	94	757	90	97	608	836	xxxx	xxxxx	1076	xxxx	xxxxx
Move Cap.:	30	74	757	0	76	608	836	xxxx	xxxxx	1076	xxxx	xxxxx
Volume/Cap:	1.00	1.64	0.09	xxxx	0.84	0.04	0.10	xxxx	xxxx	0.11	xxxx	xxxx
Level Of Service Module:												
2Way95thQ:	xxxx	xxxx	xxxxx	xxxx	xxxx	xxxxx	0.3	xxxx	xxxxx	0.4	xxxx	xxxxx
Control Del:	xxxxx	xxxx	xxxxx	xxxxx	xxxx	xxxxx	9.8	xxxx	xxxxx	8.7	xxxx	xxxxx
LOS by Move:	*	*	*	*	*	*	A	*	*	A	*	*
Movement:	LT	LTR	RT	LT	LTR	RT	LT	LTR	RT	LT	LTR	RT
Shared Cap.:	xxxx	79	xxxxx	xxxx	0	xxxxx	xxxx	xxxx	xxxxx	xxxx	xxxx	xxxxx
SharedQueue:	xxxxx	20.9	xxxxx	xxxxx	xxxx	xxxxx	0.3	xxxx	xxxxx	0.4	xxxx	xxxxx
Shrd ConDel:	xxxxx	891	xxxxx	xxxxx	xxxx	xxxxx	9.8	xxxx	xxxxx	8.7	xxxx	xxxxx
Shared LOS:	*	F	*	*	*	*	A	*	*	A	*	*
ApproachDel:	891.5			xxxxxx			xxxxxx			xxxxxx		
ApproachLOS:	F			F			*			*		

Note: Queue reported is the number of cars per lane.

Movement	EBL	EBT	EBR	WBL	WBT	WBR	NBL	NBT	NBR	SBL	SBT	SBR
Lane Configurations												
Ideal Flow (vphpl)	1800	1900	1900	1800	1900	1900	1900	1900	1900	1900	1900	1900
Total Lost time (s)	4.0	4.0		4.0	4.0			4.0	4.0		4.0	4.0
Lane Util. Factor	1.00	*1.00		1.00	*1.00			*1.00	1.00		*1.00	1.00
Frt	1.00	1.00		1.00	1.00			1.00	1.00		1.00	1.00
Flt Protected	1.00	1.00		1.00	1.00			1.00	1.00		1.00	1.00
Satd. Flow (prot)	1800	3800		1800	3800			3800	1900		1900	1900
Flt Permitted	1.00	1.00		1.00	1.00			1.00	1.00		1.00	1.00
Satd. Flow (perm)	1800	3800		1800	3800			3800	1900		1900	1900
Volume (vph)	44	1154	45	95	961	13	28	1	6	8	23	8
Peak-hour factor, PHF	0.95	0.95	0.95	0.95	0.95	0.95	0.95	0.95	0.95	0.95	0.95	0.95
Adj. Flow (vph)	46	1215	47	100	1012	14	29	1	6	8	24	8
RTOR Reduction (vph)	0	4	0	0	1	0	0	0	4	0	0	6
Lane Group Flow (vph)	46	1258	0	100	1025	0	0	30	2	0	32	2
Turn Type	Perm			Perm			Perm		Perm	Perm		Perm
Protected Phases		4			8			2			6	
Permitted Phases	4			8			2		2	6		6
Actuated Green, G (s)	48.0	48.0		48.0	48.0			19.0	19.0		19.0	19.0
Effective Green, g (s)	48.0	48.0		48.0	48.0			19.0	19.0		19.0	19.0
Actuated g/C Ratio	0.64	0.64		0.64	0.64			0.25	0.25		0.25	0.25
Clearance Time (s)	4.0	4.0		4.0	4.0			4.0	4.0		4.0	4.0
Lane Grp Cap (vph)	1152	2432		1152	2432			963	481		481	481
v/s Ratio Prot		c0.33			0.27							
v/s Ratio Perm	0.03			0.06				0.01	0.00		0.02	0.00
v/c Ratio	0.04	0.52		0.09	0.42			0.03	0.00		0.07	0.00
Uniform Delay, d1	5.0	7.3		5.1	6.7			21.1	20.9		21.3	20.9
Progression Factor	1.00	1.00		0.73	0.76			1.14	1.19		1.00	1.00
Incremental Delay, d2	0.1	0.8		0.1	0.5			0.1	0.0		0.3	0.0
Delay (s)	5.1	8.1		3.9	5.6			24.0	24.9		21.5	20.9
Level of Service	A	A		A	A			C	C		C	C
Approach Delay (s)		7.9			5.4			24.2			21.4	
Approach LOS		A			A			C			C	

Intersection Summary			
HCM Average Control Delay	7.3	HCM Level of Service	A
HCM Volume to Capacity ratio	0.39		
Actuated Cycle Length (s)	75.0	Sum of lost time (s)	8.0
Intersection Capacity Utilization	57.1%	ICU Level of Service	B
Analysis Period (min)	15		

c Critical Lane Group

Movement	EBL	EBT	WBT	WBR	SBL	SBR
Lane Configurations						
Sign Control		Free	Free		Stop	
Grade		0%	0%		0%	
Volume (veh/h)	0	602	648	65	0	208
Peak Hour Factor	0.95	0.95	0.95	0.95	0.95	0.95
Hourly flow rate (vph)	0	634	682	68	0	219
Pedestrians						
Lane Width (ft)						
Walking Speed (ft/s)						
Percent Blockage						
Right turn flare (veh)						
Median type					None	
Median storage veh)						
Upstream signal (ft)						
pX, platoon unblocked						
vC, conflicting volume	751				1033	375
vC1, stage 1 conf vol						
vC2, stage 2 conf vol						
vCu, unblocked vol	751				1033	375
tC, single (s)	4.1				6.8	6.9
tC, 2 stage (s)						
tF (s)	2.2				3.5	3.3
p0 queue free %	100				100	65
cM capacity (veh/h)	868				232	628

Direction, Lane #	EB 1	EB 2	WB 1	WB 2	SB 1
Volume Total	317	317	455	296	219
Volume Left	0	0	0	0	0
Volume Right	0	0	0	68	219
cSH	1700	1700	1700	1700	628
Volume to Capacity	0.19	0.19	0.27	0.17	0.35
Queue Length 95th (ft)	0	0	0	0	39
Control Delay (s)	0.0	0.0	0.0	0.0	13.8
Lane LOS					B
Approach Delay (s)	0.0		0.0		13.8
Approach LOS					B

Intersection Summary			
Average Delay	1.9		
Intersection Capacity Utilization	39.5%	ICU Level of Service	A
Analysis Period (min)	15		

Movement	EBL	EBT	EBR	WBL	WBT	WBR	NBL	NBT	NBR	SBL	SBT	SBR
Lane Configurations												
Ideal Flow (vphpl)	1900	1900	1900	1800	1900	1900	1900	1900	1900	1900	1900	1800
Total Lost time (s)		4.0		4.0	4.0						4.0	4.0
Lane Util. Factor		*1.00		1.00	*1.00						*1.00	*1.00
Frt		1.00		1.00	1.00						1.00	1.00
Flt Protected		1.00		1.00	1.00						1.00	1.00
Satd. Flow (prot)		3800		1800	3800						3800	3600
Flt Permitted		1.00		1.00	1.00						1.00	1.00
Satd. Flow (perm)		3800		1800	3800						3800	3600
Volume (vph)	0	18	0	240	7	0	0	0	0	340	426	3
Peak-hour factor, PHF	0.95	0.95	0.95	0.95	0.95	0.95	0.95	0.95	0.95	0.95	0.95	0.95
Adj. Flow (vph)	0	19	0	253	7	0	0	0	0	358	448	3
RTOR Reduction (vph)	0	0	0	0	0	0	0	0	0	0	0	2
Lane Group Flow (vph)	0	19	0	253	7	0	0	0	0	0	806	1
Turn Type				Prot						Split		Perm
Protected Phases		4		3	8					6	6	
Permitted Phases												6
Actuated Green, G (s)		15.0		30.0	49.0						33.0	33.0
Effective Green, g (s)		15.0		30.0	49.0						33.0	33.0
Actuated g/C Ratio		0.17		0.33	0.54						0.37	0.37
Clearance Time (s)		4.0		4.0	4.0						4.0	4.0
Lane Grp Cap (vph)		633		600	2069						1393	1320
v/s Ratio Prot		c0.01		c0.14	0.00						c0.21	
v/s Ratio Perm												0.00
v/c Ratio		0.03		0.42	0.00						0.58	0.00
Uniform Delay, d1		31.4		23.3	9.4						22.9	18.1
Progression Factor		1.00		0.46	0.10						1.00	1.00
Incremental Delay, d2		0.1		2.2	0.0						1.8	0.0
Delay (s)		31.5		12.8	0.9						24.7	18.1
Level of Service		C		B	A						C	B
Approach Delay (s)		31.5			12.5			0.0			24.6	
Approach LOS		C			B			A			C	

Intersection Summary			
HCM Average Control Delay	21.9	HCM Level of Service	C
HCM Volume to Capacity ratio	0.41		
Actuated Cycle Length (s)	90.0	Sum of lost time (s)	12.0
Intersection Capacity Utilization	76.4%	ICU Level of Service	D
Analysis Period (min)	15		

c Critical Lane Group

Movement	EBL	EBT	EBR	WBL	WBT	WBR	NBL	NBT	NBR	SBL	SBT	SBR
Lane Configurations												
Ideal Flow (vphpl)	1900	1900	1900	1700	1900	1900	1900	1900	1900	1800	1900	1900
Total Lost time (s)		4.0	4.0	4.0	4.0					4.0	4.0	4.0
Lane Util. Factor		*1.00	1.00	*1.00	*1.00					*1.00	*1.00	*1.00
Frt		1.00	1.00	1.00	1.00					1.00	1.00	1.00
Flt Protected		1.00	1.00	1.00	1.00					1.00	1.00	1.00
Satd. Flow (prot)		5700	1900	3400	3800					1800	1900	1900
Flt Permitted		1.00	1.00	1.00	1.00					1.00	1.00	1.00
Satd. Flow (perm)		5700	1900	3400	3800					1800	1900	1900
Volume (vph)	0	909	189	897	511	0	0	0	0	105	0	562
Peak-hour factor, PHF	0.95	0.95	0.95	0.95	0.95	0.95	0.95	0.95	0.95	0.95	0.95	0.95
Adj. Flow (vph)	0	957	199	944	538	0	0	0	0	111	0	592
RTOR Reduction (vph)	0	0	149	0	0	0	0	0	0	0	241	241
Lane Group Flow (vph)	0	957	50	944	538	0	0	0	0	111	55	55
Turn Type			Perm	Prot						Split		Perm
Protected Phases		4		3	8					6	6	
Permitted Phases			4									6
Actuated Green, G (s)		19.0	19.0	30.0	53.0					14.0	14.0	14.0
Effective Green, g (s)		19.0	19.0	30.0	53.0					14.0	14.0	14.0
Actuated g/C Ratio		0.25	0.25	0.40	0.71					0.19	0.19	0.19
Clearance Time (s)		4.0	4.0	4.0	4.0					4.0	4.0	4.0
Lane Grp Cap (vph)		1444	481	1360	2685					336	355	355
v/s Ratio Prot		c0.17		c0.28	0.14					c0.06	0.03	
v/s Ratio Perm			0.03									0.03
v/c Ratio		0.66	0.10	0.69	0.20					0.33	0.16	0.16
Uniform Delay, d1		25.1	21.5	18.7	3.8					26.4	25.5	25.5
Progression Factor		0.72	1.64	1.00	1.00					1.00	1.00	1.00
Incremental Delay, d2		2.1	0.4	2.9	0.2					2.6	0.9	0.9
Delay (s)		20.2	35.6	21.6	3.9					29.1	26.5	26.5
Level of Service		C	D	C	A					C	C	C
Approach Delay (s)		22.8			15.2			0.0			26.9	
Approach LOS		C			B			A			C	

Intersection Summary			
HCM Average Control Delay	20.3	HCM Level of Service	C
HCM Volume to Capacity ratio	0.60		
Actuated Cycle Length (s)	75.0	Sum of lost time (s)	12.0
Intersection Capacity Utilization	64.8%	ICU Level of Service	C
Analysis Period (min)	15		

c Critical Lane Group

Movement	EBL	EBT	EBR	WBL	WBT	WBR	NBL	NBT	NBR	SBL	SBT	SBR
Lane Configurations												
Ideal Flow (vphpl)	1800	1900	1900	1900	1900	1900	1900	1900	1900	1900	1900	1900
Total Lost time (s)	4.0	4.0			4.0	4.0		4.0				
Lane Util. Factor	1.00	*1.00			*1.00	1.00		*1.00				
Frt	1.00	1.00			1.00	1.00		1.00				
Flt Protected	1.00	1.00			1.00	1.00		1.00				
Satd. Flow (prot)	1800	3800			5700	1900		3800				
Flt Permitted	1.00	1.00			1.00	1.00		1.00				
Satd. Flow (perm)	1800	3800			5700	1900		3800				
Volume (vph)	15	346	0	0	246	588	9	722	203	0	0	0
Peak-hour factor, PHF	0.95	0.95	0.95	0.95	0.95	0.95	0.95	0.95	0.95	0.95	0.95	0.95
Adj. Flow (vph)	16	364	0	0	259	619	9	760	214	0	0	0
RTOR Reduction (vph)	0	0	0	0	0	118	0	31	0	0	0	0
Lane Group Flow (vph)	16	364	0	0	259	501	0	952	0	0	0	0
Turn Type	Prot					Perm	Split					
Protected Phases	7	4			8		2	2				
Permitted Phases						8						
Actuated Green, G (s)	7.0	49.0			38.0	38.0		33.0				
Effective Green, g (s)	7.0	49.0			38.0	38.0		33.0				
Actuated g/C Ratio	0.08	0.54			0.42	0.42		0.37				
Clearance Time (s)	4.0	4.0			4.0	4.0		4.0				
Lane Grp Cap (vph)	140	2069			2407	802		1393				
v/s Ratio Prot	0.01	c0.10			0.05			c0.25				
v/s Ratio Perm						c0.26						
v/c Ratio	0.11	0.18			0.11	0.62		0.68				
Uniform Delay, d1	38.6	10.3			15.7	20.4		24.1				
Progression Factor	0.41	1.26			1.00	1.00		1.47				
Incremental Delay, d2	1.4	0.2			0.1	3.7		2.6				
Delay (s)	17.2	13.1			15.8	24.1		38.1				
Level of Service	B	B			B	C		D				
Approach Delay (s)		13.3			21.6			38.1			0.0	
Approach LOS		B			C			D			A	

Intersection Summary			
HCM Average Control Delay	27.4	HCM Level of Service	C
HCM Volume to Capacity ratio	0.61		
Actuated Cycle Length (s)	90.0	Sum of lost time (s)	12.0
Intersection Capacity Utilization	76.4%	ICU Level of Service	D
Analysis Period (min)	15		

c Critical Lane Group

Movement	EBL	EBT	EBR	WBL	WBT	WBR	NBL	NBT	NBR	SBL	SBT	SBR
Lane Configurations												
Ideal Flow (vphpl)	1700	1900	1900	1900	1900	1900	1800	1900	1900	1900	1900	1900
Total Lost time (s)	4.0	4.0			4.0	4.0	4.0	4.0	4.0			
Lane Util. Factor	*1.00	*1.00			*1.00	1.00	*1.00	*1.00	*1.00			
Frt	1.00	1.00			1.00	1.00	1.00	1.00	1.00			
Flt Protected	1.00	1.00			1.00	1.00	1.00	1.00	1.00			
Satd. Flow (prot)	3400	3800			7600	1900	1800	1900	1900			
Flt Permitted	1.00	1.00			1.00	1.00	1.00	1.00	1.00			
Satd. Flow (perm)	3400	3800			7600	1900	1800	1900	1900			
Volume (vph)	482	543	0	0	1386	446	21	6	405	0	0	0
Peak-hour factor, PHF	0.95	0.95	0.95	0.95	0.95	0.95	0.95	0.95	0.95	0.95	0.95	0.95
Adj. Flow (vph)	507	572	0	0	1459	469	22	6	426	0	0	0
RTOR Reduction (vph)	0	0	0	0	0	0	0	163	169	0	0	0
Lane Group Flow (vph)	507	572	0	0	1459	469	22	52	48	0	0	0
Turn Type	Prot					Free	Split		Prot			
Protected Phases	7	4			8		2	2	2			
Permitted Phases						Free						
Actuated Green, G (s)	28.0	62.0			30.0	90.0	20.0	20.0	20.0			
Effective Green, g (s)	28.0	62.0			30.0	90.0	20.0	20.0	20.0			
Actuated g/C Ratio	0.31	0.69			0.33	1.00	0.22	0.22	0.22			
Clearance Time (s)	4.0	4.0			4.0		4.0	4.0	4.0			
Lane Grp Cap (vph)	1058	2618			2533	1900	400	422	422			
v/s Ratio Prot	c0.15	0.15			c0.19		0.01	0.03	0.03			
v/s Ratio Perm						c0.25						
v/c Ratio	0.48	0.22			0.58	0.25	0.06	0.12	0.11			
Uniform Delay, d1	25.1	5.1			24.8	0.0	27.6	28.0	27.9			
Progression Factor	1.00	1.00			1.00	1.00	1.00	1.00	1.00			
Incremental Delay, d2	1.6	0.2			1.0	0.3	0.3	0.6	0.5			
Delay (s)	26.7	5.3			25.7	0.3	27.8	28.6	28.5			
Level of Service	C	A			C	A	C	C	C			
Approach Delay (s)		15.3			19.5			28.5			0.0	
Approach LOS		B			B			C			A	

Intersection Summary			
HCM Average Control Delay	19.4	HCM Level of Service	B
HCM Volume to Capacity ratio	0.45		
Actuated Cycle Length (s)	90.0	Sum of lost time (s)	8.0
Intersection Capacity Utilization	64.8%	ICU Level of Service	C
Analysis Period (min)	15		

c Critical Lane Group

Movement	EBL	EBT	EBR	WBL	WBT	WBR	NBL	NBT	NBR	SBL	SBT	SBR
Lane Configurations												
Ideal Flow (vphpl)	1800	1900	1900	1800	1900	1900	1800	1900	1900	1800	1900	1900
Total Lost time (s)	4.0	4.0		4.0	4.0		4.0	4.0		4.0	4.0	
Lane Util. Factor	1.00	*1.00		1.00	*1.00		1.00	*1.00		1.00	*1.00	
Frt	1.00	1.00		1.00	1.00		1.00	1.00		1.00	1.00	
Flt Protected	1.00	1.00		1.00	1.00		1.00	1.00		1.00	1.00	
Satd. Flow (prot)	1800	3800		1800	3800		1800	3800		1800	3800	
Flt Permitted	1.00	1.00		1.00	1.00		1.00	1.00		1.00	1.00	
Satd. Flow (perm)	1800	3800		1800	3800		1800	3800		1800	3800	
Volume (vph)	91	187	157	104	401	6	180	320	103	7	188	98
Peak-hour factor, PHF	0.95	0.95	0.95	0.95	0.95	0.95	0.95	0.95	0.95	0.95	0.95	0.95
Adj. Flow (vph)	96	197	165	109	422	6	189	337	108	7	198	103
RTOR Reduction (vph)	0	121	0	0	1	0	0	45	0	0	70	0
Lane Group Flow (vph)	96	241	0	109	427	0	189	400	0	7	231	0
Turn Type	Prot			Prot			Perm			Perm		
Protected Phases	5	2		1	6			8			4	
Permitted Phases							8			4		
Actuated Green, G (s)	18.0	20.0		19.0	21.0		24.0	24.0		24.0	24.0	
Effective Green, g (s)	18.0	20.0		19.0	21.0		24.0	24.0		24.0	24.0	
Actuated g/C Ratio	0.24	0.27		0.25	0.28		0.32	0.32		0.32	0.32	
Clearance Time (s)	4.0	4.0		4.0	4.0		4.0	4.0		4.0	4.0	
Lane Grp Cap (vph)	432	1013		456	1064		576	1216		576	1216	
v/s Ratio Prot	0.05	0.06		c0.06	c0.11			c0.11			0.06	
v/s Ratio Perm							0.10			0.00		
v/c Ratio	0.22	0.24		0.24	0.40		0.33	0.33		0.01	0.19	
Uniform Delay, d1	22.9	21.5		22.3	21.9		19.4	19.4		17.4	18.5	
Progression Factor	1.00	1.00		1.00	1.00		1.00	1.00		1.00	1.00	
Incremental Delay, d2	1.2	0.6		1.2	1.1		1.5	0.7		0.0	0.3	
Delay (s)	24.1	22.1		23.5	23.0		20.9	20.1		17.4	18.8	
Level of Service	C	C		C	C		C	C		B	B	
Approach Delay (s)		22.5			23.1			20.3			18.8	
Approach LOS		C			C			C			B	

Intersection Summary			
HCM Average Control Delay	21.4	HCM Level of Service	C
HCM Volume to Capacity ratio	0.31		
Actuated Cycle Length (s)	75.0	Sum of lost time (s)	8.0
Intersection Capacity Utilization	48.8%	ICU Level of Service	A
Analysis Period (min)	15		

c Critical Lane Group

Movement	EBL	EBT	EBR	WBL	WBT	WBR	NBL	NBT	NBR	SBL	SBT	SBR
Lane Configurations												
Ideal Flow (vphpl)	1800	1900	1900	1800	1900	1900	1800	1900	1900	1800	1900	1900
Total Lost time (s)	4.0	4.0		4.0	4.0		4.0	4.0		4.0	4.0	
Lane Util. Factor	1.00	*1.00		1.00	*1.00		1.00	*1.00		1.00	*1.00	
Frt	1.00	1.00		1.00	1.00		1.00	1.00		1.00	1.00	
Flt Protected	1.00	1.00		1.00	1.00		1.00	1.00		1.00	1.00	
Satd. Flow (prot)	1800	5700		1800	5700		1800	3800		1800	3800	
Flt Permitted	1.00	1.00		1.00	1.00		1.00	1.00		1.00	1.00	
Satd. Flow (perm)	1800	5700		1800	5700		1800	3800		1800	3800	
Volume (vph)	202	738	68	82	1473	104	415	276	52	72	201	163
Peak-hour factor, PHF	0.95	0.95	0.95	0.95	0.95	0.95	0.95	0.95	0.95	0.95	0.95	0.95
Adj. Flow (vph)	213	777	72	86	1551	109	437	291	55	76	212	172
RTOR Reduction (vph)	0	13	0	0	10	0	0	18	0	0	151	0
Lane Group Flow (vph)	213	836	0	86	1650	0	437	328	0	76	233	0
Turn Type	Prot			Prot			pm+pt			pm+pt		
Protected Phases	7	4		3	8		5	2		1	6	
Permitted Phases							2			6		
Actuated Green, G (s)	16.0	39.0		9.0	32.0		32.0	22.0		17.0	11.0	
Effective Green, g (s)	16.0	39.0		9.0	32.0		32.0	22.0		17.0	11.0	
Actuated g/C Ratio	0.17	0.42		0.10	0.35		0.35	0.24		0.18	0.12	
Clearance Time (s)	4.0	4.0		4.0	4.0		4.0	4.0		4.0	4.0	
Lane Grp Cap (vph)	313	2416		176	1983		626	909		333	454	
v/s Ratio Prot	c0.12	0.15		0.05	c0.29		c0.13	0.09		0.01	0.06	
v/s Ratio Perm							0.11			0.03		
v/c Ratio	0.68	0.35		0.49	0.83		0.70	0.36		0.23	0.51	
Uniform Delay, d1	35.6	17.9		39.3	27.5		27.1	29.1		31.9	38.0	
Progression Factor	1.00	1.00		1.00	1.00		1.00	1.00		1.00	1.00	
Incremental Delay, d2	11.4	0.4		9.4	4.3		6.4	1.1		1.6	4.1	
Delay (s)	47.0	18.3		48.7	31.8		33.5	30.3		33.5	42.1	
Level of Service	D	B		D	C		C	C		C	D	
Approach Delay (s)		24.0			32.6			32.1			40.7	
Approach LOS		C			C			C			D	

Intersection Summary			
HCM Average Control Delay	31.2	HCM Level of Service	C
HCM Volume to Capacity ratio	0.75		
Actuated Cycle Length (s)	92.0	Sum of lost time (s)	12.0
Intersection Capacity Utilization	91.0%	ICU Level of Service	E
Analysis Period (min)	15		

c Critical Lane Group

Movement	EBL	EBT	EBR	WBL	WBT	WBR	NBL	NBT	NBR	SBL	SBT	SBR
Lane Configurations												
Ideal Flow (vphpl)	1800	1900	1900	1800	1900	1900	1800	1900	1900	1800	1900	1900
Total Lost time (s)	4.0	4.0		4.0	4.0		4.0	4.0		4.0	4.0	
Lane Util. Factor	1.00	*1.00		1.00	*1.00		1.00	*1.00		1.00	*1.00	
Frt	1.00	1.00		1.00	1.00		1.00	1.00		1.00	1.00	
Flt Protected	1.00	1.00		1.00	1.00		1.00	1.00		1.00	1.00	
Satd. Flow (prot)	1800	3800		1800	3800		1800	3800		1800	3800	
Flt Permitted	1.00	1.00		1.00	1.00		1.00	1.00		1.00	1.00	
Satd. Flow (perm)	1800	3800		1800	3800		1800	3800		1800	3800	
Volume (vph)	24	441	17	48	650	332	78	278	61	168	118	54
Peak-hour factor, PHF	0.95	0.95	0.95	0.95	0.95	0.95	0.95	0.95	0.95	0.95	0.95	0.95
Adj. Flow (vph)	25	464	18	51	684	349	82	293	64	177	124	57
RTOR Reduction (vph)	0	4	0	0	100	0	0	27	0	0	37	0
Lane Group Flow (vph)	25	478	0	51	933	0	82	330	0	177	144	0
Turn Type	Perm			Perm			Perm			Perm		
Protected Phases		4			8			2			6	
Permitted Phases	4			8			2			6		
Actuated Green, G (s)	41.0	41.0		41.0	41.0		26.0	26.0		26.0	26.0	
Effective Green, g (s)	41.0	41.0		41.0	41.0		26.0	26.0		26.0	26.0	
Actuated g/C Ratio	0.55	0.55		0.55	0.55		0.35	0.35		0.35	0.35	
Clearance Time (s)	4.0	4.0		4.0	4.0		4.0	4.0		4.0	4.0	
Lane Grp Cap (vph)	984	2077		984	2077		624	1317		624	1317	
v/s Ratio Prot		0.13			c0.25			0.09			0.04	
v/s Ratio Perm	0.01			0.03			0.05			c0.10		
v/c Ratio	0.03	0.23		0.05	0.45		0.13	0.25		0.28	0.11	
Uniform Delay, d1	7.8	8.8		7.9	10.2		16.8	17.5		17.8	16.6	
Progression Factor	0.58	0.58		0.63	0.39		1.00	1.00		1.00	1.00	
Incremental Delay, d2	0.0	0.3		0.1	0.6		0.4	0.5		1.1	0.2	
Delay (s)	4.6	5.4		5.1	4.7		17.2	18.0		18.9	16.8	
Level of Service	A	A		A	A		B	B		B	B	
Approach Delay (s)		5.4			4.7			17.8			17.8	
Approach LOS		A			A			B			B	

Intersection Summary			
HCM Average Control Delay	9.2	HCM Level of Service	A
HCM Volume to Capacity ratio	0.38		
Actuated Cycle Length (s)	75.0	Sum of lost time (s)	8.0
Intersection Capacity Utilization	64.7%	ICU Level of Service	C
Analysis Period (min)	15		

c Critical Lane Group

Movement	EBL	EBT	EBR	WBL	WBT	WBR	NBL	NBT	NBR	SBL	SBT	SBR
Lane Configurations												
Sign Control		Stop			Stop			Free			Free	
Grade		0%			0%			0%			0%	
Volume (veh/h)	4	0	4	55	0	17	0	257	34	13	241	0
Peak Hour Factor	0.95	0.95	0.95	0.95	0.95	0.95	0.95	0.95	0.95	0.95	0.95	0.95
Hourly flow rate (vph)	4	0	4	58	0	18	0	271	36	14	254	0
Pedestrians												
Lane Width (ft)												
Walking Speed (ft/s)												
Percent Blockage												
Right turn flare (veh)												
Median type		None			None							
Median storage veh)												
Upstream signal (ft)											931	
pX, platoon unblocked												
vC, conflicting volume	434	587	127	447	569	153	254			306		
vC1, stage 1 conf vol												
vC2, stage 2 conf vol												
vCu, unblocked vol	434	587	127	447	569	153	254			306		
tC, single (s)	7.5	6.5	6.9	7.5	6.5	6.9	4.1			4.1		
tC, 2 stage (s)												
tF (s)	3.5	4.0	3.3	3.5	4.0	3.3	2.2			2.2		
p0 queue free %	99	100	100	88	100	98	100			99		
cM capacity (veh/h)	496	420	906	493	430	872	1323			1266		

Direction, Lane #	EB 1	WB 1	NB 1	NB 2	SB 1	SB 2
Volume Total	8	76	135	171	141	127
Volume Left	4	58	0	0	14	0
Volume Right	4	18	0	36	0	0
cSH	641	550	1323	1700	1266	1700
Volume to Capacity	0.01	0.14	0.00	0.10	0.01	0.07
Queue Length 95th (ft)	1	12	0	0	1	0
Control Delay (s)	10.7	12.6	0.0	0.0	0.8	0.0
Lane LOS	B	B			A	
Approach Delay (s)	10.7	12.6	0.0		0.4	
Approach LOS	B	B				

Intersection Summary			
Average Delay	1.8		
Intersection Capacity Utilization	29.2%	ICU Level of Service	A
Analysis Period (min)	15		

Year 2035 Build PM Peak Hour
City of San Bernardino
Downtown San Bernardino Passenger Rail Project (With 3rd St Closure)

Level Of Service Computation Report
2000 HCM Unsignalized Method (Base Volume Alternative)

Intersection #18 Parking Lot Entrance and Congress St

Average Delay (sec/veh): 7.1 Worst Case Level Of Service: A[9.2]

Street Name:	Parking Lot Entrance						Congress Street					
Approach:	North Bound			South Bound			East Bound			West Bound		
Movement:	L	T	R	L	T	R	L	T	R	L	T	R
Control:	Stop Sign			Stop Sign			Uncontrolled			Uncontrolled		
Rights:	Include			Include			Include			Include		
Lanes:	1 0 0 0 0			0 0 0 0 1			0 0 1! 0 0			0 0 0 0 0		
Volume Module:												
Base Vol:	25	0	0	0	0	47	14	0	25	0	0	0
Growth Adj:	1.00	1.00	1.00	1.00	1.00	1.00	1.00	1.00	1.00	1.00	1.00	1.00
Initial Bse:	25	0	0	0	0	47	14	0	25	0	0	0
User Adj:	1.00	1.00	1.00	1.00	1.00	1.00	1.00	1.00	1.00	1.00	1.00	1.00
PHF Adj:	0.95	0.95	0.95	0.95	0.95	0.95	0.95	0.95	0.95	0.95	0.95	0.95
PHF Volume:	26	0	0	0	0	49	15	0	26	0	0	0
Reduct Vol:	0	0	0	0	0	0	0	0	0	0	0	0
FinalVolume:	26	0	0	0	0	49	15	0	26	0	0	0
Critical Gap Module:												
Critical Gp:	7.1	xxxx	xxxxx	xxxxx	xxxx	6.2	4.1	xxxx	xxxxx	xxxxx	xxxx	xxxxx
FollowUpTim:	3.5	xxxx	xxxxx	xxxxx	xxxx	3.3	2.2	xxxx	xxxxx	xxxxx	xxxx	xxxxx
Capacity Module:												
Cnflict Vol:	43	xxxx	xxxxx	xxxx	xxxx	0	0	xxxx	xxxxx	xxxx	xxxx	xxxxx
Potent Cap.:	965	xxxx	xxxxx	xxxx	xxxx	900	900	xxxx	xxxxx	xxxx	xxxx	xxxxx
Move Cap.:	901	xxxx	xxxxx	xxxx	xxxx	900	900	xxxx	xxxxx	xxxx	xxxx	xxxxx
Volume/Cap:	0.03	xxxx	xxxx	xxxx	xxxx	0.05	0.02	xxxx	xxxx	xxxx	xxxx	xxxx
Level Of Service Module:												
2Way95thQ:	0.1	xxxx	xxxxx	xxxx	xxxx	0.2	0.0	xxxx	xxxxx	xxxx	xxxx	xxxxx
Control Del:	9.1	xxxx	xxxxx	xxxxx	xxxx	9.2	9.1	xxxx	xxxxx	xxxxx	xxxx	xxxxx
LOS by Move:	A	*	*	*	*	A	A	*	*	*	*	*
Movement:	LT	LTR	RT	LT	LTR	RT	LT	LTR	RT	LT	LTR	RT
Shared Cap.:	xxxx	xxxx	xxxxx	xxxx	xxxx	xxxxx	xxxx	xxxx	xxxxx	xxxx	xxxx	xxxxx
SharedQueue:	xxxxx	xxxx	xxxxx	xxxxx	xxxx	xxxxx	xxxxx	xxxx	xxxxx	xxxxx	xxxx	xxxxx
Shrd ConDel:	xxxxx	xxxx	xxxxx	xxxxx	xxxx	xxxxx	xxxxx	xxxx	xxxxx	xxxxx	xxxx	xxxxx
Shared LOS:	*	*	*	*	*	*	*	*	*	*	*	*
ApproachDel:	9.1			9.2			xxxxxx			xxxxxx		
ApproachLOS:	A			A			*			*		

Note: Queue reported is the number of cars per lane.

Movement	EBL	EBT	EBR	WBL	WBT	WBR	NBL	NBT	NBR	SBL	SBT	SBR
Lane Configurations												
Ideal Flow (vphpl)	1800	1900	1900	1800	1900	1900	1800	1900	1900	1800	1900	1900
Total Lost time (s)	4.0	4.0		4.0	4.0		4.0	4.0		4.0	4.0	4.0
Lane Util. Factor	1.00	*1.00		1.00	*1.00		1.00	1.00		1.00	*1.00	1.00
Frt	1.00	1.00		1.00	1.00		1.00	1.00		1.00	1.00	1.00
Flt Protected	1.00	1.00		1.00	1.00		1.00	1.00		1.00	1.00	1.00
Satd. Flow (prot)	1800	3800		1800	5700		1800	1900		1800	1900	1900
Flt Permitted	1.00	1.00		1.00	1.00		1.00	1.00		1.00	1.00	1.00
Satd. Flow (perm)	1800	3800		1800	5700		1800	1900		1800	1900	1900
Volume (vph)	157	627	65	128	1168	33	141	496	134	41	383	205
Peak-hour factor, PHF	0.95	0.95	0.95	0.95	0.95	0.95	0.95	0.95	0.95	0.95	0.95	0.95
Adj. Flow (vph)	165	660	68	135	1229	35	148	522	141	43	403	216
RTOR Reduction (vph)	0	11	0	0	5	0	0	13	0	0	0	132
Lane Group Flow (vph)	165	717	0	135	1259	0	148	650	0	43	403	84
Turn Type	Prot			Prot			pm+pt			pm+pt		Perm
Protected Phases	7	4		3	8		5	2		1	6	
Permitted Phases							2			6		6
Actuated Green, G (s)	7.0	18.0		6.0	17.0		35.0	29.0		35.0	29.0	29.0
Effective Green, g (s)	7.0	18.0		6.0	17.0		35.0	29.0		35.0	29.0	29.0
Actuated g/C Ratio	0.09	0.24		0.08	0.23		0.47	0.39		0.47	0.39	0.39
Clearance Time (s)	4.0	4.0		4.0	4.0		4.0	4.0		4.0	4.0	4.0
Lane Grp Cap (vph)	168	912		144	1292		936	735		936	735	735
v/s Ratio Prot	c0.09	0.19		0.07	c0.22		c0.01	c0.34		0.00	0.21	
v/s Ratio Perm							0.07			0.02		0.04
v/c Ratio	0.98	0.79		0.94	0.97		0.16	0.88		0.05	0.55	0.11
Uniform Delay, d1	33.9	26.7		34.3	28.8		12.2	21.4		14.4	17.9	14.8
Progression Factor	1.00	1.00		1.00	1.00		1.11	0.79		0.31	0.72	1.60
Incremental Delay, d2	64.9	6.8		59.9	19.7		0.2	8.8		0.1	2.3	0.2
Delay (s)	98.9	33.5		94.2	48.5		13.7	25.6		4.6	15.2	23.8
Level of Service	F	C		F	D		B	C		A	B	C
Approach Delay (s)		45.5			52.9			23.5			17.3	
Approach LOS		D			D			C			B	

Intersection Summary			
HCM Average Control Delay	38.6	HCM Level of Service	D
HCM Volume to Capacity ratio	0.85		
Actuated Cycle Length (s)	75.0	Sum of lost time (s)	16.0
Intersection Capacity Utilization	83.4%	ICU Level of Service	E
Analysis Period (min)	15		

c Critical Lane Group

Movement	EBL	EBT	EBR	WBL	WBT	WBR	NBL	NBT	NBR	SBL	SBT	SBR
Lane Configurations												
Ideal Flow (vphpl)	1800	1900	1900	1800	1900	1900	1800	1900	1900	1800	1900	1900
Total Lost time (s)	4.0	4.0	4.0	4.0	4.0		4.0	4.0		4.0	4.0	
Lane Util. Factor	1.00	*1.00	1.00	1.00	*1.00		1.00	*1.00		1.00	*1.00	
Frt	1.00	1.00	1.00	1.00	1.00		1.00	1.00		1.00	1.00	
Flt Protected	1.00	1.00	1.00	1.00	1.00		1.00	1.00		1.00	1.00	
Satd. Flow (prot)	1800	1900	1900	1800	3800		1800	1900		1800	1900	
Flt Permitted	1.00	1.00	1.00	1.00	1.00		1.00	1.00		1.00	1.00	
Satd. Flow (perm)	1800	1900	1900	1800	3800		1800	1900		1800	1900	
Volume (vph)	82	439	114	127	785	53	113	696	102	48	493	62
Peak-hour factor, PHF	0.95	0.95	0.95	0.95	0.95	0.95	0.95	0.95	0.95	0.95	0.95	0.95
Adj. Flow (vph)	86	462	120	134	826	56	119	733	107	51	519	65
RTOR Reduction (vph)	0	0	88	0	7	0	0	7	0	0	6	0
Lane Group Flow (vph)	86	462	32	134	875	0	119	833	0	51	578	0
Turn Type	Perm		Perm	Perm			pm+pt			pm+pt		
Protected Phases		4			8		5	2		1	6	
Permitted Phases	4		4	8			2			6		
Actuated Green, G (s)	20.0	20.0	20.0	20.0	20.0		43.0	37.0		43.0	37.0	
Effective Green, g (s)	20.0	20.0	20.0	20.0	20.0		43.0	37.0		43.0	37.0	
Actuated g/C Ratio	0.27	0.27	0.27	0.27	0.27		0.57	0.49		0.57	0.49	
Clearance Time (s)	4.0	4.0	4.0	4.0	4.0		4.0	4.0		4.0	4.0	
Lane Grp Cap (vph)	480	507	507	480	1013		1128	937		1128	937	
v/s Ratio Prot		c0.24			0.23		c0.01	c0.44		0.00	0.30	
v/s Ratio Perm	0.05		0.02	0.07			0.06			0.02		
v/c Ratio	0.18	0.91	0.06	0.28	0.86		0.11	0.89		0.05	0.62	
Uniform Delay, d1	21.2	26.6	20.5	21.8	26.2		8.7	17.1		12.8	13.8	
Progression Factor	1.02	1.06	1.80	0.78	0.82		1.00	1.00		1.27	0.96	
Incremental Delay, d2	0.8	22.7	0.2	1.4	9.6		0.2	12.3		0.1	2.4	
Delay (s)	22.5	50.8	37.1	18.5	31.1		8.9	29.5		16.3	15.6	
Level of Service	C	D	D	B	C		A	C		B	B	
Approach Delay (s)		44.7			29.4			26.9			15.7	
Approach LOS		D			C			C			B	

Intersection Summary			
HCM Average Control Delay	29.1	HCM Level of Service	C
HCM Volume to Capacity ratio	0.82		
Actuated Cycle Length (s)	75.0	Sum of lost time (s)	12.0
Intersection Capacity Utilization	90.0%	ICU Level of Service	E
Analysis Period (min)	15		

c Critical Lane Group

Movement	EBL	EBR	NBL	NBT	SBT	SBR
Lane Configurations						
Sign Control	Stop			Free	Free	
Grade	0%			0%	0%	
Volume (veh/h)	44	36	11	868	673	13
Peak Hour Factor	0.95	0.95	0.95	0.95	0.95	0.95
Hourly flow rate (vph)	46	38	12	914	708	14
Pedestrians						
Lane Width (ft)						
Walking Speed (ft/s)						
Percent Blockage						
Right turn flare (veh)						
Median type	None					
Median storage veh)						
Upstream signal (ft)					848	
pX, platoon unblocked						
vC, conflicting volume	1195	361	722			
vC1, stage 1 conf vol						
vC2, stage 2 conf vol						
vCu, unblocked vol	1195	361	722			
tC, single (s)	6.8	6.9	4.1			
tC, 2 stage (s)						
tF (s)	3.5	3.3	2.2			
p0 queue free %	74	94	99			
cM capacity (veh/h)	180	641	889			

Direction, Lane #	EB 1	NB 1	NB 2	SB 1	SB 2
Volume Total	84	316	609	472	250
Volume Left	46	12	0	0	0
Volume Right	38	0	0	0	14
cSH	266	889	1700	1700	1700
Volume to Capacity	0.32	0.01	0.36	0.28	0.15
Queue Length 95th (ft)	33	1	0	0	0
Control Delay (s)	24.7	0.5	0.0	0.0	0.0
Lane LOS	C	A			
Approach Delay (s)	24.7	0.2		0.0	
Approach LOS	C				

Intersection Summary			
Average Delay	1.3		
Intersection Capacity Utilization	43.1%	ICU Level of Service	A
Analysis Period (min)	15		

Movement	EBL	EBT	EBR	WBL	WBT	WBR	NBL	NBT	NBR	SBL	SBT	SBR
Lane Configurations												
Ideal Flow (vphpl)	1800	1900	1900	1800	1900	1900	1800	1900	1900	1800	1900	1900
Total Lost time (s)	4.0	4.0		4.0	4.0		4.0	4.0		4.0	4.0	
Lane Util. Factor	1.00	*1.00		1.00	*1.00		1.00	*1.00		1.00	*1.00	
Frt	1.00	1.00		1.00	1.00		1.00	1.00		1.00	1.00	
Flt Protected	1.00	1.00		1.00	1.00		1.00	1.00		1.00	1.00	
Satd. Flow (prot)	1800	3800		1800	3800		1800	3800		1800	3800	
Flt Permitted	1.00	1.00		1.00	1.00		1.00	1.00		1.00	1.00	
Satd. Flow (perm)	1800	3800		1800	3800		1800	3800		1800	3800	
Volume (vph)	32	421	25	50	487	52	51	542	132	50	291	42
Peak-hour factor, PHF	0.95	0.95	0.95	0.95	0.95	0.95	0.95	0.95	0.95	0.95	0.95	0.95
Adj. Flow (vph)	34	443	26	53	513	55	54	571	139	53	306	44
RTOR Reduction (vph)	0	6	0	0	12	0	0	31	0	0	16	0
Lane Group Flow (vph)	34	463	0	53	556	0	54	679	0	53	334	0
Turn Type	Perm			Perm			Perm			Perm		
Protected Phases		4			8			2			6	
Permitted Phases	4			8			2			6		
Actuated Green, G (s)	33.0	33.0		33.0	33.0		34.0	34.0		34.0	34.0	
Effective Green, g (s)	33.0	33.0		33.0	33.0		34.0	34.0		34.0	34.0	
Actuated g/C Ratio	0.44	0.44		0.44	0.44		0.45	0.45		0.45	0.45	
Clearance Time (s)	4.0	4.0		4.0	4.0		4.0	4.0		4.0	4.0	
Lane Grp Cap (vph)	792	1672		792	1672		816	1723		816	1723	
v/s Ratio Prot		0.12			c0.15			c0.18			0.09	
v/s Ratio Perm	0.02			0.03			0.03			0.03		
v/c Ratio	0.04	0.28		0.07	0.33		0.07	0.39		0.06	0.19	
Uniform Delay, d1	12.0	13.4		12.1	13.8		11.6	13.6		11.5	12.3	
Progression Factor	0.40	0.40		1.00	1.00		1.00	1.00		1.00	1.00	
Incremental Delay, d2	0.1	0.2		0.2	0.5		0.2	0.7		0.2	0.3	
Delay (s)	4.8	5.6		12.3	14.3		11.7	14.3		11.7	12.5	
Level of Service	A	A		B	B		B	B		B	B	
Approach Delay (s)		5.5			14.1			14.1			12.4	
Approach LOS		A			B			B			B	

Intersection Summary			
HCM Average Control Delay	11.9	HCM Level of Service	B
HCM Volume to Capacity ratio	0.36		
Actuated Cycle Length (s)	75.0	Sum of lost time (s)	8.0
Intersection Capacity Utilization	54.3%	ICU Level of Service	A
Analysis Period (min)	15		

c Critical Lane Group

Movement	EBL	EBT	EBR	WBL	WBT	WBR	NBL	NBT	NBR	SBL	SBT	SBR
Lane Configurations												
Ideal Flow (vphpl)	1800	1900	1900	1800	1900	1900	1800	1900	1900	1800	1900	1900
Total Lost time (s)	4.0	4.0	4.0	4.0	4.0		4.0	4.0		4.0	4.0	4.0
Lane Util. Factor	1.00	*1.00	1.00	1.00	*1.00		1.00	*1.00		1.00	*1.00	1.00
Frt	1.00	1.00	1.00	1.00	1.00		1.00	1.00		1.00	1.00	1.00
Flt Protected	1.00	1.00	1.00	1.00	1.00		1.00	1.00		1.00	1.00	1.00
Satd. Flow (prot)	1800	3800	1900	1800	3800		1800	3800		1800	3800	1900
Flt Permitted	1.00	1.00	1.00	1.00	1.00		1.00	1.00		1.00	1.00	1.00
Satd. Flow (perm)	1800	3800	1900	1800	3800		1800	3800		1800	3800	1900
Volume (vph)	271	709	348	23	1274	49	437	534	15	15	148	244
Peak-hour factor, PHF	0.95	0.95	0.95	0.95	0.95	0.95	0.95	0.95	0.95	0.95	0.95	0.95
Adj. Flow (vph)	285	746	366	24	1341	52	460	562	16	16	156	257
RTOR Reduction (vph)	0	0	187	0	3	0	0	2	0	0	0	208
Lane Group Flow (vph)	285	746	179	24	1390	0	460	576	0	16	156	49
Turn Type	Prot		Perm	Prot			pm+pt			pm+pt		Perm
Protected Phases	7	4		3	8		5	2		1	6	
Permitted Phases			4				2			6		6
Actuated Green, G (s)	16.0	44.0	44.0	6.0	34.0		25.0	18.0		23.0	17.0	17.0
Effective Green, g (s)	16.0	44.0	44.0	6.0	34.0		25.0	18.0		23.0	17.0	17.0
Actuated g/C Ratio	0.18	0.49	0.49	0.07	0.38		0.28	0.20		0.26	0.19	0.19
Clearance Time (s)	4.0	4.0	4.0	4.0	4.0		4.0	4.0		4.0	4.0	4.0
Lane Grp Cap (vph)	320	1858	929	120	1436		500	760		460	718	359
v/s Ratio Prot	c0.16	0.20		0.01	c0.37		c0.07	0.15		0.00	0.04	
v/s Ratio Perm			0.09				0.18			0.01		0.03
v/c Ratio	0.89	0.40	0.19	0.20	0.97		0.92	0.76		0.03	0.22	0.14
Uniform Delay, d1	36.1	14.6	13.0	39.7	27.5		31.9	33.9		25.6	30.9	30.4
Progression Factor	1.00	1.00	1.00	1.00	1.00		1.00	1.00		1.00	1.00	1.00
Incremental Delay, d2	28.9	0.6	0.5	3.7	17.2		24.6	7.0		0.1	0.7	0.8
Delay (s)	65.0	15.3	13.4	43.4	44.7		56.5	40.9		25.7	31.6	31.2
Level of Service	E	B	B	D	D		E	D		C	C	C
Approach Delay (s)		24.9			44.7			47.8			31.1	
Approach LOS		C			D			D			C	

Intersection Summary			
HCM Average Control Delay	37.6	HCM Level of Service	D
HCM Volume to Capacity ratio	0.90		
Actuated Cycle Length (s)	90.0	Sum of lost time (s)	12.0
Intersection Capacity Utilization	95.6%	ICU Level of Service	F
Analysis Period (min)	15		

c Critical Lane Group

Movement	EBL	EBT	EBR	WBL	WBT	WBR	NBL	NBT	NBR	SBL	SBT	SBR
Lane Configurations												
Ideal Flow (vphpl)	1800	1900	1900	1800	1900	1900	1900	1900	1900	1800	1900	1900
Total Lost time (s)	4.0	4.0	4.0	4.0	4.0			4.0		4.0	4.0	
Lane Util. Factor	1.00	1.00	1.00	1.00	1.00			1.00		1.00	1.00	
Frt	1.00	1.00	1.00	1.00	1.00			1.00		1.00	1.00	
Flt Protected	1.00	1.00	1.00	1.00	1.00			1.00		1.00	1.00	
Satd. Flow (prot)	1800	1900	1900	1800	1900			1900		1800	1900	
Flt Permitted	1.00	1.00	1.00	1.00	1.00			1.00		1.00	1.00	
Satd. Flow (perm)	1800	1900	1900	1800	1900			1900		1800	1900	
Volume (vph)	43	420	44	25	665	49	59	0	77	36	0	88
Peak-hour factor, PHF	0.95	0.95	0.95	0.95	0.95	0.95	0.95	0.95	0.95	0.95	0.95	0.95
Adj. Flow (vph)	45	442	46	26	700	52	62	0	81	38	0	93
RTOR Reduction (vph)	0	0	17	0	4	0	0	59	0	0	68	0
Lane Group Flow (vph)	45	442	29	26	748	0	0	84	0	38	25	0
Turn Type	Perm		Perm	Perm			Perm			Perm		
Protected Phases		4			8			2			6	
Permitted Phases	4		4	8			2			6		
Actuated Green, G (s)	47.0	47.0	47.0	47.0	47.0			20.0		20.0	20.0	
Effective Green, g (s)	47.0	47.0	47.0	47.0	47.0			20.0		20.0	20.0	
Actuated g/C Ratio	0.63	0.63	0.63	0.63	0.63			0.27		0.27	0.27	
Clearance Time (s)	4.0	4.0	4.0	4.0	4.0			4.0		4.0	4.0	
Lane Grp Cap (vph)	1128	1191	1191	1128	1191			507		480	507	
v/s Ratio Prot		0.23			c0.39						0.01	
v/s Ratio Perm	0.03		0.02	0.01				0.04		0.02		
v/c Ratio	0.04	0.37	0.02	0.02	0.63			0.16		0.08	0.05	
Uniform Delay, d1	5.4	6.8	5.3	5.3	8.6			21.1		20.6	20.4	
Progression Factor	0.70	0.75	0.69	0.22	0.87			1.00		1.00	1.00	
Incremental Delay, d2	0.1	0.9	0.0	0.0	1.6			0.7		0.3	0.2	
Delay (s)	3.8	5.9	3.7	1.2	9.1			21.8		20.9	20.6	
Level of Service	A	A	A	A	A			C		C	C	
Approach Delay (s)		5.6			8.8			21.8			20.7	
Approach LOS		A			A			C			C	

Intersection Summary			
HCM Average Control Delay	9.9	HCM Level of Service	A
HCM Volume to Capacity ratio	0.49		
Actuated Cycle Length (s)	75.0	Sum of lost time (s)	8.0
Intersection Capacity Utilization	59.3%	ICU Level of Service	B
Analysis Period (min)	15		

c Critical Lane Group

Movement	EBL	EBT	EBR	WBL	WBT	WBR	NBL	NBT	NBR	SBL	SBT	SBR
Lane Configurations												
Ideal Flow (vphpl)	1800	1900	1900	1800	1900	1900	1800	1900	1900	1800	1900	1900
Total Lost time (s)	4.0	4.0		4.0	4.0		4.0	4.0		4.0	4.0	
Lane Util. Factor	1.00	*1.00		1.00	*1.00		1.00	1.00		1.00	1.00	
Frt	1.00	1.00		1.00	1.00		1.00	1.00		1.00	1.00	
Flt Protected	1.00	1.00		1.00	1.00		1.00	1.00		1.00	1.00	
Satd. Flow (prot)	1800	3800		1800	3800		1800	1900		1800	1900	
Flt Permitted	1.00	1.00		1.00	1.00		1.00	1.00		1.00	1.00	
Satd. Flow (perm)	1800	3800		1800	3800		1800	1900		1800	1900	
Volume (vph)	57	565	76	96	933	60	140	477	96	68	347	75
Peak-hour factor, PHF	0.95	0.95	0.95	0.95	0.95	0.95	0.95	0.95	0.95	0.95	0.95	0.95
Adj. Flow (vph)	60	595	80	101	982	63	147	502	101	72	365	79
RTOR Reduction (vph)	0	15	0	0	6	0	0	10	0	0	10	0
Lane Group Flow (vph)	60	660	0	101	1039	0	147	593	0	72	434	0
Turn Type	Perm			Perm			Perm			Perm		
Protected Phases		4			8			2			6	
Permitted Phases	4			8			2			6		
Actuated Green, G (s)	31.0	31.0		31.0	31.0		36.0	36.0		36.0	36.0	
Effective Green, g (s)	31.0	31.0		31.0	31.0		36.0	36.0		36.0	36.0	
Actuated g/C Ratio	0.41	0.41		0.41	0.41		0.48	0.48		0.48	0.48	
Clearance Time (s)	4.0	4.0		4.0	4.0		4.0	4.0		4.0	4.0	
Lane Grp Cap (vph)	744	1571		744	1571		864	912		864	912	
v/s Ratio Prot		0.17			c0.27			c0.31			0.23	
v/s Ratio Perm	0.03			0.06			0.08			0.04		
v/c Ratio	0.08	0.42		0.14	0.66		0.17	0.65		0.08	0.48	
Uniform Delay, d1	13.4	15.6		13.7	17.8		11.0	14.7		10.6	13.1	
Progression Factor	1.00	1.00		1.00	1.00		0.78	0.64		1.00	1.00	
Incremental Delay, d2	0.2	0.8		0.4	2.2		0.3	2.6		0.2	1.8	
Delay (s)	13.6	16.4		14.1	20.0		8.9	12.0		10.8	14.9	
Level of Service	B	B		B	B		A	B		B	B	
Approach Delay (s)		16.2			19.4			11.4			14.3	
Approach LOS		B			B			B			B	

Intersection Summary			
HCM Average Control Delay	15.9	HCM Level of Service	B
HCM Volume to Capacity ratio	0.66		
Actuated Cycle Length (s)	75.0	Sum of lost time (s)	8.0
Intersection Capacity Utilization	79.3%	ICU Level of Service	D
Analysis Period (min)	15		

c Critical Lane Group

Movement	EBL	EBT	EBR	WBL	WBT	WBR	NBL	NBT	NBR	SBL	SBT	SBR
Lane Configurations												
Ideal Flow (vphpl)	1800	1900	1900	1800	1900	1900	1800	1900	1900	1800	1900	1900
Total Lost time (s)	4.0	4.0		4.0	4.0		4.0	4.0		4.0	4.0	
Lane Util. Factor	1.00	*1.00		1.00	*1.00		1.00	1.00		1.00	1.00	
Frt	1.00	1.00		1.00	1.00		1.00	1.00		1.00	1.00	
Flt Protected	1.00	1.00		1.00	1.00		1.00	1.00		1.00	1.00	
Satd. Flow (prot)	1800	3800		1800	3800		1800	1900		1800	1900	
Flt Permitted	1.00	1.00		1.00	1.00		1.00	1.00		1.00	1.00	
Satd. Flow (perm)	1800	3800		1800	3800		1800	1900		1800	1900	
Volume (vph)	19	84	65	34	169	57	57	643	82	10	504	51
Peak-hour factor, PHF	0.95	0.95	0.95	0.95	0.95	0.95	0.95	0.95	0.95	0.95	0.95	0.95
Adj. Flow (vph)	20	88	68	36	178	60	60	677	86	11	531	54
RTOR Reduction (vph)	0	53	0	0	47	0	0	6	0	0	5	0
Lane Group Flow (vph)	20	103	0	36	191	0	60	757	0	11	580	0
Turn Type	pm+pt			pm+pt			pm+pt			Perm		
Protected Phases	7	4		3	8		5	2			6	
Permitted Phases	4			8			2			6		
Actuated Green, G (s)	22.0	16.0		22.0	16.0		41.0	41.0		31.0	31.0	
Effective Green, g (s)	22.0	16.0		22.0	16.0		41.0	41.0		31.0	31.0	
Actuated g/C Ratio	0.29	0.21		0.29	0.21		0.55	0.55		0.41	0.41	
Clearance Time (s)	4.0	4.0		4.0	4.0		4.0	4.0		4.0	4.0	
Lane Grp Cap (vph)	624	811		624	811		984	1039		744	785	
v/s Ratio Prot	0.00	0.03		c0.00	c0.05		0.00	c0.40			0.31	
v/s Ratio Perm	0.01			0.02			0.03			0.01		
v/c Ratio	0.03	0.13		0.06	0.24		0.06	0.73		0.01	0.74	
Uniform Delay, d1	18.9	23.8		19.1	24.4		11.0	12.8		13.0	18.6	
Progression Factor	1.00	1.00		1.00	1.00		1.07	0.78		0.89	0.76	
Incremental Delay, d2	0.1	0.3		0.2	0.7		0.1	2.6		0.0	5.8	
Delay (s)	19.0	24.2		19.3	25.1		11.8	12.6		11.6	20.0	
Level of Service	B	C		B	C		B	B		B	C	
Approach Delay (s)		23.6			24.3			12.6			19.9	
Approach LOS		C			C			B			B	

Intersection Summary			
HCM Average Control Delay	17.7	HCM Level of Service	B
HCM Volume to Capacity ratio	0.54		
Actuated Cycle Length (s)	75.0	Sum of lost time (s)	12.0
Intersection Capacity Utilization	65.3%	ICU Level of Service	C
Analysis Period (min)	15		

c Critical Lane Group

Movement	EBL	EBT	EBR	EBR2	WBL2	WBL	WBT	WBR	NBL2	NBL	NBT	NBR
Lane Configurations												
Ideal Flow (vphpl)	1800	1900	1900	1900	1700	1700	1900	1900	1800	1800	1900	1900
Total Lost time (s)	4.0	4.0	4.0			4.0	4.0			4.0	4.0	4.0
Lane Util. Factor	1.00	*1.00	*1.00			*1.00	*1.00			*1.00	*1.00	1.00
Frt	1.00	1.00	1.00			1.00	1.00			1.00	1.00	1.00
Flt Protected	1.00	1.00	1.00			1.00	1.00			1.00	1.00	1.00
Satd. Flow (prot)	1800	3800	1900			3400	3800			1800	3800	1900
Flt Permitted	1.00	1.00	1.00			1.00	1.00			1.00	1.00	1.00
Satd. Flow (perm)	1800	3800	1900			3400	3800			1800	3800	1900
Volume (vph)	154	466	114	8	112	355	633	51	53	216	731	147
Peak-hour factor, PHF	0.95	0.95	0.95	0.95	0.95	0.95	0.95	0.95	0.95	0.95	0.95	0.95
Adj. Flow (vph)	162	491	120	8	118	374	666	54	56	227	769	155
RTOR Reduction (vph)	0	0	2	0	0	0	7	0	0	0	0	110
Lane Group Flow (vph)	162	491	126	0	0	492	713	0	0	166	886	45
Turn Type	Prot		Perm		Prot	Prot			Prot	Prot		Perm
Protected Phases	5	2			1	1	6		3	3	8	
Permitted Phases			2									8
Actuated Green, G (s)	9.0	18.0	18.0			14.0	23.0			9.0	35.0	26.0
Effective Green, g (s)	9.0	18.0	18.0			14.0	23.0			9.0	35.0	26.0
Actuated g/C Ratio	0.10	0.20	0.20			0.16	0.26			0.10	0.39	0.29
Clearance Time (s)	4.0	4.0	4.0			4.0	4.0			4.0	4.0	4.0
Lane Grp Cap (vph)	180	760	380			529	971			180	1478	549
v/s Ratio Prot	0.09	0.13				c0.14	c0.19			c0.09	c0.06	
v/s Ratio Perm			0.07								0.17	0.02
v/c Ratio	0.90	0.65	0.33			0.93	0.73			0.92	0.60	0.08
Uniform Delay, d1	40.1	33.1	30.8			37.5	30.7			40.2	21.9	23.3
Progression Factor	1.00	1.00	1.00			1.00	1.00			1.00	1.00	1.00
Incremental Delay, d2	45.0	4.2	2.3			25.1	4.9			49.3	1.8	0.3
Delay (s)	85.1	37.3	33.2			62.7	35.6			89.4	23.7	23.6
Level of Service	F	D	C			E	D			F	C	C
Approach Delay (s)		46.5					46.6				32.7	
Approach LOS		D					D				C	

Intersection Summary			
HCM Average Control Delay	45.6	HCM Level of Service	D
HCM Volume to Capacity ratio	0.90		
Actuated Cycle Length (s)	90.0	Sum of lost time (s)	20.0
Intersection Capacity Utilization	100.9%	ICU Level of Service	G
Analysis Period (min)	15		

c Critical Lane Group

Movement	SBL	SBT	SBR	SBR2	NEL2	NEL	NER	NER2
Lane Configurations								
Ideal Flow (vphpl)	1800	1900	1900	1900	1700	1700	1800	1800
Total Lost time (s)	4.0	4.0	4.0			4.0	4.0	
Lane Util. Factor	1.00	*1.00	*1.00			*1.00	*1.00	
Frt	1.00	1.00	1.00			1.00	1.00	
Flt Protected	1.00	1.00	1.00			1.00	1.00	
Satd. Flow (prot)	1800	1900	1900			3400	3600	
Flt Permitted	1.00	1.00	1.00			1.00	1.00	
Satd. Flow (perm)	1800	1900	1900			3400	3600	
Volume (vph)	67	432	130	96	15	145	179	45
Peak-hour factor, PHF	0.95	0.95	0.95	0.95	0.95	0.95	0.95	0.95
Adj. Flow (vph)	71	455	137	101	16	153	188	47
RTOR Reduction (vph)	0	0	30	0	0	0	26	0
Lane Group Flow (vph)	71	455	208	0	0	169	209	0
Turn Type	Prot		Perm		Split		Perm	
Protected Phases	7	4			9	9		
Permitted Phases			4				9	
Actuated Green, G (s)	6.0	23.0	23.0			6.0	6.0	
Effective Green, g (s)	6.0	23.0	23.0			6.0	6.0	
Actuated g/C Ratio	0.07	0.26	0.26			0.07	0.07	
Clearance Time (s)	4.0	4.0	4.0			4.0	4.0	
Lane Grp Cap (vph)	120	486	486			227	240	
v/s Ratio Prot	0.04	c0.24				0.05		
v/s Ratio Perm			0.11				c0.06	
v/c Ratio	0.59	0.94	0.43			0.74	0.87	
Uniform Delay, d1	40.8	32.8	28.0			41.2	41.6	
Progression Factor	1.00	1.00	1.00			1.00	1.00	
Incremental Delay, d2	19.6	27.7	2.7			19.7	32.4	
Delay (s)	60.4	60.5	30.8			61.0	74.0	
Level of Service	E	E	C			E	E	
Approach Delay (s)		51.2				68.5		
Approach LOS		D				E		

Intersection Summary

FORECAST YEAR (2035) WITH PROJECT CONDITIONS

WITH RECOMMENDED MITIGATION MEASURES

AM PEAK HOUR

Year 2035 Build With Mitigations - AM Peak Hour
City of San Bernardino
Downtown San Bernardino Passenger Rail Project (With 3rd St Closure)

Level Of Service Computation Report
2000 HCM Operations Method (Base Volume Alternative)

Intersection #5 J St and 2nd St

Cycle (sec):	60	Critical Vol./Cap.(X):	0.601
Loss Time (sec):	4 (Y+R=4.0 sec)	Average Delay (sec/veh):	6.6
Optimal Cycle:	26	Level Of Service:	A

Street Name:	J St						2nd St					
Approach:	North Bound			South Bound			East Bound			West Bound		
Movement:	L - T - R			L - T - R			L - T - R			L - T - R		
Control:	Permitted			Permitted			Permitted			Permitted		
Rights:	Include			Include			Include			Include		
Min. Green:	0	0	0	0	0	0	0	0	0	0	0	0
Lanes:	0 0	1! 0	0	0 1	0 0	0	1 0	1 1	0	1 0	1 1	0
Volume Module:												
Base Vol:	20	1	195	40	3	0	9	807	43	216	475	40
Growth Adj:	1.00	1.00	1.00	1.00	1.00	1.00	1.00	1.00	1.00	1.00	1.00	1.00
Initial Bse:	20	1	195	40	3	0	9	807	43	216	475	40
User Adj:	1.00	1.00	1.00	1.00	1.00	1.00	1.00	1.00	1.00	1.00	1.00	1.00
PHF Adj:	0.95	0.95	0.95	0.95	0.95	0.95	0.95	0.95	0.95	0.95	0.95	0.95
PHF Volume:	21	1	205	42	3	0	9	849	45	227	500	42
Reduct Vol:	0	0	0	0	0	0	0	0	0	0	0	0
Reduced Vol:	21	1	205	42	3	0	9	849	45	227	500	42
PCE Adj:	1.00	1.00	1.00	1.00	1.00	1.00	1.00	1.00	1.00	1.00	1.00	1.00
MLF Adj:	1.00	1.00	1.00	1.00	1.00	1.00	1.00	1.00	1.00	1.00	1.00	1.00
FinalVolume:	21	1	205	42	3	0	9	849	45	227	500	42
Saturation Flow Module:												
Sat/Lane:	1900	1900	1900	1900	1900	1900	1900	1900	1900	1900	1900	1900
Adjustment:	0.86	0.86	0.86	0.68	0.68	1.00	0.43	0.94	0.94	0.28	0.94	0.94
Lanes:	0.09	0.01	0.90	0.93	0.07	0.00	1.00	1.90	0.10	1.00	1.84	0.16
Final Sat.:	151	8	1469	1207	91	0	820	3400	181	540	3290	277
Capacity Analysis Module:												
Vol/Sat:	0.14	0.14	0.14	0.03	0.03	0.00	0.01	0.25	0.25	0.42	0.15	0.15
Crit Moves:		****								****		
Green/Cycle:	0.23	0.23	0.23	0.23	0.23	0.00	0.70	0.70	0.70	0.70	0.70	0.70
Volume/Cap:	0.60	0.60	0.60	0.15	0.15	0.00	0.02	0.36	0.36	0.60	0.22	0.22
Delay/Veh:	23.2	23.2	23.2	18.5	18.5	0.0	2.7	3.7	3.7	7.3	3.2	3.2
User DelAdj:	1.00	1.00	1.00	1.00	1.00	1.00	1.00	1.00	1.00	1.00	1.00	1.00
AdjDel/Veh:	23.2	23.2	23.2	18.5	18.5	0.0	2.7	3.7	3.7	7.3	3.2	3.2
LOS by Move:	C	C	C	B	B	A	A	A	A	A	A	A
HCM2kAvgQ:	5	5	5	1	1	0	0	4	4	3	2	2

Note: Queue reported is the number of cars per lane.

Year 2035 Build With Mitigations - AM Peak Hour
City of San Bernardino
Downtown San Bernardino Passenger Rail Project (With 3rd St Closure)

Level Of Service Computation Report
2000 HCM 4-Way Stop Method (Base Volume Alternative)

Intersection #6 J St and Rialto Ave

Cycle (sec):	100	Critical Vol./Cap.(X):	0.776
Loss Time (sec):	0 (Y+R=4.0 sec)	Average Delay (sec/veh):	22.7
Optimal Cycle:	0	Level Of Service:	C

Street Name:	J St						Rialto Ave					
Approach:	North Bound			South Bound			East Bound			West Bound		
Movement:	L - T - R			L - T - R			L - T - R			L - T - R		
Control:	Stop Sign			Stop Sign			Stop Sign			Stop Sign		
Rights:	Include			Include			Include			Include		
Min. Green:	0	0	0	0	0	0	0	0	0	0	0	0
Lanes:	0 0	1! 0	0	0 0	1! 0	0	0 1	0 1	0	0 1	0 1	0
Volume Module:												
Base Vol:	30	43	38	139	67	12	95	593	17	87	389	60
Growth Adj:	1.00	1.00	1.00	1.00	1.00	1.00	1.00	1.00	1.00	1.00	1.00	1.00
Initial Bse:	30	43	38	139	67	12	95	593	17	87	389	60
User Adj:	1.00	1.00	1.00	1.00	1.00	1.00	1.00	1.00	1.00	1.00	1.00	1.00
PHF Adj:	0.88	0.88	0.88	0.88	0.88	0.88	0.88	0.88	0.88	0.88	0.88	0.88
PHF Volume:	34	49	43	158	76	14	108	674	19	99	442	68
Reduct Vol:	0	0	0	0	0	0	0	0	0	0	0	0
Reduced Vol:	34	49	43	158	76	14	108	674	19	99	442	68
PCE Adj:	1.00	1.00	1.00	1.00	1.00	1.00	1.00	1.00	1.00	1.00	1.00	1.00
MLF Adj:	1.00	1.00	1.00	1.00	1.00	1.00	1.00	1.00	1.00	1.00	1.00	1.00
FinalVolume:	34	49	43	158	76	14	108	674	19	99	442	68
Saturation Flow Module:												
Adjustment:	1.00	1.00	1.00	1.00	1.00	1.00	1.00	1.00	1.00	1.00	1.00	1.00
Lanes:	0.27	0.39	0.34	0.64	0.31	0.05	0.27	1.68	0.05	0.32	1.46	0.22
Final Sat.:	122	175	154	307	148	27	139	880	25	160	733	115
Capacity Analysis Module:												
Vol/Sat:	0.28	0.28	0.28	0.51	0.51	0.51	0.78	0.77	0.76	0.62	0.60	0.59
Crit Moves:	****				****		****			****		
Delay/Veh:	13.1	13.1	13.1	17.1	17.1	17.1	29.4	28.2	27.3	20.5	19.5	18.7
Delay Adj:	1.00	1.00	1.00	1.00	1.00	1.00	1.00	1.00	1.00	1.00	1.00	1.00
AdjDel/Veh:	13.1	13.1	13.1	17.1	17.1	17.1	29.4	28.2	27.3	20.5	19.5	18.7
LOS by Move:	B	B	B	C	C	C	D	D	D	C	C	C
ApproachDel:	13.1			17.1			28.4			19.6		
Delay Adj:	1.00			1.00			1.00			1.00		
ApprAdjDel:	13.1			17.1			28.4			19.6		
LOS by Appr:	B			C			D			C		
AllWayAvgQ:	0.3	0.3	0.3	0.9	0.9	0.9	2.8	2.6	2.6	1.4	1.3	1.3

Note: Queue reported is the number of cars per lane.

FORECAST YEAR (2035) WITH PROJECT CONDITIONS

WITH RECOMMENDED MITIGATION MEASURES

PM PEAK HOUR

Year 2035 Build With Mitigations - PM Peak Hour
City of San Bernardino
Downtown San Bernardino Passenger Rail Project (With 3rd St Closure)

Level Of Service Computation Report
2000 HCM Operations Method (Base Volume Alternative)

Intersection #5 J St and 2nd St

Cycle (sec):	60	Critical Vol./Cap.(X):	0.872
Loss Time (sec):	4 (Y+R=4.0 sec)	Average Delay (sec/veh):	12.4
Optimal Cycle:	62	Level Of Service:	B

Street Name:	J St							2nd St					
Approach:	North Bound			South Bound			East Bound			West Bound			
Movement:	L	- T	- R	L	- T	- R	L	- T	- R	L	- T	- R	
Control:	Permitted			Permitted			Permitted			Permitted			
Rights:	Include			Include			Include			Include			
Min. Green:	0	0	0	0	0	0	0	0	0	0	0	0	
Lanes:	0 0	1! 0	0	0 0	1! 0	0	1 0	1 1	0	1 0	1 1	0	
Volume Module:													
Base Vol:	21	1	265	100	8	5	2	1096	39	223	736	57	
Growth Adj:	1.00	1.00	1.00	1.00	1.00	1.00	1.00	1.00	1.00	1.00	1.00	1.00	
Initial Bse:	21	1	265	100	8	5	2	1096	39	223	736	57	
User Adj:	1.00	1.00	1.00	1.00	1.00	1.00	1.00	1.00	1.00	1.00	1.00	1.00	
PHF Adj:	0.95	0.95	0.95	0.95	0.95	0.95	0.95	0.95	0.95	0.95	0.95	0.95	
PHF Volume:	22	1	279	105	8	5	2	1154	41	235	775	60	
Reduct Vol:	0	0	0	0	0	0	0	0	0	0	0	0	
Reduced Vol:	22	1	279	105	8	5	2	1154	41	235	775	60	
PCE Adj:	1.00	1.00	1.00	1.00	1.00	1.00	1.00	1.00	1.00	1.00	1.00	1.00	
MLF Adj:	1.00	1.00	1.00	1.00	1.00	1.00	1.00	1.00	1.00	1.00	1.00	1.00	
FinalVolume:	22	1	279	105	8	5	2	1154	41	235	775	60	
Saturation Flow Module:													
Sat/Lane:	1900	1900	1900	1900	1900	1900	1900	1900	1900	1900	1900	1900	
Adjustment:	0.85	0.85	0.85	0.36	0.36	0.36	0.31	0.95	0.95	0.20	0.94	0.94	
Lanes:	0.07	0.01	0.92	0.89	0.07	0.04	1.00	1.93	0.07	1.00	1.86	0.14	
Final Sat.:	119	6	1497	610	49	31	583	3469	123	374	3314	257	
Capacity Analysis Module:													
Vol/Sat:	0.19	0.19	0.19	0.17	0.17	0.17	0.00	0.33	0.33	0.63	0.23	0.23	
Crit Moves:		****								****			
Green/Cycle:	0.21	0.21	0.21	0.21	0.21	0.21	0.72	0.72	0.72	0.72	0.72	0.72	
Volume/Cap:	0.87	0.87	0.87	0.81	0.81	0.81	0.01	0.46	0.46	0.87	0.32	0.32	
Delay/Veh:	43.4	43.4	43.4	49.3	49.3	49.3	2.4	3.7	3.7	31.5	3.2	3.2	
User DelAdj:	1.00	1.00	1.00	1.00	1.00	1.00	1.00	1.00	1.00	1.00	1.00	1.00	
AdjDel/Veh:	43.4	43.4	43.4	49.3	49.3	49.3	2.4	3.7	3.7	31.5	3.2	3.2	
LOS by Move:	D	D	D	D	D	D	A	A	A	C	A	A	
HCM2kAvgQ:	9	9	9	4	4	4	0	5	5	7	3	3	

Note: Queue reported is the number of cars per lane.

Year 2035 Build With Mitigations - PM Peak Hour
City of San Bernardino
Downtown San Bernardino Passenger Rail Project (With 3rd St Closure)

Level Of Service Computation Report
2000 HCM 4-Way Stop Method (Base Volume Alternative)

Intersection #6 J St and Rialto Ave

Cycle (sec):	100	Critical Vol./Cap.(X):	0.926
Loss Time (sec):	0 (Y+R=4.0 sec)	Average Delay (sec/veh):	33.0
Optimal Cycle:	0	Level Of Service:	D

Street Name:	J St						Rialto Ave					
Approach:	North Bound			South Bound			East Bound			West Bound		
Movement:	L	T	R	L	T	R	L	T	R	L	T	R
Control:	Stop Sign			Stop Sign			Stop Sign			Stop Sign		
Rights:	Include			Include			Include			Include		
Min. Green:	0	0	0	0	0	0	0	0	0	0	0	0
Lanes:	0 0	1!	0 0	0 0	1!	0 0	0 1	0 1	0	0 1	0 1	0
Volume Module:												
Base Vol:	29	117	63	142	62	22	84	474	9	113	710	60
Growth Adj:	1.00	1.00	1.00	1.00	1.00	1.00	1.00	1.00	1.00	1.00	1.00	1.00
Initial Bse:	29	117	63	142	62	22	84	474	9	113	710	60
User Adj:	1.00	1.00	1.00	1.00	1.00	1.00	1.00	1.00	1.00	1.00	1.00	1.00
PHF Adj:	0.97	0.97	0.97	0.97	0.97	0.97	0.97	0.97	0.97	0.97	0.97	0.97
PHF Volume:	30	121	65	146	64	23	87	489	9	116	732	62
Reduct Vol:	0	0	0	0	0	0	0	0	0	0	0	0
Reduced Vol:	30	121	65	146	64	23	87	489	9	116	732	62
PCE Adj:	1.00	1.00	1.00	1.00	1.00	1.00	1.00	1.00	1.00	1.00	1.00	1.00
MLF Adj:	1.00	1.00	1.00	1.00	1.00	1.00	1.00	1.00	1.00	1.00	1.00	1.00
FinalVolume:	30	121	65	146	64	23	87	489	9	116	732	62
Saturation Flow Module:												
Adjustment:	1.00	1.00	1.00	1.00	1.00	1.00	1.00	1.00	1.00	1.00	1.00	1.00
Lanes:	0.14	0.56	0.30	0.63	0.27	0.10	0.30	1.67	0.03	0.26	1.61	0.13
Final Sat.:	64	256	138	285	124	44	137	785	15	126	804	69
Capacity Analysis Module:												
Vol/Sat:	0.47	0.47	0.47	0.51	0.51	0.51	0.63	0.62	0.62	0.93	0.91	0.90
Crit Moves:		****		****			****			****		
Delay/Veh:	16.7	16.7	16.7	18.1	18.1	18.1	22.3	21.7	21.2	50.8	47.6	44.8
Delay Adj:	1.00	1.00	1.00	1.00	1.00	1.00	1.00	1.00	1.00	1.00	1.00	1.00
AdjDel/Veh:	16.7	16.7	16.7	18.1	18.1	18.1	22.3	21.7	21.2	50.8	47.6	44.8
LOS by Move:	C	C	C	C	C	C	C	C	C	F	E	E
ApproachDel:		16.7			18.1			21.8			47.8	
Delay Adj:		1.00			1.00			1.00			1.00	
ApprAdjDel:		16.7			18.1			21.8			47.8	
LOS by Appr:		C			C			C			E	
AllWayAvgQ:	0.8	0.8	0.8	0.9	0.9	0.9	1.5	1.5	1.5	5.6	4.9	4.9

Note: Queue reported is the number of cars per lane.

OPENING YEAR (2014) WITH PROJECT CONDITIONS

WITH RECOMMENDED MITIGATION MEASURES

AM PEAK HOUR

Year 2014 Build With Mitigations - AM Peak Hour
City of San Bernardino
Downtown San Bernardino Passenger Rail Project (With 3rd St Closure)

Level Of Service Computation Report
2000 HCM 4-Way Stop Method (Base Volume Alternative)

Intersection #6 J St and Rialto Ave

Cycle (sec):	100	Critical Vol./Cap.(X):	0.609
Loss Time (sec):	0 (Y+R=4.0 sec)	Average Delay (sec/veh):	15.6
Optimal Cycle:	0	Level Of Service:	C

Street Name:	J St						Rialto Ave					
Approach:	North Bound			South Bound			East Bound			West Bound		
Movement:	L -	T -	R	L -	T -	R	L -	T -	R	L -	T -	R
Control:	Stop Sign			Stop Sign			Stop Sign			Stop Sign		
Rights:	Include			Include			Include			Include		
Min. Green:	0	0	0	0	0	0	0	0	0	0	0	0
Lanes:	0 0	1! 0	0	0 0	1! 0	0	0 1	0 1	0	0 1	0 1	0
Volume Module:												
Base Vol:	8	40	36	131	65	13	112	473	7	74	291	19
Growth Adj:	1.00	1.00	1.00	1.00	1.00	1.00	1.00	1.00	1.00	1.00	1.00	1.00
Initial Bse:	8	40	36	131	65	13	112	473	7	74	291	19
User Adj:	1.00	1.00	1.00	1.00	1.00	1.00	1.00	1.00	1.00	1.00	1.00	1.00
PHF Adj:	0.88	0.88	0.88	0.88	0.88	0.88	0.88	0.88	0.88	0.88	0.88	0.88
PHF Volume:	9	45	41	149	74	15	127	538	8	84	331	22
Reduct Vol:	0	0	0	0	0	0	0	0	0	0	0	0
Reduced Vol:	9	45	41	149	74	15	127	538	8	84	331	22
PCE Adj:	1.00	1.00	1.00	1.00	1.00	1.00	1.00	1.00	1.00	1.00	1.00	1.00
MLF Adj:	1.00	1.00	1.00	1.00	1.00	1.00	1.00	1.00	1.00	1.00	1.00	1.00
FinalVolume:	9	45	41	149	74	15	127	538	8	84	331	22
Saturation Flow Module:												
Adjustment:	1.00	1.00	1.00	1.00	1.00	1.00	1.00	1.00	1.00	1.00	1.00	1.00
Lanes:	0.09	0.48	0.43	0.63	0.31	0.06	0.38	1.60	0.02	0.38	1.52	0.10
Final Sat.:	46	232	209	326	162	32	209	900	13	201	807	53
Capacity Analysis Module:												
Vol/Sat:	0.20	0.20	0.20	0.46	0.46	0.46	0.61	0.60	0.59	0.42	0.41	0.40
Crit Moves:	****				****		****			****		
Delay/Veh:	11.2	11.2	11.2	14.6	14.6	14.6	18.3	17.6	17.2	14.0	13.5	13.3
Delay Adj:	1.00	1.00	1.00	1.00	1.00	1.00	1.00	1.00	1.00	1.00	1.00	1.00
AdjDel/Veh:	11.2	11.2	11.2	14.6	14.6	14.6	18.3	17.6	17.2	14.0	13.5	13.3
LOS by Move:	B	B	B	B	B	B	C	C	C	B	B	B
ApproachDel:	11.2			14.6			17.8			13.6		
Delay Adj:	1.00			1.00			1.00			1.00		
ApprAdjDel:	11.2			14.6			17.8			13.6		
LOS by Appr:	B			B			C			B		
AllWayAvgQ:	0.2	0.2	0.2	0.7	0.7	0.7	1.4	1.3	1.3	0.7	0.6	0.6

Note: Queue reported is the number of cars per lane.

OPENING YEAR (2014) WITH PROJECT CONDITIONS

WITH RECOMMENDED MITIGATION MEASURES

PM PEAK HOUR

Year 2014 Build With Mitigations - PM Peak Hour
City of San Bernardino
Downtown San Bernardino Passenger Rail Project (With 3rd St Closure)

Level Of Service Computation Report
2000 HCM 4-Way Stop Method (Base Volume Alternative)

Intersection #6 J St and Rialto Ave

Cycle (sec):	100	Critical Vol./Cap.(X):	0.655
Loss Time (sec):	0 (Y+R=4.0 sec)	Average Delay (sec/veh):	16.2
Optimal Cycle:	0	Level Of Service:	C

Street Name:	J St						Rialto Ave					
Approach:	North Bound			South Bound			East Bound			West Bound		
Movement:	L - T - R			L - T - R			L - T - R			L - T - R		
Control:	Stop Sign			Stop Sign			Stop Sign			Stop Sign		
Rights:	Include			Include			Include			Include		
Min. Green:	0	0	0	0	0	0	0	0	0	0	0	0
Lanes:	0 0	1! 0	0	0 0	1! 0	0	0 1	0 1	0	0 1	0 1	0
Volume Module:												
Base Vol:	19	81	48	68	51	22	59	375	10	91	611	20
Growth Adj:	1.00	1.00	1.00	1.00	1.00	1.00	1.00	1.00	1.00	1.00	1.00	1.00
Initial Bse:	19	81	48	68	51	22	59	375	10	91	611	20
User Adj:	1.00	1.00	1.00	1.00	1.00	1.00	1.00	1.00	1.00	1.00	1.00	1.00
PHF Adj:	0.97	0.97	0.97	0.97	0.97	0.97	0.97	0.97	0.97	0.97	0.97	0.97
PHF Volume:	20	84	49	70	53	23	61	387	10	94	630	21
Reduct Vol:	0	0	0	0	0	0	0	0	0	0	0	0
Reduced Vol:	20	84	49	70	53	23	61	387	10	94	630	21
PCE Adj:	1.00	1.00	1.00	1.00	1.00	1.00	1.00	1.00	1.00	1.00	1.00	1.00
MLF Adj:	1.00	1.00	1.00	1.00	1.00	1.00	1.00	1.00	1.00	1.00	1.00	1.00
FinalVolume:	20	84	49	70	53	23	61	387	10	94	630	21
Saturation Flow Module:												
Adjustment:	1.00	1.00	1.00	1.00	1.00	1.00	1.00	1.00	1.00	1.00	1.00	1.00
Lanes:	0.13	0.55	0.32	0.48	0.36	0.16	0.27	1.69	0.04	0.25	1.69	0.06
Final Sat.:	66	279	165	239	180	77	141	907	24	143	976	32
Capacity Analysis Module:												
Vol/Sat:	0.30	0.30	0.30	0.29	0.29	0.29	0.43	0.43	0.42	0.65	0.65	0.64
Crit Moves:			****		****		****			****		
Delay/Veh:	12.2	12.2	12.2	12.3	12.3	12.3	14.0	13.8	13.6	19.8	19.1	18.6
Delay Adj:	1.00	1.00	1.00	1.00	1.00	1.00	1.00	1.00	1.00	1.00	1.00	1.00
AdjDel/Veh:	12.2	12.2	12.2	12.3	12.3	12.3	14.0	13.8	13.6	19.8	19.1	18.6
LOS by Move:	B	B	B	B	B	B	B	B	B	C	C	C
ApproachDel:	12.2			12.3			13.8			19.2		
Delay Adj:	1.00			1.00			1.00			1.00		
ApprAdjDel:	12.2			12.3			13.8			19.2		
LOS by Appr:	B			B			B			C		
AllWayAvgQ:	0.4	0.4	0.4	0.4	0.4	0.4	0.7	0.7	0.7	1.7	1.6	1.6

Note: Queue reported is the number of cars per lane.