08-SBd-10, PM 25.3/27.3
I-10/Tippecanoe Avenue Interchange Improvements
08-250-448100
Project ID 0800000710
Program 010.680 / 400.146
January 2011

PROJECT REPORT

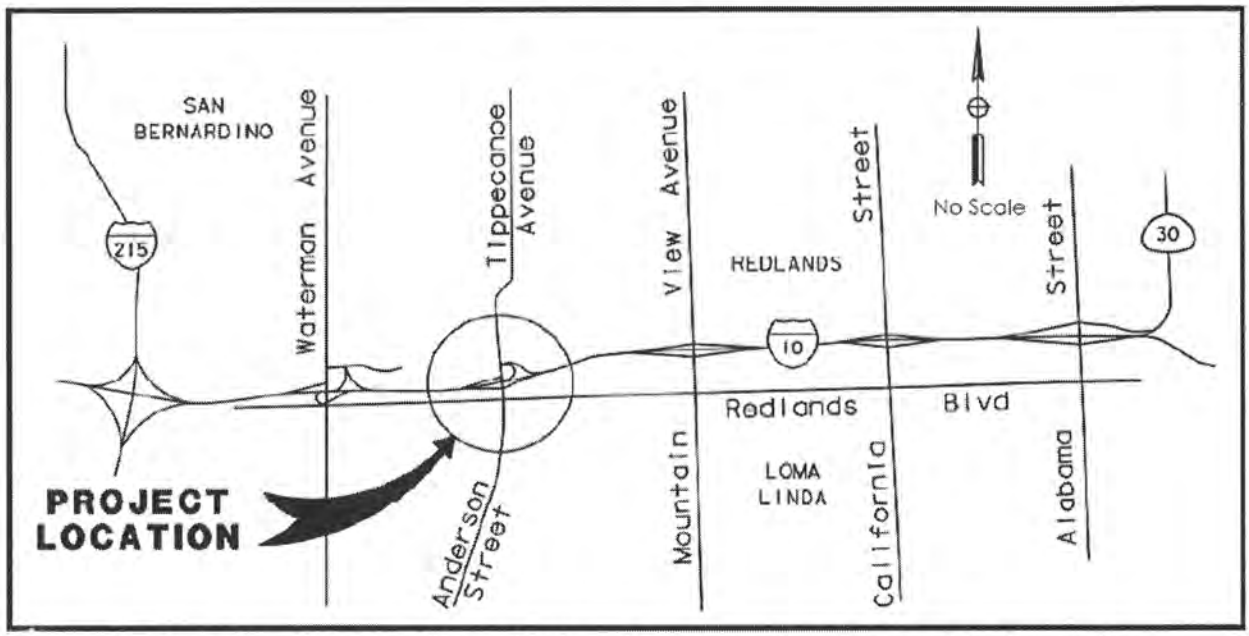

On Route 10 in the Cities of Loma Linda and San Bernardino, County of San Bernardino
From 1.01 miles west of Tippecanoe Avenue to 1.02 miles east of Tippecanoe Avenue

I have reviewed the right of way information contained in this Project Report and the R/W Data Sheet attached hereto, and have found the data to be complete, current, and accurate:

Basem Muallem
DEPUTY DISTRICT DIRECTOR, RIGHT OF WAY

APPROVAL RECOMMENDED:

Meandey Tim
PROJECT MANAGER

APPROVAL RECOMMENDED:

David Bricker
DEPUTY DISTRICT DIRECTOR, ENVIRONMENTAL PLANNING

APPROVAL RECOMMENDED:

GAM

Christy Connors
DEPUTY DISTRICT DIRECTOR, DESIGN

APPROVED:

Raymond W. Wolfe, PhD
DISTRICT DIRECTOR

1/27/11
DATE

This Project Report has been prepared under the direction of the following registered civil engineer. The registered civil engineer attests to the technical information contained herein and the engineering data upon which recommendations, conclusions, and decisions are based.

MICHAEL C. HAN
REGISTERED CIVIL ENGINEER

1/17/11
DATE

REGISTERED PROFESSIONAL ENGINEER
Michael C. Han
No. 61893
Exp. 9/30/11
CIVIL
STATE OF CALIFORNIA

CONCURRENCE:

JON BUMPS
OFFICE CHIEF, DESIGN OVERSIGHT

1/20/11
DATE

Table of Contents

1 INTRODUCTION 1
2 RECOMMENDATION 1
3 BACKGROUND 2
3.1 Project History 2
3.2 Community Interaction 2
3.3 Existing Facility 2
4 NEED AND PURPOSE 4
4.1 Problem, Deficiencies, Justification 4
4.2 Regional & System Planning 4
4.3 Traffic Volumes and Operational Analysis 6
4.4 Accident Analysis 17
5 ALTERNATIVES 18
5.1 Viable Alternatives 18
5.2 Rejected Alternatives 27
6 CONSIDERATIONS REQUIRING DISCUSSION 32
6.1 Hazardous Waste 32
6.2 Value Analysis 34
6.3 Resource Conservation 34
6.4 Right-of-Way Issues 34
6.5 Environmental Issues 35
6.6 Air Quality Conformity 36
6.7 Title VI Considerations 36
6.8 Noise Abatement Decision Report 37
7 OTHER CONSIDERATIONS AS APPROPRIATE 39
7.1 Public Hearing Process 39
7.2 Route Matters 39
7.3 Permits 39
7.4 Cooperative Agreements 40
7.5 Other Agreements 40
7.6 Involvement with a Navigable Waterway 40
7.7 Transportation Management Plan 40
7.8 Stage Construction 40
7.9 Accommodation of Oversize Loads 41
7.10 Graffiti Control 41
7.11 Drainage 41
7.12 Federal Involvement 42
7.13 Life Cycle Cost Analysis for Pavements 42
8 PROGRAMMING 42
8.1 Programming 42
8.2 Funding 43
8.3 Schedule 43
9 REVIEWS 44
10 PROJECT KEY PERSONNEL 45
11 ATTACHMENTS 46

List of Tables

Table 1: Existing Year 2009 Mainline and Ramp Volumes 6
Table 2: Year 2015 Mainline and Ramp Volumes – No Build 7
Table 3: Year 2015 Mainline and Ramp Volumes – Alternative 1 8
Table 4: Year 2035 Mainline and Ramp Volumes – No Build 9
Table 5: Year 2035 Mainline and Ramp Volumes – Alternative 1 9
Table 6: Intersection Levels of Service – No Build 10
Table 7: Intersection Levels of Service – Alternative 1 11
Table 8: Queue Lengths (95th Percentile) – No Build 12
Table 9: Queue Lengths (95th Percentile) – Alternative 1 14
Table 10: TASAS-TSN Accident Rates 17
Table 11: Summary of Feasible Sound Barriers from Noise Study Report 37
Table 12: Summary of Abatement Key Information 38
Table 13: Recommended Sound Barriers 38
Table 14: Project Funding 43
Table 15: Project Milestones 43

List of Attachments

Attachment A – Project Location Map
Attachment B – Category Determination Request Letter
Attachment C – Approved PSR (Cover)
Attachment D – Geometric Drawings
Attachment E – Advance Planning Study (APS)
Attachment F – Right-of-Way Data Sheet
Attachment G – Existing Utility Plans
Attachment H – Landscaping Concepts
Attachment I – Storm Water Data Report (Cover)
Attachment J – Project Cost Estimate
Attachment K – Rejected Alternatives
Attachment L – Environmental Document (Cover and Title Sheet)
Attachment M – Transportation Management Plan Data Sheet
Attachment N – Stage Construction Index Sheets
Attachment O – Life Cycle Cost Analysis Forms

1 INTRODUCTION

San Bernardino Associated Governments (SANBAG), in cooperation with the California Department of Transportation (Caltrans), the City of Loma Linda, and the City of San Bernardino, is proposing to reconstruct the Interstate 10 (I-10)/Tippecanoe Avenue interchange. This Project Report (PR) is prepared to address the needs of the interchange improvements. The project objectives are to reduce congestion at the ramp intersections, thereby providing adequate access to facilities served by the interchange, including the regional hospital, airport, residences and business facilities; and to improve merge/diverge operations and reduce the weave between the Waterman Avenue eastbound on-ramp and the Tippecanoe Avenue eastbound off-ramp. The project limits extend from the Anderson Street/Court Street intersection at the south to the Tippecanoe Avenue/Hospitality Lane-Coulston Street intersection at the north. The project limits on I-10 extend from 1,390 feet east of Waterman Avenue to 2,170 feet east of Tippecanoe Avenue. In addition, Redlands Boulevard would be improved approximately 450 feet west and 800 feet east of Anderson Street. A Project Location Map is included in Attachment A. The project has been assigned as Project Development Processing Category 3 because it is a modification of an existing interchange and local access, and requires revisions to the existing freeway agreements for the cities of Loma Linda and San Bernardino. A signed Category Determination Letter is included as Attachment B. The cost for the preferred alternative, Alternative 1, is estimated at approximately $76,878,000, which includes $32,482,000 for construction, $33,442,000 for right of way acquisition and utility relocation, and $10,954,000 for Plans, Specifications, and Estimate (PS&E), Right-of-Way, and Construction Management support costs. The program codes are 010.680 and 400.146 since the project will be funded by Federal funds and local measure matching funds, respectively. The project is scheduled to begin construction in fiscal year 2012/13.

Several Build Alternatives have been studied over the past nine years, and only Alternative 1 was found to be viable. The No Build Alternative is also being evaluated. The preferred alternative, Alternative 1, includes the following improvements:

- Widen the existing I-10/Tippecanoe Avenue Undercrossing (Bridge No. 54-0598) on the north side to accommodate the new westbound (WB) loop on-ramp.
- Add an eastbound (EB) auxiliary lane on I-10 from the Waterman Avenue EB on-ramp to the Tippecanoe Avenue EB off-ramp.
- Widen the existing I-10 bridge over San Timoteo Creek (Bridge No. 54-0599) to accommodate the EB auxiliary lane, and structurally retrofit the existing bridge supports.
- Add a WB loop on-ramp and reconfigure the WB off-ramp.
- Widen Tippecanoe Avenue/Anderson Street and Redlands Boulevard.
- Modify traffic signals at intersections along Tippecanoe Avenue/Anderson Street.
- Add a residential road connecting East Coulston Street, East Lee Street, and East Laurelwood Drive.
- Eliminate the South Ferree Street connection to East Rosewood Drive by providing a cul-de-sac at East Laurelwood Drive and South Ferree Street.

2 RECOMMENDATION

This PR recommends that the project be approved using the preferred alternative, Alternative 1, and that the project proceed to the final design phase. The cities of Loma Linda and San Bernardino have been consulted with respect to the preferred alternative, their views have been considered, and the local agencies are in general accord with the proposed project. After completion of the

public circulation of the Draft Environmental Document (DED) and consideration of all public review comments, the Project Development Team selected Alternative 1 as the preferred alternative on December 1, 2009. The preferred alternative was selected because it will meet the project purpose and need by improving operational deficiencies, increasing capacity at the interchange, and improving access to local businesses, residences, and major facilities served by the interchange. The preferred alternative will also accommodate future widening on I-10 for HOV lanes in both directions.

3 BACKGROUND

3.1 Project History

A Project Study Report (Project Development Support) [PSR (PDS)] was initiated by SANBAG to mitigate existing and projected capacity and operational deficiencies at the I-10/Tippecanoe Avenue interchange and adjacent local roads resulting from the increasing traffic demand generated by the accelerated growth and development in the cities of Loma Linda and San Bernardino. The PSR (PDS) recommended upgrading the I-10/Tippecanoe Avenue interchange with the addition of new ramps and widening of existing ramps. The PSR (PDS) also recommended adding through and turn lanes and increasing the distance between ramp intersections along Tippecanoe Avenue and Anderson Street to reduce congestion. A total of four alternatives were investigated during the PSR (PDS) phase, including the No Build alternative. After approval of the PSR (PDS) in August 2002, the Project Approval and Environmental Document (PA/ED) phase of project development was initiated by SANBAG in 2004. The approved PSR (PDS) cover sheet is included as Attachment C.

3.2 Community Interaction

A Project Development Team (PDT) was identified to ensure collaborative communication among the stakeholders which includes representatives from Caltrans, City of San Bernardino, City of Loma Linda, and Loma Linda University Medical Center. The representatives have actively participated in the engineering and environmental studies leading up to the development of this PR. On March 18, 2008, council members from the cities of San Bernardino and Loma Linda and the County of San Bernardino agreed with the proposed project geometrics.

A Notice of Intent to Adopt a Mitigated Negative Declaration and Availability of Initial Study/Environmental Assessment, Notice of Public Hearing was published on October 21, 2009. The Draft Initial Study/Environmental Assessment (IS/EA) was circulated for a 30-day public review period. The public hearing was held at Victoria Elementary School in the City of San Bernardino on November 5, 2009. Public comments received during the review period have been incorporated into the final environmental document (FED). Adjacent property owners have approached the cities and SANBAG and have had discussions with them regarding the proposed project and its impacts to potential access and right of way. There has been no contact from special interest groups. The needs of pedestrians, bicyclists, and physically-challenged individuals have been considered and accommodated during development of the proposed geometrics.

3.3 Existing Facility

I-10 serves as a major east-west freeway that originates at the junction with State Routes 1 and 2 in the city of Santa Monica in Los Angeles County and extends easterly through the Los Angeles metropolitan area and terminates at the east coast in the state of Florida. East of the junction with State Route 60, I-10 has been identified in the 1998 Interregional Transportation Strategic Plan as a

High Emphasis Route included in the Arizona Gateway Route. I-10 is also included in the State Freeway and Expressway System with the Federal Functional classifications of Rural Principal Arterial and extension of a Rural Principal Arterial into an urban area. I-10 is designated in the National Highway System, Department of Defense Rural Interstates and Single Routing in Urban Areas, and the Strategic Highway Corridor Network.

I-10 is a major corridor for interstate and interregional movement of people and goods and is one of the major commuter routes between Los Angeles and the Inland Empire (San Bernardino and Riverside Counties). In addition, the I-10 corridor is the major link between the rural areas in eastern Riverside County to the urban centers in the western part of San Bernardino County. It also serves the recreational traffic from Los Angeles and western San Bernardino and Riverside Counties to the resorts in the Coachella Valley, the Salton Sea area, and recreational facilities along the Colorado River.

Through the cities of Loma Linda and San Bernardino, I-10 is an eight-lane facility with four mixed flow lanes in each direction separated by a median 35 feet in width with concrete barrier. An existing auxiliary lane is provided along WB I-10 between Tippecanoe Avenue and Waterman Avenue. The average daily traffic volume (ADT) through the project area based on 2007 Caltrans historic data is approximately 212,000 vehicles. The existing EB and WB exits at the Tippecanoe Avenue interchange are single-lane off-ramps that open up to two and three lanes, respectively, at their intersections with Tippecanoe Avenue / Anderson Street.

Tippecanoe Avenue is a major north-south four-lane roadway in the city of San Bernardino. Per the city of San Bernardino Roadway Functional Classification, Tippecanoe Avenue is classified as a major arterial. Tippecanoe Avenue turns into Anderson Street south of I-10. Within the project limits, there are four major intersections which are signalized: Redlands Boulevard, EB ramps, WB ramps, and Harriman Place-Laurelwood Drive. The existing I-10/Tippecanoe Avenue interchange is a compact diamond (Type L-1) interchange with single-lane entrance and exit ramps. The existing intersection spacings between the WB ramps, EB ramps, and Redlands Boulevard are approximately 330 feet and 200 feet, respectively.

Anderson Street is a major north-south four-lane roadway with a two-way center turn lane or left-turn pockets from the I-10 freeway to Barton Road in the city of Loma Linda. The city of Loma Linda has designated this route as a truck route. Per the city of Loma Linda's Roadway Functional Classification, Anderson Street is classified as a major arterial. The city of Loma Linda recently modified the raised median on Anderson Street between the EB ramps and Redlands Boulevard to provide two through lanes and a right-turn pocket on NB Anderson Street.

<u>Existing Structures</u>

There are two existing bridge structures within the project limits. The I-10/San Timoteo Creek structure (Bridge No. 54-0599), built in 1962 and widened in 1990, consists of two spans and is approximately 187 feet in length. The superstructure consists of a reinforced concrete box girder at the original bridge and cast-in-place/prestressed concrete box girder at the widened bridge supported on reinforced concrete cantilever abutments and pier wall. The I-10/Tippecanoe Avenue Undercrossing (Bridge No. 54-0598), built in 1962 and widened in 1990, consists of three spans and is approximately 162 feet in length. The superstructure consists of reinforced concrete box girder at the original bridge and cast-in-place/prestressed concrete box girder at the widened bridge supported on reinforced concrete end diaphragm abutments and pier walls. Closure walls are included at the end spans.

4 NEED AND PURPOSE

4.1 Problem, Deficiencies, Justification

The purpose of the I-10/Tippecanoe Avenue Interchange Improvement project is to improve operational deficiencies and increase capacity at the interchange due to rapidly increasing traffic demand generated by the substantial growth and development that has occurred, and will continue to occur, in the cities of Loma Linda and San Bernardino. It is also designed to provide adequate access to local businesses, residences, and major facilities served by the interchange (e.g., Loma Linda University Medical Center, Loma Linda University, the Jerry Pettis Veterans Administration Hospital, San Bernardino International Trade Center, and the San Bernardino International Airport).

The objectives of the project are to:

- Reduce congestion at the ramp intersections, thereby providing adequate access to facilities served by the interchange, including the regional hospital, airport, and residences and business facilities; and
- Improve merge/diverge operations and reduce the weave between the Waterman Avenue EB on-ramp and the Tippecanoe Avenue EB off-ramp.

The interchange currently consists of three closely spaced intersections. These intersections include the WB I-10 ramps/Tippecanoe Avenue intersection, the EB I-10 ramps/Tippecanoe Avenue intersection, and the Anderson Street/Redlands Boulevard intersection. Traffic queuing spillover at these closely spaced intersections results in deficient operations. Without improvements, they would operate at inadequate levels of service (LOS) in both the AM and PM peak hours in 2035: WB I-10 ramps/Tippecanoe Avenue (LOS E), EB I-10 ramps/Tippecanoe Avenue (LOS F), and Anderson Street/Redlands Boulevard (LOS F).

Ramp accident data indicates that the actual rate of accidents on the WB on-ramp at Tippecanoe Avenue exceeds the average rates for similar type facilities. The primary collision factor was failure to yield.

In the existing and 2035 conditions, the peak demand on I-10 in the vicinity of Tippecanoe Avenue is in the eastbound direction during the PM peak hour. Demand volumes are projected to increase 50 percent in 2035 when compared to the existing condition. Heavy weaving occurs between the eastbound on-ramp at Waterman Avenue and the eastbound off-ramp at Tippecanoe Avenue in both the AM and PM peak hours.

Unless improvements are implemented at the I-10/Tippecanoe Avenue interchange, traffic congestion is expected to worsen over time, resulting in increased commuter delays and frustration, higher travel costs, and increased air pollution. In addition, inadequate LOS at local intersections are expected to increase demand on adjacent interchanges and the local street network as motorists seek less congested alternate routes. The elevated levels of traffic congestion exacerbate emergency vehicle access problems to Loma Linda University Medical Center.

4.2 Regional & System Planning

4.2.1 Identify System

I-10 is designated in the National Highway System, Department of Defense Rural Interstates and

Single Routing in Urban Areas, and the Strategic Highway Corridor Network. I-10 is also included in the State Freeway and Expressway System with the Federal Functional classifications of Rural Principal Arterial and extension of a Rural Principal Arterial into an urban area. Through the cities of Loma Linda and San Bernardino, I-10 is an eight-lane facility with four mixed flow lanes in each direction with a divided median.

4.2.2 State Planning

The proposed project is consistent with the I-10 Route Concept Fact Sheet, dated March 2000. The I-10 Route Concept Fact Sheet shows I-10 as an ultimate 10-lane facility with four mixed flow lanes and one HOV lane in each direction. As part of the I-10/Tippecanoe Avenue interchange improvements, the proposed bridge widenings at San Timoteo Creek and Tippecanoe Avenue, the proposed retaining wall locations, and ramp alignments have been designed to accommodate the future HOV lanes.

4.2.3 Regional Planning

The I-10/Tippecanoe Avenue Interchange Improvements project is included in the Southern California Association of Governments (SCAG) adopted 2008 Regional Transportation Plan (RTP) and currently adopted 2011 Federal Transportation Improvement Program (FTIP) as *"I-10 Tippecanoe Reconfigure Interchange & Add Eastbound Off Ramp Auxiliary Ln From Waterman On-Ramp To Tippecanoe Off-Ramp, Widen Bridge (Non-capacity), & Local Rd Imp/Mod (HP1366)"*. This project is also identified in the SANBAG 2007 Congestion Management Plan.

The adopted RTP and FTIP include a High Occupancy Vehicle (HOV) project through the project area, which would add one HOV lane in each direction along I-10 from west of Haven Avenue (PM 8.16) to Ford Street (PM 33.13). This HOV project is currently in the PA/ED phase (EA 0C2500, RTP ID #4H01001, FTIP ID 0C2500) and is scheduled to be constructed by 2018. The proposed I-10/Tippecanoe Avenue interchange improvements are consistent with the improvements proposed by the HOV project.

4.2.4 Local Planning

This proposed interchange improvement is located within the cities of Loma Linda and San Bernardino in San Bernardino County. This project is consistent with the City of Loma Linda General Plan which shows Anderson Street as a four-lane roadway between I-10 and Barton Road, and Redlands Boulevard as a four-lane roadway through the city. The project is also consistent with the City of San Bernardino General Plan which shows Tippecanoe Avenue as a six-lane roadway north of I-10. Both cities have identified in their Circulation Plan that the I-10/Tippecanoe Avenue interchange will be improved and I-10 will be improved to an ultimate 10-lane facility with HOV lanes.

The City of Loma Linda Master Plan of Bikeways identifies Anderson Street south of Court Street as a Class II bicycle facility. The project proposes to extend Class II bicycle facilities along Tippecanoe Avenue/Anderson Street within the project limits with the exception of (1) the northbound direction of Anderson Street south of Redlands Boulevard, and (2) the segment of Anderson Street between the EB ramps and Redlands Boulevard. Consistent with the City of Loma Linda Circulation Plan, the proposed improvements facilitate pedestrian travel by providing ADA-compliant sidewalks, access ramps and crosswalks throughout the project limits

Over the past several years, the former Norton Air Force Base was converted into San Bernardino International Trade Center and the San Bernardino International Airport. The Inland Valley

Development Agency (IVDA) was established with the intent to redevelop the former Norton Air Force Base properties and an additional 14,000 acres (ac) within a 3 mile radius of the base, including the I-10/Tippecanoe Avenue interchange vicinity in the cities of San Bernardino and Loma Linda. The city of San Bernardino has approved the San Bernardino International Trade Center Specific Plan, which identifies redevelopment for this area. In addition, the City of San Bernardino General Plan identifies appropriate land uses (commercial and industrial) within that airport influence area. Finally, the city of San Bernardino has established the area around the interchange as a San Bernardino Enterprise Zone; this designation allows tax and other incentives for business development in order to redevelop economically depressed areas. Because the interchange provides access to regional educational, hospital, trade, and airport areas and is located in a regional redevelopment area, it is important that the interchange accommodate the transportation needs associated with existing and planned development.

4.2.5 Transit Operator Planning

Omnitrans is the major regional Public Transit Operator for San Bernardino County. The proposed project improvements accommodate bus facilities served by Omnitrans along routes that include Tippecanoe Avenue/Anderson Street. A meeting was held on June 18, 2009 to discuss design consistency with the project team for the E Street Corridor sbX Bus Rapid Transit Project, which will utilize Tippecanoe Avenue/Anderson Street as part of the sbX corridor.

4.3 Traffic Volumes and Operational Analysis

A Traffic Operation Analysis (March 2008) was performed by SANBAG to study the existing traffic conditions (Year 2004), forecast future traffic demand (Year 2035), and assess the impact on traffic conditions of the proposed improvements. A Supplemental Traffic Operations Analysis (August 2009) was prepared to analyze updated existing conditions in 2009 and opening year in 2015. Detailed methodologies and analysis results can be referenced in the traffic report and subsequent supplement.

4.3.1 Current and Forecasted Traffic

Table 1 shows the 2009 AM and PM peak hour traffic volumes for the freeway mainline between the adjacent interchanges and the ramp volumes of the I-10/Tippecanoe Avenue interchange. The traffic counts were recorded for passenger cars, 2-axle trucks, 3-axle trucks, and 4-axle trucks. The trucks were factored into Passenger Car Equivalents (PCEs) that convert traffic volumes to an equivalent number of passenger cars based on the type of truck. The conversion factors for 2-axle, 3-axle, and 4-axle trucks were 1.5, 2, and 3, respectively.

Table 1: Existing Year 2009 Mainline and Ramp Volumes

Location	AM Peak Hour (PCE per hour)	PM Peak Hour (PCE per hour)
Eastbound		
Waterman Avenue On-Ramp	345	369
Freeway from Waterman Avenue On-Ramp to Tippecanoe Avenue Off-Ramp	8,497	8,251
Tippecanoe Avenue Off-Ramp	1,073	870
Freeway from Tippecanoe Avenue Off-Ramp to Tippecanoe Avenue On-Ramp	7,424	7,381

Location	AM Peak Hour (PCE per hour)	PM Peak Hour (PCE per hour)
Tippecanoe Avenue On-Ramp	273	775
Freeway from Tippecanoe Avenue On-Ramp to Mountain View Avenue Off-Ramp	7,697	8,156
Westbound		
Freeway from Mountain View Avenue On-Ramp to Tippecanoe Avenue Off-Ramp	7,319	7,328
Tippecanoe Avenue Off-Ramp	1,005	739
Freeway from Tippecanoe Avenue Off-Ramp to Tippecanoe Avenue On-Ramp	6,314	6,589
Tippecanoe Avenue On-Ramp	689	1,080
Freeway from Tippecanoe Avenue On-Ramp to Waterman Avenue Off-Ramp	7,003	7,669
Waterman Avenue Off-Ramp	728	735

2009 freeway segment volumes were developed from linear interpolation between 2007 Caltrans Traffic Counts and 2035 traffic volumes
PCE = Passenger Car Equivalents

Tables 2 and 3 present the forecast volumes for the No Build and Alternative 1 conditions, respectively, in year 2015 (project opening year) based on the forecasts obtained from SCAG. Volumes for year 2015 were developed by interpolating between the 2009 and 2035 traffic volumes.

Table 2: Year 2015 Mainline and Ramp Volumes – No Build

Location	AM Peak Hour (PCE per hour)	PM Peak Hour (PCE per hour)
Eastbound		
Waterman Avenue On-Ramp	445	525
Freeway from Waterman Avenue On-Ramp to Tippecanoe Avenue Off-Ramp	9,026	9,591
Tippecanoe Avenue Off-Ramp	1,437	1,112
Freeway from Tippecanoe Avenue Off-Ramp to Tippecanoe Avenue On-Ramp	7,590	8,480
Tippecanoe Avenue On-Ramp	360	905
Freeway from Tippecanoe Avenue On-Ramp to Mountain View Avenue Off-Ramp	7,949	9,385
Westbound		
Freeway from Mountain View Avenue On-Ramp to Tippecanoe Avenue Off-Ramp	8,539	8,252
Tippecanoe Avenue Off-Ramp	1,108	821

Location	AM Peak Hour (PCE per hour)	PM Peak Hour (PCE per hour)
Freeway from Tippecanoe Avenue Off-Ramp to Tippecanoe Avenue On-Ramp	7,431	7,432
Tippecanoe Avenue On-Ramp	855	1,244
Freeway from Tippecanoe Avenue On-Ramp to Waterman Avenue Off-Ramp	8,286	8,676
Waterman Avenue Off-Ramp	836	865

2015 volumes were developed from linear interpolation between 2009 and 2035 traffic volumes
PCE = Passenger Car Equivalents

Table 3: Year 2015 Mainline and Ramp Volumes – Alternative 1

Location	AM Peak Hour (PCE per hour)	PM Peak Hour (PCE per hour)
Eastbound		
Waterman Avenue On-Ramp	445	525
Freeway from Waterman Avenue On-Ramp to Tippecanoe Avenue Off-Ramp	9,026	9,591
Tippecanoe Avenue Off-Ramp	1,437	1,112
Freeway from Tippecanoe Avenue Off-Ramp to Tippecanoe Avenue On-Ramp	7,590	8,480
Tippecanoe Avenue On-Ramp	360	905
Freeway from Tippecanoe Avenue On-Ramp to Mountain View Avenue Off-Ramp	7,949	9,385
Westbound		
Freeway from Mountain View Avenue On-Ramp to Tippecanoe Avenue Off-Ramp	8,539	8,252
Tippecanoe Avenue Off-Ramp	1,108	820
Freeway from Tippecanoe Avenue Off-Ramp to Tippecanoe Avenue Loop On-Ramp	7,431	7,432
Tippecanoe Avenue Loop On-Ramp	419	391
Freeway from Tippecanoe Avenue Loop On-Ramp to Tippecanoe Avenue On-Ramp	7,850	7,823
Tippecanoe Avenue On-Ramp	435	853
Freeway from Tippecanoe Avenue On-Ramp to Waterman Avenue Off-Ramp	8,285	8,676
Waterman Avenue Off-Ramp	836	865

2015 volumes were developed from linear interpolation between 2009 and 2035 traffic volumes
PCE = Passenger Car Equivalents

Tables 4 and 5 present the forecast volumes for the No Build and Alternative 1 conditions, respectively, in year 2035 based on the forecasts obtained from SCAG.

Table 4: Year 2035 Mainline and Ramp Volumes – No Build

Location	AM Peak Hour (PCE per hour)	PM Peak Hour (PCE per hour)
Eastbound		
Waterman Avenue On-Ramp	778	1046
Freeway from Waterman Avenue On-Ramp to Tippecanoe Avenue Off-Ramp	9,141	12,410
Tippecanoe Avenue Off-Ramp	2,650	1,917
Freeway from Tippecanoe Avenue Off-Ramp to Tippecanoe Avenue On-Ramp	6,491	10,493
Tippecanoe Avenue On-Ramp	648	1,340
Freeway from Tippecanoe Avenue On-Ramp to Mountain View Avenue Off-Ramp	7,139	11,833
Westbound		
Freeway from Mountain View Avenue On-Ramp to Tippecanoe Avenue Off-Ramp	10,952	9,682
Tippecanoe Avenue Off-Ramp	1,451	1,092
Freeway from Tippecanoe Avenue Off-Ramp to Tippecanoe Avenue On-Ramp	9,501	8,590
Tippecanoe Avenue On-Ramp	1,406	1,791
Freeway from Tippecanoe Avenue On-Ramp to Waterman Avenue Off-Ramp	10,907	10,381
Waterman Avenue Off-Ramp	1,194	1,296

PCE = Passenger Car Equivalents

Table 5: Year 2035 Mainline and Ramp Volumes – Alternative 1

Location	AM Peak Hour (PCE per hour)	PM Peak Hour (PCE per hour)
Eastbound		
Waterman Avenue On-Ramp	778	1046
Freeway from Waterman Avenue On-Ramp to Tippecanoe Avenue Off-Ramp	9,141	12,410
Tippecanoe Avenue Off-Ramp	2,650	1,917
Freeway from Tippecanoe Avenue Off-Ramp to Tippecanoe Avenue On-Ramp	6,491	10,493
Tippecanoe Avenue On-Ramp	648	1,340
Freeway from Tippecanoe Avenue On-Ramp to Mountain View Avenue Off-Ramp	7,139	11,833

Location	AM Peak Hour (PCE per hour)	PM Peak Hour (PCE per hour)
Westbound		
Freeway from Mountain View Avenue On-Ramp to Tippecanoe Avenue Off-Ramp	10,952	9,682
Tippecanoe Avenue Off-Ramp	1,451	1,092
Freeway from Tippecanoe Avenue Off-Ramp to Tippecanoe Avenue Loop On-Ramp	9,501	8,590
Tippecanoe Avenue Loop On-Ramp	769	722
Freeway from Tippecanoe Avenue Loop On-Ramp to Tippecanoe Avenue On-Ramp	10,270	9,312
Tippecanoe Avenue On-Ramp	637	1,069
Freeway from Tippecanoe Avenue On-Ramp to Waterman Avenue Off-Ramp	10,907	10,381
Waterman Avenue Off-Ramp	1,194	1,296

PCE = Passenger Car Equivalents

4.3.2 Intersection Level of Service Analysis

Table 6 shows the 2009, 2015, and 2035 volume-based LOS and average control delay in seconds per vehicle for the No Build condition resulting from Highway Capacity Manual (HCM) analyses at the intersections along Tippecanoe Avenue / Anderson Street and at the adjacent interchanges during the AM and PM peak hours.

Table 6: Intersection Levels of Service – No Build

Study Intersection	Existing (2009)				Opening Year (2015)				Future (2035)			
	AM		PM		AM		PM		AM		PM	
	Delay	LOS	Delay	LOS	Delay	LOS	Delay	LOS	Delay	LOS	Delay	LOS
1. Tippecanoe Ave / Hospitality Ln-Coulston St	37.8	D	37.1	D	33.2	C	38.2	D	36.9	D	45.7	D
2. Tippecanoe Ave/ Laurelwood Dr-Harriman Pl	12.2	B	24.3	C	24.6	C	36.9	D	28.5	C	33.3	C
3. Tippecanoe Ave / WB Ramps	19.9	B	24.6	C	31.6	C	21.0	C	65.0	E	106.5	F
4. Tippecanoe Ave / EB Ramps	21.7	C	21.1	C	40.4	D	60.4	F	361.8	F	517.1	F
5. Anderson St / Redlands Blvd	23.1	C	30.6	C	29.1	C	50.3	D	199.0	F	367.6	F
6. Waterman Ave EB Off-Ramp / Redlands Blvd	20.8	C	24.2	C	20.8	C	25.2	C	21.7	C	32.3	C
7. Waterman Ave / Hospitality Ln	23.0	C	36.3	D	24.2	C	37.6	D	29.3	C	50.8	D
8. Waterman Ave / I-215 On-Ramp	10.5	B	22.5	C	11.3	B	28.4	D	18.4	C	127.0	F
9. Waterman Ave / EB Ramps	244.9	F	25.7	D	219.1	F	60.2	F	281.8	F	†	F
10. Waterman Ave / Redlands Blvd	27.8	C	41.9	D	31.3	C	63.2	F	55.7	E	220.2	F
11. Carnegie Dr-Hospitality Ln / WB Ramps	14.7	B	14.8	B	14.9	B	15.5	B	16.3	B	20.4	C
12. Mountain View Ave / WB Ramps	24.9	C	20.5	C	29.8	C	25.1	C	206.9	F	160.4	F
13. Mountain View Ave / EB Ramps	20.8	C	18.1	B	26.2	C	20.6	B	166.3	F	132.1	F

† *Delay is greater than can be calculated by HCM methodologies.*

The Tippecanoe Avenue/EB ramps intersection would operate at an unacceptable level of service in 2015. Further, in 2035 both the EB ramps and WB ramps intersection and the Tippecanoe Avenue/ Redlands Boulevard intersection would operate at LOS E or F.

Table 7 shows the 2015 and 2035 volume-based LOS and average control delay in seconds per vehicle for the Alternative 1 condition.

Table 7: Intersection Levels of Service – Alternative 1

Study Intersection	Opening Year (2015)				Future (2035)			
	AM		PM		AM		PM	
	Delay	LOS	Delay	LOS	Delay	LOS	Delay	LOS
1. Tippecanoe Ave / Hospitality Ln-Coulston St	23.4	C	35.9	D	34.3	C	41.3	D
2. Tippecanoe Ave/ Harriman Pl- WB Off-Ramp	20.0	B	26.5	C	29.7	C	34.9	C
3. Tippecanoe Ave / WB On-Ramp	N/A*		N/A*		N/A*		N/A*	
4. Tippecanoe Ave / EB Ramps	14.6	B	18.4	B	33.8	D	34.0	C
5. Anderson St / Redlands Blvd	21.7	C	29.1	C	31.0	C	45.9	D
6. Waterman Ave EB Off-Ramp / Redlands Blvd	20.8	C	25.2	C	21.7	C	32.3	C
7. Waterman Ave / Hospitality Ln	24.2	C	37.6	D	29.3	C	50.8	D
8. Waterman Ave / I-215 On-Ramp	11.3	B	28.4	D	18.4	C	127.0	F
9. Waterman Ave / EB Ramps	219.1	F	60.2	F	281.8	F	†	F
10. Waterman Ave / Redlands Blvd	31.3	C	63.2	F	55.7	E	220.2	F
11. Carnegie Dr-Hospitality Ln / WB Ramps	14.9	B	15.5	B	16.3	B	20.4	C
12. Mountain View Ave / WB Ramps	29.8	C	25.1	C	206.9	F	160.4	F
13. Mountain View Ave / EB Ramps	26.2	C	20.6	B	166.3	F	132.1	F

** There are no conflicting movements and the location is no longer a controlled intersection*
† Delay is greater than can be calculated by HCM methodologies.

Although LOS calculations indicate that intersections along Tippecanoe Avenue/Anderson Street currently operate at satisfactory LOS, field observations indicated that they operate at LOS F in the PM peak hour. SANBAG's estimate of average queue delay for the Tippecanoe Avenue/EB ramps intersection is 90 seconds per vehicle in the PM peak hour (LOS F) based on queue counts conducted in June 2008. Inefficiencies caused by queue spillover at closely spaced intersections inhibit throughput at upstream locations and make volume-based calculation of the LOS appear to be better than what actually exists. Therefore, a queuing analysis was conducted as part of the Supplemental Traffic Operations Analysis to further analyze the 2009, 2015 No Build, and 2015 Alternative 1 conditions. The queuing analysis results are summarized in Table 8 and Table 9 for the No Build and Alternative 1 conditions, respectively. The results indicate that the available storage lengths proposed in Alternative 1 accommodate the 95th percentile queue lengths in 2015 at all intersections within the project limits of improvement.

Table 8: Queue Lengths (95th Percentile) – No Build

Study Intersection	Available Storage (feet per lane)	Existing (2009) (feet per lane)		Opening Year (2015) (feet per lane)	
		AM	PM	AM	PM
1. Tippecanoe Ave / Hospitality Ln-Coulston St					
Eastbound Left Turn	210	47	249	84	294
Eastbound Through	950	56	256	85	307
Eastbound Right Turn	590	30	80	52	155
Westbound Left Turn	100	81	92	89	156
Westbound Through	1240	60	66	104	110
Northbound Left Turn	250	188	153	228	196
Northbound Through	810	176	142	235	271
Southbound Left Turn	110	35	66	49	90
Southbound Through	670	110	307	191	391
2. Tippecanoe Ave / Laurelwood Dr-Harriman Pl					
Eastbound Left Turn	250	32	207	75	268
Eastbound Through	925	8	32	10	42
Eastbound Right Turn	200	15	101	28	163
Westbound Left Turn	100	31	32	42	43
Westbound Through	1225	10	21	13	26
Northbound Left Turn	200	43	283	144	403
Northbound Through	539	82	217	305	310
Southbound Left Turn	200	4	19	6	27
Southbound Through	810	106	237	191	397
3. Tippecanoe Ave / WB Ramps					
Westbound Left Turn	150	211	154	332	274
Westbound Right Turn	150	169	85	272	161
Northbound Left Turn	260	18	112	235	190
Northbound Through	341	185	172	186	3
Southbound Right Turn	520	228	320	196	185
Southbound Through	539	72	189	114	135
4. Tippecanoe Ave / EB Ramps					
Eastbound Left Turn	991	422	374	786	589
Eastbound Right Turn	991	367	254	704	611
Northbound Through	300	103	112	407	276
Southbound Left Turn	261	16	40	173	625
Southbound Through	341	256	40	248	91
5. Anderson St / Redlands Blvd					
Eastbound Left Turn	150	47	166	123	253
Eastbound Through	5190	116	283	165	420
Westbound Left Turn	300	81	142	168	222
Westbound Through	2560	145	217	167	394
Northbound Left Turn	150	188	69	35	61
Northbound Through	440	129	148	265	323
Southbound Left Turn	210	35	183	91	324
Southbound Through	300	333	301	246	353

Study Intersection	Available Storage (feet per lane)	Existing (2009) (feet per lane)		Opening Year (2015) (feet per lane)	
		AM	PM	AM	PM
6. Waterman Ave EB Off-Ramp / Redlands Blvd					
Eastbound Through	585	136	216	136	227
Westbound Left Turn	172	65	81	59	76
Westbound Through	755	92	148	91	149
Northbound Right Turn	220	0	0	0	0
Southbound Left Turn	305	323	325	330	342
Southbound Through	1009	211	339	351	359
Southbound Right Turn	100	95	198	242	172
7. Waterman Ave / Hospitality Ln					
Eastbound Left Turn	150	115	177	139	226
Eastbound Through	960	123	415	114	350
Eastbound Right Turn	170	62	277	89	353
Westbound Left Turn	220	114	217	119	208
Westbound Through	1074	190	219	198	207
Northbound Left Turn	188	124	133	154	171
Northbound Through	1009	252	235	267	339
Northbound Right Turn	290	24	88	23	97
Southbound Left Turn	130	90	236	108	237
Southbound Through	960	106	259	138	282
Southbound Right Turn	226	47	86	78	101
8. Waterman Ave / I-215 On-Ramp					
Northbound Left Turn	300	30	113	34	142
9. Waterman Avenue/I-10 EB Ramps					
Westbound Right Turn	700	1446	210	1272	369
10. Waterman Ave / Redlands Blvd					
Eastbound Left Turn	408	132	170	140	220
Eastbound Through	755	156	250	180	334
Westbound Left Turn	125	171	276	202	377
Westbound Through	5190	69	141	71	259
Northbound Left Turn	165	91	142	79	126
Northbound Through	465	315	426	365	496
Northbound Right Turn	85	65	59	71	68
Southbound Left Turn	175	128	289	117	307
Southbound Through	1009	171	289	177	301

Study Intersection	Available Storage (feet per lane)	Existing (2009) (feet per lane)		Opening Year (2015) (feet per lane)	
		AM	PM	AM	PM
11. Carnegie Dr-Hospitality Ln / WB Ramps					
Eastbound Left Turn	100	185	80	193	86
Eastbound Through	1074	129	192	96	214
Eastbound Right Turn	250	39	102	40	125
Westbound Left Turn	296	28	99	29	109
Westbound Through	530	50	111	30	123
Northbound Left Turn	600	147	122	162	150
Northbound Through	1530	98	52	44	61
Northbound Right Turn	203	15	19	16	21
Southbound Left Turn	122	12	34	14	39
Southbound Through	640	20	124	7	152
Southbound Right Turn	122	14	20	15	22
12. Mountain View Ave / WB Ramps					
Westbound Left Turn	1470	277	173	433	262
Westbound Right Turn	70	65	40	116	96
Northbound Left Turn	100	190	72	212	129
Northbound Through	240	171	64	208	128
Southbound Through	420	124	170	237	262
13. Mountain View Ave / EB Ramps					
Eastbound Left Turn	1620	116	117	144	127
Eastbound Right Turn	132	291	65	460	75
Northbound Through	410	237	243	308	353
Southbound Left Turn	100	82	78	138	108
Southbound Through	240	61	61	24	64

Table 9: Queue Lengths (95th Percentile) – Alternative 1

Study Intersection	Available Storage (feet per lane)	Opening Year (2015) (feet per lane)	
		AM	PM
1. Tippecanoe Ave / Hospitality Ln-Coulston St			
Eastbound Left Turn	210	76	266
Eastbound Through	950	77	276
Eastbound Right Turn	590	47	101
Westbound Left Turn	100	101	170
Westbound Through	1240	89	85
Northbound Left Turn	250	111	164
Northbound Through	810	118	157
Southbound Left Turn	110	50	98
Southbound Through	670	180	335

Study Intersection	Available Storage (feet per lane)	Opening Year (2015) (feet per lane)	
		AM	PM
2. Tippecanoe Ave / Harriman Pl-WB Ramps			
Eastbound Left Turn	260	71	251
Eastbound Right Turn	500	57	139
Westbound Left Turn	330	197	105
Westbound Through	1225	136	317
Westbound Right Turn	330	132	135
Northbound Left Turn	220	77	202
Northbound Through	539	120	19
Northbound Right Turn	500	42	3
Southbound Through	810	60	97
Southbound Right Turn	500	1	1
3. Tippecanoe Ave / EB Ramps			
Eastbound Left Turn	500	260	216
Eastbound Right Turn	500	176	142
Northbound Through	300	84	143
Northbound Right Turn	100	1	8
Southbound Left Turn	261	72	193
Southbound Through	550	175	77
4. Anderson St / Redlands Blvd			
Eastbound Left Turn	300	44	82
Eastbound Through	5190	90	248
Eastbound Right Turn	300	80	36
Westbound Left Turn	225	62	88
Westbound Through	2560	111	185
Westbound Right Turn	340	67	105
Northbound Left Turn	240	39	47
Northbound Through	440	182	213
Northbound Right Turn	400	22	27
Southbound Left Turn	220	118	164
Southbound Through	300	176	220
Southbound Right Turn	200	12	47
5. Waterman Ave EB Off-Ramp / Redlands Blvd			
Eastbound Through	585	136	227
Westbound Left Turn	172	59	76
Westbound Through	755	91	149
Northbound Right Turn	220	0	0
Southbound Left Turn	305	330	342
Southbound Through	1009	351	359
Southbound Right Turn	100	242	172

Study Intersection	Available Storage (feet per lane)	Opening Year (2015) (feet per lane)	
		AM	PM
6. Waterman Ave / Hospitality Ln			
Eastbound Left Turn	150	139	226
Eastbound Through	960	114	350
Eastbound Right Turn	170	89	353
Westbound Left Turn	220	119	208
Westbound Through	1074	198	207
Northbound Left Turn	188	154	171
Northbound Through	1009	267	339
Northbound Right Turn	290	23	97
Southbound Left Turn	130	108	237
Southbound Through	960	138	282
Southbound Right Turn	226	78	101
7. Waterman Ave / I-215 On-Ramp			
Northbound Left Turn	300	34	142
8. Waterman Ave / I-10 EB Ramps			
Westbound Right Turn	700	1272	369
9. Waterman Ave / Redlands Blvd			
Eastbound Left Turn	408	140	220
Eastbound Through	755	180	334
Westbound Left Turn	125	202	377
Westbound Through	5190	71	259
Northbound Left Turn	165	79	126
Northbound Through	465	365	496
Northbound Right Turn	85	71	68
Southbound Left Turn	175	192	307
Southbound Through	1009	177	301
10. Carnegie Dr-Hospitality Ln / WB Ramps			
Eastbound Left Turn	100	193	86
Eastbound Through	1074	96	214
Eastbound Right Turn	250	0	125
Westbound Left Turn	296	15	109
Westbound Through	530	30	123
Northbound Left Turn	600	81	160
Northbound Through	1530	44	61
Northbound Right Turn	203	0	21
Southbound Left Turn	122	3	39
Southbound Through	640	7	152
Southbound Right Turn	122	0	22

Study Intersection	Available Storage (feet per lane)	Opening Year (2015) (feet per lane)	
		AM	PM
11. Mountain View Ave / WB Ramps			
Westbound Left Turn	1470	433	262
Westbound Right Turn	70	116	96
Northbound Left Turn	100	212	129
Northbound Through	240	208	128
Southbound Through	420	237	262
12. Mountain View Ave / EB Ramps			
Eastbound Left Turn	1620	144	127
Eastbound Right Turn	132	460	75
Northbound Through	410	308	353
Southbound Left Turn	100	138	108
Southbound Through	240	24	64

4.4 Accident Analysis

Traffic Accident Surveillance and Analysis System (TASAS)-Transportation System Network (TSN) data were provided by Caltrans District 8, which includes accidents that occurred during the three-year period from July 1, 2005 to June 30, 2008 on I-10 from PM 24.8 to 27.5 and the Tippecanoe Avenue interchange ramps.

Table 10: TASAS-TSN Accident Rates

Location	**Actual**			**Average**		
	Fatal	**F+I**	**Total**	**Fatal**	**F+I**	**Total**
Eastbound						
Mainline (PM 24.8 to 27.5)	0.003	0.38	**1.13**	0.005	0.34	1.10
Tippecanoe Avenue EB Off-Ramp (PM 26.03)	0.000	0.23	1.10	0.005	0.61	1.50
Tippecanoe Avenue EB On-Ramp (PM 26.53)	0.000	0.17	0.69	0.002	0.32	0.80
Westbound						
Mainline (PM 24.8 to 27.5)	0.006	0.32	0.77	0.005	0.34	1.10
Tippecanoe Avenue WB On-Ramp (PM 26.02)	0.000	0.80	**1.86**	0.002	0.32	0.80
Tippecanoe Avenue WB Off-Ramp (PM 26.51)	0.000	0.21	1.23	0.005	0.61	1.50

F+I = Fatal+Injury
Accident rates for mainline expressed as: number of accidents/million vehicle miles
Accident rates for ramps expressed as: number of accidents/million vehicles

As shown in Table 10, the accident data indicates that accidents occurred at a lower rate than the statewide average for similar facilities on the EB ramps, WB off-ramp, and the WB mainline, while accidents occurred at a higher rate on the EB mainline and the WB on-ramp. In particular, the accident rate is more than twice the statewide average rate on the WB on-ramp. Analysis of the TASAS-TSN data for the WB on-ramp shows that most of the accidents were broadside collisions, and failure to yield was the primary collision factor for most accidents. The majority of accidents on the WB on-ramp occurred near the ramp terminus, where the SB and northbound (NB) Tippecanoe Avenue turning movements onto the on-ramp may conflict. It is anticipated that the project would reduce the accident rate on the existing WB on-ramp since a new WB loop on-ramp would be constructed for NB Tippecanoe Avenue vehicles, which would eliminate the conflict at the existing WB on-ramp. It is also anticipated that the proposed project would reduce the accident rate on the EB mainline as a result of the proposed addition of an EB auxiliary lane between Waterman Avenue and Tippecanoe Avenue.

5 ALTERNATIVES

5.1 Viable Alternatives

5.1.1 No Build Alternative

The "No Build" Alternative proposes to maintain the existing configuration. This alternative would not accommodate the anticipated growth in the area or alleviate traffic congestion. The interchange is currently operating at an unacceptable LOS and traffic congestion would continue to worsen through the design year 2035.

5.1.2 Alternative 1 – Preferred Alternative

The preferred alternative, Alternative 1, proposes to modify the existing tight diamond configuration to a partial cloverleaf interchange for the north half of the interchange. Alternative 1 includes the following improvements:

- Add an EB auxiliary lane on I-10 from the Waterman Avenue EB on-ramp to the Tippecanoe Avenue EB off-ramp.
- Widen the existing I-10 bridge structure over San Timoteo Creek to accommodate the EB auxiliary lane. This would require retrofits to the bridge abutments and extension of the pier wall within San Timoteo Creek.
- Widen the Tippecanoe Avenue EB off-ramp by providing an additional left-turn lane and right-turn lane at the ramp intersection.
- Reconfigure the WB off-ramp from a tight diamond to a partial cloverleaf configuration, increasing the intersection spacing over 400 feet. The ramp intersection would align with the existing Harriman Place/Tippecanoe Avenue intersection.
- Add a Tippecanoe Avenue WB loop on-ramp. Addition of this ramp would allow for the removal of the existing left-turn lane for traffic heading northbound on Tippecanoe Avenue to access WB I-10. This would provide the room needed to add double left-turn lanes for southbound traffic on Tippecanoe Avenue onto the EB on-ramp and eastbound Redlands Boulevard.
- Widen the existing I-10 bridge structure over Tippecanoe Avenue in the WB direction to accommodate the WB loop on-ramp.
- Widen Tippecanoe Avenue from I-10 to just north of East Lee Street to provide lane taper length.

- Widen Anderson Street from I-10 to south of Court Street to accommodate additional turn lanes at the Anderson Street/EB ramps intersection and Anderson Street/Redlands Boulevard intersection.
- Widen Redlands Boulevard to accommodate a six-lane facility with dual left-turn lanes, striped medians, and sidewalks between approximately 450 feet west and 800 feet east of the intersection at Anderson Street.
- Modify and interconnect traffic signals at the intersection of Anderson Street and Redlands Boulevard; the intersection of Anderson Street and the EB on- and off-ramps; and the intersection of Tippecanoe Avenue and the WB on- and off-ramps/Harriman Place.
- Add a residential road connecting East Coulston Street, East Lee Street, and East Laurelwood Drive.
- Eliminate the South Ferree Street connection to East Rosewood Drive by providing a cul-de-sac at East Laurelwood Drive and South Ferree Street.
- Relocate wet and dry utility facilities to accommodate street widening and realignment.
- Provide a Class II bicycle lane within the project limits, with the exception of (1) the northbound direction of Anderson Street south of Redlands Boulevard, and (2) the segment of Anderson Street between the eastbound ramps and Redlands Boulevard, where 5 ft outside shoulders would be provided.

A rigid pavement section of 1.25' Jointed Plain Concrete Pavement (JPCP) over 0.10' Hot Mixed Asphalt (HMA) Bond Breaker over 0.50' Lean Concrete Base (LCB) over 0.70' Aggregate Subbase (AS) is proposed for the eastbound I-10 mainline widening and portions of the westbound I-10 mainline along ramp gore areas. A flexible pavement section of 0.20' Rubberized Hot Mixed Asphalt (RHMA) over 0.80' HMA over 0.50' Aggregate Base (AB) is proposed for the I-10 ramps and Tippecanoe Avenue. The pavement sections will be reviewed and finalized during the PS&E phase of the project.

Geometric drawings including Typical Cross Sections, Layouts, and Profiles are included in Attachment D. The Advance Planning Studies (APS) for the I-10/Tippecanoe Avenue Undercrossing and the I-10/San Timoteo Creek structure are included as Attachment E.

5.1.2.1 Nonstandard Mandatory and Advisory Design Features

Exceptions to advisory and mandatory design standards are required for this project. Fact Sheets for the following nonstandard mandatory and advisory design exceptions have been reviewed and approved by Caltrans:

Mandatory Design Exceptions

Design Exception Feature #1 – Stopping Sight Distance: Index 201.1 of the Highway Design Manual (HDM) states that Table 201.1 shows the standards for stopping sight distance related to design speed, and these shall be the minimum values used in design.

Nonstandard stopping sight distance is present on the mainline from Sta. 223+17.79 to Sta. 234+67.79. Based on the 80 mph design speed for the freeway, the standard stopping sight distance is 930 feet. However, the existing vertical crest curve on the freeway at this location provides a stopping sight distance of only 583 feet.

Design Exception Feature #2 – Superelevation Rates: Index 202.2 of the HDM states that maximum superelevation rates for various highway conditions are shown on Table 202.2. Based on

an e_{max} selected by the designer for one of the conditions, superelevation rates from Table 202.2 shall be used within the given range of curve radii. If less than standard superelevation rates are approved, Figure 202.2 shall be used to determine superelevation based on the curve radius and maximum comfortable speed.

Nonstandard superelevation rate is proposed at Tippecanoe Avenue WB off-ramp, "R-3" Line, from Sta. 30+28.93 to Sta. 32+15.49. Based on the curve radius of 335 feet, the standard superelevation rate is 12%. However, the proposed superelevation rate for this curve is 10%.

Design Exception Feature #3 – Corner Sight Distance: Index 405.1(2)(b) of the HDM states that at signalized intersections the values for corner sight distances given in Table 405.1A should be applied whenever possible. Where restrictive conditions exist, similar to those listed in Index 405.1(2)(a), the minimum value for corner sight distance at both signalized and unsignalized intersections shall be equal to the stopping sight distance as given in Table 201.1, measured as previously described.

Due to the proposed retaining wall, the driver from the inside left turn lane on the EB off-ramp at Tippecanoe Avenue, "R-1" Line, with a setback distance of 10 feet from the major road edge of shoulder, is allowed a sight line to approaching southbound vehicles on Tippecanoe Avenue with a Stopping Sight Distance of about 127 feet, while the inside right turn lane provides a Stopping Sight Distance of about 177 feet. This is less than the standard stopping sight distance of 360 feet based on a design speed of 45 mph.

Design Exception Feature #4 – Lane Width: Index 405.2(2)(a) of the HDM states that the lane width for both single and double left-turn lanes on State highways shall be 12 feet.

Nonstandard left-turn lane widths are proposed at the following locations along southbound Tippecanoe Avenue and Anderson Street:

Description	Station Limits		Standard Width (feet)	Proposed Width (feet)
	From	To		
Inside Southbound Left-Turn Lane to EB On-Ramp	"T" 228+25	"T" 231+50	12	11
Both Southbound Left-Turn Lanes to Redlands Blvd	"T" 224+04	"T" 225+70	12	11

Design Exception Feature #5 – Location and Design of Ramp Intersections on the Crossroads: Index 504.3(3) of the HDM states that for new construction or major reconstruction of interchanges, the minimum distance (curb return to curb return) between ramp intersections and local road intersections shall be 400 feet.

The distance between the Tippecanoe Avenue/EB ramps intersection and the Anderson Street/Redlands Boulevard intersection is about 166 feet and 167 feet (curb return to curb return) for NB and SB directions, respectively.

The distance between the Tippecanoe Avenue/WB ramps intersection and the Tippecanoe Avenue/East Lee Street intersection is about 238 feet (curb return to curb return).

Design Exception Feature #6 – Cross Slope: Index 301.2(a) of the HDM states that the standard cross slope to be used for new construction on the traveled way for all types of surfaces shall be 2%.

The proposed cross-slope of the EB mainline widening in the tangent section between Waterman Avenue and Tippecanoe Avenue is 3% in order to improve drainage flow off the traveled way.

Advisory Design Exceptions

Design Exception Feature #1 – Superelevation Transition: Index 202.5(1) of the HDM states that a superelevation transition should be designed in accordance with the diagram and tabular data shown in Figure 202.5A to satisfy the requirements of safety, comfort, and pleasing appearance.

Nonstandard superelevation transitions are proposed at the following locations:

Description	Station Limits		Standard Runoff Length (feet)	Proposed Runoff Length (feet)
	From	To		
WB Off-Ramp	"R-3" 29+50.92	"R-3" 31+20.00	240.00	169.08
WB Loop On-Ramp	"R-4" 39+40.00	"R-4" 41+44.05	300.00	204.05

Design Exception Feature #2 – Superelevation Runoff: Index 202.5(2) of the HDM states that two-thirds of the superelevation runoff should be on the tangent and one-third within the curve.

Nonstandard superelevation runoffs are proposed at the following locations:

Description	Station Limits		Standard Runoff Length (feet)	Proposed Runoff Length (feet)
	From	To		
WB Off-Ramp	"R-3" 29+50.92	"R-3" 31+20.00	160.00 – 80.00	78.01 – 91.07
WB Loop On-Ramp	"R-4" 39+40.00	"R-4" 41+44.05	136.00 – 68.00	65.00 – 139.05

Design Exception Feature #3 – Vertical Curves: Index 204.4 of the HDM states that for algebraic grade differences of 2 percent and greater, and design speeds equal to or greater than 40 miles per hour, the minimum length of vertical curve in feet should be equal to 10V, where V = design speed.

Nonstandard minimum vertical curve lengths are proposed at the following locations:

Description	Station Limits		Standard VC Length (feet)	Proposed VC Length (feet)
	From	To		
I-10	"A" 214+64.78	"A" 218+64.78	800	400
I-10	"A" 237+44.50	"A" 241+44.50	800	400

Design Exception Feature #4 – Side Slope Standards: Index 304.1 of the HDM states that slopes should be designed as flat as is reasonable. For new construction, widening, or where slopes are otherwise being modified, embankment (fill) slopes should be 4:1 or flatter.

The proposed WB loop on-ramp does not provide the standard Side Slope Rate 4:1 or flatter starting at the ramp merge with the WB mainline to the areas adjacent to the Tippecanoe Avenue Undercrossing. The ramp side slope rates from station "A" 218+00 to station "A" 230+00 will be approximately 2:1.

Design Exception Feature #5 – Angle of Intersection: Index 403.3 of the HDM states that a right angle intersection provides the most favorable conditions for intersecting and turning traffic movements. When a right angle cannot be provided due to physical constraints, the interior angle should be designed as close to 90 degrees as is practical, but should not be less than 75 degrees. Mitigation should be considered for the affected intersection design features.

The existing EB on-ramp does not provide the standard intersection angle. The existing intersection angle between EB on-ramp alignment and Tippecanoe Avenue alignment is about 70 degrees.

Design Exception Feature #6 – Distance Between Successive On-Ramps: Index 504.3(9) of the HDM states that the minimum distance between two successive on-ramps to a freeway lane should be the distance needed to provide the standard on-ramp acceleration taper shown on Figure 504.2A. This distance should be about 1,000 feet unless the upstream ramp adds an auxiliary lane in which case the downstream ramp should merge with the auxiliary lane in a standard 50:1 (longitudinal to lateral) convergence.

A nonstandard distance, 840 feet, would exist between the proposed WB loop on-ramp, "R-4" Line, and the existing WB on-ramp. After the ultimate widening of the mainline is implemented, the merge point for the WB loop-on ramp, "R-4" Line, would move further to the east thus providing the standard 1,000 feet distance between the successive on-ramps.

Design Exception Feature #7 – Weaving Sections: Index 504.7 of the HDM states that weaving sections in urban areas should be designed for LOS C or D. Weaving sections in rural areas should be designed for LOS B or C.

The proposed project does not provide the Level of Service (LOS) C or D, as required by the HDM, during Year 2035 PM peak period for the weaving section between Waterman Avenue EB on-ramp and Tippecanoe Avenue EB off-ramp. Traffic analysis shows LOS E during this period.

Design Exception Feature #8 – Access Control: Index 504.8 of the HDM states that for new construction or major reconstruction, access rights should be acquired on the opposite side of the local road from ramp terminals to preclude the construction of future driveways or local roads within the ramp intersection.

Access rights cannot be acquired on the opposite side of the WB off-ramp and WB loop on-ramp at Tippecanoe Avenue. The ramps begin and end at the Harriman Place/Tippecanoe Avenue intersection.

Index 504.8 of the HDM states that for new construction, access control should extend 100 feet beyond the end of the curb return or ramp radius in urban areas and 300 feet in rural areas, or as far as necessary to ensure that entry onto the facility does not impair operational characteristics.

At the southeast quadrant of the existing EB on-ramp terminus, the overall length of access control is 169.65 feet. However, at 88 feet away from the curb return a break for the driveway entrance to Baker's Burgers is maintained. The 100 foot access control was obtained at the other three quadrants of the ramp terminus.

Design Exception Feature #9 – Superelevation of Compound Curves: Index 202.6 of the Highway Design Manual (HDM) states that Superelevation of compound curves should follow the procedure as shown in Figure 206.6. Where feasible, the criteria in Index 202.5 should apply.

A nonstandard superelevation transition is proposed for the compound horizontal curve on the westbound loop on-ramp ("R-4" Line).

5.1.2.2 Interim Features

There are no proposed interim improvements within the project limits.

5.1.2.3 High Occupancy Vehicle (HOV) Lanes

An HOV preferential lane would be included as part of Alternative 1 on the proposed WB loop on-ramp.

5.1.2.4 Ramp Metering

Ramp metering is currently provided on the existing I-10 WB and EB on-ramps. The proposed WB loop on-ramp in Alternative 1 would provide the necessary geometry to accommodate ramp metering with an HOV bypass lane.

5.1.2.5 California Highway Patrol (CHP) Enforcement Areas

A CHP enforcement area is proposed on the WB loop on-ramp in conformance with Caltrans Highway Design Manual.

5.1.2.6 Park and Ride Facilities

There is no existing Park and Ride Facility located within the project limits, and none are proposed as part of Alternative 1. The Omnitrans E Street Corridor sbX Bus Rapid Transit Project includes a new Park and Ride facility at the west side of Anderson Street north of San Timoteo Creek.

5.1.2.7 Utilities

Preliminary utility verification research and mapping have been completed. Facilities owned by the following utility companies have been identified within the project limits, including overhead and underground lines:

- Southern California Edison Transmission and Distribution
- The Gas Company
- Verizon
- Time Warner Cable
- Sprint
- Golden State for Time Warner Telecommunication
- City of Loma Linda

- City of San Bernardino Water and Sewer
- The Gage Canal Company
- Loma Linda University Medical Center

Formal notices will be provided to affected utility owners indicating the need to pothole, protect, and/or relocate their utility facilities to accommodate the proposed project. The affected utility owners will then enter into a Utility Agreement concerning the work to be performed on the affected utility facility.

This project will environmentally clear all utility relocation work needed to construct the proposed improvements.

A utility information sheet for Alternative 1 has been prepared and included with the Right-of-Way Data Sheet in Attachment F. Preliminary mapping of existing utilities is included in Attachment G.

5.1.2.8 Railroad Involvement

There is no railroad involvement on this project.

5.1.2.9 Highway Planting

The proposed interchange improvements would require the removal of existing vegetation and the installation of new highway planting and irrigation facilities for erosion control and beautification. Proposed highway planting would be developed based on the I-10 Corridor Master Planting Plan and would comply with the Caltrans Plant Setback and Spacing Guide. Highway planting would consist of installing new planting, irrigation systems, maintenance vehicle pullouts, maintenance access drives, and special paving in gore points and raised medians. Planting designs would use context sensitive solutions to achieve the goals of the I-10 Corridor Planting Master Plan. Exhibits illustrating the project landscaping concept are included in Attachment H. Highway planting would take into consideration proposed treatment BMPs in order to provide a consistent and cohesive design. Plant materials and seed mixes would be suitable for the existing soils, climatic conditions, and be tolerant of poor air quality. Drought tolerant plants and seed mixes would be used to promote water conservation and early plant establishment. It is anticipated that proposed seed mixes would comply with Executive Order 13112 to prevent, to the extent practicable, the introduction of invasive species.

Landscape improvements outside of Caltrans right-of-way would be designed per City of San Bernardino and City of Loma Linda standards and would represent the existing streetscape planting themes.

The proposed project improvements include the installation of a fully automated irrigation system. The irrigation system would include the installation of water meters, irrigation controllers, flow sensors, gate valves, crossovers, piping, and electrical wiring. Automatic irrigation controllers capable of communicating to an off-site computer base station would be used to provide irrigation water management after the three-year plant establishment period. There are no existing or proposed recycled water supply lines near the project site. The design of the irrigation system would allow recycled water to be used when it becomes available in the future. Costs for highway planting and irrigation have been included in the project cost estimate.

5.1.2.10 Erosion Control

Erosion control would be implemented during and after construction where required to protect the transportation facility, and to meet water quality discharge requirements set forth by the Santa Ana Regional Water Quality Control Board. An Erosion Control Plan, and applicable specifications, would be incorporated as part of the PS&E package. Costs for erosion control have been included in the project cost estimate.

Slopes would be planted to minimize erosion. Potential erosion control measures during construction could include timing of grading to avoid the windy and rainy seasons; use of sandbags and/or hay bales in graded areas; silt fences; temporary drainage facilities; containment and settling ponds; and prompt seeding or re-vegetation of graded areas. Permanent vegetative erosion control would be applied to all finished slopes. Seed mixes for temporary erosion control areas would be composed of ornamental native and non-native wildflower and grass species to control erosion and enhance the freeway edge until the ultimate highway configuration is constructed. The use of low fuel seed mixes would reduce the propensity for wildfires.

Potential construction site BMPs include temporary fiber rolls, street sweeping, drainage inlet protection, concrete washout bins, and others listed in the Storm Water Data Report (SWDR). Storm water runoff within the project boundaries does not drain to any 303(d) listed water bodies. Therefore, there are no targeted design constituents and the treatment strategy is aimed at general pollutant removal. Potential permanent treatment BMPs include biofiltration swales along the south side of I-10 along the EB auxiliary lane and north of I-10 between the WB off-ramp and loop on-ramp. In addition, potential treatment BMPs to be constructed within the proposed WB loop-ramp include a biofiltration swale, media filter, or an extended detention basin.

A Storm Water Pollution Prevention Plan (SWPPP) will be required prior to grading any part of this project. The SWDR cover sheet is included as Attachment I.

5.1.2.11 Noise Barrier

A Noise Study Report (NSR) (LSA Associates, Inc., May 2009) was prepared for the project. The NSR evaluated impacts of the proposed project on noise sensitive receivers in the project vicinity and developed noise abatement measures. Approximate lengths, heights, reasonable allowance per benefited residence, and total reasonable allowance were developed for sound barriers that were determined to be feasible.

A Noise Abatement Decision Report (NADR) was prepared for this project to compile information from the NSR, other relevant environmental studies, and design considerations. The NADR includes construction cost estimates which are compared to reasonable allowances to identify which sound barriers are reasonable from a cost perspective. A preliminary noise abatement decision was made based on the reasonableness determination of the feasible sound barriers and nonacoustical feasibility issues, which were included in the DED for public circulation and review. A summary of the noise abatement decision is included in Section 6.8. The final decision of the noise abatement will be made upon completion of the project design and the public involvement processes.

5.1.2.12 Non-Motorized and Pedestrian Features

Anderson Street south of Court Street is identified as a Class II bicycle facility in the city of Loma Linda Master Plan of Bikeways. Class II bicycle facilities are proposed along Tippecanoe Avenue/Anderson Street within the project limits with the exception of (1) the northbound direction of Anderson Street south of Redlands Boulevard, and (2) the segment of Anderson Street

between the EB ramps and Redlands Boulevard. Traffic signal modifications along Tippecanoe Avenue/Anderson Street may include automatic detection systems for bicycles. Street lighting along Tippecanoe Avenue, Anderson Street and Redlands Boulevard will be provided to improve pedestrian and bicycle visibility and safety.

The project would remove existing sidewalk along the west side and reconstruct sidewalk along the east side of Tippecanoe Avenue/Anderson Street between Redlands Boulevard and Harriman Place. All access ramps and crosswalks impacted by the proposed improvements would be reconstructed in compliance with ADA accessibility guidelines. Crosswalk marking removal associated with the removal of the westerly sidewalk will require 30 days notice to the public prior to removal and will comply with California Vehicle Code 21950.5.

During construction, continuous access for pedestrians, individuals with disabilities, and bicyclists will be maintained and will be included in the development of stage construction and traffic handling plans during PS&E.

5.1.2.13 Needed Roadway Rehabilitation and Upgrading

The condition of the existing pavement was evaluated by reviewing the latest available Caltrans Pavement Condition Survey Inventory from 2007. Review of the survey results for existing rigid pavements where widening is proposed on this project indicate that only 1% of Lane 3 slabs and 4% of Lane 4 slabs exhibit 1st Stage slab cracking. No slabs exhibited 3rd Stage slab cracking. 1% of Lane 4 slabs exhibited corner slab cracking. Based on these results and field verification conducted in March 2009, rehabilitation of existing mainline pavement is not required as part of the interchange improvements.

The EB off-ramp and the WB off-ramp would be removed and reconstructed as part of the proposed interchange improvements. The existing EB on-ramp and WB on-ramp, which would not be impacted by the interchange improvements, have recently been rehabilitated by Caltrans. Additional rehabilitation to these ramps would not be required.

5.1.2.14 Cost Estimates

A detailed cost breakdown for the preferred alternative, Alternative 1, is included in Attachment J. The following table summarizes the cost for the construction and support components:

CONSTRUCTION COST*	
Roadway	$28,513,000
Structures	$3,969,000
RIGHT-OF-WAY*	$33,442,000
Total Project Capital Outlay	**$65,924,000**
SUPPORT COST	
PS&E	$3,848,000
Right-of-Way	$2,735,000
Construction Management	$4,371,000
Total Project Cost	**$76,878,000**

** Construction and Right-of-Way costs include 2% escalation for two years*

5.1.2.15 Right-of-Way Data

A Right-of-Way Data Sheet has been prepared for the preferred alternative, Alternative 1, and is included in Attachment F, which includes a cost estimate for right-of-way and utilities relocation.

5.1.2.16 Effects of Projects Funded by Others on State Highway

This project will be funded by Federal and local measure matching funds. As presented in the Supplemental Traffic Operations Analysis, freeway segments within the project limits operate at LOS E or better during the existing (2009) AM and PM peak hours. For the 2035 No Build and Alternative 1 conditions, all freeway segments would operate at LOS F during at least one of the peak hours. The impact is not caused by nor aggravated by the proposed project, and the volumes, density, and LOS are the same in both conditions. As an interchange project, the proposed improvements are not intended to improve traffic operations on the freeway mainline. However, the project would improve EB mainline operations between Waterman Avenue and Tippecanoe Avenue by adding an auxiliary lane, which would eliminate the Waterman Avenue EB on-ramp merge and the Tippecanoe Avenue EB off-ramp diverge, and add a weaving segment between these ramps. The proposed EB weaving segment is expected to operate at a better LOS than the existing EB ramp merge/diverge areas.

5.2 Rejected Alternatives

The following alternatives were determined to be non-viable after being evaluated in the PSR (PDS), Value Analysis (VA) study (May 13, 2003), and the post-VA study conducted by Caltrans in 2004-2005.

5.2.1 PSR (PDS) Alternative 2

This PSR (PDS) alternative proposed realigning the EB off-ramp to a hook ramp which intersected a realigned Redlands Boulevard. With this configuration there would be a signalized intersection at the hook ramps, realigned Redlands Boulevard, and proposed Evans Street. The WB ramps would be realigned to have the on- and off-ramps intersect at Tippecanoe Avenue and Laurelwood Drive on the north side of the freeway.

With this alternative, the EB weaving distance between the Waterman Avenue on-ramp and the Tippecanoe Avenue off-ramp is reduced from over 1,970 feet in the existing condition to 1,630 feet. Even with the addition of an auxiliary lane, the weaving analysis shows a LOS of borderline E/F for the AM peak hour in 2035 and LOS E in the PM peak hour in 2035. Although the mainline is already operating at LOS F, this hook ramp option would increase the congestion due to the reduced weaving length and cause the mainline to operate at LOS F for a longer period of time.

There are other design issues associated with this alternative that would likely require design exceptions. These include the reduced spacing of the EB interchanges to less than 3,280 feet, the nonstandard weave length, and interchange spacing being 1,640 feet away from Tippecanoe Avenue. In addition, there would be only a 164-foot tangent section on the EB hook off-ramp. Because of the negative impacts to the freeway operations and design exceptions, this alternative was considered non-viable.

5.2.2 PSR (PDS) Alternative 4

This PSR (PDS) alternative proposed an offset urban interchange. With this configuration there would be a four-way intersection where the EB and WB on- and off-ramps intersect at a common point on Tippecanoe Avenue, north of I-10. The EB on- and off-ramps would cross under the mainline to the north side of the freeway and connect at a single point, which would require

tunneling below grade. The mainline would also require realignment slightly to the north in order to allow for stage construction. The bridge would need to be replaced to accommodate the geometrics of the single point intersection and provide adequate sight distance.

An intersection analysis completed in 2002 using the Comprehensive Analysis Program for a Single Signalized Intersection (CAPSSI) revealed the need for a triple SB left-turn to the EB on-ramp based on year 2025 traffic forecasts. There were 1,001 PCEs with a 0.95 peak hour factor making the SB left-turn require three left-turn lanes to achieve a LOS D for that intersection leg and to provide a LOS D for the intersection. In addition, this SB triple left-turn created a queue of eight vehicles per lane, which exceeded the available storage length. The distance between the SB left-turn stop limit line at the EB on- and off-ramps and the NB left stop line at Laurelwood Drive would be only 334 feet. The SB queue of eight vehicles per lane requires approximately 300 feet of storage length. This would not leave sufficient room geometrically to accommodate the reversing lane pocket delineation and any storage for the NB left-turns at Laurelwood Drive.

On the mainline, the EB on-ramp auxiliary lane to Mountain View Avenue is reduced to 1,811 feet degrading the existing weave conditions on EB I-10 between Tippecanoe Avenue and Mountain View Avenue.

Other issues associated with this alternative included the need to provide pump stations to address drainage issues associated with the EB on- and off-ramps going below the mainline in tunnels. The profile of the traveled way would be as much as 20 feet below original ground. Additional easements would be required to accommodate the drainage system. Because of geometrics, groundwater levels, the fault zone, and the traffic operations issues with the triple left-turn and mainline weaving degradation, this alternative was considered to be non-viable.

5.2.3 Value Analysis Alternative 1

This alternative would construct a conventional urban interchange that would have a single point intersection under a realigned mainline. Each ramp would split traffic with left-turns approaching to a common signal and right-turns in separate split lanes for a merge/diverge with Tippecanoe Avenue. The right-turn lanes would not necessarily be signalized.

Due to the close proximity of the freeway to Redlands Boulevard, less than 656 feet, there is insufficient distance for the EB off-ramp traffic to access the Tippecanoe Avenue SB left-turn pocket to Redlands Boulevard. This would result in traffic backing up on the ramps, and possibly the mainline, due to an inability to access an allowable space to merge into the turn pocket.

Realignment of the mainline would be required to geometrically fit in all the required turn pockets and turning movements at this single point intersection. This realignment of the mainline would present significant staging challenges and impact freeway operations during construction. There would also be potentially severe impacts to commercial right-of-way on the north side of the mainline as the mainline would have to be realigned to the north to accommodate the geometrics required.

This alternative was considered not viable for the following reasons: inadequate geometrics for accessing required turning movements; the staging challenges; impacts to mainline operations; high costs associated with potentially severe right-of-way impacts; and complete bridge reconstruction and realignment of approximately 6,600 feet of mainline, which would still result in inadequate distance to access the required movements along Tippecanoe Avenue.

5.2.4 Value Analysis Alternative 2

This alternative proposed extending Evans Street north from Redlands Boulevard across the I-10 mainline up to Laurelwood Drive/Harriman Place. This alternative was developed to serve as a parallel north-south corridor to Tippecanoe Avenue to relieve some of the traffic on Tippecanoe Avenue. A new bridge over the I-10 mainline would be required and a new bridge over Redlands Boulevard would also be required as the distance between I-10 and Redlands Boulevard is not sufficient to achieve the required clearance. A new connector from Evans Street back to Redlands Boulevard would also be required in addition to either retaining walls or a large embankment for Evans Street south of Redlands Boulevard. Large retaining walls would also be required along Evans Street on the north side of I-10 to minimize the right-of-way impacts for the new Evans Street, since the alignment would go through developed property north of the freeway.

An analysis of the 2025 traffic model, the latest model available at the time of the analysis in 2004, indicated a reduction of traffic on Tippecanoe Avenue between 0 and 13 percent, depending on the location and direction. The reduction in traffic on Tippecanoe Avenue/Anderson Street from an added Evans Street overcrossing by itself was not sufficient to bring the LOS on the existing ramp intersections to an acceptable level without additional mitigation being required on the Tippecanoe Avenue/Anderson Street corridor. The construction of only a new overcrossing at Evans Street would still leave four signalized intersections in close proximity to each other, which creates a queuing problem through the corridor along with unacceptable LOS at these intersections. The tight spacing of the existing intersections would create back-ups onto the ramp and potentially the mainline.

The construction cost for the new Evans Street overcrossing would be significant and there would be significant right-of-way impacts as well, particularly on the north side of the freeway. Because of the relatively small improvement to the traffic operations on Tippecanoe Avenue/Anderson Street, the substandard geometric conditions, an unacceptable level of service and queuing, and the significant cost and impact to construct a new overcrossing, this alternative concept was considered non-viable.

5.2.5 Post VA Alternative 1 - Base Condition

This alternative would keep the EB and WB ramp locations the same as the existing condition. The ramps would be widened at the intersections with Tippecanoe Avenue/Anderson Street and Tippecanoe Avenue/ Anderson Street would be widened in each direction from Redlands Boulevard to north of Laurelwood Drive. To accommodate the widening, the I-10 bridge would need to be replaced to allow the through lanes and left-turn lanes in each direction to geometrically fit.

An analysis of the traffic operations of this alternative showed several issues. Due to leaving the existing condition of three closely spaced intersections, there is still a significant queuing problem with this alternative, as well as operational issues. In the PM peak hour, the Progression Analysis and Signal System Evaluation Routine (PASSER) analysis on the corridor showed that all four intersections, though having a marginally acceptable LOS, have a volume per capacity (v/c) ratio that ranged from 0.96 to 1.01. Typically any v/c over 0.95 indicates the intersection is not able to clear the traffic within the cycle length. The queuing is also unacceptable since there is such a short distance between the intersections. For the PM peak hour, the SB left-turn queue at the EB ramp intersection is almost 14 though the storage length available is only 263 feet, sufficient for about

seven to eight vehicles. At the WB ramp intersection, the NB left-turn queue is over 11 vehicles with the same storage length for seven to eight vehicles.

To mitigate the oversaturation of the intersections and the queuing, an additional through lane in each direction through the corridor would be required. This would require an even larger new bridge at Tippecanoe Avenue to accommodate 10 lanes, three through lanes in each direction and two left-turn lanes in each direction. This would be geometrically problematic as Tippecanoe Avenue/Anderson Street would then need to be further widened beyond the ramp intersections to allow for a transition to these 10 lanes. This would also require even more right-of-way, cost, and other impacts to address. The additional widening would not resolve the queuing issues between the closely spaced intersections. Because of the closely spaced intersections, extensive right-of-way needs, and bridge replacement requirements, this alternative was considered non-viable.

5.2.6 Post VA Alternative 2 - Alternatives 2a, 2b and 2c

These alternatives looked at various permutations of the EB on- and off-ramps. The WB on-and off-ramps would be the same as in viable Alternative 1 which consists of realigning the on- and off-ramps to loop ramps which converged at a single point at Laurelwood Drive. Alternatives 2a, 2b and 2c all have a hook ramp for the EB off-ramp onto Redlands Boulevard about 656 feet west of Tippecanoe Avenue. Alternative 2a has an EB on-ramp immediately adjacent to the EB off-ramp. Alternative 2b replaces the EB hook on-ramp with a loop ramp in the southeast quadrant of the interchange (east of Tippecanoe Avenue between I-10 and Redlands Boulevard). Alternative 2c has all the features of 2b and adds an additional EB loop on-ramp from SB Tippecanoe Avenue in the southwest quadrant of the interchange.

These alternatives create several traffic operations deficiencies. The EB hook off-ramp is located closer to the Waterman Avenue EB on-ramp than either the existing condition or viable Alternative 1. As a result, weaving operations are degraded from the existing condition and even if an auxiliary lane was added, the weaving operations would be inferior to viable Alternative 1. In addition to the degraded weave, which applies to Alternatives 2a, 2b and 2c, there are queuing problems with Alternative 2a. The EB queue for the NB left-turn at Redlands Boulevard was 20 vehicles in the AM peak hour from the PASSER analysis. This would exceed the allowable storage of 295 feet, which can accommodate only about eight vehicles. This would create the potential for traffic backing up onto the mainline from the ramp.

To alleviate the EB queue problem in Alternative 2a, Alternatives 2b and 2c were developed. Alternative 2b added a loop off-ramp for the EB traffic to go north on Tippecanoe Avenue. This movement can only be accommodated geometrically with the WB on- and off-ramps relocated to Laurelwood Drive as in viable Alternative 1 since the loop ramp merge on Tippecanoe Avenue would not allow access to the existing WB on-ramp. The addition of the EB to NB loop ramp would require the existing EB on-ramp from Tippecanoe Avenue to be relocated. A hook ramp on-ramp located adjacent to the new EB hook off-ramp was proposed; however, this creates merging traffic weaving with the diverging traffic for the EB off-ramp loop in the southeast quadrant. Another variant alternative, 2c, was developed to also improve the traffic operations. This alternative added an additional loop ramp for SB Tippecanoe Avenue traffic for EB I-10 traffic. This would eliminate the need for the EB hook on-ramp; however, it still creates the weaving conflict between the loop on-ramp traffic conflicting with the EB loop off-ramp. The NB Anderson Street traffic to EB I-10 would need to use an on-ramp moved from the existing location to south of the new loop ramp, which would be immediately north of the Redlands Boulevard/Anderson Street intersection. This would create severe difficulties for NB traffic accessing the ramp just beyond a signalized

intersection with no storage between that ramp and Redlands Boulevard. It would also create difficulties for WB Redlands Boulevard traffic turning north on Anderson Street trying to utilize the EB on-ramp. This traffic would need to effectively make a 180 degree turn to access this ramp.

Alternatives 2b and 2c would both require the relocation of the WB ramps similar to viable Alternative 1 to accommodate the loop ramp in the southeast quadrant of Anderson Street/Redlands Boulevard. As a result, these two alternatives would have more significant additional impacts than viable Alternative 1 and would have traffic operational deficiencies that viable Alternative 1 does not have. Because of the degradation of the EB weaving between Waterman Avenue and Tippecanoe Avenue, the queuing problems with Alternative 2a for the Redlands Boulevard EB left-turn and the problematic location of the EB on-ramp with Alternatives 2b and 2c, Alternatives 2a, 2b and 2c were considered non-viable.

5.2.7 Post VA Alternative 3 – Split Diamond Alternative

This alternative would connect Tippecanoe Avenue with a northerly extension of Evans Street (across I-10) via east-west frontage roads. The WB off-ramp and the EB on-ramp would connect to this frontage road at Tippecanoe Avenue. The EB off-ramp and WB on-ramp would connect to the frontage road at Evans Street. The extension of Evans Street to the north would require a new overcrossing bridge over I-10 and would go through existing businesses north of I-10. The extension over I-10 would also require Evans Street to be raised over Redlands Boulevard as there is inadequate distance between Redlands Boulevard and I-10 to attain the required mainline clearance. This would entail a new bridge for Evans Street over Redlands Boulevard with a new connector between Evans Street and Redlands Boulevard.

One main problem with this alternative is the WB weaving distance. The weave from the WB on-ramp from Evans Street to the Carnegie Lane/Hospitality Lane off-ramp is reduced from over 1,968 feet to 995 feet. This new weave operates at a LOS F in the year 2035 PM peak hour. In the EB direction, the weave length is also reduced from over 1,968 feet to less than 1,640 feet. This would result in a LOS of borderline E/F in the 2035 PM peak hour. The only other option that could be studied for the EB on- and off-ramps would be to grade separate the ramps; however, due to the tight spacing with Redlands Boulevard and the relatively short distance between Waterman Avenue and Evans Street this solution is problematic.

This alternative would also require design exceptions including the reduced spacing of interchanges, to less than 3,280 feet and the 995 foot auxiliary lane for weaving. Because of the inadequate WB weaving distance, the extensive right-of-way impacts to build the frontage road and the Evans Street extension, and the restriction of future expansion of I-10 with the construction of tight frontage roads, this alternative was determined to be non-viable.

5.2.8 Post VA Alternative 4 – Southeast Quadrant

This alternative would reconstruct the EB on- and off-ramps. These ramps would be reconfigured as hook ramps which converge at a location on Redlands Boulevard about 985 feet east of Anderson Street/Tippecanoe Avenue. The west ramps would remain at their existing location. The location of the new hook ramps would run through several large car dealerships on the north side of Redlands Boulevard in the City of Loma Linda.

A Synchro analysis of this alternative was performed which indicated that the queues for the EB off-ramp would likely back up onto the mainline in the AM peak hour. The queue for the Redlands Boulevard WB right-turn to Tippecanoe Avenue NB is over 1,970 feet. The LOS for the Redlands

Boulevard/Anderson Street intersection in the AM peak hour would be F. The long queue and the low LOS would cause traffic on Redlands Boulevard to back up beyond the new hook ramp intersection. EB off-ramp traffic would then back up on the ramps since Redlands Boulevard would be blocked for the exiting traffic.

Since the EB on- and off-ramps would be moved further to the east from the existing condition, the weaving operations between the EB on-ramp for Tippecanoe Avenue and the Mountain View Avenue EB off-ramp would be degraded. The existing EB weaving distance between the two interchanges is 2,238 feet and it would be reduced to 1,827 feet. If the hook ramps were moved further to the east to try to accommodate the large queue between Anderson Street and the EB off-ramp along Redlands Boulevard, the weaving distance would be further degraded from the existing condition.

Because the mainline operations would be degraded due to the potential queuing at the EB off-ramp and the weaving distance would be degraded from the existing and viable Alternative 1 and the severe right-of-way impacts for ramp realignments affecting two large car dealerships, this alternative was considered non-viable.

6 CONSIDERATIONS REQUIRING DISCUSSION

6.1 Hazardous Waste

An aerially-deposited lead (ADL) study was completed by EMI, Inc. in April 2009 for proposed excavation or soil disturbance areas within Caltrans right-of-way. Based on the sampling, testing, and analysis performed by EMI, Inc. the soils within the project were classified as either Soil Type Y2 (California hazardous waste) or Soil Type X (non-hazardous). Recommendations for the reuse of both types of soils during construction were made based on the California Department of Toxic Substance Control (DTSC) Variance. No additional costs for the reuse of lead-contaminated soils during construction are anticipated.

An asbestos study was conducted by Sigma Engineering, Inc. on the I-10/Tippecanoe Avenue Undercrossing (Bridge No. 54-098) and the I-10/San Timoteo Creek structure (Bridge No. 54-099) and results of the study are provided in a separate report. The study, approved by Caltrans in April 2009, indicated that none of the materials sampled contained asbestos concentrations above the method detection limit, resulting in no asbestos-containing construction materials (ACCM) identification during the survey.

An Initial Site Assessment (ISA) was prepared by EMI, Inc. in June 2009. The primary purpose of the ISA is to identify any potentially hazardous substances or petroleum products within the subject site based on the governmental records search, visual site survey and aerial photograph review. It includes a review of known and suspected releases from the site or adjoining properties into the on-site soil, groundwater, or surface water. The study includes releases of hazardous substances or petroleum products even under conditions in compliance with current laws. The ISA was conducted in accordance with Appendix DD of the Caltrans Project Development Procedures Manual, "Preparation Guidelines for Initial Site Assessment (ISA) Checklist for Hazardous Waste."

The ISA recommends the following additional studies during subsequent phases of the project to identify the presence of any additional hazardous wastes:

- A lead study should be conducted adjacent to all residential and commercial structures (all painted structures) to be removed within the subject site. The study should be conducted by

trained and/or licensed professionals in accordance with Caltrans guidelines. It should include the collection and analyses of soil immediately adjacent to the painted structure. The field and analytical data obtained during this study should be used to provide a review of the sampling locations, summary of analytical results, extent of lead-impacted soil (if identified) and recommendations for the handling, stockpiling, reuse, and/or off-site transportation and disposal of lead-impacted soil (as needed).

- Due to the possible presence of elevated lead concentrations within the striping paint along I-10 and associated roadways, it is recommended that the paint be sampled and tested for lead by trained and/or licensed professionals. Representative samples of striping paint should be collected along both sides of the highway and associated roadways. The field and analytical data obtained during this study should be used to provide a review of the sampling locations and descriptions, summary of the analytical results, and recommendations for striping paint removal, containment, and off-site transportation and disposal (as appropriate).
- An asbestos survey should be conducted at all of the building structures to be removed within the construction area that are older than 1979 (asbestos in construction materials was generally phased out in the early to mid-1970s). Asbestos surveys must be overseen by a California Certified Asbestos Consultant. The results of these surveys should provide a description of the asbestos-containing materials, their locations, estimated quantity, and recommendations for removal, containment, and off-site transportation and disposal.
- Building structures older than 1979 within the planned construction areas should be assessed for the possible presence of lead-based paint. Lead use in commercial paint was prohibited in 1978. This study must be conducted by trained and/or licensed professionals. The results of this study should provide a description of the lead-based paint locations, estimated quantity, and recommendations for removal, containment, and off-site transportation and disposal. While assessing building structures within the planned construction area, it is recommended that a trained and licensed environmental professional also assess for the possible presence of Polychlorinated Biphenyls (PCB) and mercury within and adjacent to buildings. Pole-mounted transformers were located along the northern sides of Rosewood Drive, Laurelwood Drive, and Lee Street. Pad-mounted transformers were located adjacent to an abandoned restaurant (Wendy's) and Denny's Restaurant. Other PCB sources (such as light ballasts) are suspected within the commercial and residential structures. Suspected mercury sources within the structures in the planned construction areas include thermostats and florescent bulbs. The results of this study should provide a description of the PCB and mercury source locations, estimated quantity, and recommendations for removal, containment, and off-site transportation and disposal.
- There is a potential that gasoline-impacted soil could be encountered during excavation activities near or at the Thrifty Oil property (1945 S. Tippecanoe Avenue) and the former Union 76 service station (24891 Redlands Boulevard). Due to this potential, it is recommended that a health, safety, and emergency contingency plan be established prior to excavation activities. This plan should establish health and safety guidelines and requirements for personnel involved in the possible removal of impacted soil. This plan, to be developed by an experienced environmental professional, must provide safe handling procedures or any encountered gasoline-impacted soil. The plan should include, but not be limited to, a description of the anticipated contaminant locations and depths, anticipated volumes to be generated during excavation activities, safe handling procedures, and appropriate soil disposal methods. Reports detailing the horizontal and vertical extent of

impacted soil at these locations can be obtained from: http://geotracker.swrcb.ca.gov. This plan should be approved by Caltrans prior to use.

- Soil excavations conducted on-site be monitored (by the construction contractor) for visible soil staining, odor, and the possible presence of unknown hazardous-material sources, such as buried 55-gallon drums and underground tanks. If hazardous materials contamination and/or sources are suspected or identified, an environmental professional should evaluate the course of action required.

There are no feasible project alternatives that will avoid potentially hazardous waste sites.

6.2 Value Analysis

A VA study was completed on May 13, 2003 to comply with the Federal Value Engineering (VE) Mandate and to explore alternatives that will enhance the project performance. The VA proposed nine more alternatives or variations, of which two were considered promising for further study. Subsequent to this, Caltrans conducted internal studies and an internal VA on the project in 2004 and 2005. This resulted in a separation of the interchange project and the adjacent Evans Street corridor into separate projects. Four additional alternatives were proposed for further study on the interchange. As part of this alternatives analysis, two of the three build alternatives from the PSR (PDS) were found to be non-viable. The third alternative from the PSR (PDS) was revised to eliminate the connectivity to the Evans Street corridor to make it a stand-alone project. All the proposed alternatives were evaluated in a traffic study that was submitted, in September 2006, and subsequently approved by Caltrans. The conclusion from the study was that two of the three PSR (PDS) build alternatives, the two VA alternatives, and the four Caltrans proposed alternatives all had features which resulted in the alternatives not being viable because of various geometric issues, degraded freeway performance, right-of-way impacts, and costs. Exhibits showing the rejected alternatives are included in Attachment K. The only recommended viable alternative was one of the build alternatives in the PSR (PDS) with the eliminated connectivity to Evans Street, referred to as Alternative 1 in this report.

6.3 Resource Conservation

The existing asphalt concrete and the Portland Cement Concrete pavement to be removed would be crushed to aggregate base material and incorporated into the new pavement structural section of the proposed project. The proposed project intends to maximize the use of the existing hardware items as well. This can be achieved by relocating any usable existing signs, lighting and traffic signal poles. The signs identified for removal would be available for recycling.

6.4 Right-of-Way Issues

A Right-of-Way Data Sheet has been prepared and included in Attachment F for the improvements proposed in the preferred alternative, Alternative 1, which would require new permanent right-of-way in all four quadrants of the interchange. The proposed WB on- and off-ramps would require full and partial acquisitions of residences and businesses in the northeast quadrant. In the southwest and southeast quadrants, the major construction work involves widening of Redlands Boulevard and Anderson Street, requiring partial acquisitions. In the northwest quadrant, partial acquisitions would be required to reconstruct the NW and SW corners of the Harriman Place/Tippecanoe Avenue intersection. In general, the partial acquisitions consist of several feet of frontage area along major arterials.

Temporary construction easements would also be required in all four quadrants to construct and widen local streets, construct ramps, retaining walls and potential sound walls, and widen the I-10 structure over San Timoteo Creek. Improvements to commercial driveways along Anderson Street and Redlands Boulevard would be required as a result of roadway widening.

A Final Relocation Impact Report (FRIR) has been prepared to address potential problems that may be caused by the displacement of existing land uses and their owners/occupants by the proposed project. The FRIR identifies the relocation of residential and commercial uses and occupants associated with the proposed project; the replacement housing for those to be displaced by the proposed project; and any relocation issues. A full discussion of the FRIR is included in the FED. It is anticipated that adequate relocation opportunities within the cities of Loma Linda, San Bernardino, and Redlands could exist for all residents and businesses that would potentially be displaced as a result of the proposed project. The Caltrans Relocation Assistance Program (RAP) will be implemented as part of the property acquisition process for the project. The RAP is based on the Federal Uniform Relocation Assistance and Real Property Acquisition Policies Act of 1970 (as amended) and Title 49 Code of Federal Regulations (CFR) Part 24. The RAP provides appropriate procedures to ensure adequate and appropriate relocation of all displaced persons regardless of the cost and availability of housing.

6.5 Environmental Issues

Caltrans is the California Environmental Quality Act (CEQA) Lead Agency and the National Environmental Policy Act (NEPA) Lead Agency for this project. As owner-operator of the State Highway System (SHS), Caltrans is the CEQA Lead Agency for all improvement projects on the SHS. Effective July 1, 2007, Caltrans has been assigned environmental review and consultation responsibilities under NEPA pursuant to 23 U.S.C. 327. The environmental review, consultation, and any other action required in accordance with applicable Federal laws for this project is being, or has been, carried out by Caltrans under its assumption of responsibility pursuant to 23 U.S.C. 327.

Caltrans has determined for this project that the appropriate environmental documentation for CEQA compliance is an Initial Study (IS), and for NEPA compliance, an Environmental Assessment (EA). Caltrans has adopted a Mitigated Negative Declaration (MND) for the IS and a Finding of No Significant Impact (FONSI) for the EA.

The IS/EA was prepared in accordance with Caltrans' environmental procedures, as well as State and federal environmental regulations. A copy of the cover page and title sheet of the Initial Study with Mitigated Negative Declaration / Environmental Assessment is included in Attachment L.

Various environmental technical studies were completed in support of the IS/EA. These studies include:

- Air Quality Assessment Report
- Archaeological Survey Report (ASR)
- Community Impact Assessment (CIA)
- Historic Property Survey Report (HPSR)
- Historical Resources Evaluation Report (HRER)
- Initial Site Assessment (ISA)
- Natural Environmental Study (Minimal Impacts) (NES MI)
- Noise Study Report (NSR)
- Noise Abatement Decision Report (NADR)

- Paleontological Identification Report and Paleontological Evaluation Report (PIR/PER)
- Final Relocation Impact Report (FRIR)
- Summary of Floodplain Encroachment
- Visual Impact Assessment (VIA)
- Water Quality Assessment Report (WQAR)
- Traffic Analysis

Copies of these reports are on file and available at SANBAG and the cities of Loma Linda and San Bernardino offices.

6.6 Air Quality Conformity

The project is included in the 2008 Regional Transportation Plan (RTP), which was found to be conforming by the FHWA/Federal Transit Administration (FTA) on June 5, 2008. The project is also in the adopted 2011 FTIP, which was approved by FHWA on December 14, 2010. The proposed project will also comply with all South Coast Air Quality Management District (SCAQMD) requirements.

The project-level Particulate Matter (PM) hot-spot analysis was presented to SCAG's Transportation Conformity Working Group (TCWG) for discussion and review on November 28, 2006. This project was approved and concurred on by Interagency Consultation at the TCWG meeting as a project not having adverse impacts on air quality and meeting the requirements of the Clean Air Act (CAA) and 40 CFR 93.116.

The results of the air quality analysis indicate that the proposed project will not cause any violations or exceedances of the State and national ambient air quality standards (CAAQS or NAAQS) due to the following:

- The project is consistent with the design concept and scope of the project as listed in the following documents: (1) SCAG 2008 RTP, (2) SCAG 2011 FTIP, (3) the mobility goals of the Regional Congestion Management Plan, and (4) Caltrans Route Concept Fact Sheet for I-10 (March 2000).
- The proposed project has undergone air quality conformity analysis for the basin.
- Based on CO, PM_{10}, and $PM_{2.5}$ assessments, the project will not cause or contribute to localized violations of any federal air quality standard.
- The future NO_x, CO, PM_{10}, and $PM_{2.5}$ emissions levels within the SCAG region, which includes the proposed project, are projected to be less than the applicable SIP emissions budget.

6.7 Title VI Considerations

Implementation of Alternative 1 would not result in any disproportionately high or adverse impacts on minority of low-income neighborhoods or communities. Caltrans and FHWA policies demonstrate a commitment to Title VI of the Civil Right Act, which provides that no person in the United States shall, on the grounds of race, color, national origin, sex, disability, or age be excluded from participation in, be denied the benefits of, or be otherwise subjected to discrimination under any program or activity receiving federal financial assistance.

The proposed project improvements include reconstruction of access ramps at all intersections within the project limits and accommodation of bus facilities along Tippecanoe Avenue/Anderson Street.

6.8 Noise Abatement Decision Report

A NADR (LSA Associates, Inc., July 2009) was prepared as a separate document for the project. This section represents the NADR which:

- Is an evaluation of the reasonableness and feasibility of incorporating noise abatement measures into this project;
- Constitutes the preliminary decision on noise abatement measures to be incorporated into the DED; and
- Is required for Caltrans to meet Title 23, Code of Federal Regulation, Part 772 of the Federal Highway Administration standards.

The NADR does not present the final decision regarding noise abatement; rather, it presents key information on abatement to be considered throughout the environmental review process, based on the best available information at the time the DED is published. If a project is subject to federal review, but does not have a circulated ED, the NADR section documents the final noise abatement decision.

The NADR does not address noise barriers or other noise-reducing treatments required as mitigation for significant adverse environmental effects identified under the California Environmental Quality Act (CEQA).

The NSR for this project was prepared by LSA Associates, Inc. in May, 2009 and approved by Caltrans Environmental Oversight on May 11, 2009. Table 11 summarizes the findings of the NSR.

Table 11: Summary of Feasible Sound Barriers from Noise Study Report

Sound Barrier No.	Location	Approx. Length (feet)	Height (feet)	Acoustically Feasible	Number of Benefited Residences[1]	Reasonable Allowance per Residence	Total Reasonable Allowance
1	Edge of Mainline Shoulder	2,413	8	Yes	2	$50,000	$100,000
		2,413	10	Yes	9	$52,000	$468,000
		2,413	12	Yes	11	$52,000	$572,000
		2,413	14	Yes	22	$52,000	$1,144,000
2	Property Line	708	8	Yes	4	$50,000	$200,000
		708	10	Yes	9	$52,000	$468,000
		708	12	Yes	9	$52,000	$468,000
		708	14	Yes	9	$52,000	$468,000
		708	16	Yes	9	$52,000	$468,000
3	Property Line	709	6	Yes	9	$52,000	$468,000
		709	8	Yes	12	$54,000	$648,000
		709	10	Yes	12	$54,000	$648,000
		709	12	Yes	14	$54,000	$756,000
		709	14	Yes	14	$56,000	$784,000
		709	16	Yes	14	$56,000	$784,000

Sound Barrier No.	Location	Approx. Length (feet)	Height (feet)	Acoustically Feasible	Number of Benefited Residences[1]	Reasonable Allowance per Residence	Total Reasonable Allowance
5	Right-of-Way Line	295	12	Yes	1	$50,000	$50,000
		295	14	Yes	1	$50,000	$50,000
		295	16	Yes	1	$50,000	$50,000

Source: LSA Associates, Inc., Noise Study Report, May 2009.
[1] Number of residences that are attenuated by 5 dBA or more by the modeled barrier.
dBA = A-weighted decibels

A summary of key information used in making the preliminary noise abatement decision is shown in Table 12.

Table 12: Summary of Abatement Key Information

Sound Barrier No.	Height (feet)	Acoustically Feasible	Number of Benefited Residences[1]	Total Reasonable Allowance	Estimated Construction Cost[2]	Reason-able	Break LOS[3]
1	8	Yes	2	$100,000	$1,521,000	No	No
	10	Yes	9	$468,000	$1,764,431	No	No
	12	Yes	11	$572,000	$2,173,300	No	No
	14	Yes	22	$1,144,000	$2,250,861	No	No
2	8	Yes	4	$200,000	$260,017	No	No
	10	Yes	9	$468,000	$309,187	Yes	No
	12	Yes	9	$468,000	$363,467	Yes	No
	14	Yes	9	$468,000	$417,747	Yes	Yes
	16	Yes	9	$468,000	$481,467	No	Yes
3	6	Yes	9	$468,000	$213,604	Yes	No
	8	Yes	12	$648,000	$260,382	Yes	Yes
	10	Yes	12	$648,000	$309,621	Yes	Yes
	12	Yes	14	$756,000	$363,978	Yes	Yes
	14	Yes	14	$784,000	$418,334	Yes	Yes
	16	Yes	14	$784,000	$482,144	Yes	Yes
5	12	Yes	1	$50,000	$152,378	No	Yes
	14	Yes	1	$50,000	$174,994	No	Yes
	16	Yes	1	$50,000	$201,544	No	Yes

Source: LSA Associates, Inc., Noise Abatement Decision Report, July 2009.
[1] Number of residences that are attenuated by 5 dBA or more by the modeled barrier.
[2] Sound barrier construction costs were provided by RMC, Inc. (July 2009).
[3] This column indicates whether the sound barrier is high enough to break the line of sight (LOS) between the receiver and truck exhaust stacks per Highway Design Manual Chapter 1100.

Based on the above key information, other non-acoustical factors, and the Noise Abatement Focus Meeting held on April 28, 2009, the recommended sound barrier (SB) heights for SB Nos. 2 and 3 are shown in Table 13.

Table 13: Recommended Sound Barriers

Sound Barrier No.	Height (feet)
2	14
3	8

The recommended sound barrier heights were determined based on the minimum sound barrier height that breaks the line of sight between the receiver and a truck exhaust stack and the lowest sound barrier construction cost. The Caltrans *Traffic Noise Analysis Noise Protocol* specifies that sound barriers should be high enough to block the noise from a truck exhaust stack. In addition, the recommended sound barrier height of 14 feet for SB No. 2 would provide the maximum number of benefited residences. A sound barrier height of 8 feet was recommended for SB No. 3 to prevent stagnant air created by higher barriers and to reduce a feeling of confinement in the outdoor active use areas, which are relatively shallow. The preliminary noise abatement decision presented in the NADR was included in the DED, which was circulated for public review. The approximate locations of the recommended sound barriers are shown in Attachment D.

The preliminary noise abatement decision presented in the NADR is based on preliminary project alignments and profiles, which may be subject to change. As such, the physical characteristics of noise abatement described herein also may be subject to change. If pertinent parameters change substantially during the final project design, the preliminary noise abatement decision may be changed or eliminated from the final project design. The final decision of the noise abatement will be made upon completion of the project design and the public involvement processes.

7 OTHER CONSIDERATIONS AS APPROPRIATE

7.1 Public Hearing Process

A Notice of Intent to Adopt a Mitigated Negative Declaration and Availability of Initial Study/ Environmental Assessment, Notice of Public Hearing was published on October 21, 2009. The Draft IS/EA was circulated for a 30-day public review period. The public hearing was held at Victoria Elementary School in the City of San Bernardino on November 5, 2009. Public comments received during the review period and at the public hearing have been incorporated into the FED.

7.2 Route Matters

The project proposes to modify access to I-10 by realigning the WB off-ramp and constructing a new WB loop on-ramp with the ramp termini relocated north along Tippecanoe Avenue. These modifications require a Modified Access Report (MAR), which has been prepared as a separate document. In addition, two modified freeway agreements will be required for the city of Loma Linda and city of San Bernardino.

The I-10 Route Concept Fact Sheet, dated March 2000, identifies future widening to include two HOV lanes, one in each direction. The proposed improvements for this project, including the widening of the I-10/Tippecanoe Avenue Undercrossing and the I-10/San Timoteo Creek structure, are designed to accommodate the HOV lanes and are consistent with the Route Concept Fact Sheet.

7.3 Permits

The following permits will be required for this project:

- County of San Bernardino Flood Control District Encroachment Permit
- State Right of Way Encroachment Permit
- Section 401 RWQCB Certification
- Section 404 ACOE Nationwide Permit (NWP)
- CDFG Streambed Alteration Notification (agreement or letter of non-jurisdiction)
- General Construction Activity NPDES Permit (SWRCB)

This project is subject to the Caltrans Statewide NPDES Storm Water Permit and Waste Discharge Requirements (Order No. 99-06-DWQ, NPDES No. CAS000003 and CAS000002).

7.4 Cooperative Agreements

Cooperative Agreement Number 8-1229, which was amended on January 7, 2009, sets forth the terms and conditions for Caltrans and SANBAG, outlining responsibilities for the PA/ED phase of the project. Separate agreements will be required for the right-of-way, PS&E, and construction phases of the project.

7.5 Other Agreements

Maintenance agreements and any other necessary agreements will be developed as required by the project. Maintenance Agreements with the City of San Bernardino and with the City of Loma Linda for traffic signals, street lighting, pavement rehabilitation and landscaping will likely be required. Freeway Agreements with both cities will be modified to document the revised traffic circulation features of the interchange, revisions to local street connections to the freeway, and modifications to local streets required to maintain traffic circulation in relation to the freeway.

7.6 Involvement with a Navigable Waterway

There are no navigable rivers within the proposed project limits.

7.7 Transportation Management Plan

A Transportation Management Plan (TMP) is required for this project. The objective of a TMP is to minimize project-related traffic delay and maximize safety for the motorists during construction without compromising the quality of work being performed.

A TMP Data Sheet (Attachment M) has been developed to provide recommendations to minimize the traffic impacts of construction activities so as to provide the highest level of traffic circulation and access during the construction period. Based on the TMP Data Sheet information, the impacts of the project to the freeway mainline and local roads are estimated to be medium while the impacts to the freeway ramps are estimated to be high. Various elements, as well as the associated cost for each strategy, are outlined in the TMP Data Sheet.

7.8 Stage Construction

Construction of the proposed improvements is scheduled to begin in October 2012 and end in March 2014. The proposed construction sequencing is intended to provide immediate congestion relief to the I-10 EB off-ramp to Anderson Street and the Anderson Street/Redlands Boulevard intersection by increasing the capacity of these facilities. Five major construction stages are anticipated to construct the proposed project improvements. Stage Construction Index Sheets are included in Attachment N.

Stage 1 construction involves widening the Tippecanoe Avenue Undercrossing along WB I-10 and the San Timoteo Creek structure along EB I-10, replacing the existing concrete lined trapezoidal channel with an underground RCB culvert between San Timoteo Creek and Anderson Street, adding an auxiliary lane along the EB I-10 mainline, and realigning the Tippecanoe Avenue EB off-ramp. In this stage, detours may be required for realignment of the I-10 EB off-ramp and construction of the off-ramp concrete termini. Motorists can use Waterman Avenue, Hospitality Lane, and Redlands Boulevard to bypass the construction sites. Traffic impacts are anticipated to be minor as the closure of Tippecanoe Avenue and EB off-ramp at Tippecanoe Avenue would be done overnight and

during the weekend. Construction of the EB off-ramp concrete terminus would require a weekend closure.

Stage 2 construction focuses on widening Anderson Street and Redlands Boulevard. During construction, driveway access to local businesses and residents would be maintained. Pedestrian access can be maintained during construction by constructing the street widening improvements in halves. Bus stops may need to be relocated temporarily outside the construction area. After the streets are widened, existing medians can be removed and paved/reconstructed in their proposed locations.

Stage 3 construction is comprised of the realignment of Laurelwood Drive, constructing the new WB off-ramp at Tippecanoe Avenue, and widening Tippecanoe Avenue north of the intersection. No closure is anticipated as motorists would be able to continue utilizing the existing WB off-ramp while the new ramp is being constructed.

Stage 4 construction activities include construction of the new WB loop on-ramp at Tippecanoe Avenue and widening the remainder of Tippecanoe Avenue. The existing WB off-ramp would be removed in this stage after traffic has been shifted to the newly constructed WB off-ramp. No closures are anticipated for this stage of construction.

Stage 5 construction completes the improvements along Tippecanoe Avenue. After Tippecanoe Avenue is widened, existing medians can be removed and reconstructed in their proposed locations.

7.9 Accommodation of Oversize Loads

There are no existing or proposed vehicle height restrictions along I-10 through the project limits, including during construction.

7.10 Graffiti Control

A graffiti-prone area is defined as an urban area in the San Bernardino County. Since this project lies within a graffiti-prone area, the final design will include details to prevent access to bridges, signs, and walls. In addition, the abutments, retaining walls, and other vertical surfaces, will be constructed using a fractured-rib finish, or other similar finish treatments, for the prevention of graffiti.

7.11 Drainage

The general drainage patterns within the project vicinity are from southeast to northwest. Regional drainage facilities include San Timoteo Creek which crosses the project site near the western project limit. San Timoteo Creek discharges to the Santa Ana River which runs east to west about 0.75 mile north of the project site. Existing drainage systems within the project limits generally drain to the San Timoteo Creek. Onsite runoff is collected by drainage systems in the median and on the shoulders which connect to existing cross culverts that discharge to earthen channels or concrete lined trapezoidal channels which parallel the mainline. South of I-10, the existing concrete lined trapezoidal channel crosses under Anderson Street in a double reinforced concrete box (RCB) culvert.

Drainage system improvements are proposed to collect and convey the design flow from the project site while maintaining existing flow patterns and incorporating existing drainage systems as much as possible. As a result of the EB mainline widening and EB ramp improvements, the existing

concrete lined trapezoidal channel south of I-10 would be replaced with a double 6'x4' RCB culvert between San Timoteo Creek and Anderson Street. Existing drainage facilities that outlet into the concrete lined trapezoidal channel would be extended to tie in directly to the proposed double RCB. A biofiltration swale is also proposed above the downstream end of the proposed double RCB culvert that would treat storm runoff from the EB off-ramp. Portions of the storm runoff from the mainline and WB on and off-ramps would be drained with inlets into closed drainage systems and routed into proposed biofiltration swales located in the WB ramps infield areas. New storm drain connections would also be proposed at the ramp curb returns on Tippecanoe Avenue and Anderson Street to tie into the existing local drainage systems.

7.12 Federal Involvement

Per the current Joint Stewardship and Oversight Agreement (Agreement) between Caltrans and FHWA, dated September 2007, this project is considered to be a High Profile Project. A High Profile Project Responsibilities List has been signed and agreed upon for this project on May 21, 2008. However, should any future situation or circumstance arise that will potentially declassify the project as a High Profile Project, Caltrans shall notify FHWA and reassess this project using the High Profile Project selection outlined in the Agreement.

The MAR was prepared to obtain FHWA approval on the modified access to I-10. FHWA provided the Engineering and Operational Acceptability Determination on October 15, 2009. Final approval of the MAR will be contingent upon completion of the planning and environmental process.

7.13 Life Cycle Cost Analysis for Pavements

A Life Cycle Cost Analysis (LCCA) for pavements was performed for both freeway mainline and ramp improvements. The LCCA evaluates alternative pavement sections and identifies the lowest total cost alternative. The total cost of each pavement alternative accounts for initial construction, future maintenance and rehabilitation, and user costs (travel time and vehicle use) over the design life of a pavement alternative. The alternatives evaluated in the LCCA were developed and recommended in the approved Preliminary Materials Report (November 2010). Based on the results of the LCCA, the following pavement sections were selected: a rigid pavement section of 1.25' Jointed Plain Concrete Pavement (JPCP) over 0.10' Hot Mixed Asphalt (HMA) Bond Breaker over 0.50' Lean Concrete Base (LCB) over 0.70' Aggregate Subbase (AS) for the eastbound I-10 mainline widening and portions of the westbound I-10 mainline along ramp gore areas; a flexible pavement section of 0.10' Open Graded Friction Course (OGFC) over 0.20' Rubberized Hot Mixed Asphalt (RHMA) over 0.80' HMA over 0.50' Aggregate Base (AB) for the I-10 ramps. The LCCA Forms are included as Attachment O.

8 PROGRAMMING

8.1 Programming

This project is programmed in the SCAG adopted 2011 FTIP. An amendment to update the funding amounts was submitted as part of the 2011 FTIP Amendment #1, which was approved by FHWA on December 30, 2010. Funding sources per the 2011 FTIP Amendment #1 are shown in Table 14.

SANBAG is committed to completing the PA/ED (EA Phase Code 0), and the PS&E (EA Phase Code 1).

8.2 Funding

The funding for the PA/ED is from Federal Demonstration funding with Measure I match. The PA/ED is anticipated to be complete in Winter 2010. It is anticipated that SANBAG will manage the PA/ED and PS&E with Caltrans providing oversight for this project. Table 14 shows the project funding amounts per the 2011 FTIP Amendment #1.

Table 14: Project Funding

Year	Fund	Engineering	R/W	Construction
Prior	Federal	515	25,054	
Prior	State		2,500	
Prior	Measure I / Local	6,948	6,146	825
2011/2012	Federal			26,961
2011/2012	Measure I / Local			9,821
	Subtotal	7,463	33,700	37,607
	Total	78,770		

Values are in 1,000's of dollars

8.3 Schedule

Table 15 lists the major project milestones for this project.

Table 15: Project Milestones

Phase	Start	Completion
Project Report and Environmental Document	July 2004	December 2010
Plans, Specifications & Estimates	June 2010	October 2012
Right-of-Way	June 2010	July 2012
Construction	October 2012	March 2014

9 REVIEWS

This PR was reviewed by the following agencies:

Reviewer	Title	Date
Aaron Burton	Senior Environmental Planner Branch Chief, Environmental Studies B Caltrans District 8	10/14/09
Luis Betancourt	Design Coordinator Caltrans Headquarters	10/6/09
Tay Dam	Senior Transportation Engineer FHWA	10/7/09
Syed Raza	Deputy District Director Traffic Operations Caltrans District 8	10/6/09
Jon Bumps	Design Oversight Caltrans District 8	10/6/09
Quyen Sy	Design Oversight Caltrans District 8	10/6/09

10 PROJECT KEY PERSONNEL

Garry Cohoe ..... (909) 884-8276
Director of Freeway Construction
SANBAG

Scott Neff ..... (909) 884-8276
Project Manager
SANBAG

Jamal Salman ..... (714) 662-3020
Consultant Project Manager
RMC, Inc.

Michael Han ..... (714) 662-3020
Consultant Project Engineer
RMC, Inc.

Meardey Tim ..... (909) 383-6480
Project Manager
Program and Project Management
Caltrans District 8

Jon Bumps ..... (909) 383-4952
Design Oversight
Caltrans District 8

Quyen Sy ..... (909) 383-4992
Design Oversight
Caltrans District 8

Luis Betancourt ..... (916) 651-6551
Design Coordinator
Caltrans Headquarters

Aaron Burton ..... (909) 388-1804
Senior Environmental Planner
Branch Chief, Environmental Studies B
Caltrans District 8

Betty Bobosik ..... (909) 383-4696
Right of Way Local Programs
Office of Right-of-Way
Caltrans District 8

Lisa Williams ..... (949) 553-0666
Environmental Consultant Project Manager
LSA Associates, Inc.

11 ATTACHMENTS

Attachment A – Project Location Map

Attachment B – Category Determination Request Letter

Attachment C – Approved PSR (Cover)

Attachment D – Geometric Drawings

Attachment E – Advance Planning Study (APS)

Attachment F – Right-of-Way Data Sheet

Attachment G – Existing Utility Plans

Attachment H – Landscaping Concepts

Attachment I – Storm Water Data Report (Cover)

Attachment J – Project Cost Estimate

Attachment K – Rejected Alternatives

Attachment L – Environmental Document (Cover and Title Sheet)

Attachment M – Transportation Management Plan Data Sheet

Attachment N – Stage Construction Index Sheets

Attachment O – Life Cycle Cost Analysis Forms

ATTACHMENT A

Project Location Map

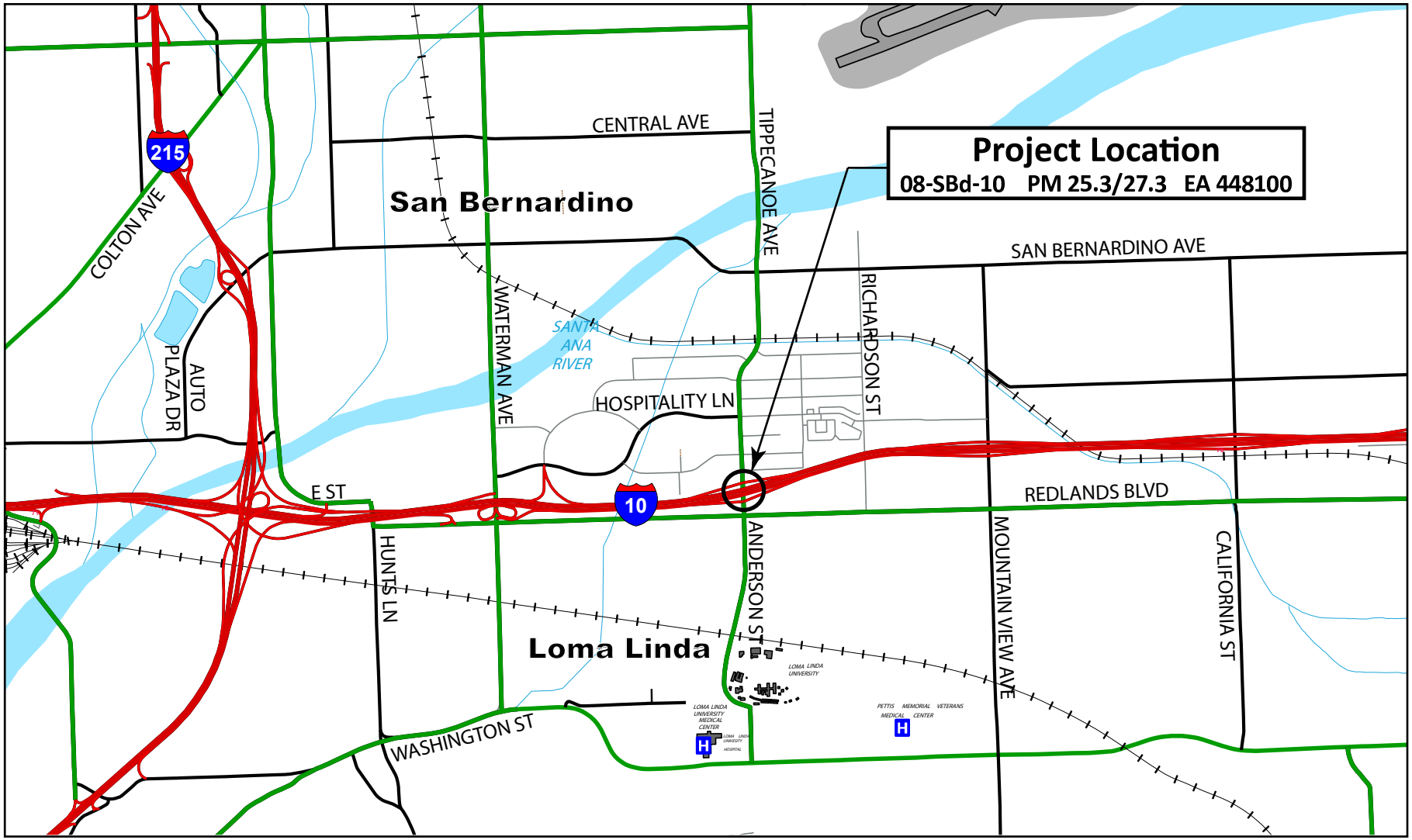

N

No Scale

Attachment A
Project Location Map

ATTACHMENT B

Category Determination Request Letter

State of California
DEPARTMENT OF TRANSPORTATION

Business, Transportation and Housing Agency

Memorandum

Flex your power!
Be energy efficient!

To: **LUIS BETANCOURT**
Deputy District Director
Design, MS 1267

Date: July 21, 2008

File: 08-SBd-10-KP 40.8/43.8
(PM 25.3/27.3)
Modify, Improve and
Reconfigure I-10 Interchange
At Anderson St./Tippecanoe
Ave.
08250-448100

From: JON BUMPS
Office Chief
Design H, MS 1164

Subject: **Project Category Assignment**

Approval is requested for assignment of the above-referenced projects to Category 3, in accordance with requirements in Chapter 8, Section 5 of the Project Development Procedures Manual.

The project proposes to modify, improve and reconfigure the existing I-10 Interchange in order to reduce the projected ramp volumes on the adjacent interchanges, reduce the local street congestion and accommodate the projected growth in the area.

This project requires right-of-way acquisition and utility relocation.

Approved by

for 7/21/08

LUIS BETANCOURT Date
Deputy District Director
Design

c: ALiao, Project Manager, MS 1229
File

Jim Sun / js

ATTACHMENT C

Approved PSR (Cover)

FILE 1016.1.10

08-SBd-10-KP 40.7/43.9 (PM 25.3/27.2)
EA 44810K
AUGUST, 2002

Caltrans Metric

PROJECT STUDY REPORT
(Project Development Support)

This document can be used to program only the Engineering and Environmental Support for Project Approval and Environmental Document component. The remaining support and capital components of the project are preliminary estimates and are not suitable for programming purposes. Either a Supplemental PSR or a Project Report will serve as the programming document for the remaining support and capital components of the project.

Vicinity Map

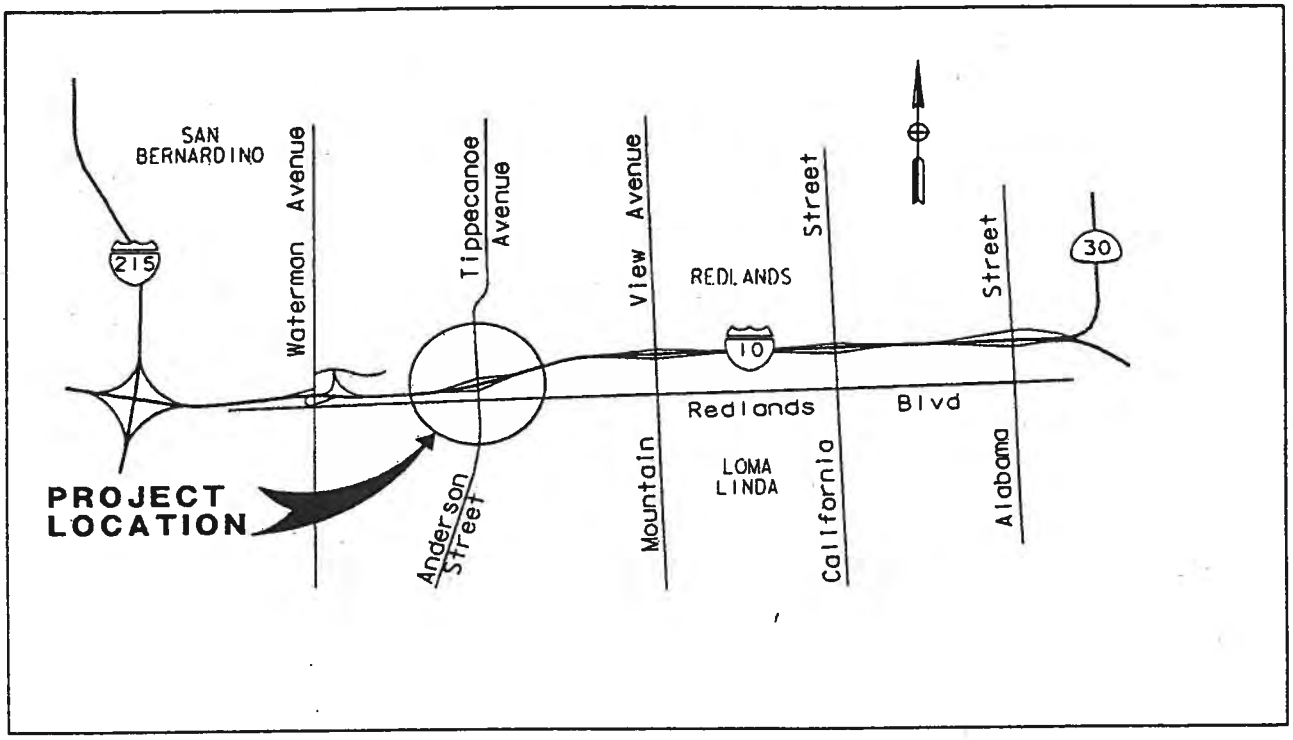

ON INTERSTATE 10 AT TIPPECANOE AVENUE AND ON TIPPECANOE AVENUE/ANDERSON STREET BETWEEN SAN TIMOTEO CREEK AND LAURELWOOD DRIVE IN SAN BERNARDINO COUNTY

SUBMITTED BY: _____ 13 Aug '02
Greg Hefter — Date
San Bernardino Associated Governments

APPROVAL RECOMMENDED BY: _____ 8/22/02
Phillip W. Reynolds — Date
Project Manager

APPROVED: _____ 8/27/02
Anne Mayer — Date
District Director

J:\2432\0001\PSR(PDS)\7-26-02\COV&CERT_rev072602 08/07/02

ATTACHMENT D

Geometric Drawings

Dist	COUNTY	ROUTE	POST MILES TOTAL PROJECT	SHEET No.	TOTAL SHEETS
08	SBd	10	25.3/27.3		

REGISTERED CIVIL ENGINEER DATE

PLANS APPROVAL DATE

REGISTERED PROFESSIONAL ENGINEER No. Exp. CIVIL STATE OF CALIFORNIA

THE STATE OF CALIFORNIA OR ITS OFFICERS OR AGENTS SHALL NOT BE RESPONSIBLE FOR THE ACCURACY OR COMPLETENESS OF SCANNED COPIES OF THIS PLAN SHEET.

SANBAG
1170 W. 3rd Street
2nd Floor
San Bernardino, CA 92410

RMC, INC.
6 Hutton Centre Drive
Suite 1250
Santa Ana, CA 92707

NOTES:

1. DIMENSIONS OF THE STRUCTURAL SECTIONS ARE SUBJECT TO TOLERANCES SPECIFIED IN THE STANDARD SPECIFICATIONS.
2. SUPERELEVATION AS SHOWN OR AS DIRECTED BY THE ENGINEER.
3. SEE BRIDGE PLANS FOR BRIDGE DETAILS.
4. FOR LOCATIONS AND TYPE OF AC DIKE SEE LAYOUT SHEETS.
5. FOR LOCATIONS OF COLD PLANE AC PAVEMENT, SEE LAYOUT SHEETS.
6. SEE WALL PLANS FOR WALL DETAILS.
7. FOR LOCATIONS OF CONCRETE BARRIER SEE LAYOUT SHEETS.
8. FOR LOCATIONS OF MEDIAN SEE LAYOUT AND CONSTRUCTION DETAIL SHEETS.

ROUTE 10
DESIGN DESIGNATION

EXISTING ADT	FUTURE ADT	DHV	ESAL	D	T	V	TI
207,800	297,700	21,000	223,100,000	56%	7%	80 mph	17.0

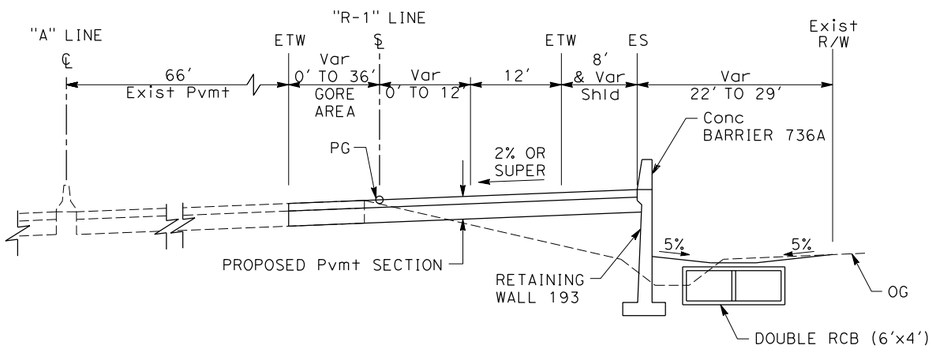

EB ROUTE 10
AND EB OFF-RAMP

"A" Sta 211+29 TO Sta 215+38.23

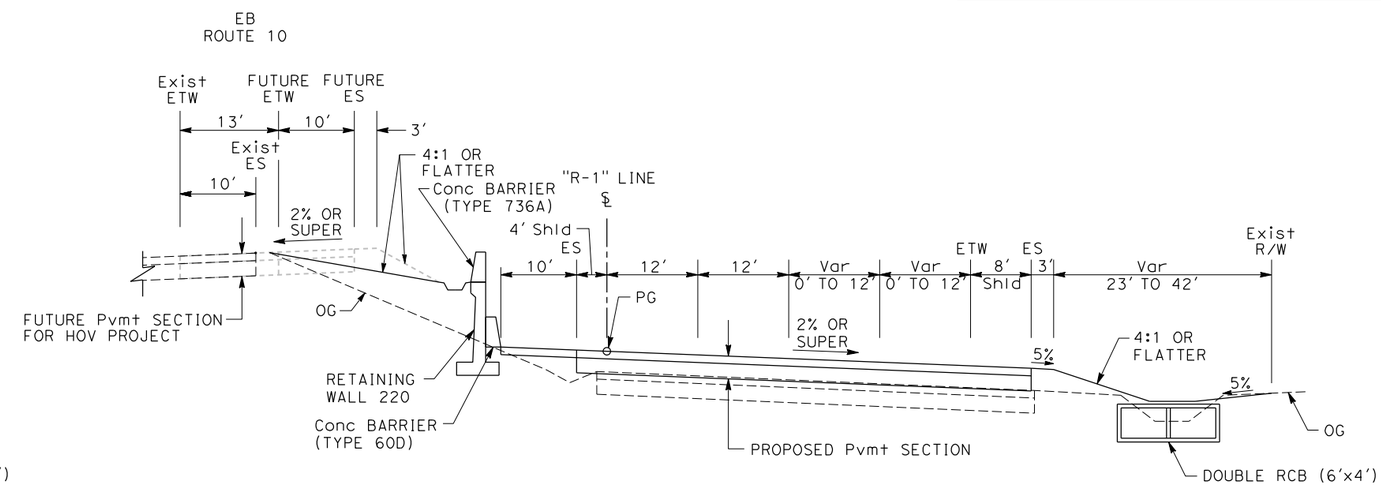

EB OFF-RAMP

"R-1" Sta 20+80 TO Sta 28+25

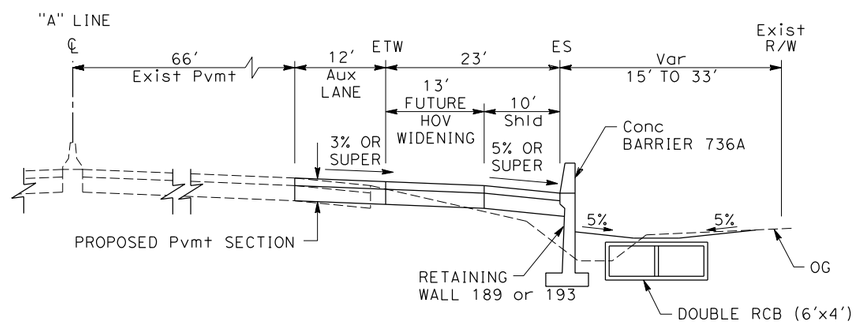

EB ROUTE 10

"A" Sta 189+60 TO Sta 211+29

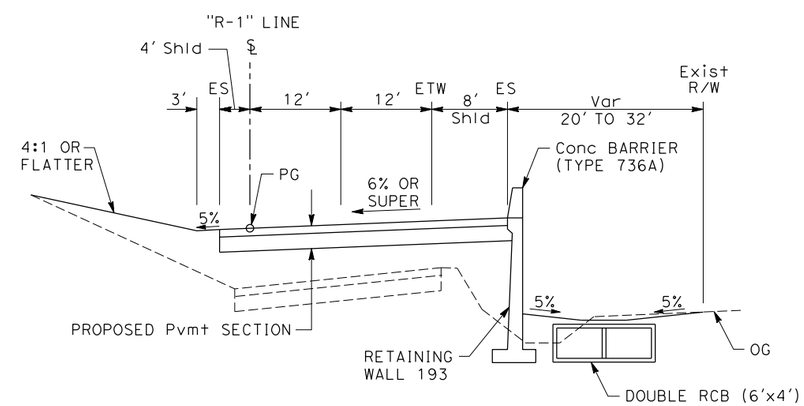

EB OFF-RAMP

"R-1" Sta 15+41.29 TO Sta 20+80

TYPICAL CROSS SECTION

NO SCALE

X- 1

REVISED BY | DATE REVISED | CALCULATED-DESIGNED BY | CHECKED BY | CONSULTANT FUNCTIONAL SUPERVISOR

STATE OF CALIFORNIA - DEPARTMENT OF TRANSPORTATION

Caltrans

LAST REVISION 00-00-00 | DATE PLOTTED => 10/12/2009 | TIME PLOTTED => 10:30:30 AM

Dist	COUNTY	ROUTE	POST MILES TOTAL PROJECT	SHEET No.	TOTAL SHEETS
08	SBd	10	25.3/27.3		

REGISTERED CIVIL ENGINEER DATE

PLANS APPROVAL DATE

REGISTERED PROFESSIONAL ENGINEER No. Exp. CIVIL STATE OF CALIFORNIA

THE STATE OF CALIFORNIA OR ITS OFFICERS OR AGENTS SHALL NOT BE RESPONSIBLE FOR THE ACCURACY OR COMPLETENESS OF SCANNED COPIES OF THIS PLAN SHEET.

SANBAG
1170 W. 3rd Street
2nd Floor
San Bernardino, CA 92410

RMC, INC.
6 Hutton Centre Drive
Suite 1250
Santa Ana, CA 92707

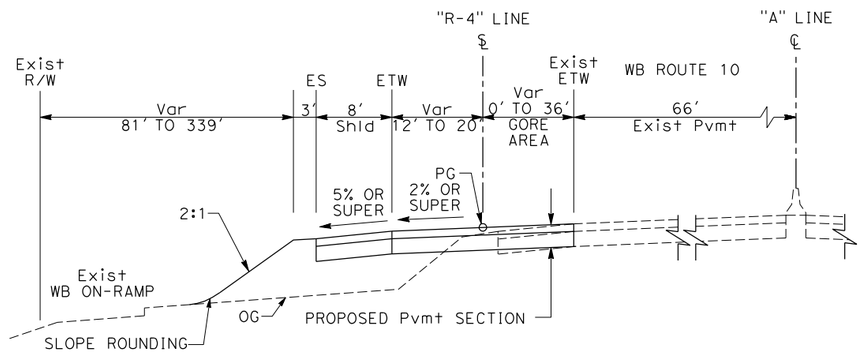

WB ROUTE 10 AND WB LOOP ON-RAMP

"A" Sta 220+40 TO Sta 231+09

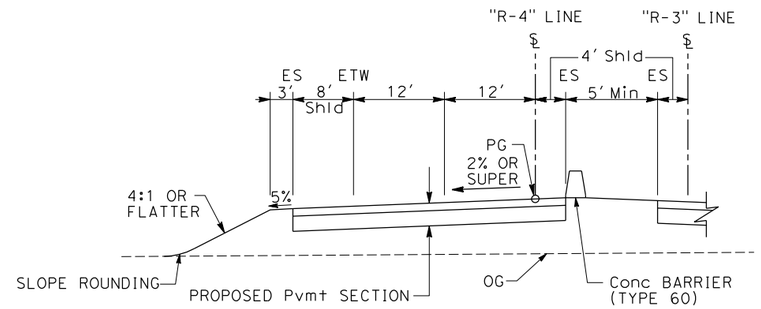

WB LOOP ON-RAMP

"R-4" Sta 37+00 TO Sta 41+25

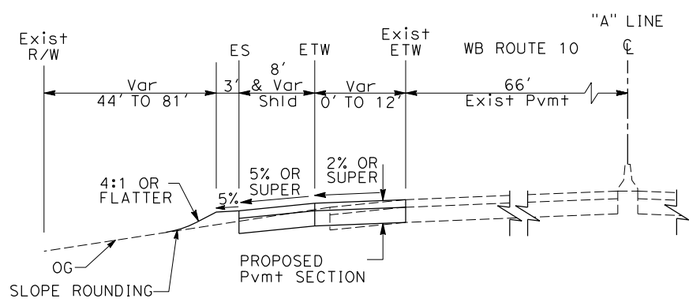

WB ROUTE 10

"A" Sta 214+37.93 TO Sta 220+40

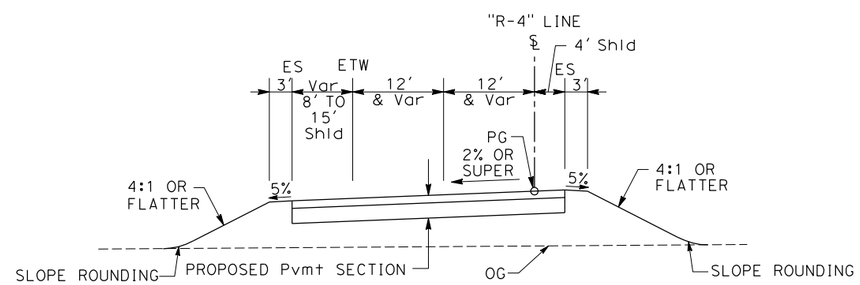

WB LOOP ON-RAMP

"R-4" Sta 32+16 TO Sta 37+00

TYPICAL CROSS SECTION

NO SCALE

X- 2

REVISED BY | DATE REVISED

CALCULATED-DESIGNED BY | CHECKED BY

CONSULTANT FUNCTIONAL SUPERVISOR

STATE OF CALIFORNIA - DEPARTMENT OF TRANSPORTATION

Caltrans

LAST REVISION 00-00-00 | DATE PLOTTED => 9/4/2009 | TIME PLOTTED => 11:47:50 AM

Dist	COUNTY	ROUTE	POST MILES TOTAL PROJECT	SHEET No.	TOTAL SHEETS
08	SBd	10	25.3/27.3		

REGISTERED CIVIL ENGINEER DATE

PLANS APPROVAL DATE

REGISTERED PROFESSIONAL ENGINEER No. Exp. CIVIL STATE OF CALIFORNIA

THE STATE OF CALIFORNIA OR ITS OFFICERS OR AGENTS SHALL NOT BE RESPONSIBLE FOR THE ACCURACY OR COMPLETENESS OF SCANNED COPIES OF THIS PLAN SHEET.

SANBAG
1170 W. 3rd Street
2nd Floor
San Bernardino, CA 92410

RMC, INC.
6 Hutton Centre Drive
Suite 1250
Santa Ana, CA 92707

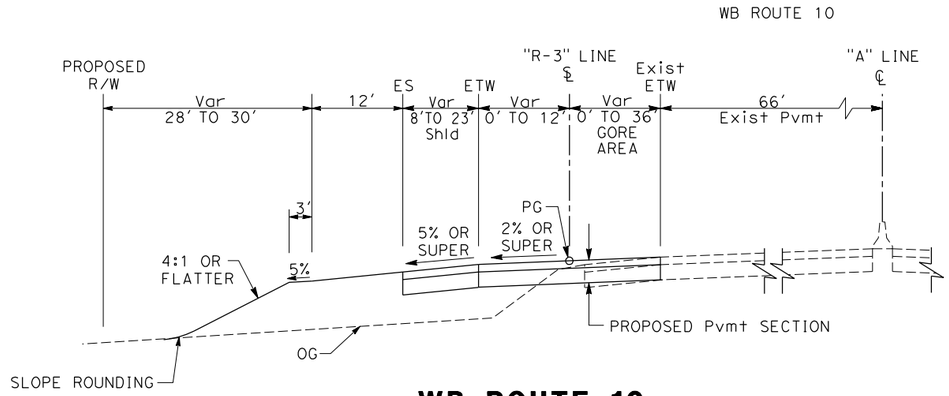

WB ROUTE 10 AND WB OFF-RAMP

"A" Sta 245+40 TO Sta 250+60

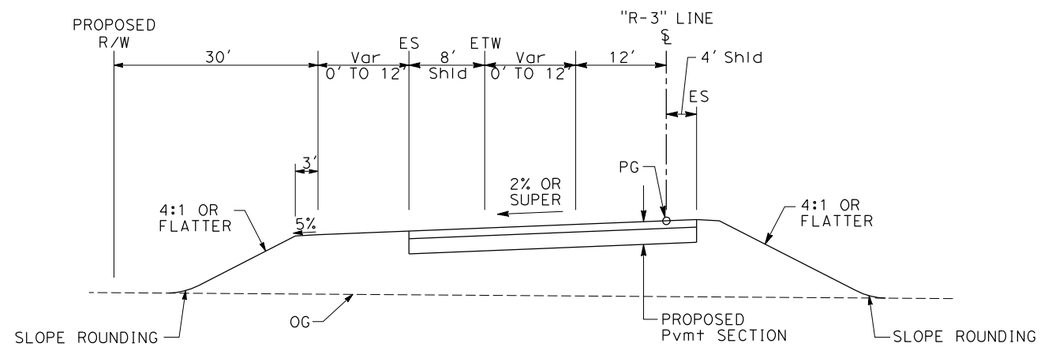

WB OFF-RAMP

"R-3" Sta 34+00 TO Sta 45+39

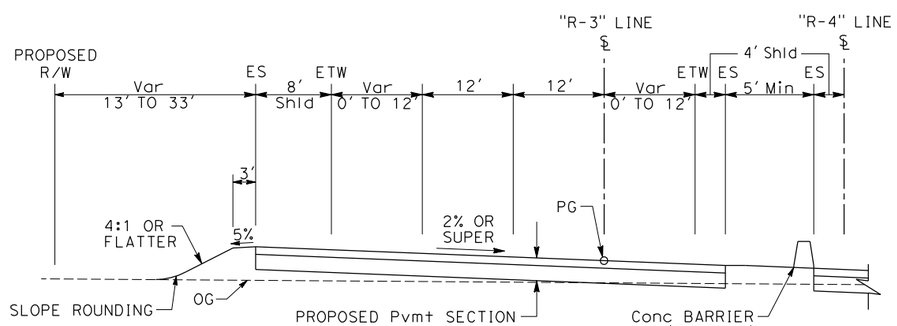

WB OFF-RAMP

"R-3" Sta 29+68 TO Sta 34+00

TYPICAL CROSS SECTION

NO SCALE

X-3

REVISED BY | DATE REVISED

CALCULATED-DESIGNED BY | CHECKED BY

CONSULTANT FUNCTIONAL SUPERVISOR

STATE OF CALIFORNIA - DEPARTMENT OF TRANSPORTATION

Caltrans

LAST REVISION 00-00-00 | DATE PLOTTED => 9/4/2009 | TIME PLOTTED => 11:48:04 AM

Dist	COUNTY	ROUTE	POST MILES TOTAL PROJECT	SHEET No.	TOTAL SHEETS
08	SBd	10	25.3/27.3		

REGISTERED CIVIL ENGINEER DATE

PLANS APPROVAL DATE

REGISTERED PROFESSIONAL ENGINEER No. Exp. CIVIL STATE OF CALIFORNIA

THE STATE OF CALIFORNIA OR ITS OFFICERS OR AGENTS SHALL NOT BE RESPONSIBLE FOR THE ACCURACY OR COMPLETENESS OF SCANNED COPIES OF THIS PLAN SHEET.

SANBAG
1170 W. 3rd Street
2nd Floor
San Bernardino, CA 92410

RMC, INC.
6 Hutton Centre Drive
Suite 1250
Santa Ana, CA 92707

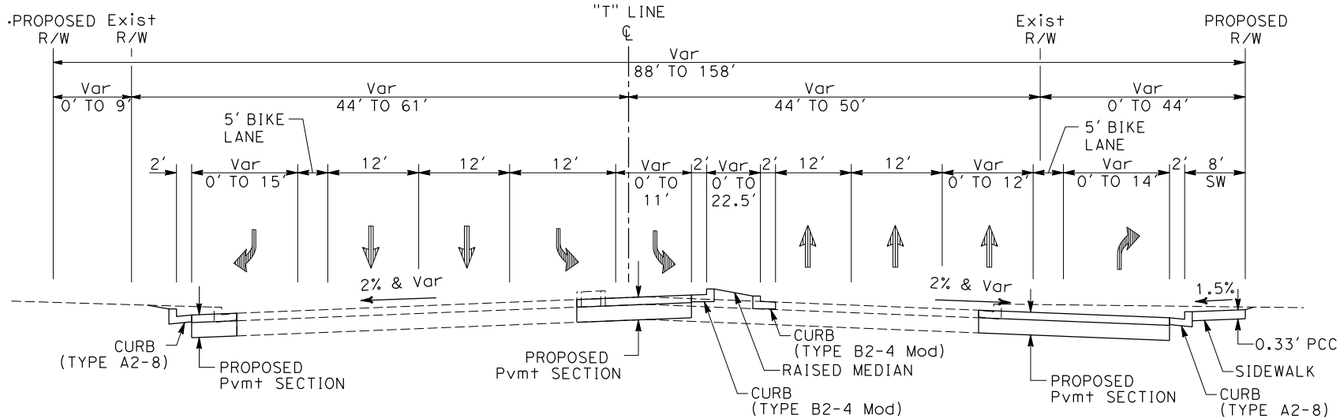

TIPPECANOE AVENUE

"T" Sta 229+65 TO Sta 232+80

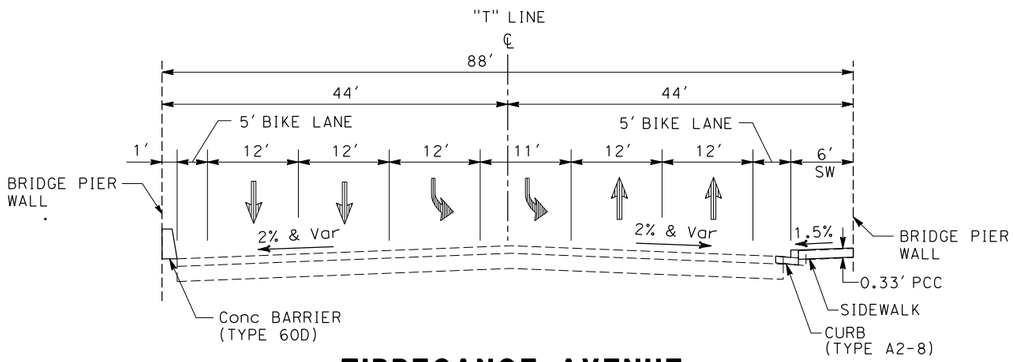

TIPPECANOE AVENUE

"T" Sta 227+10 TO Sta 229+65

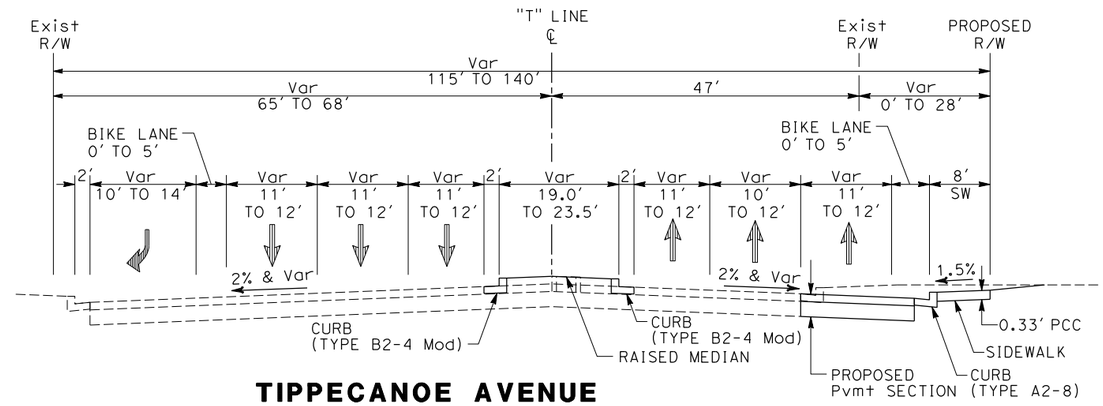

TIPPECANOE AVENUE

"T" Sta 237+35 TO Sta 241+50

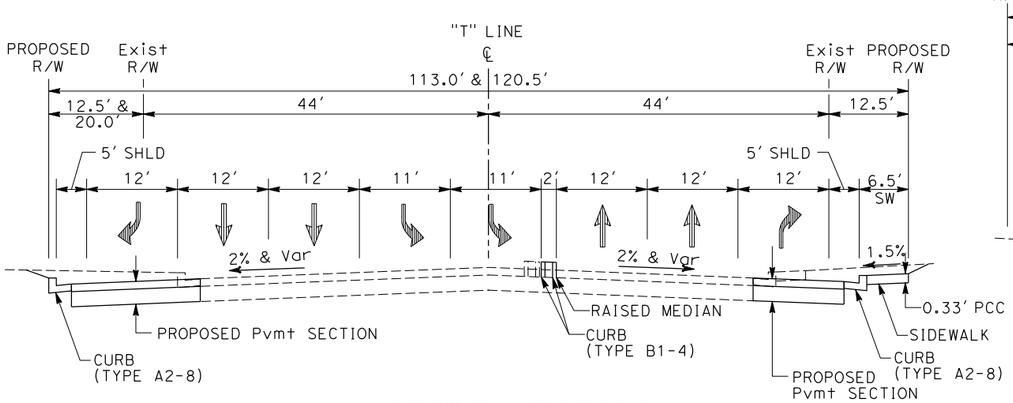

ANDERSON STREET

"T" Sta 224+00 TO Sta 226+25

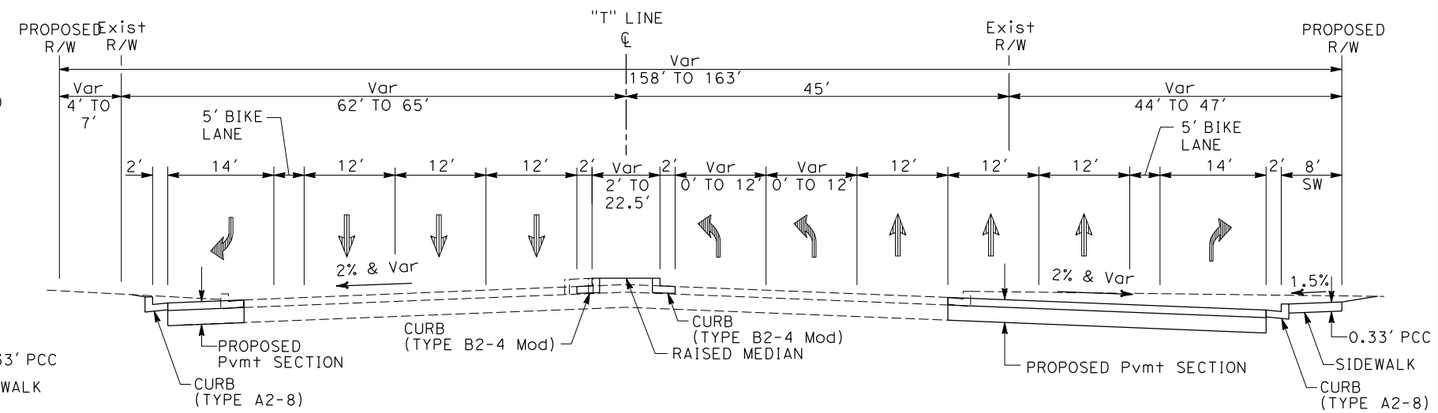

TIPPECANOE AVENUE

"T" Sta 232+80 TO Sta 235+90

TYPICAL CROSS SECTION

NO SCALE

X- 4

REVISED BY | DATE REVISED | CALCULATED-DESIGNED BY | CHECKED BY | CONSULTANT FUNCTIONAL SUPERVISOR

STATE OF CALIFORNIA - DEPARTMENT OF TRANSPORTATION

Caltrans

LAST REVISION 00-00-00 | DATE PLOTTED => 9/4/2009 | TIME PLOTTED => 11:48:19 AM

Dist	COUNTY	ROUTE	POST MILES TOTAL PROJECT	SHEET No.	TOTAL SHEETS
08	SBd	10	25.3/27.3		

REGISTERED CIVIL ENGINEER DATE

PLANS APPROVAL DATE

REGISTERED PROFESSIONAL ENGINEER No. Exp. CIVIL STATE OF CALIFORNIA

THE STATE OF CALIFORNIA OR ITS OFFICERS OR AGENTS SHALL NOT BE RESPONSIBLE FOR THE ACCURACY OR COMPLETENESS OF SCANNED COPIES OF THIS PLAN SHEET.

SANBAG
1170 W. 3rd Street
2nd Floor
San Bernardino, CA 92410

RMC, INC.
6 Hutton Centre Drive
Suite 1250
Santa Ana, CA 92707

NOTE: FOR COMPLETE RIGHT OF WAY AND ACCURATE ACCESS DATA, SEE RIGHT OF WAY RECORD MAPS AT DISTRICT OFFICE.

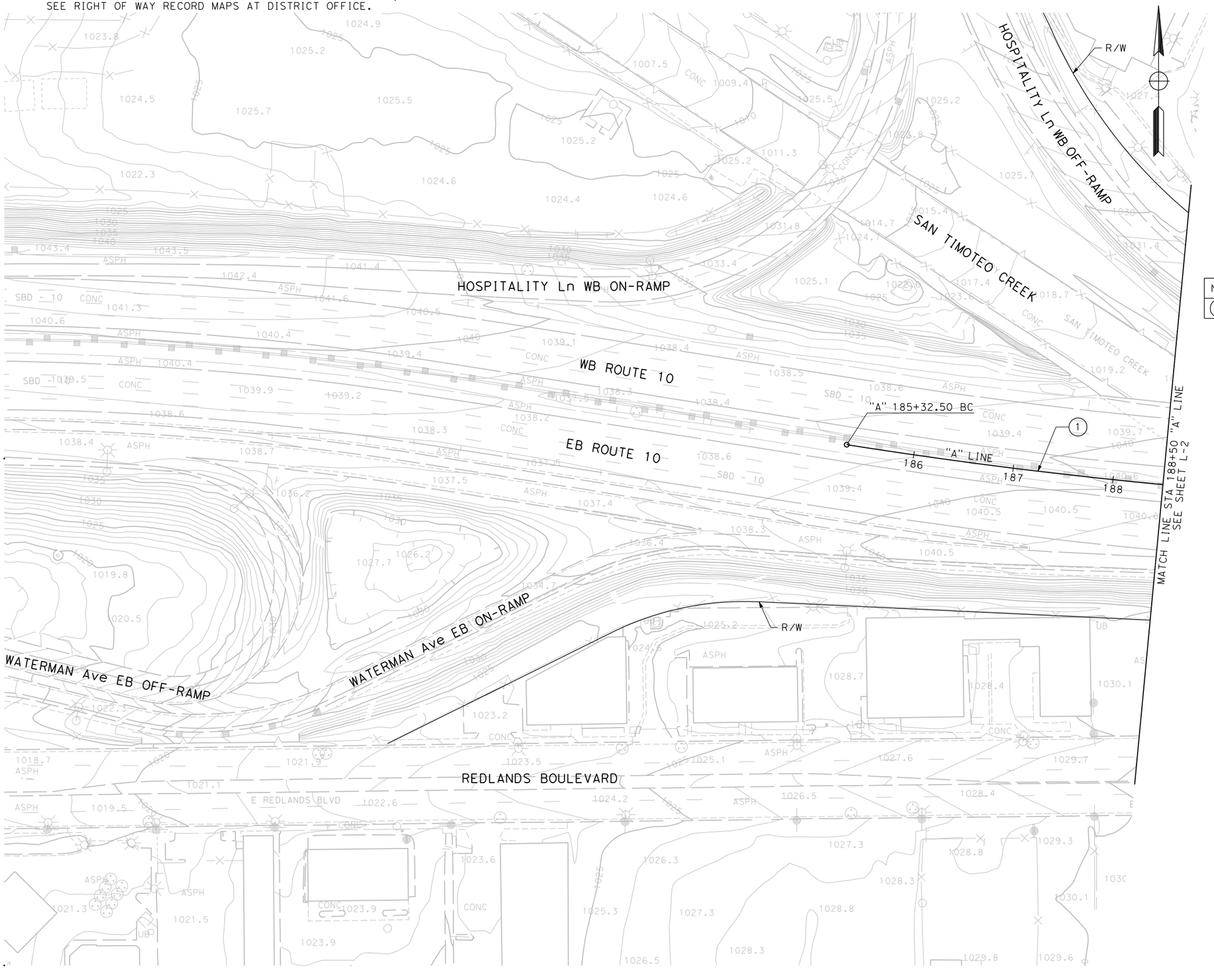

CURVE DATA

No.	R	Δ	T	L
1	4999.96′	9°40′26″	423.11′	844.20′

LAYOUT
SCALE 1" = 50′

L- 1

STATE OF CALIFORNIA - DEPARTMENT OF TRANSPORTATION

Caltrans

CONSULTANT FUNCTIONAL SUPERVISOR

CALCULATED-DESIGNED BY

CHECKED BY

REVISED BY

DATE REVISED

LAST REVISION 00-00-00

DATE PLOTTED => 9/4/2009
TIME PLOTTED => 12:00:18 PM

Dist	COUNTY	ROUTE	POST MILES TOTAL PROJECT	SHEET No.	TOTAL SHEETS
08	SBd	10	25.3/27.3		

REGISTERED CIVIL ENGINEER DATE

PLANS APPROVAL DATE

REGISTERED PROFESSIONAL ENGINEER No. Exp. CIVIL STATE OF CALIFORNIA

THE STATE OF CALIFORNIA OR ITS OFFICERS OR AGENTS SHALL NOT BE RESPONSIBLE FOR THE ACCURACY OR COMPLETENESS OF SCANNED COPIES OF THIS PLAN SHEET.

SANBAG
1170 W. 3rd Street
2nd Floor
San Bernardino, CA 92410

RMC, INC.
6 Hutton Centre Drive
Suite 1250
Santa Ana, CA 92707

NOTE: FOR COMPLETE RIGHT OF WAY AND ACCURATE ACCESS DATA, SEE RIGHT OF WAY RECORD MAPS AT DISTRICT OFFICE.

CURVE DATA

No.	R	Δ	T	L
1	4999.96′	9°40′26"	423.11′	844.20′

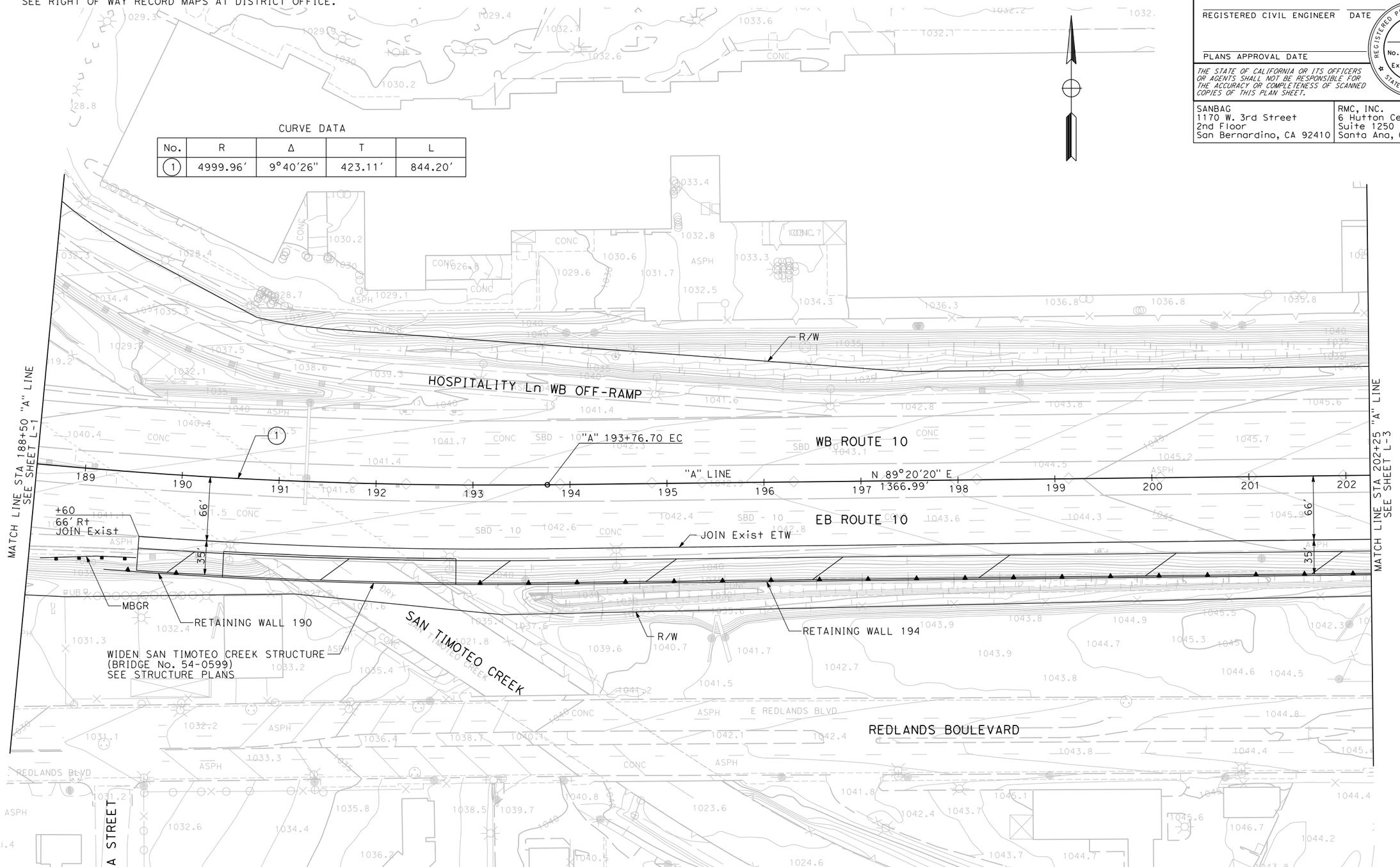

LAYOUT

SCALE 1" = 50′

L- 2

STATE OF CALIFORNIA - DEPARTMENT OF TRANSPORTATION

Caltrans

CONSULTANT FUNCTIONAL SUPERVISOR

CALCULATED-DESIGNED BY

CHECKED BY

REVISED BY

DATE REVISED

LAST REVISION 00-00-00

DATE PLOTTED => 9/4/2009
TIME PLOTTED => 12:00:52 PM

BORDER LAST REVISED 4/11/2008

RELATIVE BORDER SCALE IS IN INCHES 0 1 2 3

USERNAME => $(USER)
DGN FILE => ...\Plan Set\08448100ea02.dgn

CU 08250

EA 448100

Dist	COUNTY	ROUTE	POST MILES TOTAL PROJECT	SHEET No.	TOTAL SHEETS
08	SBd	10	25.3/27.3		

REGISTERED CIVIL ENGINEER DATE

PLANS APPROVAL DATE

REGISTERED PROFESSIONAL ENGINEER No. Exp. CIVIL STATE OF CALIFORNIA

THE STATE OF CALIFORNIA OR ITS OFFICERS OR AGENTS SHALL NOT BE RESPONSIBLE FOR THE ACCURACY OR COMPLETENESS OF SCANNED COPIES OF THIS PLAN SHEET.

SANBAG
1170 W. 3rd Street
2nd Floor
San Bernardino, CA 92410

RMC, INC.
6 Hutton Centre Drive
Suite 1250
Santa Ana, CA 92707

NOTE: FOR COMPLETE RIGHT OF WAY AND ACCURATE ACCESS DATA, SEE RIGHT OF WAY RECORD MAPS AT DISTRICT OFFICE.

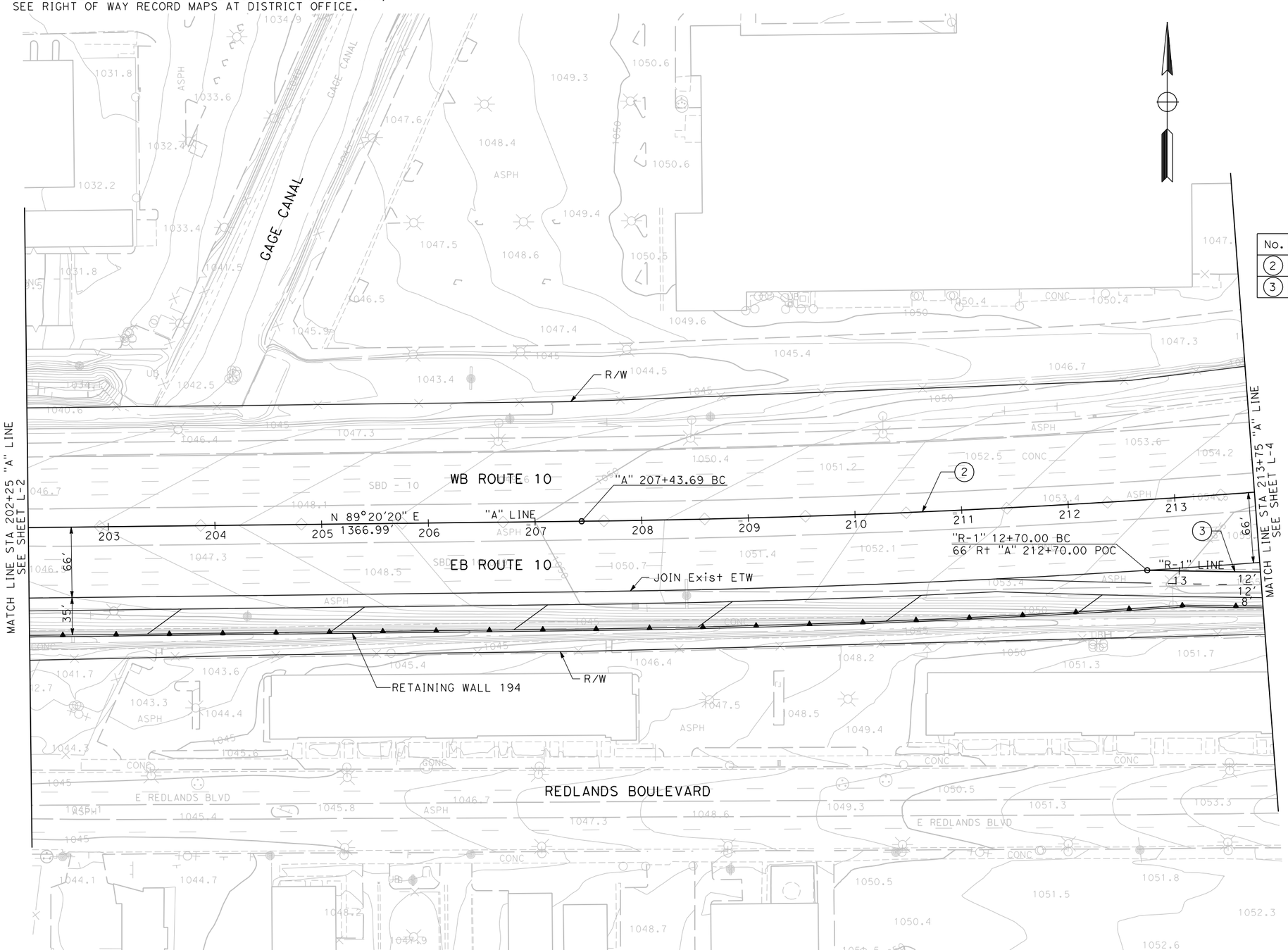

CURVE DATA

No.	R	Δ	T	L
2	9999.95'	15°08'10"	1328.60'	2641.72'
3	10066.00'	2°55'31"	257.01'	513.91'

LAYOUT

SCALE 1" = 50'

L- 3

REVISED BY | DATE REVISED

CALCULATED-DESIGNED BY | CHECKED BY

CONSULTANT FUNCTIONAL SUPERVISOR

STATE OF CALIFORNIA - DEPARTMENT OF TRANSPORTATION

Caltrans

LAST REVISION 00-00-00 | DATE PLOTTED => 9/4/2009 | TIME PLOTTED => 12:01:08 PM

Dist	COUNTY	ROUTE	POST MILES TOTAL PROJECT	SHEET No.	TOTAL SHEETS
08	SBd	10	25.3/27.3		

REGISTERED CIVIL ENGINEER DATE

PLANS APPROVAL DATE

REGISTERED PROFESSIONAL ENGINEER No. Exp. CIVIL STATE OF CALIFORNIA

THE STATE OF CALIFORNIA OR ITS OFFICERS OR AGENTS SHALL NOT BE RESPONSIBLE FOR THE ACCURACY OR COMPLETENESS OF SCANNED COPIES OF THIS PLAN SHEET.

SANBAG
1170 W. 3rd Street
2nd Floor
San Bernardino, CA 92410

RMC, INC.
6 Hutton Centre Drive
Suite 1250
Santa Ana, CA 92707

NOTE: FOR COMPLETE RIGHT OF WAY AND ACCURATE ACCESS DATA, SEE RIGHT OF WAY RECORD MAPS AT DISTRICT OFFICE.

CURVE DATA

No.	R	Δ	T	L
2	9999.95′	15°08′10″	1328.60′	2641.72′
3	10066.00′	2°55′31″	257.01′	513.91′
4	2000.00′	8°04′11″	141.08′	281.69′
5	4000.00′	2°12′05″	76.86′	153.69′
6	9921.27′	5°26′46″	471.87′	943.02′

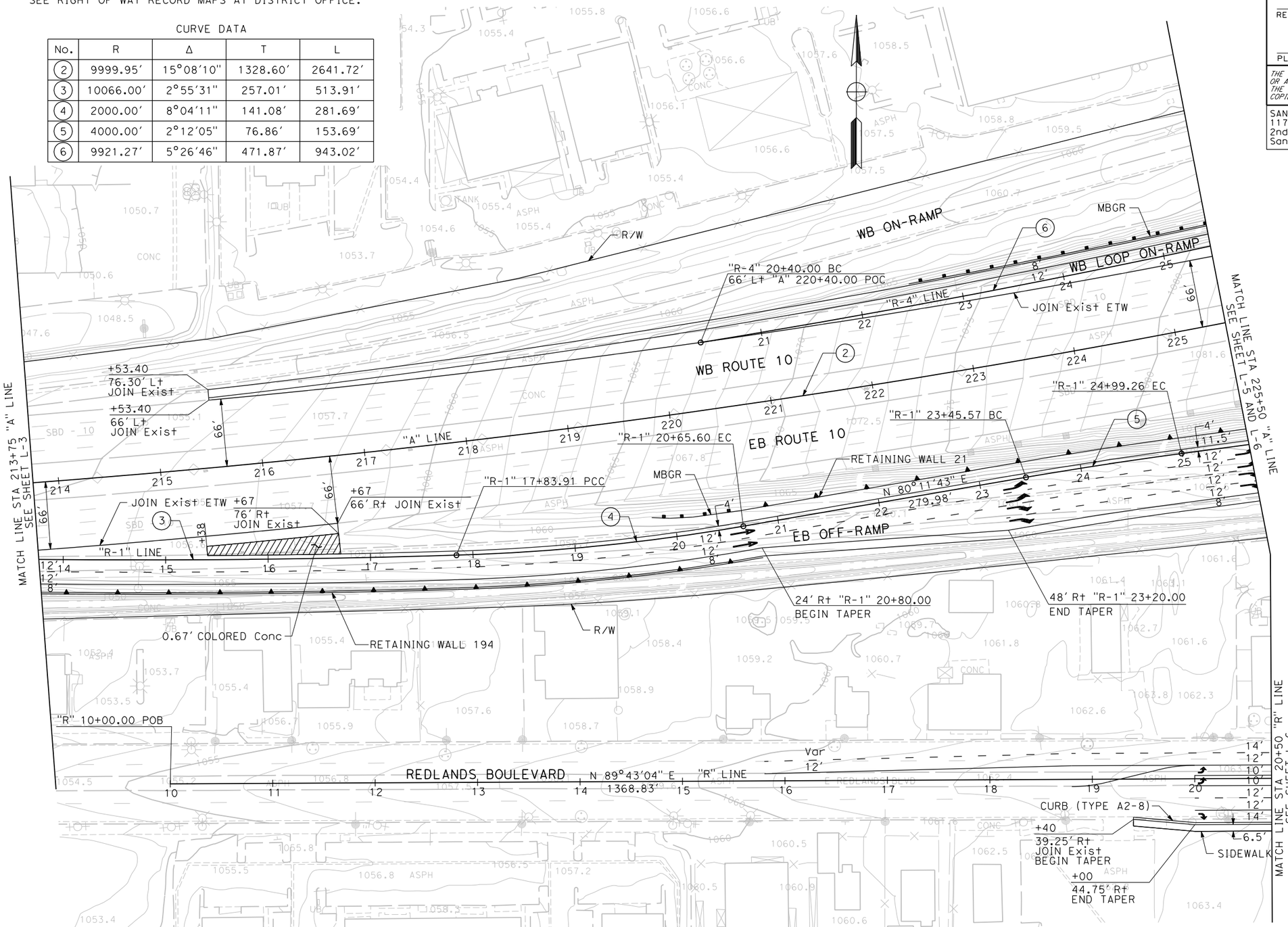

LAYOUT

SCALE 1" = 50′

L- 4

STATE OF CALIFORNIA - DEPARTMENT OF TRANSPORTATION

Caltrans

CONSULTANT FUNCTIONAL SUPERVISOR

CALCULATED-DESIGNED BY

CHECKED BY

REVISED BY

DATE REVISED

LAST REVISION 00-00-00

DATE PLOTTED => 9/4/2009
TIME PLOTTED => 12:01:25 PM

BORDER LAST REVISED 4/11/2008

RELATIVE BORDER SCALE IS IN INCHES 0 1 2 3

USERNAME => $(USER)
DGN FILE => ...\Plan Set\08448100ea04.dgn

CU 08250

EA 448100

Dist	COUNTY	ROUTE	POST MILES TOTAL PROJECT	SHEET No.	TOTAL SHEETS
08	SBd	10	25.3/27.3		

REGISTERED CIVIL ENGINEER DATE

PLANS APPROVAL DATE

REGISTERED PROFESSIONAL ENGINEER No. Exp. CIVIL STATE OF CALIFORNIA

THE STATE OF CALIFORNIA OR ITS OFFICERS OR AGENTS SHALL NOT BE RESPONSIBLE FOR THE ACCURACY OR COMPLETENESS OF SCANNED COPIES OF THIS PLAN SHEET.

SANBAG
1170 W. 3rd Street
2nd Floor
San Bernardino, CA 92410

RMC, INC.
6 Hutton Centre Drive
Suite 1250
Santa Ana, CA 92707

NOTE: FOR COMPLETE RIGHT OF WAY AND ACCURATE ACCESS DATA, SEE RIGHT OF WAY RECORD MAPS AT DISTRICT OFFICE.

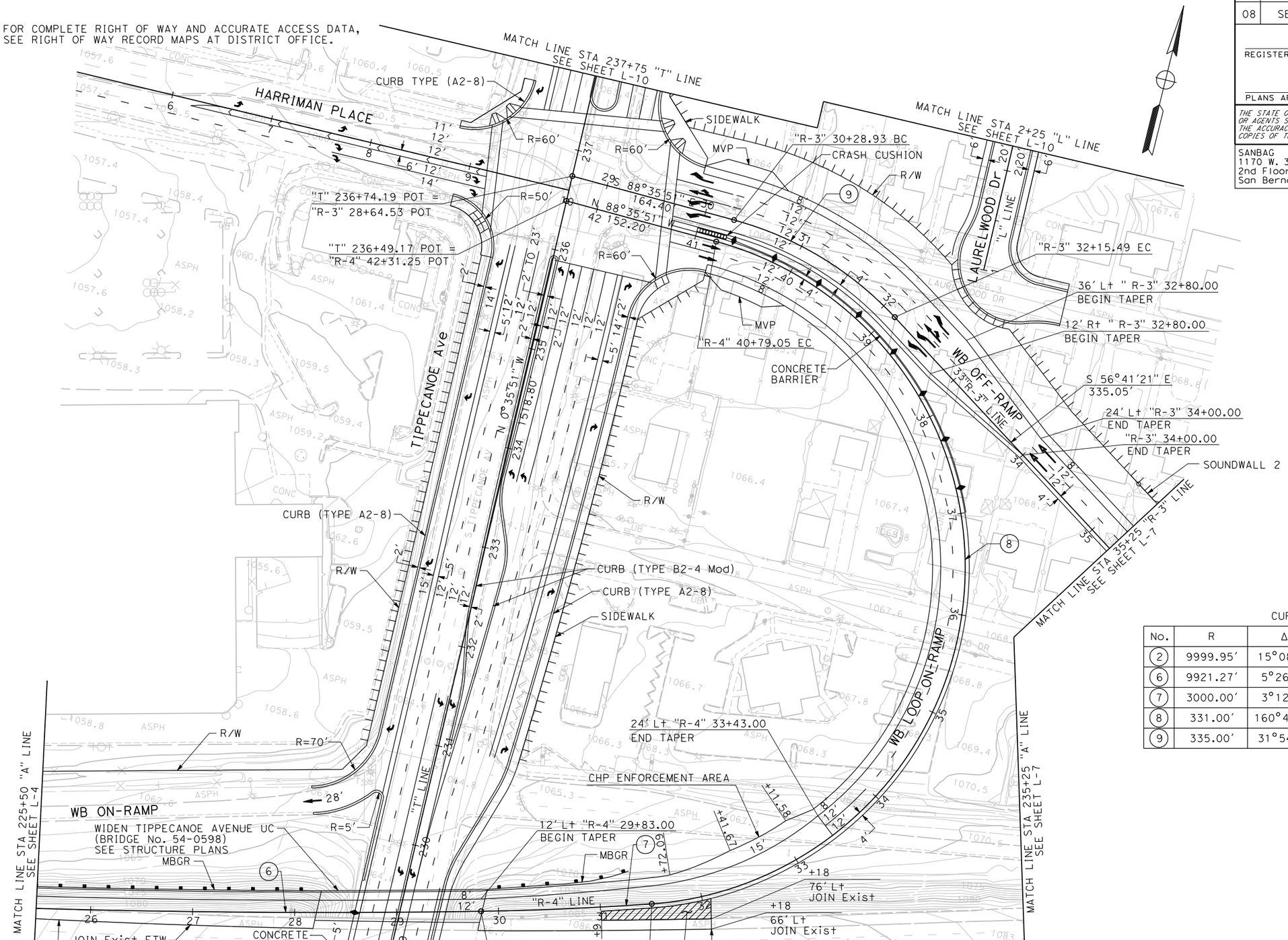

CURVE DATA

No.	R	Δ	T	L
2	9999.95′	15°08′10"	1328.60′	2641.72′
6	9921.27′	5°26′46"	471.87′	943.02′
7	3000.00′	3°12′03"	83.82′	167.60′
8	331.00′	160°42′36"	1947.68	928.43′
9	335.00′	31°54′30"	95.77′	186.56′

LAYOUT

SCALE 1" = 50′

L- 5

STATE OF CALIFORNIA - DEPARTMENT OF TRANSPORTATION

Caltrans

CONSULTANT FUNCTIONAL SUPERVISOR

CALCULATED-DESIGNED BY

CHECKED BY

REVISED BY

DATE REVISED

LAST REVISION 00-00-00

DATE PLOTTED => 9/4/2009
TIME PLOTTED => 12:46:06 PM

BORDER LAST REVISED 4/11/2008

RELATIVE BORDER SCALE IS IN INCHES 0 1 2 3

USERNAME => $(USER)
DGN FILE => ...\Plan Set\08448100ea05.dgn

CU 08250

EA 448100

Dist	COUNTY	ROUTE	POST MILES TOTAL PROJECT	SHEET No.	TOTAL SHEETS
08	SBd	10	25.3/27.3		

REGISTERED CIVIL ENGINEER DATE

PLANS APPROVAL DATE

REGISTERED PROFESSIONAL ENGINEER No. Exp. CIVIL STATE OF CALIFORNIA

THE STATE OF CALIFORNIA OR ITS OFFICERS OR AGENTS SHALL NOT BE RESPONSIBLE FOR THE ACCURACY OR COMPLETENESS OF SCANNED COPIES OF THIS PLAN SHEET.

SANBAG
1170 W. 3rd Street
2nd Floor
San Bernardino, CA 92410

RMC, INC.
6 Hutton Centre Drive
Suite 1250
Santa Ana, CA 92707

CURVE DATA

No.	R	Δ	T	L
2	9999.95′	15°08′10″	1328.60′	2641.72′

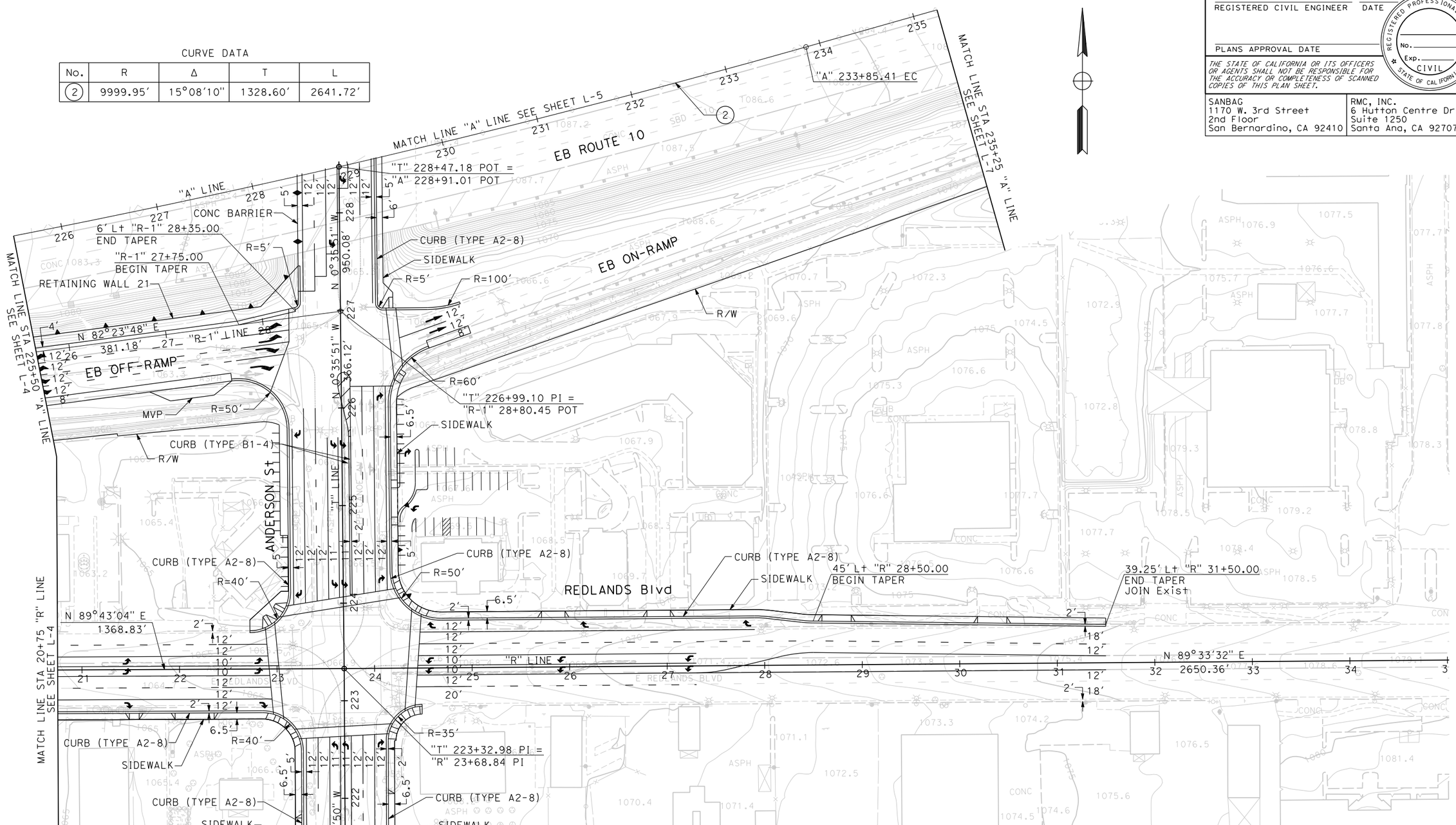

LAYOUT

SCALE 1" = 50′

L-6

STATE OF CALIFORNIA - DEPARTMENT OF TRANSPORTATION

Caltrans

CONSULTANT FUNCTIONAL SUPERVISOR

CALCULATED-DESIGNED BY

CHECKED BY

REVISED BY

DATE REVISED

LAST REVISION 00-00-00

DATE PLOTTED => 12/10/2010
TIME PLOTTED => 12:32:51 PM

BORDER LAST REVISED 4/11/2008

RELATIVE BORDER SCALE IS IN INCHES 0 1 2 3

USERNAME => $(USER)
DGN FILE => ...\08448100ea06-20101210.dgn

CU 08250

EA 448100

Dist	COUNTY	ROUTE	POST MILES TOTAL PROJECT	SHEET No.	TOTAL SHEETS
08	SBd	10	25.3/27.3		

REGISTERED CIVIL ENGINEER DATE

PLANS APPROVAL DATE

REGISTERED PROFESSIONAL ENGINEER No. Exp. CIVIL STATE OF CALIFORNIA

THE STATE OF CALIFORNIA OR ITS OFFICERS OR AGENTS SHALL NOT BE RESPONSIBLE FOR THE ACCURACY OR COMPLETENESS OF SCANNED COPIES OF THIS PLAN SHEET.

SANBAG
1170 W. 3rd Street
2nd Floor
San Bernardino, CA 92410

RMC, INC.
6 Hutton Centre Drive
Suite 1250
Santa Ana, CA 92707

NOTE: FOR COMPLETE RIGHT OF WAY AND ACCURATE ACCESS DATA, SEE RIGHT OF WAY RECORD MAPS AT DISTRICT OFFICE.

CURVE DATA

No.	R	Δ	T	L
10	850.00'	44°14'20"	345.49'	656.30'

LAYOUT

SCALE 1" = 50'

L- 7

REVISED BY | DATE REVISED

CALCULATED-DESIGNED BY | CHECKED BY

CONSULTANT FUNCTIONAL SUPERVISOR

STATE OF CALIFORNIA - DEPARTMENT OF TRANSPORTATION

Caltrans

LAST REVISION 00-00-00 | DATE PLOTTED => 9/4/2009 | TIME PLOTTED => 3:50:27 PM

Dist	COUNTY	ROUTE	POST MILES TOTAL PROJECT	SHEET No.	TOTAL SHEETS
08	SBd	10	25.3/27.3		

REGISTERED CIVIL ENGINEER DATE

PLANS APPROVAL DATE

REGISTERED PROFESSIONAL ENGINEER No. Exp. CIVIL STATE OF CALIFORNIA

THE STATE OF CALIFORNIA OR ITS OFFICERS OR AGENTS SHALL NOT BE RESPONSIBLE FOR THE ACCURACY OR COMPLETENESS OF SCANNED COPIES OF THIS PLAN SHEET.

SANBAG
1170 W. 3rd Street
2nd Floor
San Bernardino, CA 92410

RMC, INC.
6 Hutton Centre Drive
Suite 1250
Santa Ana, CA 92707

NOTE: FOR COMPLETE RIGHT OF WAY AND ACCURATE ACCESS DATA, SEE RIGHT OF WAY RECORD MAPS AT DISTRICT OFFICE.

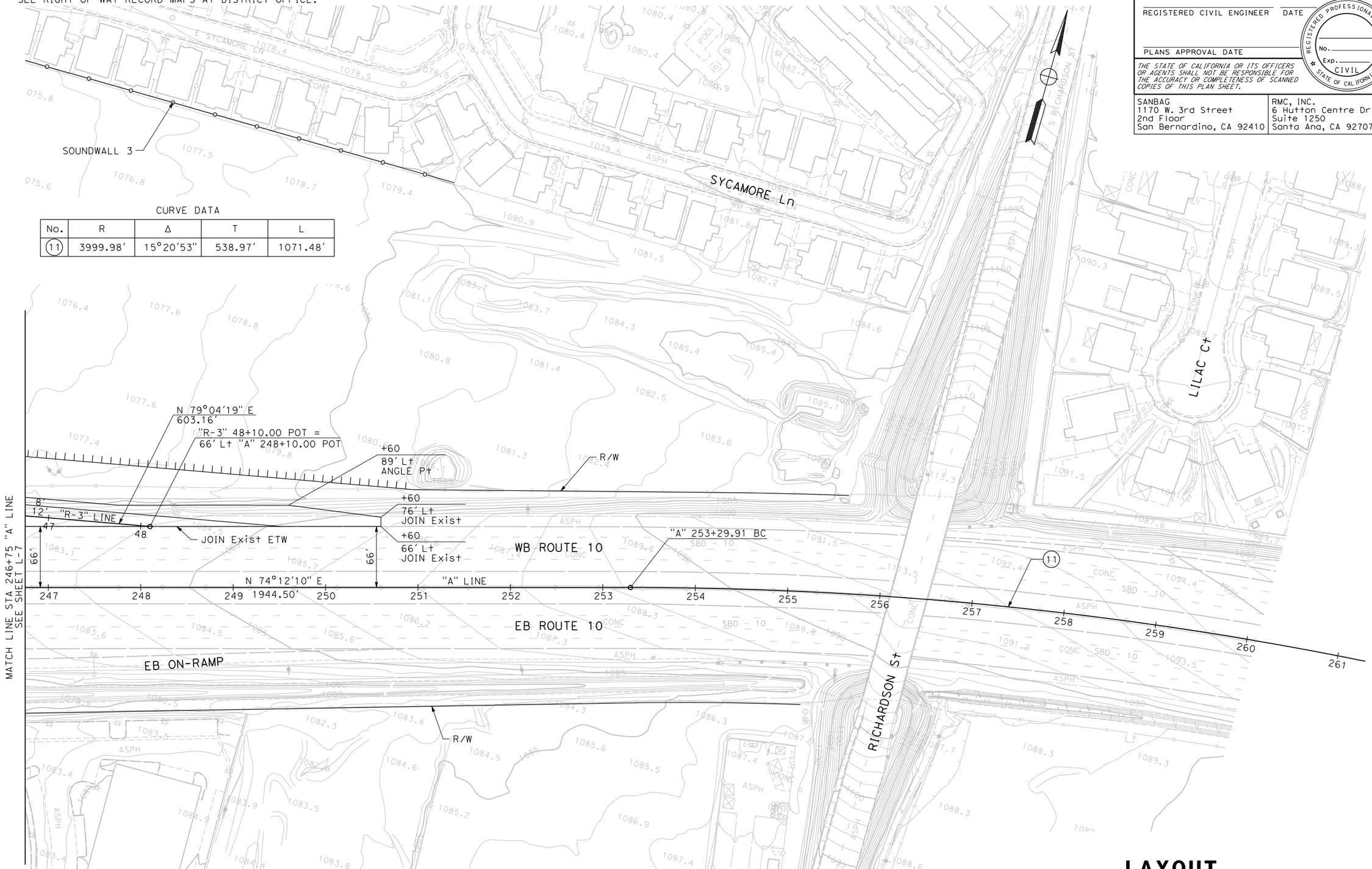

CURVE DATA

No.	R	Δ	T	L
11	3999.98′	15°20′53"	538.97′	1071.48′

LAYOUT
SCALE 1" = 50′

L- 8

STATE OF CALIFORNIA - DEPARTMENT OF TRANSPORTATION

Caltrans

CONSULTANT FUNCTIONAL SUPERVISOR

CALCULATED-DESIGNED BY

CHECKED BY

REVISED BY

DATE REVISED

LAST REVISION 00-00-00

DATE PLOTTED => 9/4/2009
TIME PLOTTED => 12:02:32 PM

Dist	COUNTY	ROUTE	POST MILES TOTAL PROJECT	SHEET No.	TOTAL SHEETS
08	SBd	10	25.3/27.3		

REGISTERED CIVIL ENGINEER DATE

PLANS APPROVAL DATE

REGISTERED PROFESSIONAL ENGINEER No. Exp. CIVIL STATE OF CALIFORNIA

THE STATE OF CALIFORNIA OR ITS OFFICERS OR AGENTS SHALL NOT BE RESPONSIBLE FOR THE ACCURACY OR COMPLETENESS OF SCANNED COPIES OF THIS PLAN SHEET.

SANBAG
1170 W. 3rd Street
2nd Floor
San Bernardino, CA 92410

RMC, INC.
6 Hutton Centre Drive
Suite 1250
Santa Ana, CA 92707

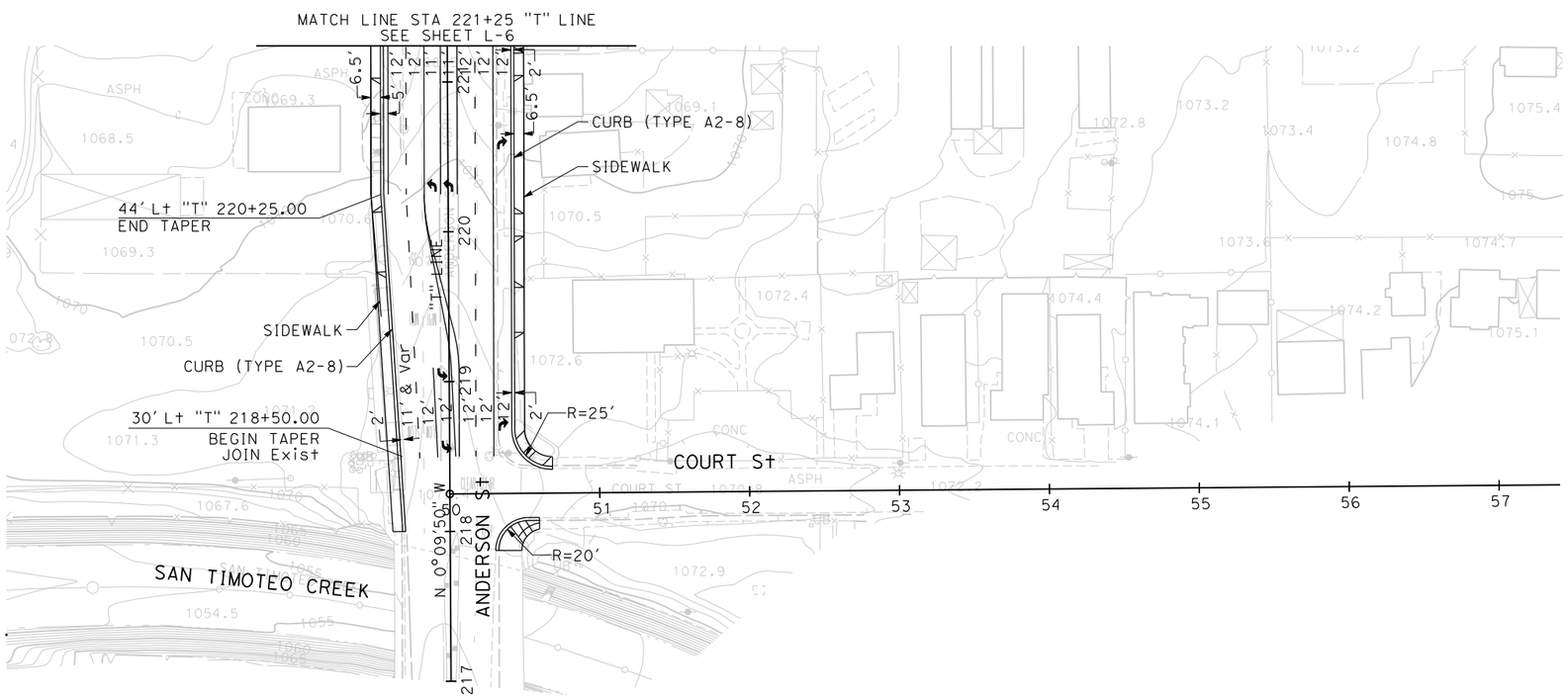

LAYOUT

SCALE 1" = 50'

L- 9

STATE OF CALIFORNIA - DEPARTMENT OF TRANSPORTATION

Caltrans

CONSULTANT FUNCTIONAL SUPERVISOR

CALCULATED-DESIGNED BY

CHECKED BY

REVISED BY

DATE REVISED

LAST REVISION 00-00-00

DATE PLOTTED => 12/10/2010
TIME PLOTTED => 12:33:19 PM

BORDER LAST REVISED 4/11/2008

RELATIVE BORDER SCALE IS IN INCHES 0 1 2 3

USERNAME => $(USER)
DGN FILE => ...\08448100ea09-20101210.dgn

CU 08250

EA 448100

Dist	COUNTY	ROUTE	POST MILES TOTAL PROJECT	SHEET No.	TOTAL SHEETS
08	SBd	10	25.3/27.3		

REGISTERED CIVIL ENGINEER DATE

PLANS APPROVAL DATE

REGISTERED PROFESSIONAL ENGINEER No. Exp. CIVIL STATE OF CALIFORNIA

THE STATE OF CALIFORNIA OR ITS OFFICERS OR AGENTS SHALL NOT BE RESPONSIBLE FOR THE ACCURACY OR COMPLETENESS OF SCANNED COPIES OF THIS PLAN SHEET.

SANBAG
1170 W. 3rd Street
2nd Floor
San Bernardino, CA 92410

RMC, INC.
6 Hutton Centre Drive
Suite 1250
Santa Ana, CA 92707

NOTE: FOR COMPLETE RIGHT OF WAY AND ACCURATE ACCESS DATA, SEE RIGHT OF WAY RECORD MAPS AT DISTRICT OFFICE.

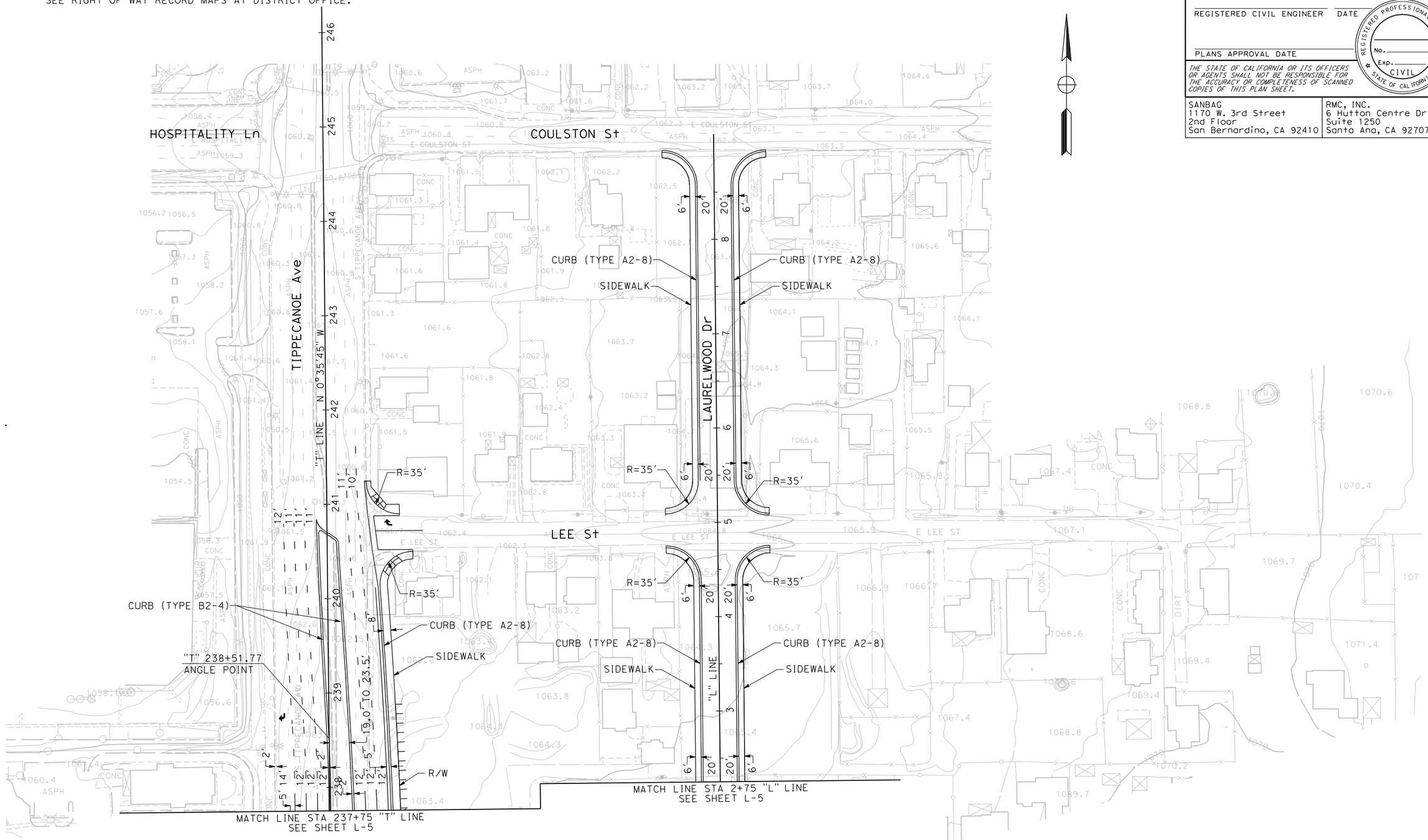

LAYOUT

SCALE 1" = 50'

L-10

STATE OF CALIFORNIA - DEPARTMENT OF TRANSPORTATION

Caltrans

CONSULTANT FUNCTIONAL SUPERVISOR

CALCULATED-DESIGNED BY

CHECKED BY

REVISED BY

DATE REVISED

LAST REVISION 00-00-00

DATE PLOTTED => 9/4/2009
TIME PLOTTED => 1:48:08 PM

Dist	COUNTY	ROUTE	POST MILES TOTAL PROJECT	SHEET No.	TOTAL SHEETS
08	SBd	10	25.3/27.3		

REGISTERED CIVIL ENGINEER DATE

PLANS APPROVAL DATE

REGISTERED PROFESSIONAL ENGINEER No. Exp. CIVIL STATE OF CALIFORNIA

THE STATE OF CALIFORNIA OR ITS OFFICERS OR AGENTS SHALL NOT BE RESPONSIBLE FOR THE ACCURACY OR COMPLETENESS OF SCANNED COPIES OF THIS PLAN SHEET.

SANBAG
1170 W. 3rd Street
2nd Floor
San Bernardino, CA 92410

RMC, INC.
6 Hutton Centre Drive
Suite 1250
Santa Ana, CA 92707

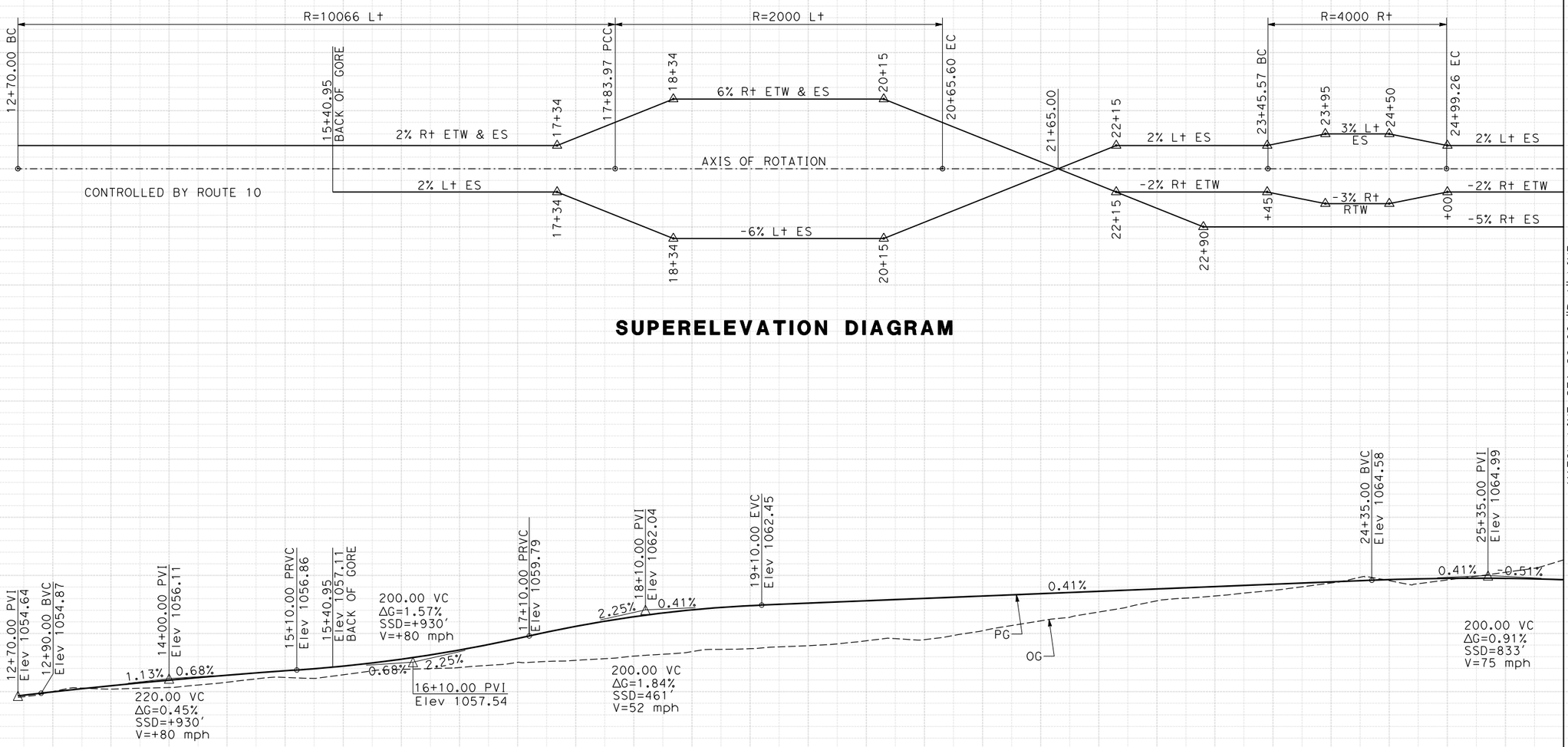

SUPERELEVATION DIAGRAM

PROFILE

"R-1" LINE

EB OFF-RAMP TO TIPPECANOE AVENUE

PROFILE AND SUPERELEVATION DIAGRAM

SCALE Horiz 1" = 50'
Vert 1" = 5'

PS- 1

STATION	12+00	13+00	14+00	15+00	16+00	17+00	18+00	19+00	20+00	21+00	22+00	23+00	24+00	25+00	26+00	TOTAL
CY Exc																
CY Emb																

REVISED BY | DATE REVISED

CALCULATED-DESIGNED BY | CHECKED BY

CONSULTANT FUNCTIONAL SUPERVISOR

STATE OF CALIFORNIA - DEPARTMENT OF TRANSPORTATION

Caltrans

LAST REVISION 00-00-00 | DATE PLOTTED => 9/4/2009 | TIME PLOTTED => 2:49:26 PM

Dist	COUNTY	ROUTE	POST MILES TOTAL PROJECT	SHEET No.	TOTAL SHEETS
08	SBd	10	25.3/27.3		

REGISTERED CIVIL ENGINEER DATE

PLANS APPROVAL DATE

REGISTERED PROFESSIONAL ENGINEER No. Exp. CIVIL STATE OF CALIFORNIA

THE STATE OF CALIFORNIA OR ITS OFFICERS OR AGENTS SHALL NOT BE RESPONSIBLE FOR THE ACCURACY OR COMPLETENESS OF SCANNED COPIES OF THIS PLAN SHEET.

SANBAG
1170 W. 3rd Street
2nd Floor
San Bernardino, CA 92410

RMC, INC.
6 Hutton Centre Drive
Suite 1250
Santa Ana, CA 92707

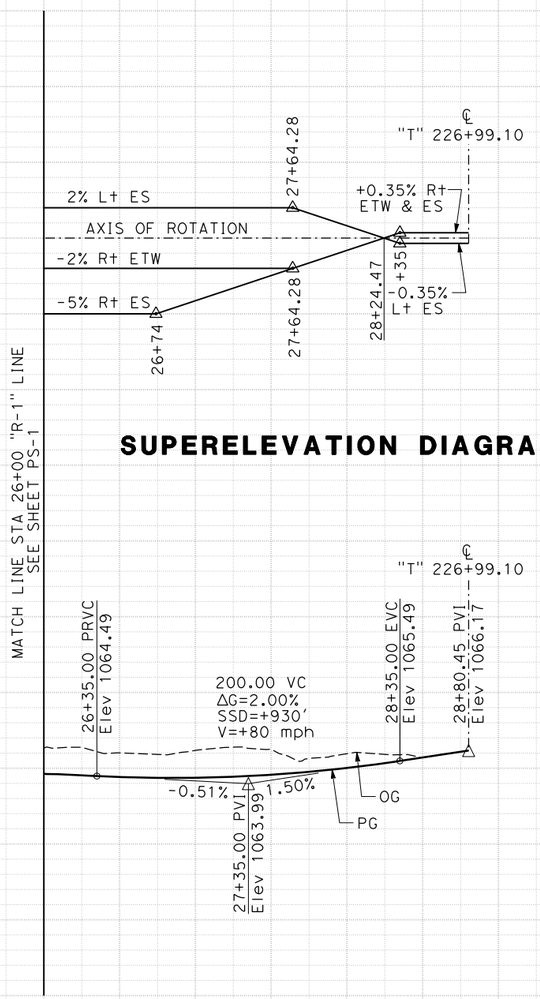

SUPERELEVATION DIAGRAM

PROFILE

"R-1" LINE
EB OFF-RAMP TO TIPPECANOE AVENUE

PROFILE AND SUPERELEVATION DIAGRAM

SCALE Horiz 1" = 50'
Vert 1" = 5'

PS- 2

STATION	26+00	27+00	28+00	29+00	30+00	TOTAL
CY Exc						
CY Emb						

REVISED BY | DATE REVISED | CALCULATED-DESIGNED BY | CHECKED BY | CONSULTANT FUNCTIONAL SUPERVISOR

STATE OF CALIFORNIA - DEPARTMENT OF TRANSPORTATION

Caltrans

LAST REVISION 00-00-00 | DATE PLOTTED => 9/4/2009 | TIME PLOTTED => 2:50:25 PM

Dist	COUNTY	ROUTE	POST MILES TOTAL PROJECT	SHEET No.	TOTAL SHEETS
08	SBd	10	25.3/27.3		

REGISTERED CIVIL ENGINEER DATE

PLANS APPROVAL DATE

REGISTERED PROFESSIONAL ENGINEER No. Exp. CIVIL STATE OF CALIFORNIA

THE STATE OF CALIFORNIA OR ITS OFFICERS OR AGENTS SHALL NOT BE RESPONSIBLE FOR THE ACCURACY OR COMPLETENESS OF SCANNED COPIES OF THIS PLAN SHEET.

SANBAG
1170 W. 3rd Street
2nd Floor
San Bernardino, CA 92410

RMC, INC.
6 Hutton Centre Drive
Suite 1250
Santa Ana, CA 92707

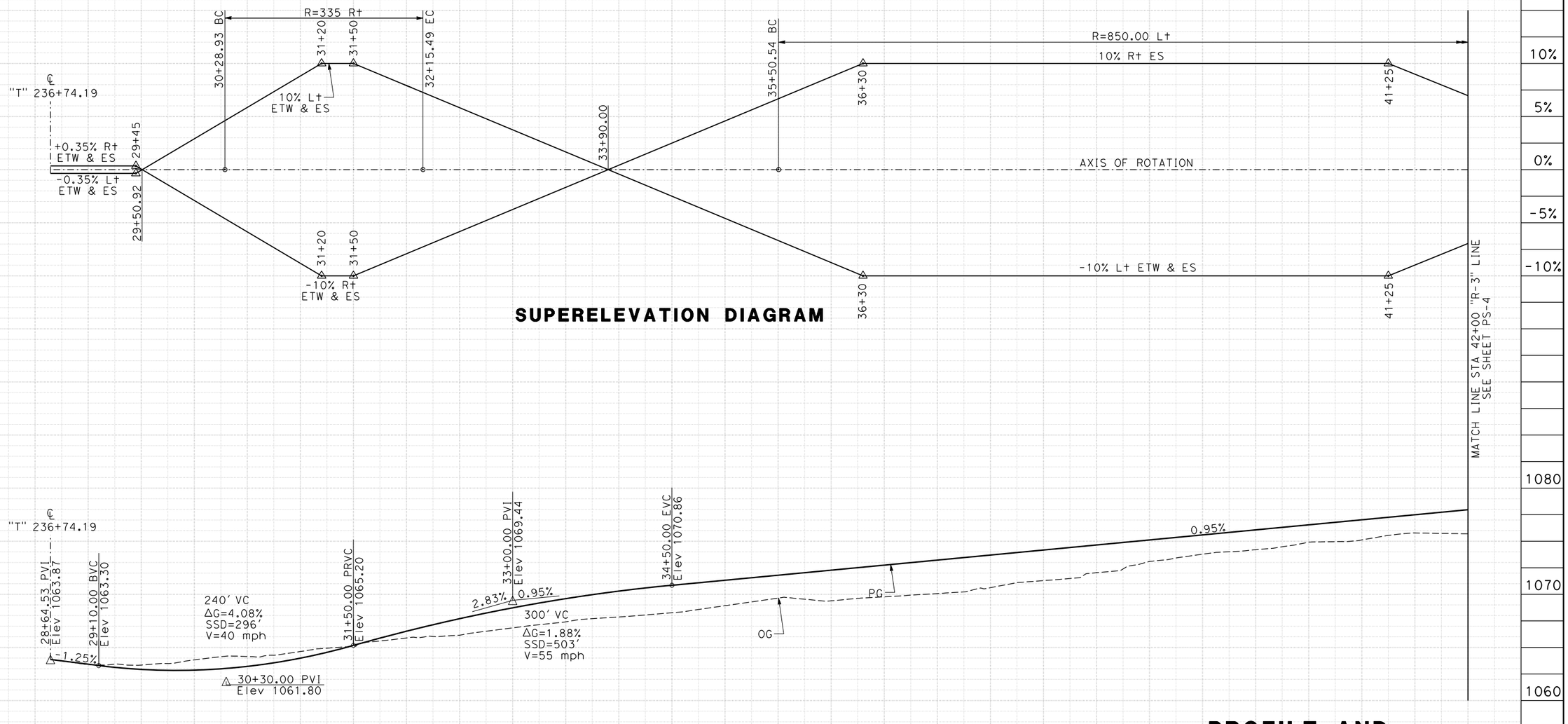

SUPERELEVATION DIAGRAM

PROFILE
"R-3" LINE
WB OFF-RAMP TO TIPPECANOE AVENUE

PROFILE AND SUPERELEVATION DIAGRAM

SCALE Horiz 1" = 50'
Vert 1" = 5'

PS- 3

REVISED BY | DATE REVISED | CALCULATED-DESIGNED BY | CHECKED BY | SUPERVISOR

STATE OF CALIFORNIA - DEPARTMENT OF TRANSPORTATION | CONSULTANT FUNCTIONAL SUPERVISOR

Caltrans

LAST REVISION 00-00-00 | DATE PLOTTED => 9/4/2009 | TIME PLOTTED => 2:51:13 PM

BORDER LAST REVISED 4/11/2008 | RELATIVE BORDER SCALE IS IN INCHES 0 1 2 3 | USERNAME => $(USER) | DGN FILE => ...\Plan Set\08448100fb03.dgn | CU 08250 | EA 448100

Dist	COUNTY	ROUTE	POST MILES TOTAL PROJECT	SHEET No.	TOTAL SHEETS
08	SBd	10	25.3/27.3		

REGISTERED CIVIL ENGINEER DATE

PLANS APPROVAL DATE

REGISTERED PROFESSIONAL ENGINEER No. Exp. CIVIL STATE OF CALIFORNIA

THE STATE OF CALIFORNIA OR ITS OFFICERS OR AGENTS SHALL NOT BE RESPONSIBLE FOR THE ACCURACY OR COMPLETENESS OF SCANNED COPIES OF THIS PLAN SHEET.

SANBAG
1170 W. 3rd Street
2nd Floor
San Bernardino, CA 92410

RMC, INC.
6 Hutton Centre Drive
Suite 1250
Santa Ana, CA 92707

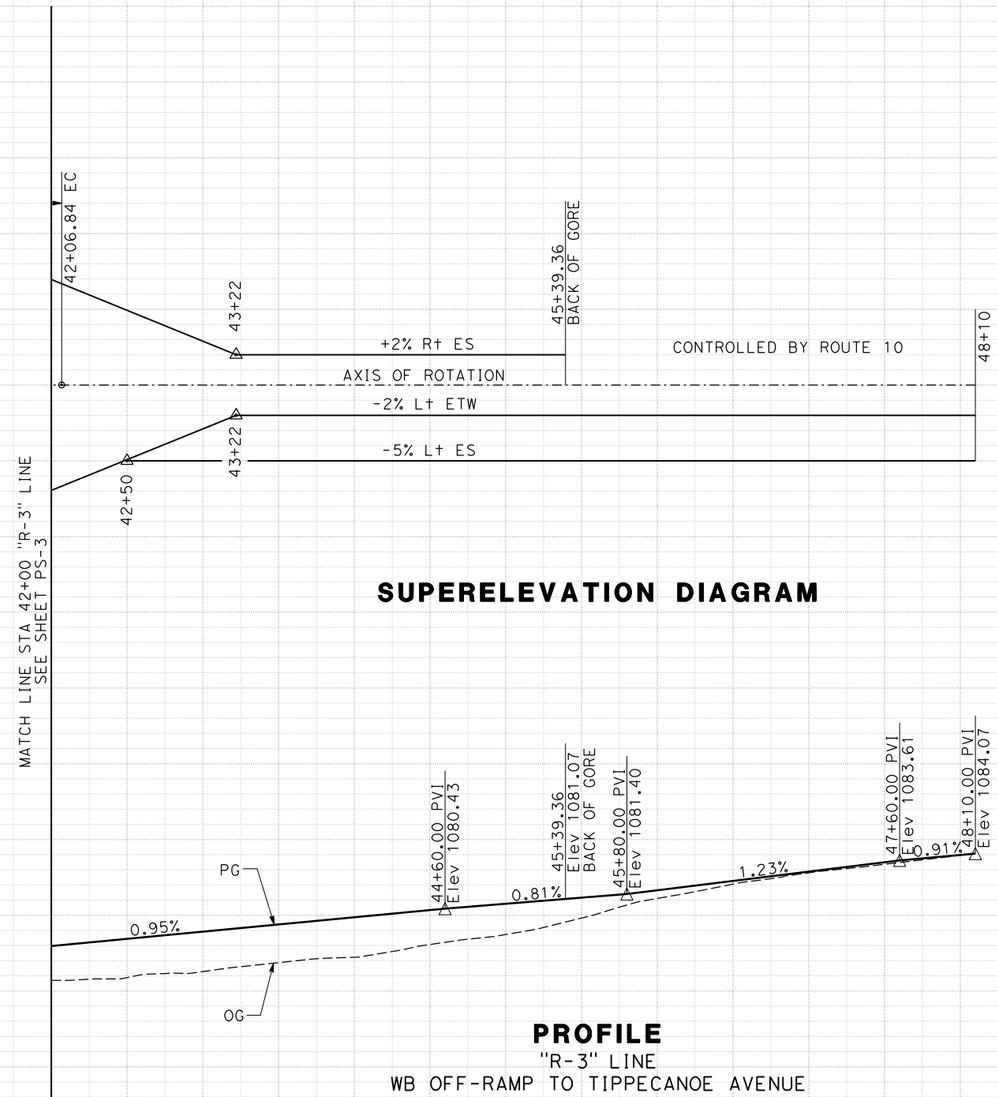

SUPERELEVATION DIAGRAM

PROFILE

"R-3" LINE
WB OFF-RAMP TO TIPPECANOE AVENUE

STATION	42+00	43+00	44+00	45+00	46+00	47+00	48+00	49+00	TOTAL
CY Exc									
CY Emb									

PROFILE AND SUPERELEVATION DIAGRAM

SCALE Horiz 1" = 50'
Vert 1" = 5'

PS- 4

REVISED BY | DATE REVISED

CALCULATED-DESIGNED BY | CHECKED BY

CONSULTANT FUNCTIONAL SUPERVISOR

STATE OF CALIFORNIA - DEPARTMENT OF TRANSPORTATION

Caltrans

LAST REVISION 00-00-00 | DATE PLOTTED => 9/4/2009 | TIME PLOTTED => 2:51:30 PM

Dist	COUNTY	ROUTE	POST MILES TOTAL PROJECT	SHEET No.	TOTAL SHEETS
08	SBd	10	25.3/27.3		

REGISTERED CIVIL ENGINEER DATE

PLANS APPROVAL DATE

REGISTERED PROFESSIONAL ENGINEER No. Exp. CIVIL STATE OF CALIFORNIA

THE STATE OF CALIFORNIA OR ITS OFFICERS OR AGENTS SHALL NOT BE RESPONSIBLE FOR THE ACCURACY OR COMPLETENESS OF SCANNED COPIES OF THIS PLAN SHEET.

SANBAG
1170 W. 3rd Street
2nd Floor
San Bernardino, CA 92410

RMC, INC.
6 Hutton Centre Drive
Suite 1250
Santa Ana, CA 92707

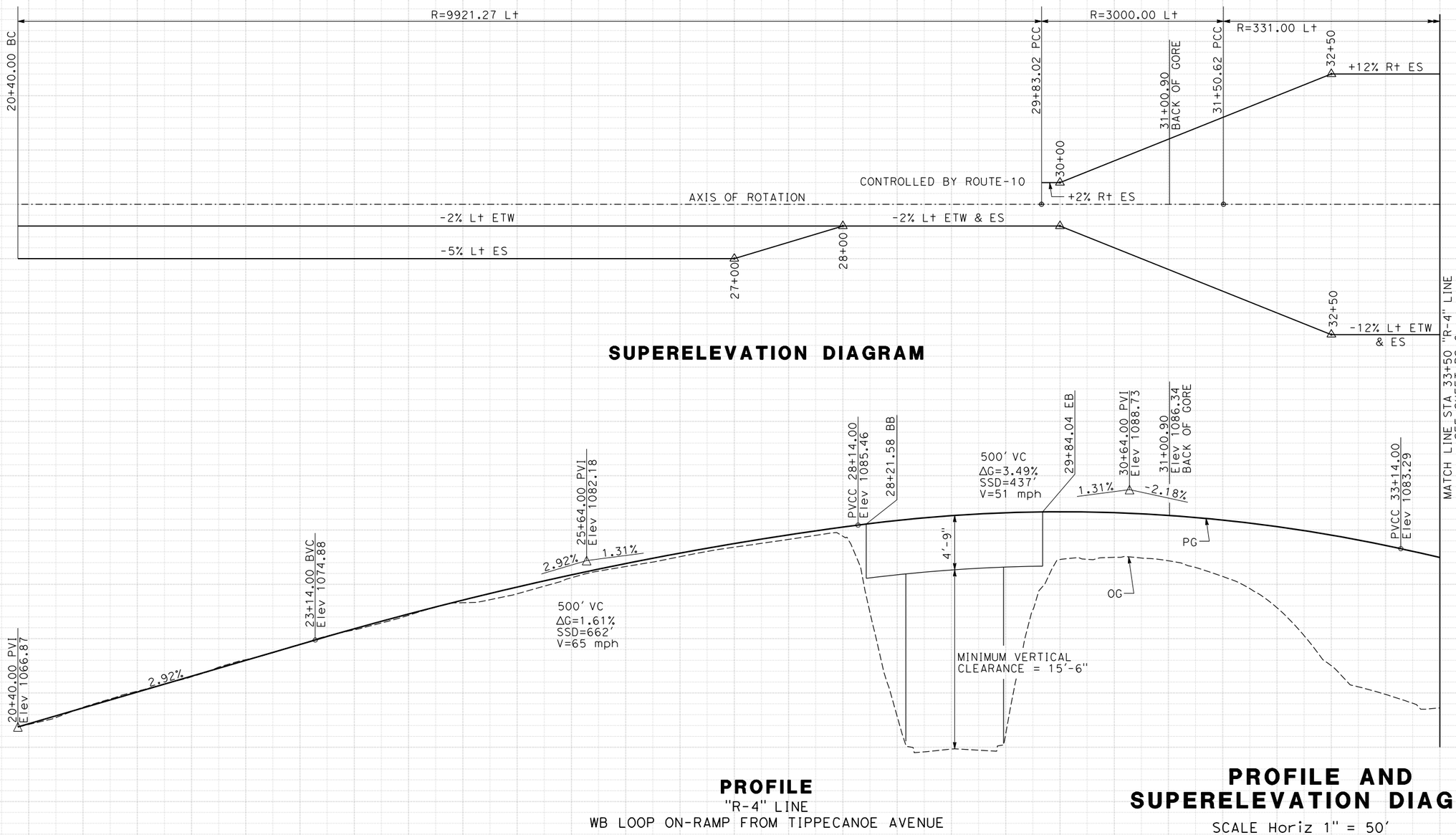

REVISED BY | DATE REVISED

CALCULATED-DESIGNED BY | CHECKED BY

CONSULTANT FUNCTIONAL SUPERVISOR

STATE OF CALIFORNIA - DEPARTMENT OF TRANSPORTATION

Caltrans

LAST REVISION 00-00-00 | DATE PLOTTED => 9/4/2009 | TIME PLOTTED => 2:52:00 PM

Dist	COUNTY	ROUTE	POST MILES TOTAL PROJECT	SHEET No.	TOTAL SHEETS
08	SBd	10	25.3/27.3		

REGISTERED CIVIL ENGINEER DATE

PLANS APPROVAL DATE

REGISTERED PROFESSIONAL ENGINEER No. Exp. CIVIL STATE OF CALIFORNIA

THE STATE OF CALIFORNIA OR ITS OFFICERS OR AGENTS SHALL NOT BE RESPONSIBLE FOR THE ACCURACY OR COMPLETENESS OF SCANNED COPIES OF THIS PLAN SHEET.

SANBAG
1170 W. 3rd Street
2nd Floor
San Bernardino, CA 92410

RMC, INC.
6 Hutton Centre Drive
Suite 1250
Santa Ana, CA 92707

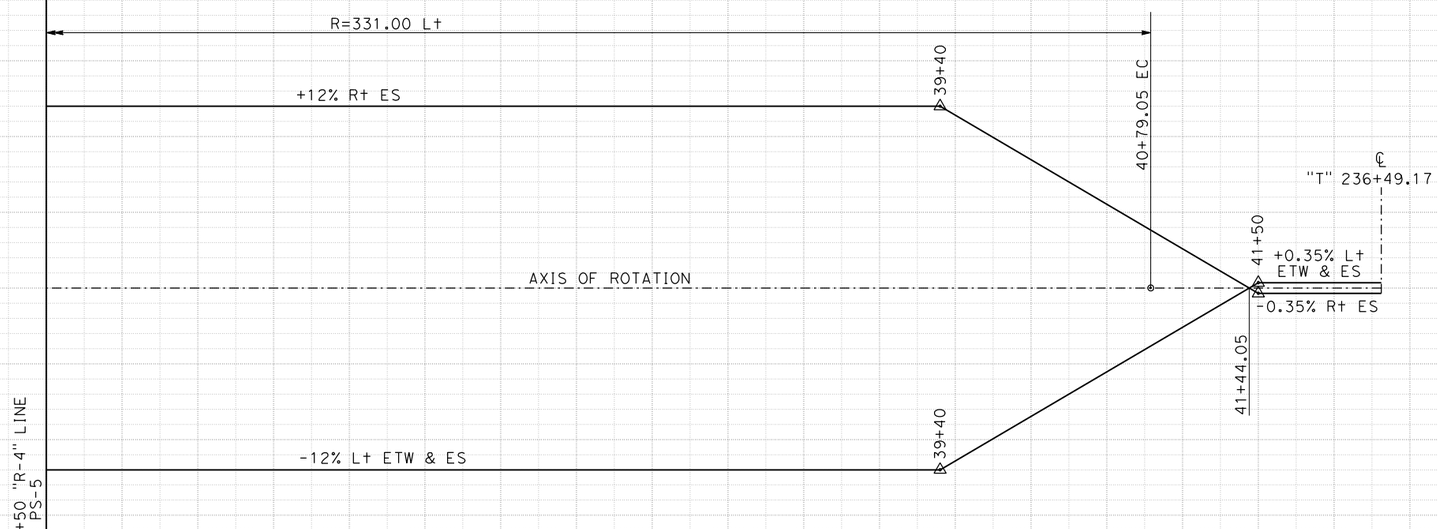

SUPERELEVATION DIAGRAM

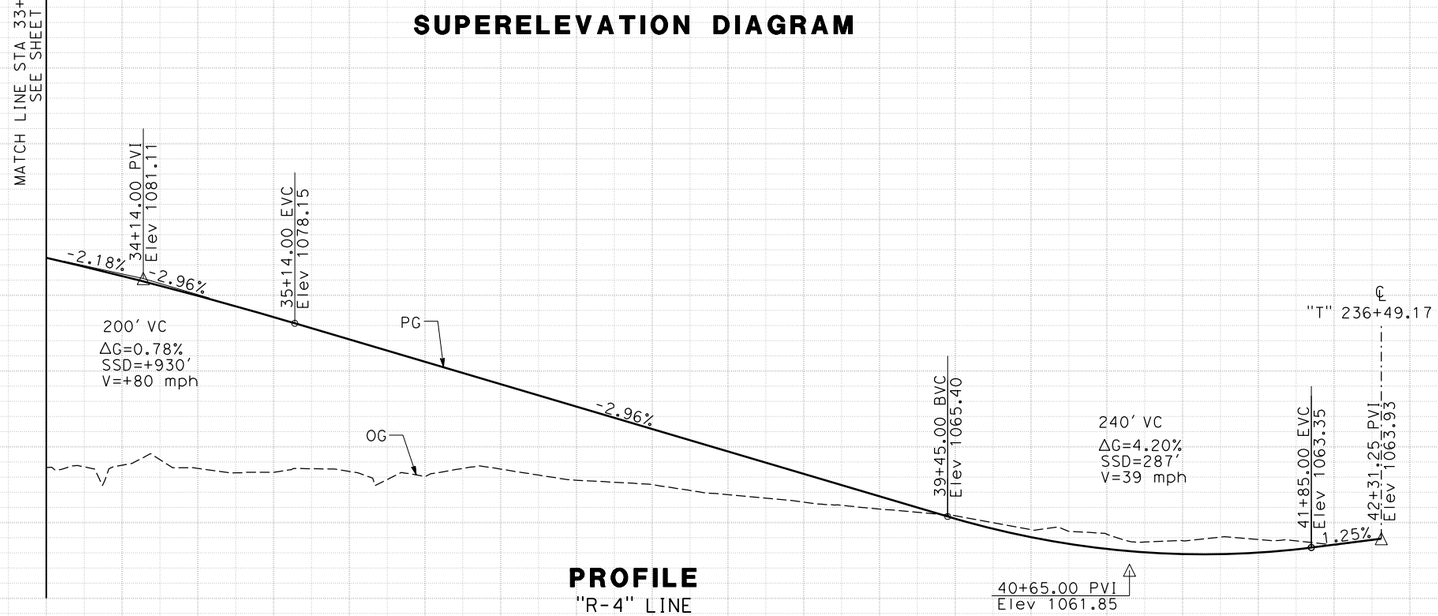

PROFILE

"R-4" LINE

WB LOOP ON-RAMP FROM TIPPECANOE AVENUE

PROFILE AND SUPERELEVATION DIAGRAM

SCALE Horiz 1" = 50'
Vert 1" = 5'

PS- 6

STATION	34+00	35+00	36+00	37+00	38+00	39+00	40+00	41+00	42+00	43+00	TOTAL
CY Exc											
CY Emb											

REVISED BY | DATE REVISED

CALCULATED-DESIGNED BY | CHECKED BY

CONSULTANT FUNCTIONAL SUPERVISOR

STATE OF CALIFORNIA - DEPARTMENT OF TRANSPORTATION

Caltrans

LAST REVISION 00-00-00 | DATE PLOTTED => 9/4/2009 | TIME PLOTTED => 2:52:21 PM

ATTACHMENT E

Advance Planning Studies (APS)

State of California
DEPARTMENT OF TRANSPORTATION

Business, Transportation and Housing Agency

Memorandum

Flex your power!
Be energy efficient!

To: **MARK LANCASTER– 8**
Project Manager
D8 PPRM

Date: December 17, 2009

File: 08-Sbd-10-PM 25.3/27.3
I-10/Tippecanoe Project
EA 08-448100
Tippecanoe Ave OC (Widen)
Bridge No. 54-0598
San Timoteo Creek Bridge (Widen)
Bridge No. 54-0599

From: **ROBERT ZEZOFF**
Senior Bridge Engineer
Office of Special Funded Projects/Structure Local Assistance
Structure Design Services
Division of Engineering Services

Subject: APS Review Comments

OSFP/SLA has reviewed the Advanced Planning Studies submittal package and they are approved.

If you have any questions, please call Robert Zezoff at (916) 227-8852.

c: Bob Mathews – AECOM (Orange)
Dennis Saylor – SANBAG (w/o att.)
George Morhig – D8 Design (w/o att.)
Lam Nguyen – OSFP (w/o att.)
file

PREPARED FOR THE STATE OF CALIFORNIA - DEPARTMENT OF TRANSPORTATION

DIST.	COUNTY	ROUTE	POST MILES TOTAL PROJECT
08	SBd	10	25.3/27.3

SAN BERNARDINO ASSOCIATED GOVERNMENTS
1170 W. 3RD STREET
SAN BERNARDINO, CA 92410

AECOM USA, Inc. | AECOM
800 N. HAVEN AVENUE, SUITE 410, ONTARIO, CA 91764
T 909-933-5255 F 909-933-5229 www.aecom.com

CURVE DATA				
	R	Δ	L	T
1	9999.95'±	15°08'10"±	2641.72'±	1328.60'±
2	9921.27'	5°26'46"	943.02'	471.87'
3	3000.00'	3°12'03"	167.60'	83.82'

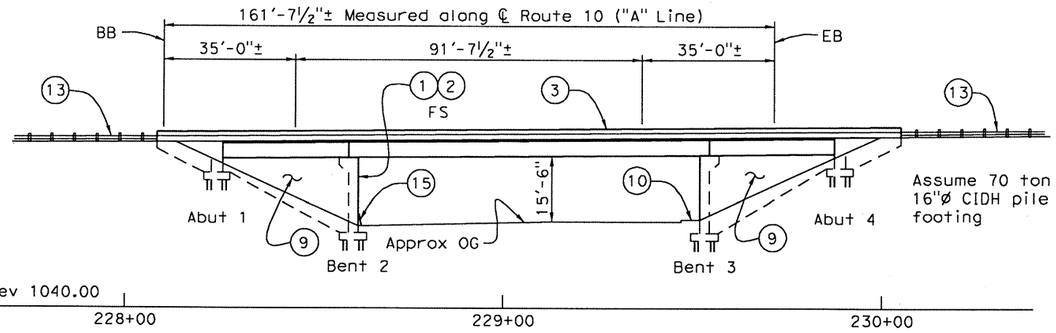

MIRROR ELEVATION
1" = 20'

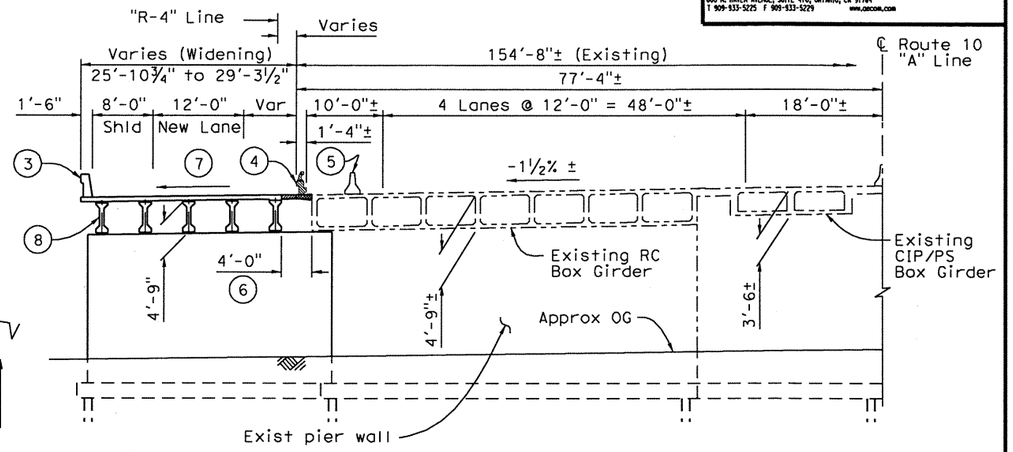

TYPICAL SECTION
1" = 10'

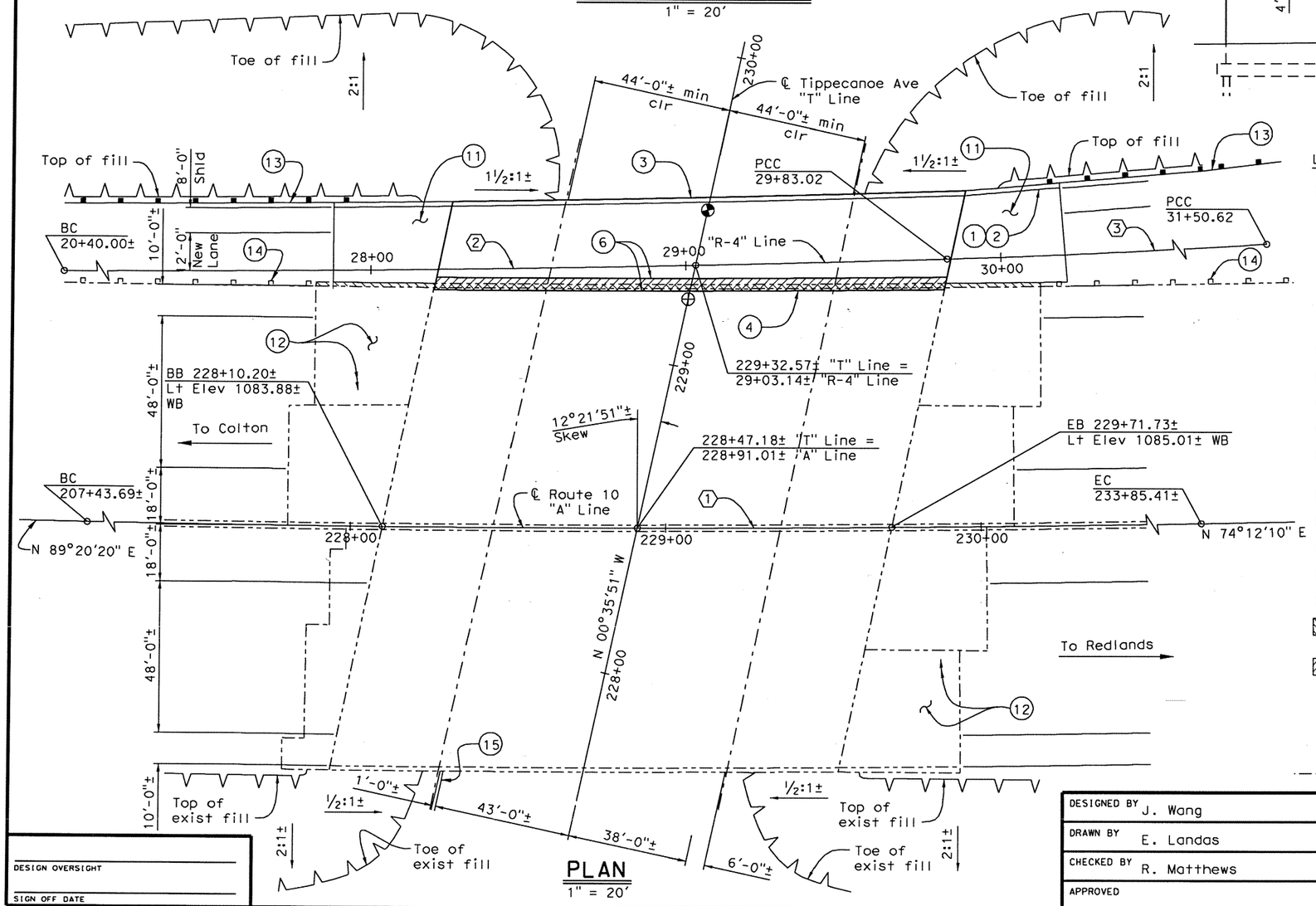

PLAN
1" = 20'

Legend:

1. Paint "Tippecanoe Avenue Undercrossing"
2. Paint "Br No. 54-598"
3. Concrete Barrier Type 736
4. Remove existing barrier and overhang
5. Temporary Railing Type K
6. Closure pour
7. Match existing cross slope
8. Precast P/S concrete I-Girder
9. Concrete curtain wall
10. Remove and replace portion of existing sidewalk as required (See Roadway Plans)
11. Structure Approach Type N(30S)
12. Existing Approach Slab
13. MBGR (See Roadway Plans)
14. Remove existing MBGR
15. Concrete Barrier (Type 60D)

Denotes bridge removal (portion)
Denotes closure pour
Widening point of minimum vertical clearance
Existing point of minimum vertical clearance (16'-0")
Denotes existing structure

Date of estimate		05-11-09
Bridge removal		$30,000
Structure depth	=	4'-9"
Length	=	161'-7½"
Width	=	25'-10¾" & Var
Area	=	4461 ft²
Cost/ft² including 10% mobilization & 25% contingency	=	$381.30
Total cost	=	$1,701,000

DESIGNED BY J. Wang	DATE 09-01-09	R. Matthews PROJECT ENGINEER	PLANNING STUDY
DRAWN BY E. Landas	DATE 09-01-09		TIPPECANOE AVE UC (WIDEN)
CHECKED BY R. Matthews	DATE 09-01-09		BRIDGE NO. 54-598 / CU 08
APPROVED	DATE		SCALE: As Shown / EA 448100

DESIGN OVERSIGHT
SIGN OFF DATE

ADVANCE PLANNING STUDY SHEET (ENGLISH) (REV. 2/25/05)

FILE => p:\60051601_Tippecanoe_ORA\cadd\Struct\Sheet\54-598-a-gp01.dgn

USERNAME => LandaseE DATE PLOTTED => 9/1/2009 TIME PLOTTED => 9:40:40 AM

PREPARED FOR THE STATE OF CALIFORNIA - DEPARTMENT OF TRANSPORTATION

DIST.	COUNTY	ROUTE	POST MILES TOTAL PROJECT
08	SBd	10	25.3/27.3

SAN BERNARDINO ASSOCIATED GOVERNMENTS
1170 W. 3RD STREET
SAN BERNARDINO, CA 92410

AECOM USA, Inc. | AECOM
800 N. HAVEN AVENUE, SUITE 410, ONTARIO, CA 91764
T 909-933-5225 F 909-933-5229 www.aecom.com

Retrofit Legend:

(A) Abutment catcher block
(B) Pier wall steel jacket

Date of estimate		05-11-09
Bridge removal		$25,000
Structure depth	=	3'-9"
Length	=	180'-9"
Width	=	21'-6"
Area	=	3886 ft^2
Cost/ft^2 including 10% mobilization & 25% contingency	=	$544.00
Total cost	=	$2,114,000

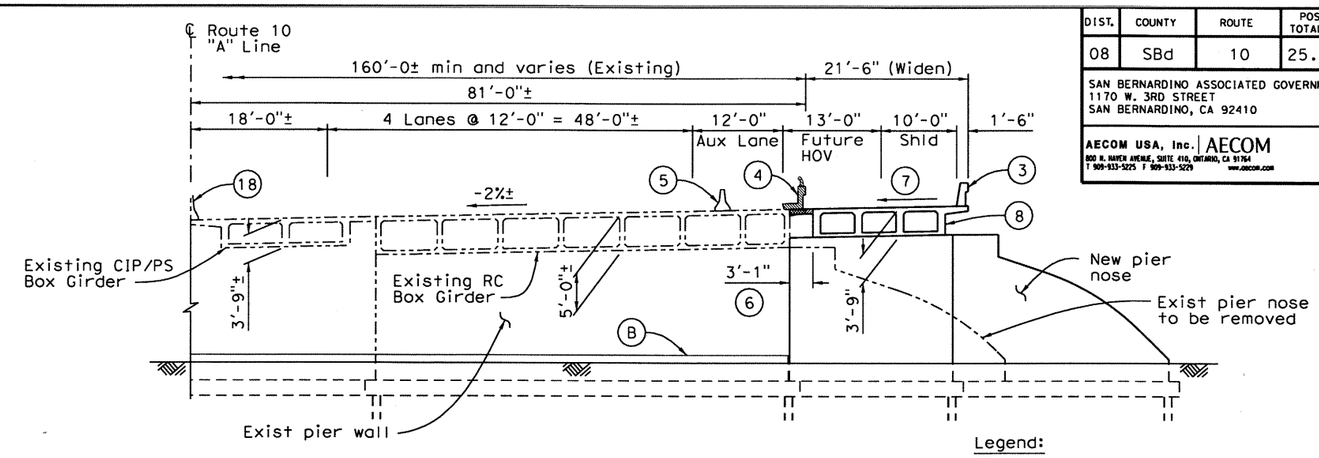

TYPICAL SECTION
1" = 10'

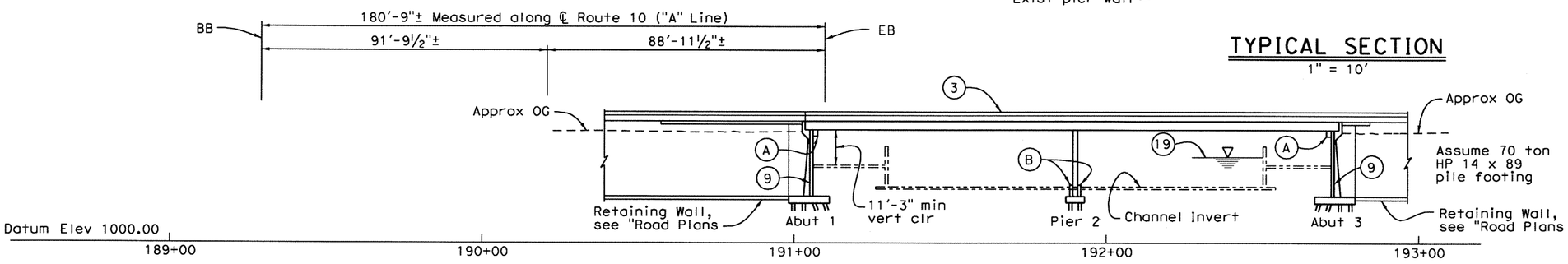

ELEVATION
1" = 20'

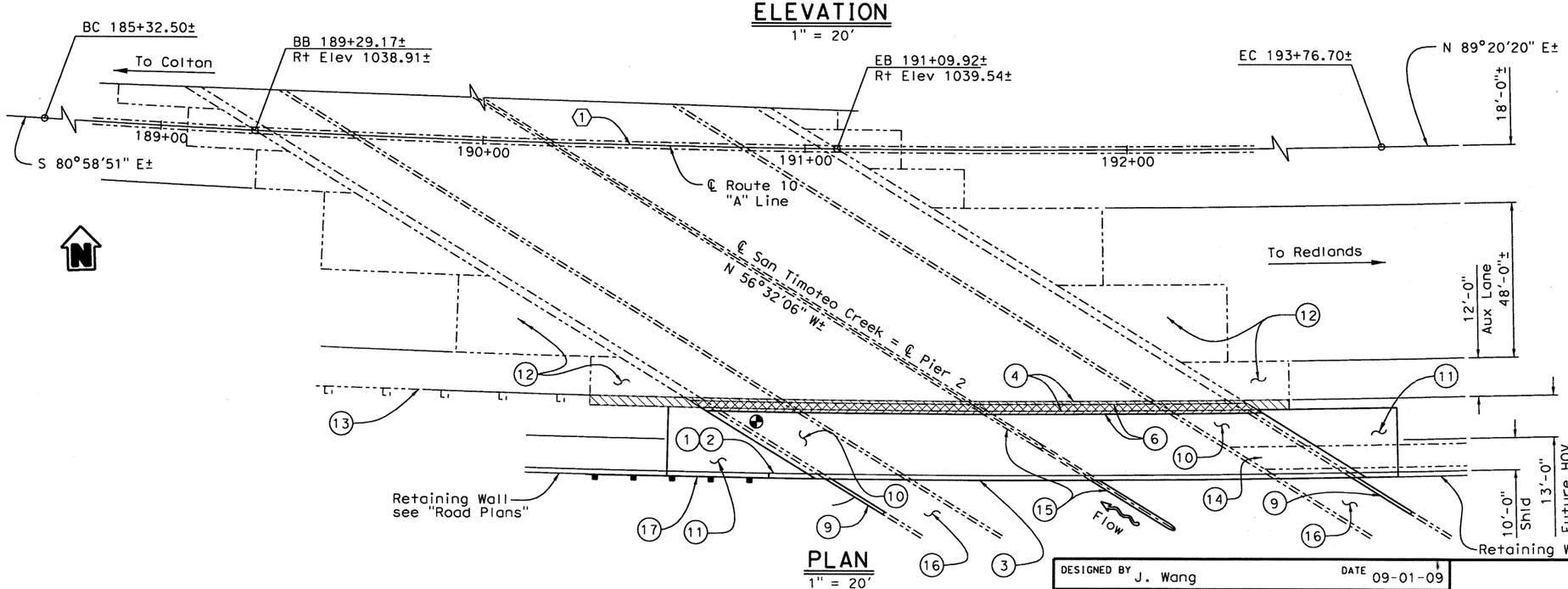

PLAN
1" = 20'

Legend:

1. Paint "San Timoteo Creek Bridge"
2. Paint "Br No. 54-599"
3. Concrete Barrier Type 736
4. Remove existing barrier and overhang
5. Temporary Railing Type K
6. Closure pour
7. Match existing cross slope
8. CIP/PS concrete box girder
9. Wing wall
10. Reconstruct portion of existing access road
11. Structure Approach Type N(30S)
12. Existing Approach Slab
13. Remove existing MBGR
14. Remove and relocate existing 5' x 8' RCB Inlet.
15. Remove and replace exist pier nosing
16. Exist access road
17. MBGR (See Roadway Plans)
18. Existing Concrete Barrier Type 50A (Mod)
19. High Water Elev 1027.50

Denotes bridge removal (portion)
Denotes closure pour
Widening point of minimum vertical clearance
Existing point of minimum vertical clearance (10'-0") occured at westbound I-10 not shown
Denotes existing structure

CURVE DATA				
	R	Δ	L	T
(1)	4999.96'±	9°40'26"±	844.20'±	423.11'±

DESIGN OVERSIGHT

SIGN OFF DATE

DESIGNED BY J. Wang	DATE 09-01-09	R. Matthews PROJECT ENGINEER	PLANNING STUDY
DRAWN BY E. Landas	DATE 09-01-09		SAN TIMOTEO CREEK BRIDGE (WIDEN)
CHECKED BY R. Matthews	DATE 09-01-09		BRIDGE NO. 54-599 / CU 08
APPROVED	DATE		SCALE: As Shown / EA 448100

ADVANCE PLANNING STUDY SHEET (ENGLISH) (REV. 2/25/05)

FILE => p:\60051601_Tippecanoe_ORA\CADD\Struct\Sheet\54-599-a-gp01.dgn

USERNAME => LReyes DATE PLOTTED => 12/7/2009 TIME PLOTTED => 2:38:50 PM

ATTACHMENT F

Right of Way Data Sheet

Date: January 13, 2011

08-SBd -10-PM-25.3/27.3
Project Description: Reconstruct I-10/
Tippecanoe Avenue Interchange in the Cities of
San Bernardino and Loma Linda
EA: 448100 Updated
Project # 0800000710

To: MARK LANCASTER

From: BETTY BOBOSIK
R/W Project Delivery

Subject: Right of Way Sheet

We have completed an updated ROW data sheet for estimate of the right of way costs for the above-referenced project based on maps we received from you **April 22, 2009** and the following assumptions and limiting conditions:

[ ] 1. The mapping did not provide sufficient detail to determine the limits of the right of way required.

[ ] 2. The transportation facilities have not been sufficiently designed so that the estimator could determine the damages to any of the remainder parcels affected by the project.

[X] 3. Additional right of way requirements are anticipated, but are not defined due to the preliminary nature of the early design requirements.

[ ] 4. We have determined there are no right of way functional involvement in the proposed project at this time, as designed.

Right of Way Lead Time will require a minimum of 36 months after we begin receiving final right of way requirements (PYPSCAN node No. 224), necessary environmental clearance has been obtained, and freeway agreements have been approved. From the date of receipt of final right of way requirements (PYPSCAN node No. 225), we will require a minimum of 25 months prior to the date of certification of the project. Either of these actions may reflect adversely on the District's other programs or our public image generally.
No updated maps were supplied. This estimate is to update cost only and cannot be relied upon for programming purposes as to parcel counts.

*TOTAL PROJECT HOURS FOR R/W: 39,645

*NOTE: THESE HOURS ARE PRELIMINARY BASED ON THE INFORMATION PROVIDED WITH THE DATA SHEET REQUEST. HOURS ARE SUBJECT TO CHANGE AS NEW INFORMATION IS PROVIDED.

EVNT RW	1/13
COST RW1 – 6	1/13
TEXT TI	1/13
SCAN	1/13
CLASS	
AGRE	
TPRC	

Attachments:
[XX] Right of Way Data Sheet
[XX] Utility Information Sheet
[XX] Railroad Information Sheet

Date: January 13, 2011

08-SBd -10-PM-25.3/27.3
Project Description: Reconstruct I-10/ Tippecanoe Avenue Interchange in the Cities of San Bernardino and Loma Linda
EA: 448100 Updated
Project # 0800000710

Subject: Updated Request for ROW data sheet.

1. Right of Way Cost Estimate:

		Value
A.	Acquisition, including Excess Lands Damages, Goodwill, Major Rehabilitation, and Environmental Permits to Enter	$ 20,161,000.00
B.	Acquisition of Offsite Mitigation. **None Requested.**	$ 0.00
C.	Utility Relocation (State share)	$ 3,025,000.00
D.	RAP	$ 1,135,000.00
E.	Clearance/Demolition	$ 945,000.00
F.	Title and Escrow Fees	$ 119,000.00
G.	Project Permit Fees	$ 5,000.00
H.	Condemnation Costs	$ 6,708,000.00
I.	**Total R/W Estimate:**	**$ 32,143,000.00**
J.	Construction Contract Work	$ 0.00

1a. Real Property Services:

A.	Routine Maintenance (Object Code 058)	$ 45,000.00
B.	Advertising Costs (Object Code 039)	$ 0.00
C.	Utility Costs (Object Code 002)	$ 0.00
D.	Total Real Property Services Estimate:	$ 45,000.00

2. Anticipated Pypscan Date of Right of Way Certification **10/2012**

3. Parcel Data:

Type	Dual/Appr	Utility Involvement
X		U4-1
A		-2
B 54	1	-3 8
C 11	2	-4
D 5	5	U5-7 6
E xxxx		-8
F xxxx		-9 8
Total 70		

RR Involvement	NO
C&M Agrmt	0
Svc Contract	0
OE Clearances	0
Clauses	0
LIC / RE	0
Government Lands	NO
Number of Parcels	0
Misc. R/W Work	0
RAP Displ	36
Clear/Demo	36
Const Permits	0
Condemnation	18
Permits to Enter-ENV	0

Areas: Right of Way: S.F. 568,193
Excess: S.F. 4,379
No. Excess Land Parcels: 1

Date: January 13, 2011

08-SBd -10-PM-25.3/27.3
Project Description: Reconstruct I-10/
Tippecanoe Avenue Interchange in the Cities of
San Bernardino and Loma Linda
EA: 448100 Updated
Project # 0800000710

4.Are there major items of construction contract work?

Yes ___ No _X__(If yes, explain.)

5. Provide a general description of the right of way and excess lands required (zoning, use, major improvements, critical or sensitive parcels, etc.). **No right of way required.** _____

Type and Number of Parcels: Fee 68
Partial 29
Full 39
Easements 29
Temporary 29
Permanent _____

Note: Two parcels are TCE only. Remainder of TCES are on parcels that also contain partial takes.

6. Is there an effect on assessed valuation?
Yes ___Not Significant ____No__X_(If yes, explain.)

7. Are utility facilities or rights of way affected?
Yes ☒ No ☐ (If "Yes," attach Utility Information Sheet, Exhibit 4-EX-5.)
The following checked items may seriously impact lead time for utility relocation:
☐ Longitudinal policy conflict(s)
☐ Environmental concerns impacting acquisition of potential easements
☐ Power lines operating in excess of 50 KV and substations
(See attached Exhibit 4-EX-5 for explanation.)

8. Are railroad facilities or rights of way affected? Yes___No _X__
(If yes, attach Railroad Information Sheet, Exhibit 4-EX-6.)

9. Were any previously unidentified sites with hazardous waste and/or material found? Yes ___ None Evident _X_(If yes, attach memorandum per Procedural Handbook Chapter 4, Section 4.01.10.00.)

10. Are RAP displacements required? Yes _X_ No ___(If yes, provide the following information.)

No. of single family _26__ No. of business/nonprofit __8__

No. of multi-family __2_ No. of farms ____

Based on Draft/Final Relocation Impact Statement/Study dated _____, it is anticipated that sufficient replacement housing (will/will not) be available without Last Resort Housing.

11. Are there material borrow and/or disposal sites required?
Yes _X_ No ____(If yes, explain.) **Borrow material will be required and it will be up to the contractor to determine source.**

12. Are there potential relinquishments and/or abandonments?
Yes ___ No _X__(If yes, explain.)

13. Are there existing and/or potential Airspace sites?
Yes ___ No _X__(If yes, explain.)

14. Indicate the anticipated Right of Way schedule and lead time requirements.
(Discuss if District proposes less than PMCS lead time and/or if significant pressures for project advancement are anticipate

PYPSCAN lead time (from Maps to R/W to project certification) _36__months.

Date: January 13, 2011

08-SBd -10-PM-25.3/27.3
Project Description: Reconstruct I-10/
Tippecanoe Avenue Interchange in the Cities of
San Bernardino and Loma Linda
EA: 448100 Updated
Project # 0800000710

15. Is it anticipated that all Right of Way work will be performed by CALTRANS staff?
Yes __X__ No __(If no, discuss.)

Evaluations prepared by:

Right of Way:	Name LAWRENCE KELLY	Date 1-14-11
Railroad:	Name MARGIE SMITH	Date 1-14-11
Utilities:	Name JERRY ARNERICH	Date 1-18-11
Government Lands:	Name ANTHONY RIZZI	Date 1/14/11
Property Management:	Name JACKIE WILLIAMS	Date 1-14-11

Reviewed By:

BETTY BOBOSIK
Senior Right of Way Agent
Project Coordinator & Railroads
San Bernardino Office
Right of Way, District 8

I have personally reviewed this Right of Way Data Sheet and all supporting information. I certify that the probable Highest and Best Use, estimated values, escalation rates, and assumptions are reasonable and proper subject to the limiting conditions set forth, and I find this Data Sheet complete and current.

STEPHEN M HATT
Project Delivery Manager
Right of Way

Date 1-18-11

cc. Program Manager
Project Manager

08-SBd-PM-25.3/27.3
E.A. 44810

2nd REVISED UTILITY INFORMATION SHEET

1. Name of utility companies involved in project:

Southern California Edison-Transmission and Distribution, The Gas Company (SCG-Distribution), Verizon, Time Warner Cable, Sprint, Golden State for Time Warner Telecom, City of Loma Linda-Water and Sewer, City of San Bernardino Water and Sewer, City of Riverside Water, The Gage Canal Company, and Loma Linda University Medical Center. NOTE: DO NOT DELETE ANY OF THESE UTILITY OWNERS.

2. Types of facilities and agreements required:
Underground electric, gas, telephone, fiber optic, water, sewer and cable TV.

Overhead electric, telephone and cable TV.

Notices to Owners and Utility Agreements will be required.

3. Is any facility a longitudinal encroachment in existing or proposed access controlled right of way? **None expected.**

Disposition of longitudinal encroachment(s):
___ Relocation required.
_ __ Exception to policy needed.
_X__ Other. Explain: **SBD-Sewer has indicated that they propose to install new sewer facilities outside of the present right of way in the northeast quadrant of the project. The State intends to acquire new right of way in this area and provide SBd-Sewer with a Public Utility Easement (PUE).**

4. Additional information concerning utility involvements on this project, i.e., long lead time materials, growing or species seasons, customer service seasons (no transmission tower relocations in summer).

Design has indicated that this project construction proposes to: " Reconstruct the Interchange and add Auxiliary Lanes on Route 10 at Tippecanoe Avenue in San Bernardino/Loma Linda." An updated utility search was performed. Design then prepared accurate utility location maps or U-Sheets. Design then determined all utility conflicts that required positive location (potholing). Required potholing was completed. Relocation requirements are now being determined. Note: 18 months of lead time are estimated for the engineering of two new SCE-Transmission steel power poles.

This itemized State Share estimate per Utility Owner is based on current project information:

1) SCE-Transmission (Breakdown: 2 SCE-Transmission multi use wood Transmission poles to be removed and replaced with engineered steel poles @ 500,000 = $1,000,000 x 50% State liability = $500,000. Other SCE-T underground = $100,000 @ 50% State liability = $50,000.)
Total SCE-T State liability= $550,000

2) SCE-Distribution (Breakdown: 4 SCE multi use wood Distribution poles @ $35,000 = $490,000 x 50% State liability = $245,000. 8 SCE multi use wood Distribution poles @ $35,000 x 100% State liability = $280,000. 2 SCE Vault lowerings = $100,000 @ 50% State liability = $50, 000. Other SCE-D underground = $200,000 @ 50% State liability = $100,000.)
Total SCE-D State liability = $675,000.

3) Verizon OH & UG = $600,000 @ 50% State liability = $300,000

4) Time Warner Cable OH & UG = @ Mixed liability. State liability = $100,000

5) SCG-Distribution = $800,000 @ 50% State liability = $400,000

(continued on next page)

6) City of Loma Linda-Water and Sewer @ 100% State Liability = $400,000

7) City of San Bernardino-Water @ 100% State liability = $400,000

8) City of San Bernardino-Sewer @ 100% State liability = $200,000

Total Estimated State Share for Utility Relocations = $3,025,000

5. PMCS Input Information

Total estimated cost of State's obligation for utility relocation on this project:
(Phase 9 funding) **$3,025,000**

Note: Total estimated cost includes the Department obligation to relocate longitudinal encroachments in access-controlled right of way and acquire any necessary utility easements as noted in Section #3 above.

Utility Involvement

U4-1		U5-7	6
-2		-8	
-3	8	-9	8
-4			

Prepared By: _____
JERRY ARNERICH
Right of Way-Utility Estimator

Date: June 16, 2010

Date: January 13, 2011

08-SBd -10-PM-25.3/27.3
Project Description: Reconstruct I-10/
Tippecanoe Avenue Interchange in the Cities of
San Bernardino and Loma Linda
EA: 448100 Updated
Project # 0800000710

RAILROAD AND GOVERNMENT LANDS INFORMATION SHEET

1. Describe railroad facilities or rights of way affected.

   NONE

2. When branch lines or spurs are affected, would acquisition and/or payment of damages to businesses and/or industries served by the railroad facility be more cost effective than construction of a facility to perpetuate the rail service? Yes ____No_**X**___(If yes, explain.)

3. Discuss types of agreements and rights required from the railroads. Are grade crossings requiring service contracts, or grade separations requiring construction and maintenance agreements involved?

   NONE

4. Remarks (non-operating railroad right of way involved?):

5. Is Government Lands involved? Yes___ No _**X**__

   If yes, number of parcels_____
   Agency Name and Explanation:

6. PMCS Input Information

RR Involvement	**NO**
C&M Agreement	**0**
SVC Contract	**0**
0E Clearances	**0**
Clauses	**0**
LIC/RE	**0**
Government Lands	**NO**
Number parcels	**0**

Prepared By: Margie Smith
MARGIE SMITH
Right of Way Railroad Coordinator

Date: 1-14-11

Prepared By: _____
ANTHONY RIZZI
Right of Way Government Lands Coordinator

Date: 1/14/11

Date: January 13, 2011

08-SBd -10-PM-25.3/27.3
Project Description: Reconstruct I-10/
Tippecanoe Avenue Interchange in the Cities of
San Bernardino and Loma Linda
EA: 448100 Updated
Project # 0800000710

PROPERTY MANAGEMENT/EXCESS LAND INFORMATIONAL SHEET

WBS CODE	WBS ACTIVITY	NUMBER OF PARCELS	HOURS	COST
	PROPERTY MANAGEMENT		NOT APPLICABLE	
195.40.05	Fair Market Rent Determinations (Residential)			
195.40.10	Fair Market Rent Determinations (Non-Residential)			
195.40.15	Regular Rental Property Management	68	2,000	
195.40.20	Property Maintenance and Rehabilitation (Rental Property)	36	3,000	40,000
195.40.25	Property Maintenance and Rehabilitation (Non-Rental Property)	32	1,000	5,000
195.40.30	Hazardous Waste and Hazardous Materials			
195.40.35	Transfer of Property to Clearance Status	68	600	
270.25.03	Secure Lease for Resident Engineer's Office Space or Trailer			
		Subtotal	6600	45,000
	EXCESS LAND		NOT APPLICABLE	
195.45.05	Excess Land Inventory	1	20	
195.45.10	Excess Land Appraisal and Public Sale Estimate	1	120	
195.45.15	Excess land Inventory ("Roberti Bill)			
195.45.20	Excess Land Sales to $15,000			
195.45.25	Excess Land Sales from $15,001 to $500,000	1	300	
195.45.30	Excess Land Sales over $500,000			
195.45.35	CTC and AAC Coordination			
		Subtotal	440	

TOTAL HOURS (ONLY) 7040

Date: 1-14-11

JACKIE WILLIAMS
Property Management
Excess Land

ATTACHMENT G

Existing Utility Plans

Dist	COUNTY	ROUTE	POST MILES TOTAL PROJECT	SHEET No.	TOTAL SHEETS
08	SBd	10	25.3/27.3		

REGISTERED CIVIL ENGINEER DATE

PLANS APPROVAL DATE

REGISTERED PROFESSIONAL ENGINEER No. Exp. CIVIL STATE OF CALIFORNIA

THE STATE OF CALIFORNIA OR ITS OFFICERS OR AGENTS SHALL NOT BE RESPONSIBLE FOR THE ACCURACY OR COMPLETENESS OF SCANNED COPIES OF THIS PLAN SHEET.

SANBAG
1170 W. 3rd Street
2nd Floor
San Bernardino, CA 92410

RMC, INC.
6 Hutton Centre Drive
Suite 1250
Santa Ana, CA 92707

NOTES:

1. THE EXISTENCE AND LOCATION OF ANY UNDERGROUND UTILITY PIPES OR STRUCTURES SHOWN ON THESE PLANS HAVE BEEN OBTAINED BY A SEARCH OF THE AVAILABLE RECORDS.
2. FOR COMPLETE RIGHT OF WAY AND ACCURATE ACCESS DATA, SEE RIGHT OF WAY RECORD MAPS AT DISTRICT OFFICE.

ABBREVIATIONS:

AC	ASBESTOS CEMENT
CATV	CABLE TELEVISION
CL&C	CEMENT LINED AND COATED
CML	CEMENT MORTAR LINED
CML&C	CEMENT MORTAR LINED AND COATED
DIP	DUCTILE IRON PIPE
Dist	DISTRIBUTION
KV	KILO VOLT
Trans	TRANSMISSION
UG	UNDERGROUND (Exist)

LEGEND:

- UTILITY POTHOLE LOCATION
- POTHOLE NUMBER

UTILITY OWNERSHIP ON THIS PROJECT:

COLL	CITY OF LOMA LINDA
COSB	CITY OF SAN BERNARDINO
SCE	SOUTHERN CALIFORNIA EDISON
SCG	SOUTHERN CALIFORNIA GAS COMPANY
TWC	TIME WARNER CABLE
	GAGE CANAL COMPANY
	VERIZON

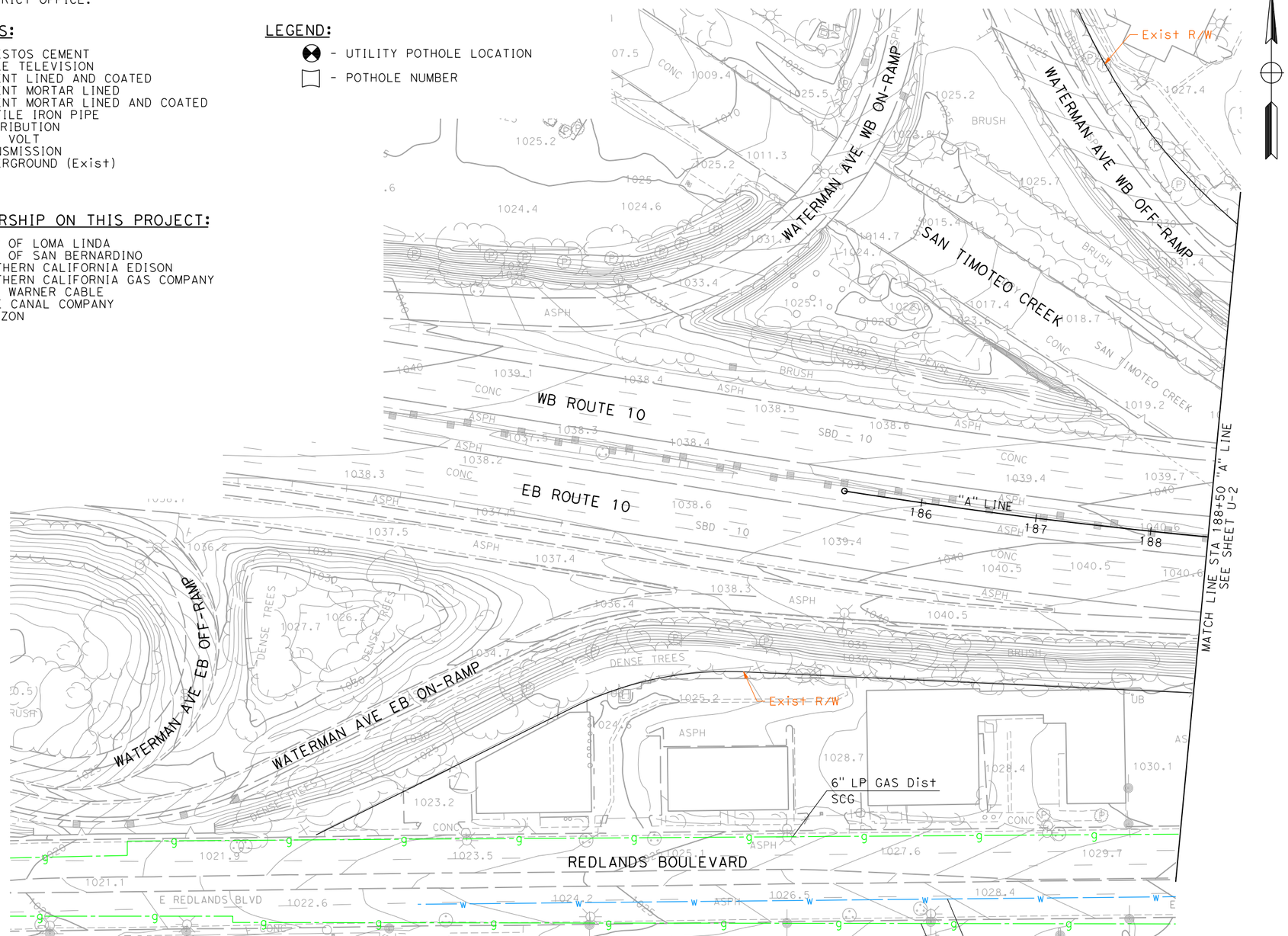

UTILITY PLAN

SCALE 1" = 50'

U- 1

THIS PLAN ACCURATE FOR UTILITY INFORMATION ONLY.

STATE OF CALIFORNIA - DEPARTMENT OF TRANSPORTATION

Caltrans

CONSULTANT FUNCTIONAL SUPERVISOR

CALCULATED-DESIGNED BY

CHECKED BY

REVISED BY

DATE REVISED

LAST REVISION 00-00-00

DATE PLOTTED => $DATE

TIME PLOTTED => $TIME

Dist	COUNTY	ROUTE	POST MILES TOTAL PROJECT	SHEET No.	TOTAL SHEETS
08	SBd	10	25.3/27.3		

REGISTERED CIVIL ENGINEER DATE

PLANS APPROVAL DATE

REGISTERED PROFESSIONAL ENGINEER No. Exp. CIVIL STATE OF CALIFORNIA

THE STATE OF CALIFORNIA OR ITS OFFICERS OR AGENTS SHALL NOT BE RESPONSIBLE FOR THE ACCURACY OR COMPLETENESS OF SCANNED COPIES OF THIS PLAN SHEET.

SANBAG
1170 W. 3rd Street
2nd Floor
San Bernardino, CA 92410

RMC, INC.
6 Hutton Centre Drive
Suite 1250
Santa Ana, CA 92707

NOTES:
1. THE EXISTENCE AND LOCATION OF ANY UNDERGROUND UTILITY PIPES OR STRUCTURES SHOWN ON THESE PLANS HAVE BEEN OBTAINED BY A SEARCH OF THE AVAILABLE RECORDS.
2. FOR COMPLETE RIGHT OF WAY AND ACCURATE ACCESS DATA, SEE RIGHT OF WAY RECORD MAPS AT DISTRICT OFFICE.

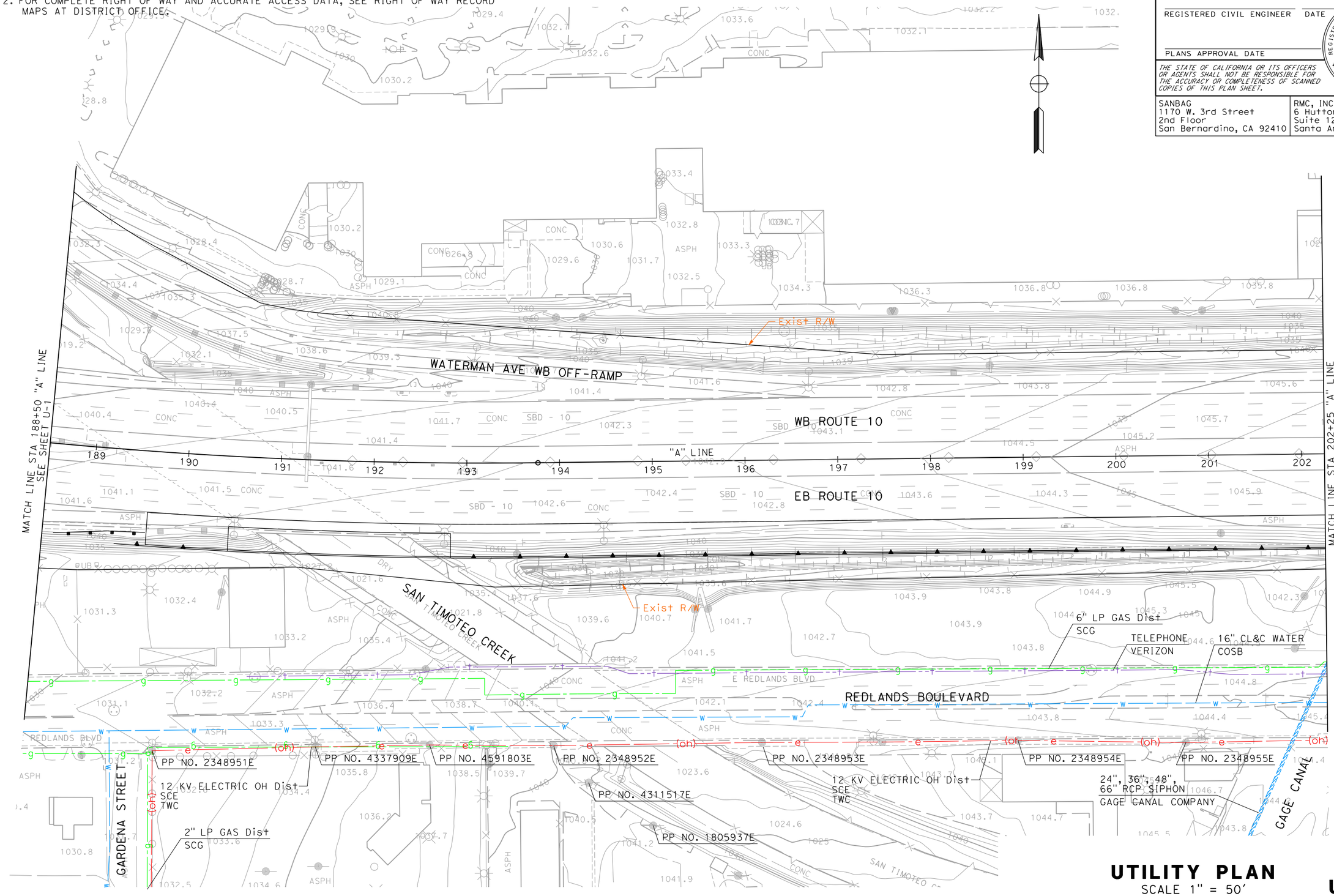

UTILITY PLAN

SCALE 1" = 50'

U-2

THIS PLAN ACCURATE FOR UTILITY INFORMATION ONLY.

REVISED BY | DATE REVISED

CALCULATED-DESIGNED BY | CHECKED BY

CONSULTANT FUNCTIONAL SUPERVISOR

STATE OF CALIFORNIA - DEPARTMENT OF TRANSPORTATION

Caltrans

LAST REVISION 00-00-00 | DATE PLOTTED => $DATE | TIME PLOTTED => $TIME

BORDER LAST REVISED 4/11/2008 | RELATIVE BORDER SCALE IS IN INCHES 0 1 2 3 | USERNAME => $USER | DGN FILE => $REQUEST | CU 08250 | EA 448100

Dist	COUNTY	ROUTE	POST MILES TOTAL PROJECT	SHEET No.	TOTAL SHEETS
08	SBd	10	25.3/27.3		

REGISTERED CIVIL ENGINEER DATE

PLANS APPROVAL DATE

REGISTERED PROFESSIONAL ENGINEER No. Exp. CIVIL STATE OF CALIFORNIA

THE STATE OF CALIFORNIA OR ITS OFFICERS OR AGENTS SHALL NOT BE RESPONSIBLE FOR THE ACCURACY OR COMPLETENESS OF SCANNED COPIES OF THIS PLAN SHEET.

SANBAG
1170 W. 3rd Street
2nd Floor
San Bernardino, CA 92410

RMC, INC.
6 Hutton Centre Drive
Suite 1250
Santa Ana, CA 92707

NOTES:

1. THE EXISTENCE AND LOCATION OF ANY UNDERGROUND UTILITY PIPES OR STRUCTURES SHOWN ON THESE PLANS HAVE BEEN OBTAINED BY A SEARCH OF THE AVAILABLE RECORDS.
2. FOR COMPLETE RIGHT OF WAY AND ACCURATE ACCESS DATA, SEE RIGHT OF WAY RECORD MAPS AT DISTRICT OFFICE.

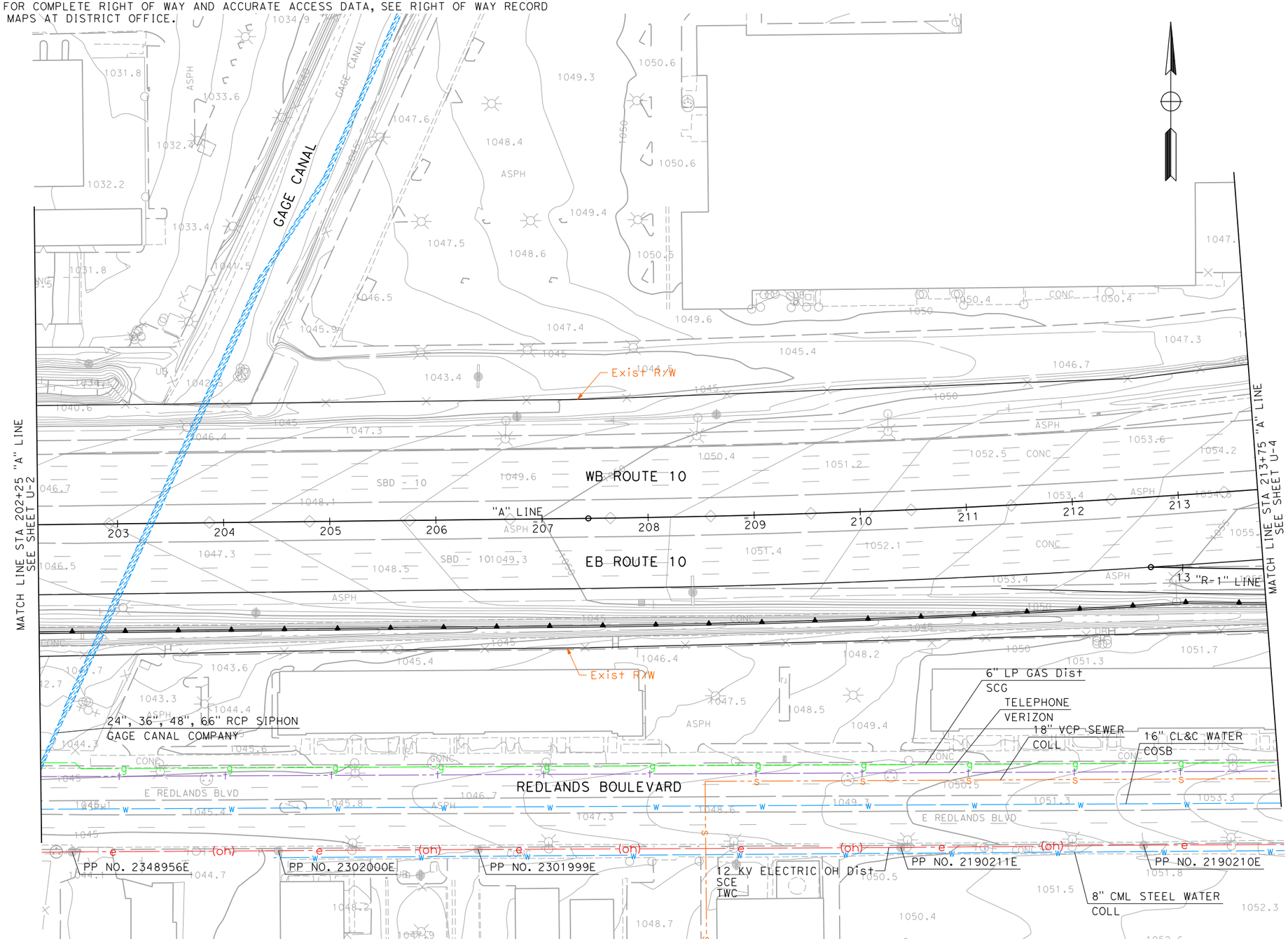

UTILITY PLAN

SCALE 1" = 50'

U-3

THIS PLAN ACCURATE FOR UTILITY INFORMATION ONLY.

STATE OF CALIFORNIA - DEPARTMENT OF TRANSPORTATION

Caltrans

CONSULTANT FUNCTIONAL SUPERVISOR

CALCULATED-DESIGNED BY

CHECKED BY

REVISED BY

DATE REVISED

LAST REVISION 00-00-00

DATE PLOTTED => $DATE

TIME PLOTTED => $TIME

Dist	COUNTY	ROUTE	POST MILES TOTAL PROJECT	SHEET No.	TOTAL SHEETS
08	SBd	10	25.3/27.3		

REGISTERED CIVIL ENGINEER DATE

PLANS APPROVAL DATE

REGISTERED PROFESSIONAL ENGINEER No. Exp. CIVIL STATE OF CALIFORNIA

THE STATE OF CALIFORNIA OR ITS OFFICERS OR AGENTS SHALL NOT BE RESPONSIBLE FOR THE ACCURACY OR COMPLETENESS OF SCANNED COPIES OF THIS PLAN SHEET.

SANBAG
1170 W. 3rd Street
2nd Floor
San Bernardino, CA 92410

RMC, INC.
6 Hutton Centre Drive
Suite 1250
Santa Ana, CA 92707

NOTES:

1. THE EXISTENCE AND LOCATION OF ANY UNDERGROUND UTILITY PIPES OR STRUCTURES SHOWN ON THESE PLANS HAVE BEEN OBTAINED BY A SEARCH OF THE AVAILABLE RECORDS.
2. FOR COMPLETE RIGHT OF WAY AND ACCURATE ACCESS DATA, SEE RIGHT OF WAY RECORD MAPS AT DISTRICT OFFICE.

POTHOLE LOCATION TABLE

No.	UTILITY	ALIGNMENT	STATION	OFFSET	NORTHING	EASTING	Elev	DEPTH
1	2" LP GAS (SCG Dist)	"R" LINE	19+40.00	37.85' Rt	XXXXXXX.XX	XXXXXXX.XX	ZZZ.ZZ'	Z.ZZ'

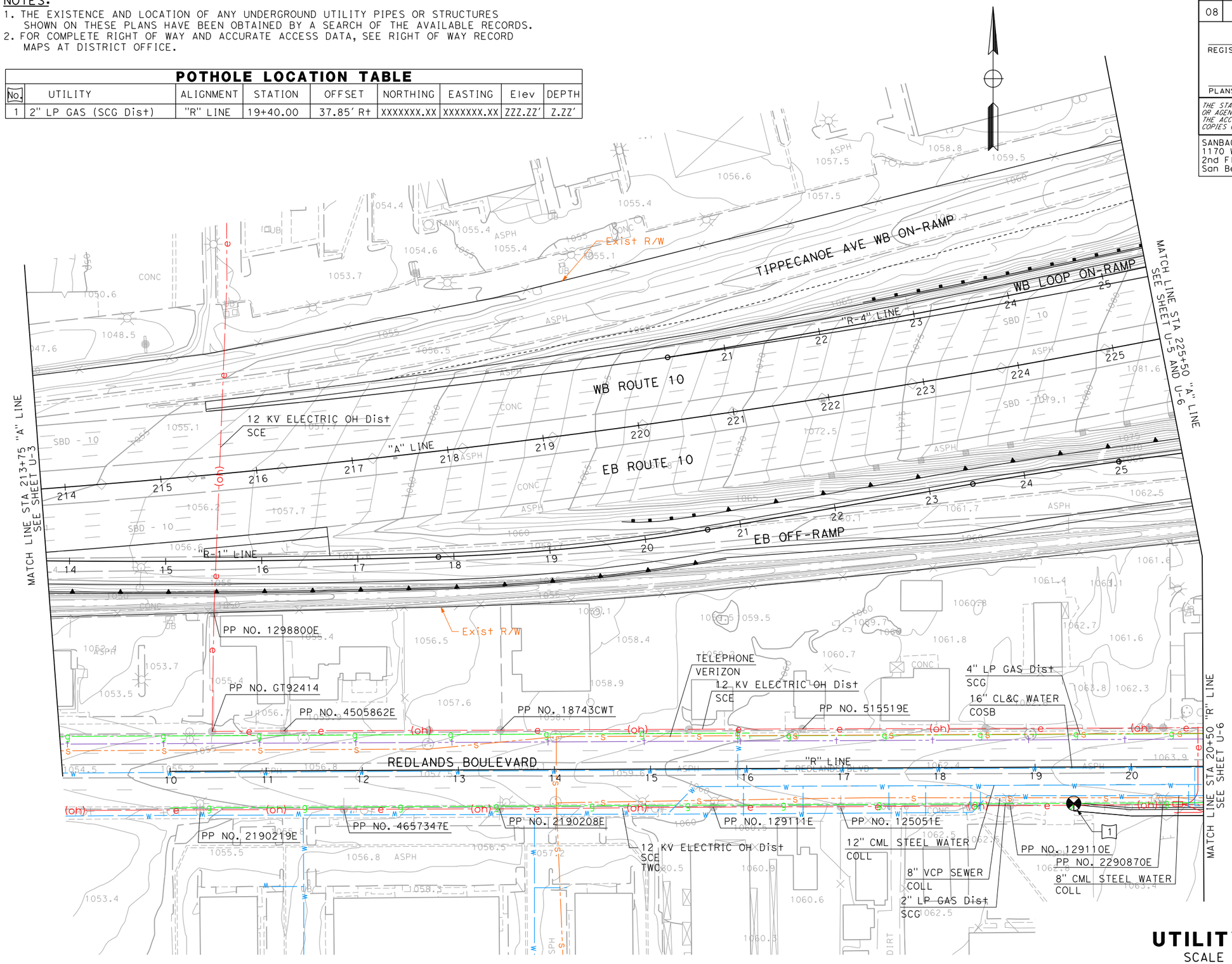

UTILITY PLAN

SCALE 1" = 50'

U-4

THIS PLAN ACCURATE FOR UTILITY INFORMATION ONLY.

STATE OF CALIFORNIA - DEPARTMENT OF TRANSPORTATION

Caltrans

CONSULTANT FUNCTIONAL SUPERVISOR

CALCULATED-DESIGNED BY

CHECKED BY

REVISED BY

DATE REVISED

LAST REVISION 00-00-00

DATE PLOTTED => $DATE
TIME PLOTTED => $TIME

Dist	COUNTY	ROUTE	POST MILES TOTAL PROJECT	SHEET No.	TOTAL SHEETS
08	SBd	10	25.3/27.3		

REGISTERED CIVIL ENGINEER DATE

PLANS APPROVAL DATE

REGISTERED PROFESSIONAL ENGINEER No. Exp. CIVIL STATE OF CALIFORNIA

THE STATE OF CALIFORNIA OR ITS OFFICERS OR AGENTS SHALL NOT BE RESPONSIBLE FOR THE ACCURACY OR COMPLETENESS OF SCANNED COPIES OF THIS PLAN SHEET.

SANBAG
1170 W. 3rd Street
2nd Floor
San Bernardino, CA 92410

RMC, INC.
6 Hutton Centre Drive
Suite 1250
Santa Ana, CA 92707

NOTES:

1. THE EXISTENCE AND LOCATION OF ANY UNDERGROUND UTILITY PIPES OR STRUCTURES SHOWN ON THESE PLANS HAVE BEEN OBTAINED BY A SEARCH OF THE AVAILABLE RECORDS.
2. FOR COMPLETE RIGHT OF WAY AND ACCURATE ACCESS DATA, SEE RIGHT OF WAY RECORD MAPS AT DISTRICT OFFICE.

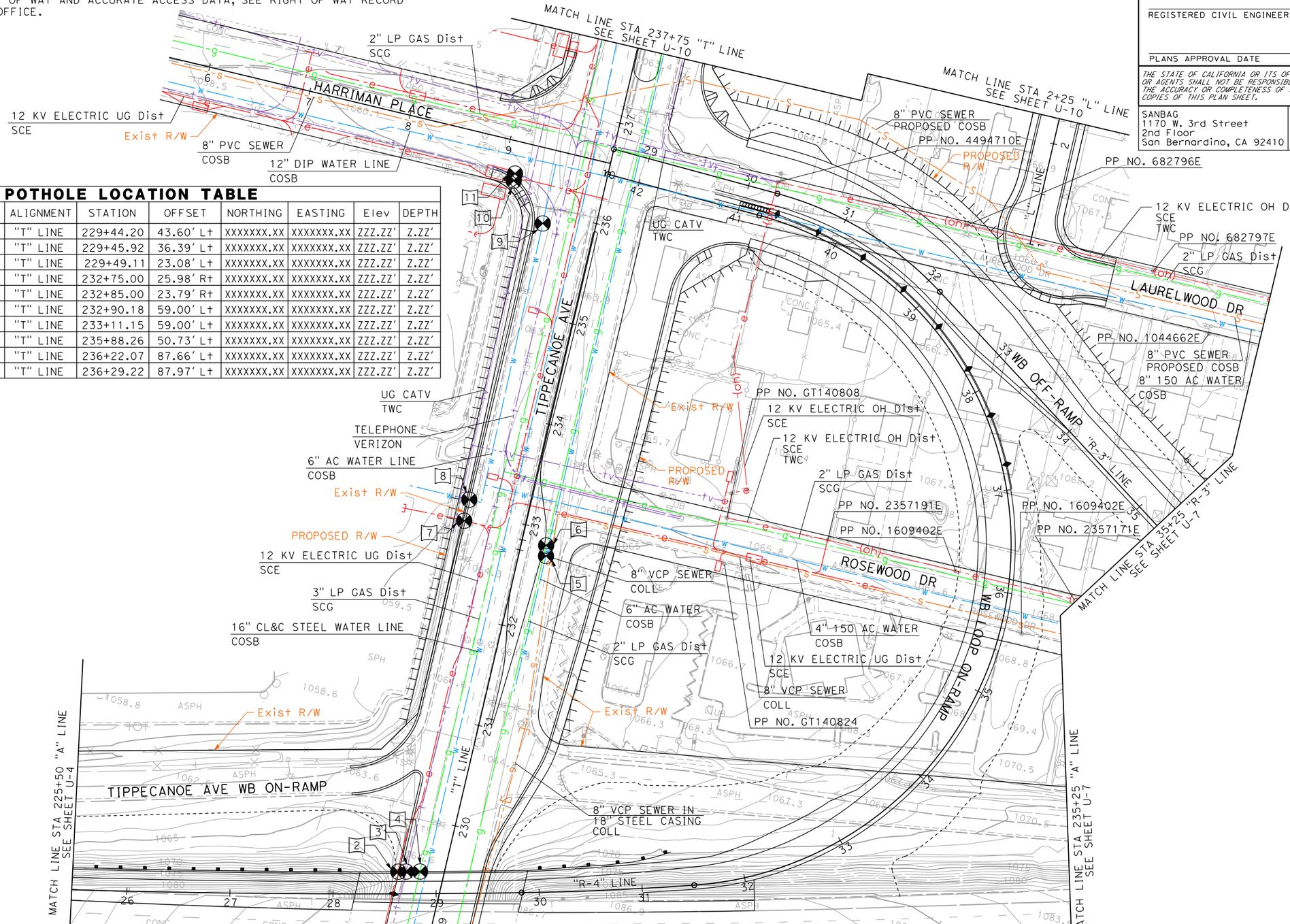

POTHOLE LOCATION TABLE

No.	UTILITY	ALIGNMENT	STATION	OFFSET	NORTHING	EASTING	Elev	DEPTH
2	ELECTRIC UG (SCE Dist)	"T" LINE	229+44.20	43.60' Lt	XXXXXXX.XX	XXXXXXX.XX	ZZZ.ZZ'	Z.ZZ'
3	TELEPHONE (VERIZON)	"T" LINE	229+45.92	36.39' Lt	XXXXXXX.XX	XXXXXXX.XX	ZZZ.ZZ'	Z.ZZ'
4	3" LP GAS (SCG Dist)	"T" LINE	229+49.11	23.08' Lt	XXXXXXX.XX	XXXXXXX.XX	ZZZ.ZZ'	Z.ZZ'
5	6" WATER (COSB)	"T" LINE	232+75.00	25.98' Rt	XXXXXXX.XX	XXXXXXX.XX	ZZZ.ZZ'	Z.ZZ'
6	2" LP GAS (SCG Dist)	"T" LINE	232+85.00	23.79' Rt	XXXXXXX.XX	XXXXXXX.XX	ZZZ.ZZ'	Z.ZZ'
7	ELECTRIC UG (SCE Dist)	"T" LINE	232+90.18	59.00' Lt	XXXXXXX.XX	XXXXXXX.XX	ZZZ.ZZ'	Z.ZZ'
8	6" AC WATER (COSB)	"T" LINE	233+11.15	59.00' Lt	XXXXXXX.XX	XXXXXXX.XX	ZZZ.ZZ'	Z.ZZ'
9	6" AC WATER (COSB)	"T" LINE	235+88.26	50.73' Lt	XXXXXXX.XX	XXXXXXX.XX	ZZZ.ZZ'	Z.ZZ'
10	ELECTRIC UG (SCE Dist)	"T" LINE	236+22.07	87.66' Lt	XXXXXXX.XX	XXXXXXX.XX	ZZZ.ZZ'	Z.ZZ'
11	TELEPHONE (VERIZON)	"T" LINE	236+29.22	87.97' Lt	XXXXXXX.XX	XXXXXXX.XX	ZZZ.ZZ'	Z.ZZ'

UTILITY PLAN

SCALE 1" = 50'

U-5

THIS PLAN ACCURATE FOR UTILITY INFORMATION ONLY.

REVISED BY | DATE REVISED

CALCULATED-DESIGNED BY | CHECKED BY

CONSULTANT FUNCTIONAL SUPERVISOR

STATE OF CALIFORNIA - DEPARTMENT OF TRANSPORTATION

Caltrans

LAST REVISION 00-00-00 | DATE PLOTTED => $DATE | TIME PLOTTED => $TIME

Dist	COUNTY	ROUTE	POST MILES TOTAL PROJECT	SHEET No.	TOTAL SHEETS
08	SBd	10	25.3/27.3		

REGISTERED CIVIL ENGINEER DATE

PLANS APPROVAL DATE

REGISTERED PROFESSIONAL ENGINEER No. Exp. CIVIL STATE OF CALIFORNIA

THE STATE OF CALIFORNIA OR ITS OFFICERS OR AGENTS SHALL NOT BE RESPONSIBLE FOR THE ACCURACY OR COMPLETENESS OF SCANNED COPIES OF THIS PLAN SHEET.

SANBAG
1170 W. 3rd Street
2nd Floor
San Bernardino, CA 92410

RMC, INC.
6 Hutton Centre Drive
Suite 1250
Santa Ana, CA 92707

NOTES:

1. THE EXISTENCE AND LOCATION OF ANY UNDERGROUND UTILITY PIPES OR STRUCTURES SHOWN ON THESE PLANS HAVE BEEN OBTAINED BY A SEARCH OF THE AVAILABLE RECORDS.
2. FOR COMPLETE RIGHT OF WAY AND ACCURATE ACCESS DATA, SEE RIGHT OF WAY RECORD MAPS AT DISTRICT OFFICE.

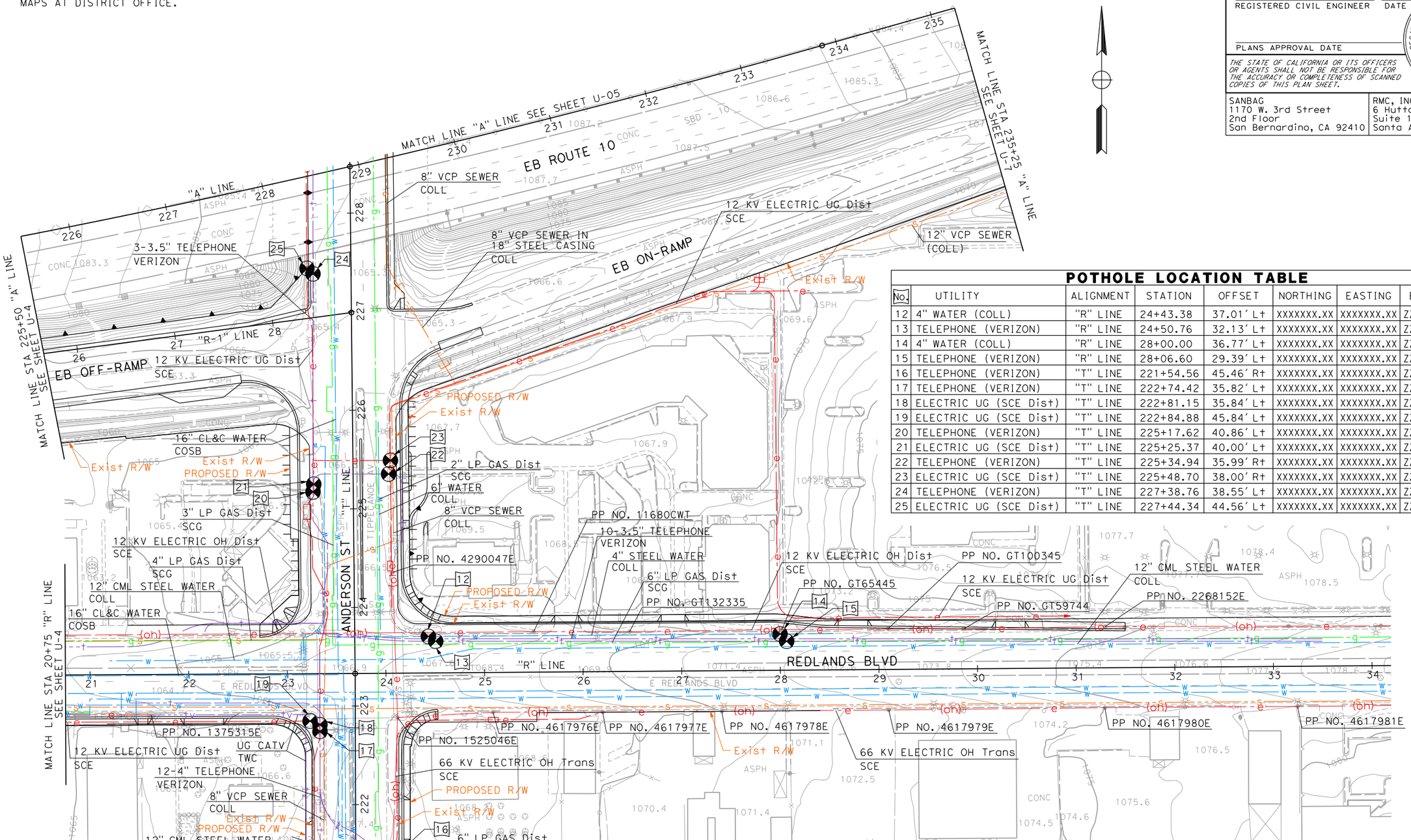

POTHOLE LOCATION TABLE

No.	UTILITY	ALIGNMENT	STATION	OFFSET	NORTHING	EASTING	Elev	DEPTH
12	4" WATER (COLL)	"R" LINE	24+43.38	37.01' Lt	XXXXXXX.XX	XXXXXXX.XX	ZZZ.ZZ'	Z.ZZ'
13	TELEPHONE (VERIZON)	"R" LINE	24+50.76	32.13' Lt	XXXXXXX.XX	XXXXXXX.XX	ZZZ.ZZ'	Z.ZZ'
14	4" WATER (COLL)	"R" LINE	28+00.00	36.77' Lt	XXXXXXX.XX	XXXXXXX.XX	ZZZ.ZZ'	Z.ZZ'
15	TELEPHONE (VERIZON)	"R" LINE	28+06.60	29.39' Lt	XXXXXXX.XX	XXXXXXX.XX	ZZZ.ZZ'	Z.ZZ'
16	TELEPHONE (VERIZON)	"T" LINE	221+54.56	45.46' Rt	XXXXXXX.XX	XXXXXXX.XX	ZZZ.ZZ'	Z.ZZ'
17	TELEPHONE (VERIZON)	"T" LINE	222+74.42	35.82' Lt	XXXXXXX.XX	XXXXXXX.XX	ZZZ.ZZ'	Z.ZZ'
18	ELECTRIC UG (SCE Dist)	"T" LINE	222+81.15	35.84' Lt	XXXXXXX.XX	XXXXXXX.XX	ZZZ.ZZ'	Z.ZZ'
19	ELECTRIC UG (SCE Dist)	"T" LINE	222+84.88	45.84' Lt	XXXXXXX.XX	XXXXXXX.XX	ZZZ.ZZ'	Z.ZZ'
20	TELEPHONE (VERIZON)	"T" LINE	225+17.62	40.86' Lt	XXXXXXX.XX	XXXXXXX.XX	ZZZ.ZZ'	Z.ZZ'
21	ELECTRIC UG (SCE Dist)	"T" LINE	225+25.37	40.00' Lt	XXXXXXX.XX	XXXXXXX.XX	ZZZ.ZZ'	Z.ZZ'
22	TELEPHONE (VERIZON)	"T" LINE	225+34.94	35.99' Rt	XXXXXXX.XX	XXXXXXX.XX	ZZZ.ZZ'	Z.ZZ'
23	ELECTRIC UG (SCE Dist)	"T" LINE	225+48.70	38.00' Rt	XXXXXXX.XX	XXXXXXX.XX	ZZZ.ZZ'	Z.ZZ'
24	TELEPHONE (VERIZON)	"T" LINE	227+38.76	38.55' Lt	XXXXXXX.XX	XXXXXXX.XX	ZZZ.ZZ'	Z.ZZ'
25	ELECTRIC UG (SCE Dist)	"T" LINE	227+44.34	44.56' Lt	XXXXXXX.XX	XXXXXXX.XX	ZZZ.ZZ'	Z.ZZ'

UTILITY PLAN

SCALE 1" = 50'

U- 6

THIS PLAN ACCURATE FOR UTILITY INFORMATION ONLY.

REVISED BY | DATE REVISED

CALCULATED-DESIGNED BY | CHECKED BY

CONSULTANT FUNCTIONAL SUPERVISOR

STATE OF CALIFORNIA - DEPARTMENT OF TRANSPORTATION

Caltrans

LAST REVISION 00-00-00 | DATE PLOTTED => $DATE | TIME PLOTTED => $TIME

Dist	COUNTY	ROUTE	POST MILES TOTAL PROJECT	SHEET No.	TOTAL SHEETS
08	SBd	10	25.3/27.3		

REGISTERED CIVIL ENGINEER DATE

PLANS APPROVAL DATE

REGISTERED PROFESSIONAL ENGINEER No. Exp. CIVIL STATE OF CALIFORNIA

THE STATE OF CALIFORNIA OR ITS OFFICERS OR AGENTS SHALL NOT BE RESPONSIBLE FOR THE ACCURACY OR COMPLETENESS OF SCANNED COPIES OF THIS PLAN SHEET.

SANBAG
1170 W. 3rd Street
2nd Floor
San Bernardino, CA 92410

RMC, INC.
6 Hutton Centre Drive
Suite 1250
Santa Ana, CA 92707

NOTES:

1. THE EXISTENCE AND LOCATION OF ANY UNDERGROUND UTILITY PIPES OR STRUCTURES SHOWN ON THESE PLANS HAVE BEEN OBTAINED BY A SEARCH OF THE AVAILABLE RECORDS.
2. FOR COMPLETE RIGHT OF WAY AND ACCURATE ACCESS DATA, SEE RIGHT OF WAY RECORD MAPS AT DISTRICT OFFICE.

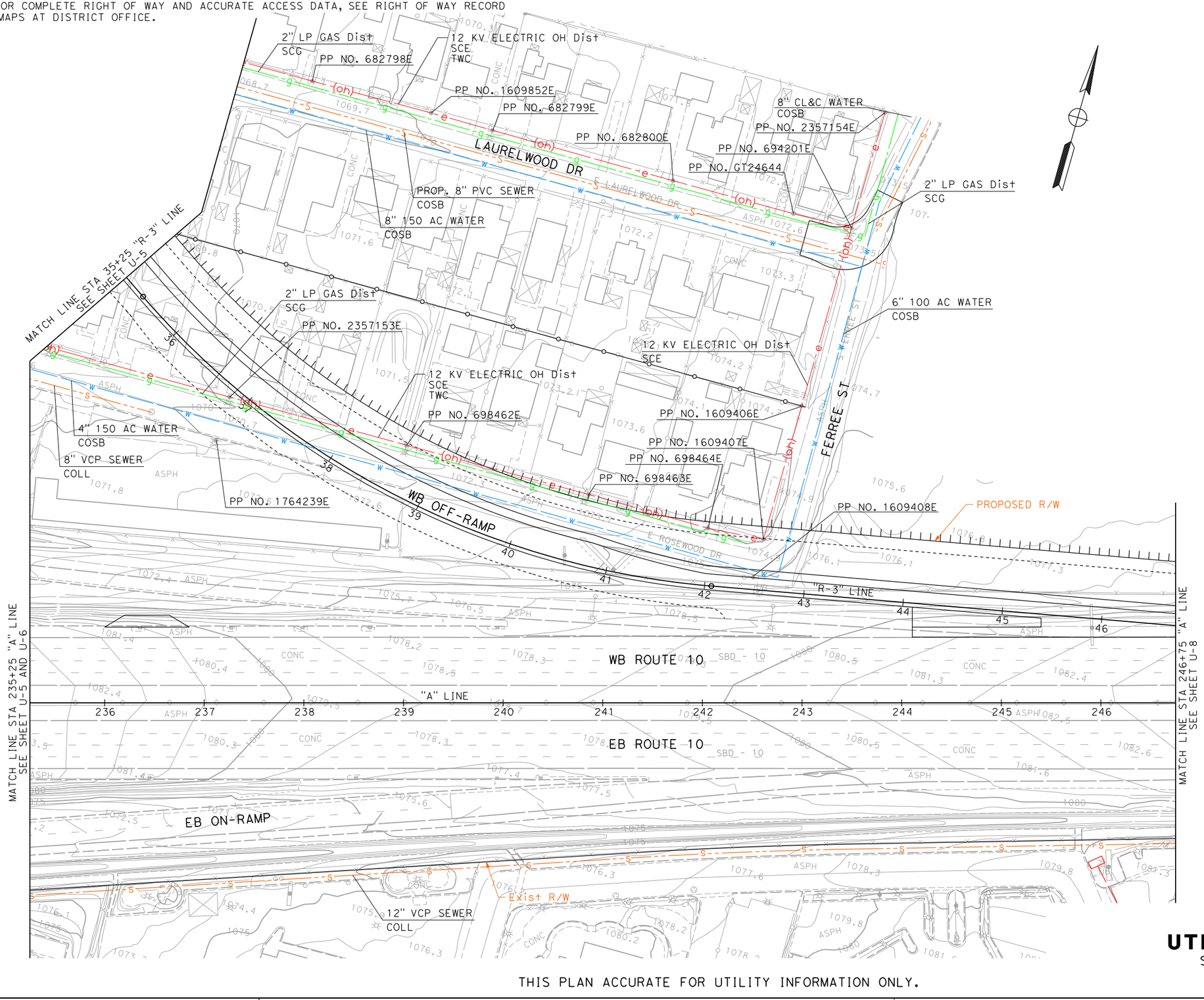

UTILITY PLAN

SCALE 1" = 50'

U- 7

THIS PLAN ACCURATE FOR UTILITY INFORMATION ONLY.

STATE OF CALIFORNIA - DEPARTMENT OF TRANSPORTATION

Caltrans

CONSULTANT FUNCTIONAL SUPERVISOR

CALCULATED-DESIGNED BY

CHECKED BY

REVISED BY

DATE REVISED

LAST REVISION 00-00-00

DATE PLOTTED => $DATE

TIME PLOTTED => $TIME

Dist	COUNTY	ROUTE	POST MILES TOTAL PROJECT	SHEET No.	TOTAL SHEETS
08	SBd	10	25.3/27.3		

REGISTERED CIVIL ENGINEER DATE

PLANS APPROVAL DATE

REGISTERED PROFESSIONAL ENGINEER No. Exp. CIVIL STATE OF CALIFORNIA

THE STATE OF CALIFORNIA OR ITS OFFICERS OR AGENTS SHALL NOT BE RESPONSIBLE FOR THE ACCURACY OR COMPLETENESS OF SCANNED COPIES OF THIS PLAN SHEET.

SANBAG
1170 W. 3rd Street
2nd Floor
San Bernardino, CA 92410

RMC, INC.
6 Hutton Centre Drive
Suite 1250
Santa Ana, CA 92707

NOTES:

1. THE EXISTENCE AND LOCATION OF ANY UNDERGROUND UTILITY PIPES OR STRUCTURES SHOWN ON THESE PLANS HAVE BEEN OBTAINED BY A SEARCH OF THE AVAILABLE RECORDS.
2. FOR COMPLETE RIGHT OF WAY AND ACCURATE ACCESS DATA, SEE RIGHT OF WAY RECORD MAPS AT DISTRICT OFFICE.

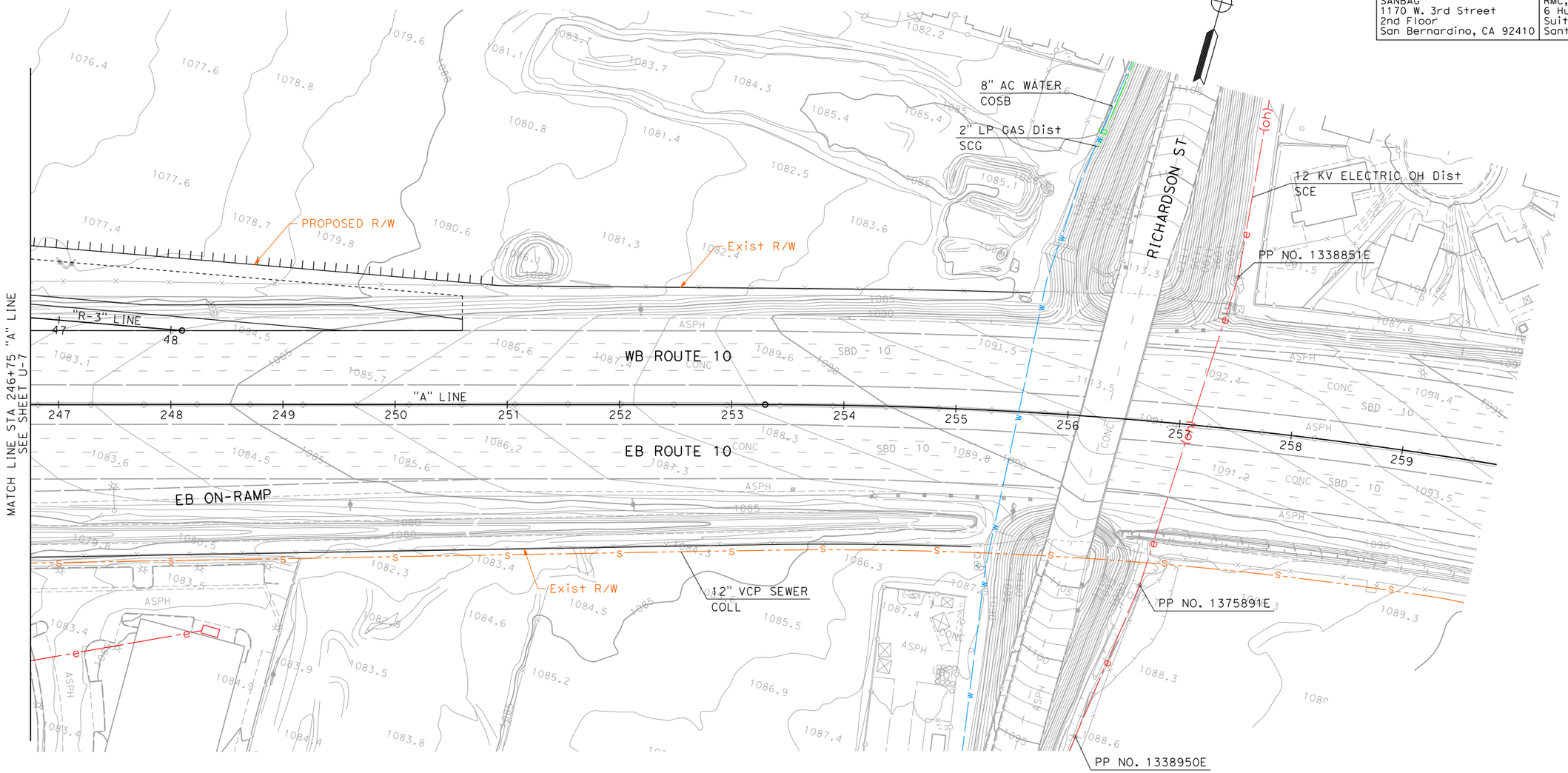

UTILITY PLAN

SCALE 1" = 50'

U- 8

THIS PLAN ACCURATE FOR UTILITY INFORMATION ONLY.

STATE OF CALIFORNIA - DEPARTMENT OF TRANSPORTATION

Caltrans

CONSULTANT FUNCTIONAL SUPERVISOR

CALCULATED-DESIGNED BY

CHECKED BY

REVISED BY

DATE REVISED

LAST REVISION 00-00-00

DATE PLOTTED => $DATE
TIME PLOTTED => $TIME

Dist	COUNTY	ROUTE	POST MILES TOTAL PROJECT	SHEET No.	TOTAL SHEETS
08	SBd	10	25.3/27.3		

REGISTERED CIVIL ENGINEER DATE

PLANS APPROVAL DATE

REGISTERED PROFESSIONAL ENGINEER No. Exp. CIVIL STATE OF CALIFORNIA

THE STATE OF CALIFORNIA OR ITS OFFICERS OR AGENTS SHALL NOT BE RESPONSIBLE FOR THE ACCURACY OR COMPLETENESS OF SCANNED COPIES OF THIS PLAN SHEET.

SANBAG
1170 W. 3rd Street
2nd Floor
San Bernardino, CA 92410

RMC, INC.
6 Hutton Centre Drive
Suite 1250
Santa Ana, CA 92707

NOTES:

1. THE EXISTENCE AND LOCATION OF ANY UNDERGROUND UTILITY PIPES OR STRUCTURES SHOWN ON THESE PLANS HAVE BEEN OBTAINED BY A SEARCH OF THE AVAILABLE RECORDS.
2. FOR COMPLETE RIGHT OF WAY AND ACCURATE ACCESS DATA, SEE RIGHT OF WAY RECORD MAPS AT DISTRICT OFFICE.

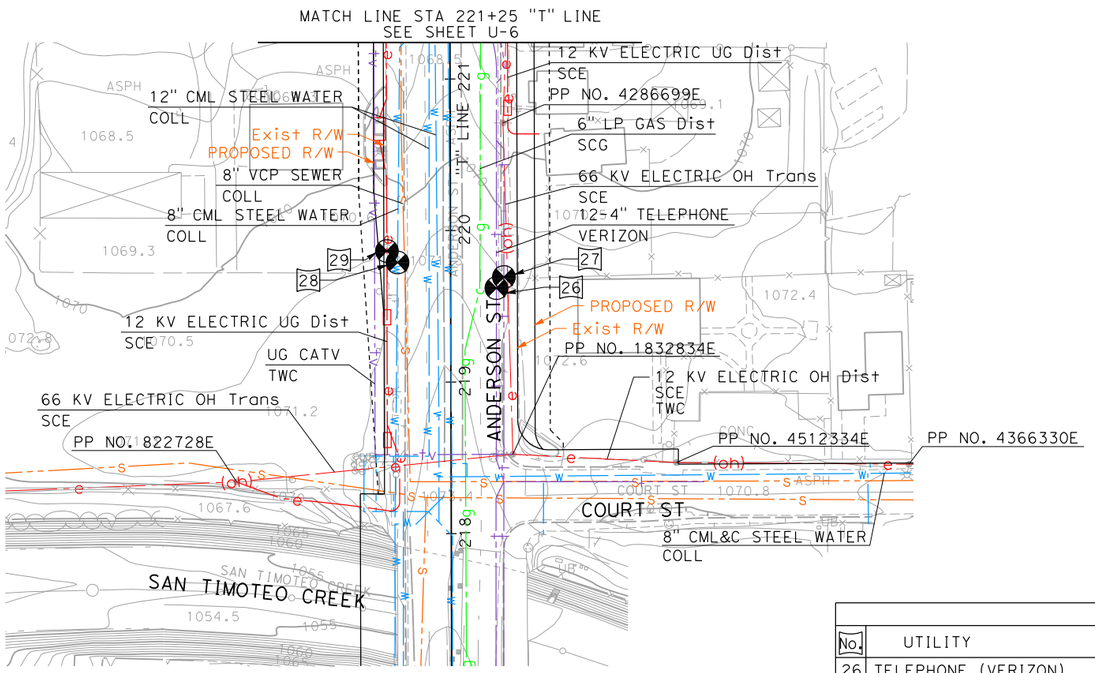

POTHOLE LOCATION TABLE

No.	UTILITY	ALIGNMENT	STATION	OFFSET	NORTHING	EASTING	Elev	DEPTH
26	TELEPHONE (VERIZON)	"T" LINE	219+61.95	30.19' Rt	XXXXXXX.XX	XXXXXXX.XX	ZZZ.ZZ'	Z.ZZ'
27	TELEPHONE (VERIZON)	"T" LINE	219+69.27	35.18' Rt	XXXXXXX.XX	XXXXXXX.XX	ZZZ.ZZ'	Z.ZZ'
28	8" WATER (COLL)	"T" LINE	219+79.02	34.99' Lt	XXXXXXX.XX	XXXXXXX.XX	ZZZ.ZZ'	Z.ZZ'
29	ELECTRIC UG (SCE Dist)	"T" LINE	219+86.65	42.00' Lt	XXXXXXX.XX	XXXXXXX.XX	ZZZ.ZZ'	Z.ZZ'

UTILITY PLAN

SCALE 1" = 50'

U- 9

THIS PLAN ACCURATE FOR UTILITY INFORMATION ONLY.

STATE OF CALIFORNIA - DEPARTMENT OF TRANSPORTATION

Caltrans

CONSULTANT FUNCTIONAL SUPERVISOR

CALCULATED-DESIGNED BY

CHECKED BY

REVISED BY

DATE REVISED

LAST REVISION 00-00-00

DATE PLOTTED => $DATE
TIME PLOTTED => $TIME

Dist	COUNTY	ROUTE	POST MILES TOTAL PROJECT	SHEET No.	TOTAL SHEETS
08	SBd	10	25.3/27.3		

REGISTERED CIVIL ENGINEER DATE

PLANS APPROVAL DATE

REGISTERED PROFESSIONAL ENGINEER No. Exp. CIVIL STATE OF CALIFORNIA

THE STATE OF CALIFORNIA OR ITS OFFICERS OR AGENTS SHALL NOT BE RESPONSIBLE FOR THE ACCURACY OR COMPLETENESS OF SCANNED COPIES OF THIS PLAN SHEET.

SANBAG
1170 W. 3rd Street
2nd Floor
San Bernardino, CA 92410

RMC, INC.
6 Hutton Centre Drive
Suite 1250
Santa Ana, CA 92707

NOTES:
1. THE EXISTENCE AND LOCATION OF ANY UNDERGROUND UTILITY PIPES OR STRUCTURES SHOWN ON THESE PLANS HAVE BEEN OBTAINED BY A SEARCH OF THE AVAILABLE RECORDS.
2. FOR COMPLETE RIGHT OF WAY AND ACCURATE ACCESS DATA, SEE RIGHT OF WAY RECORD MAPS AT DISTRICT OFFICE.

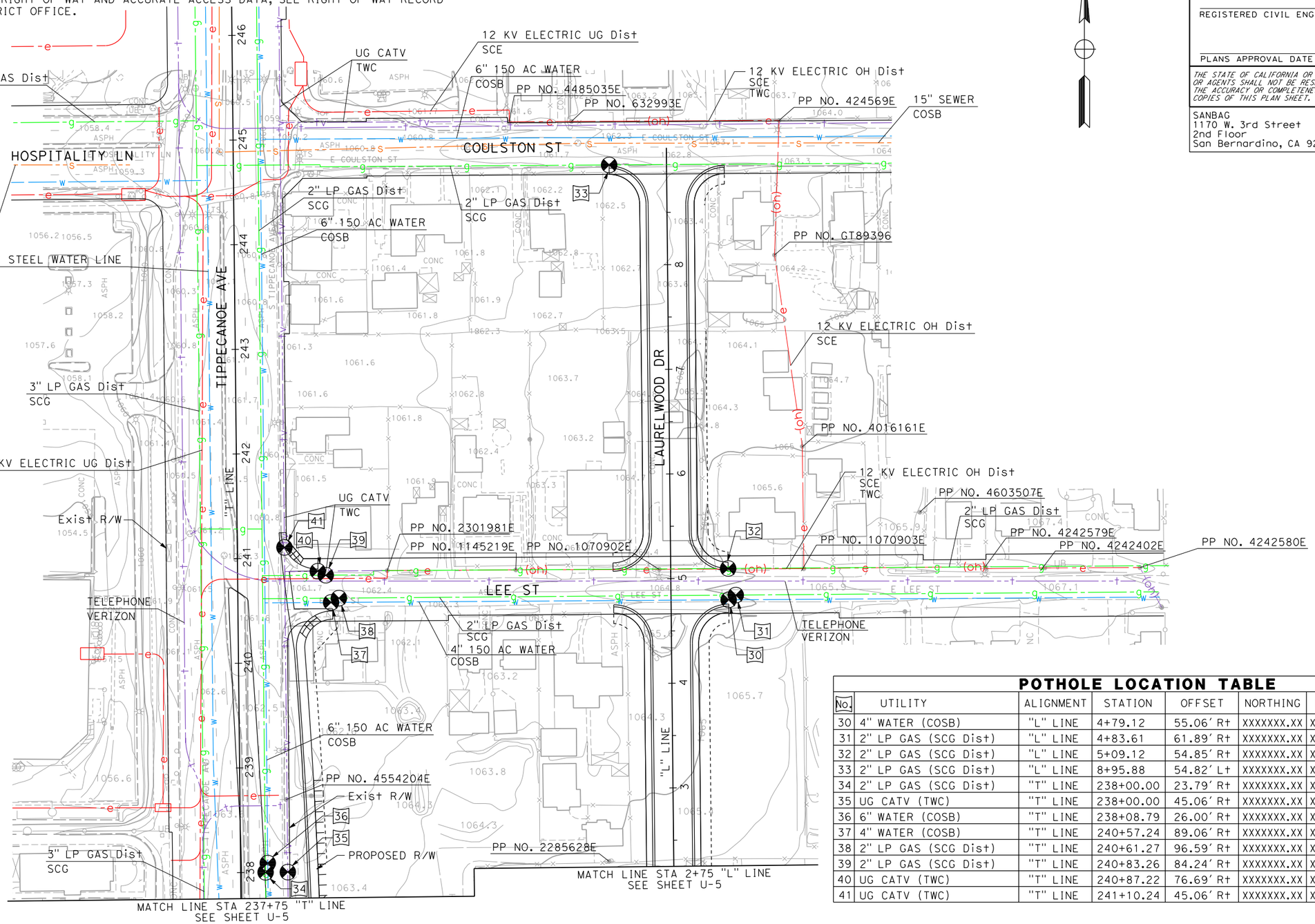

POTHOLE LOCATION TABLE

NO.	UTILITY	ALIGNMENT	STATION	OFFSET	NORTHING	EASTING	Elev	DEPTH
30	4" WATER (COSB)	"L" LINE	4+79.12	55.06' R+	XXXXXXX.XX	XXXXXXX.XX	ZZZ.ZZ'	Z.ZZ'
31	2" LP GAS (SCG Dist)	"L" LINE	4+83.61	61.89' R+	XXXXXXX.XX	XXXXXXX.XX	ZZZ.ZZ'	Z.ZZ'
32	2" LP GAS (SCG Dist)	"L" LINE	5+09.12	54.85' R+	XXXXXXX.XX	XXXXXXX.XX	ZZZ.ZZ'	Z.ZZ'
33	2" LP GAS (SCG Dist)	"L" LINE	8+95.88	54.82' L+	XXXXXXX.XX	XXXXXXX.XX	ZZZ.ZZ'	Z.ZZ'
34	2" LP GAS (SCG Dist)	"T" LINE	238+00.00	23.79' R+	XXXXXXX.XX	XXXXXXX.XX	ZZZ.ZZ'	Z.ZZ'
35	UG CATV (TWC)	"T" LINE	238+00.00	45.06' R+	XXXXXXX.XX	XXXXXXX.XX	ZZZ.ZZ'	Z.ZZ'
36	6" WATER (COSB)	"T" LINE	238+08.79	26.00' R+	XXXXXXX.XX	XXXXXXX.XX	ZZZ.ZZ'	Z.ZZ'
37	4" WATER (COSB)	"T" LINE	240+57.24	89.06' R+	XXXXXXX.XX	XXXXXXX.XX	ZZZ.ZZ'	Z.ZZ'
38	2" LP GAS (SCG Dist)	"T" LINE	240+61.27	96.59' R+	XXXXXXX.XX	XXXXXXX.XX	ZZZ.ZZ'	Z.ZZ'
39	2" LP GAS (SCG Dist)	"T" LINE	240+83.26	84.24' R+	XXXXXXX.XX	XXXXXXX.XX	ZZZ.ZZ'	Z.ZZ'
40	UG CATV (TWC)	"T" LINE	240+87.22	76.69' R+	XXXXXXX.XX	XXXXXXX.XX	ZZZ.ZZ'	Z.ZZ'
41	UG CATV (TWC)	"T" LINE	241+10.24	45.06' R+	XXXXXXX.XX	XXXXXXX.XX	ZZZ.ZZ'	Z.ZZ'

UTILITY PLAN
SCALE 1" = 50'

U-10

THIS PLAN ACCURATE FOR UTILITY INFORMATION ONLY.

REVISED BY | DATE REVISED
CALCULATED-DESIGNED BY | CHECKED BY
CONSULTANT FUNCTIONAL SUPERVISOR
STATE OF CALIFORNIA - DEPARTMENT OF TRANSPORTATION
Caltrans

LAST REVISION 00-00-00 | DATE PLOTTED => $DATE | TIME PLOTTED => $TIME

ATTACHMENT H

Landscaping Concept

Landscape Concept Plan Proposals

Interstate 10 /Tippecanoe Avenue
08-SBd-10 PM 25.3/27.3 / EA 448100
June 2010

Legend

- Concept Exhibit 'A' & 'C' Areas
- Impact Areas to Existing Plantings
- Existing Landscape Areas to be Removed
- Proposed Vegetated 'Grassy' Swales
- Proposed Sound Wall

Prepared by: LDP Design Group
Landscape Architecture

Aerial Photo Showing Proposed Roadway Improvements

Landscape Planning Goals:

Enhance Sense of Place

- PROVIDE PLANTINGS THAT REFLECT THE REGIONAL SETTING AND COMMUNITY CHARACTER.

Create Sense of Arrival-Gateways

- CREATE ENTRY LANDSCAPE STATEMENT TO ENHANCE CITY IDENTITY.
- ENHANCE MAJOR INTERSECTIONS.

Comply with Latest State Requirements

- CALTRANS ROUTE 10 CORRIDOR MASTER PLAN
- STATE ASSEMBLY BILL 1881 (WATER EFFICIENCY).

Sustainable Landscape Solutions

- SELECT MATERIALS THAT REDUCE MAINTENANCE COST.
- INCORPORATE “GREEN BUILDING” MATERIALS IN DESIGN.
- SPECIFY DROUGHT TOLERANT PLANTINGS.
- USE LOCAL SOURCE MATERIALS.
- REUSE RUNOFF WHERE POSSIBLE

Landscape Concept Goals

Existing Landscape Elements And Streetscape Character

Existing Landscape Elements

Streetscape Character

Monument Signage

Rock Cobble Medians

Benches

Date Palms at Corners

Dry Creek Bed

Hedge Plantings to Screen Parking

Mexican Fan Palms in Parkways

Existing Landscape

Existing Landscape Elements

Planting Areas Within the Caltrans R/W

Entry of I-10 West Bound On-Ramp (North Side)

I-10 West Bound Off-Ramp at Tippecanoe (North Side)

I-10 East Bound Off-Ramp (South Side)

I-10 East Bound On-Ramp (South Side)

I-10 East Bound On-Ramp (South Side)

Existing Landscape

Existing Landscape Elements
Impacted Neighborhoods

Lee Street at Tippecanoe Looking East

Rosewood Drive Looking West to Tippecanoe

Laurel Wood Street Looking West to Tippecanoe

Laurel Wood Street Looking West to Tippecanoe

Existing Landscape

Caltrans I-10 Corridor Master Plan

Corridor Master Plan RTE 10

Project Areas

In order to better understand the setting and resources within the Corridor, review of the existing conditions within and along Route 10 has led to the following conclusions:

Existing Conditions on the Corridor
Travel through the Route 10 Corridor provides the viewer with four distinct images
of the project area. The visibility of common images allows for identification of
separate segments as follows:

•Area A - The western segment from the Los Angeles County line to the Etiwanda Wash just east of the I-15 Interchange

•Area C - The eastern segment from the Santa
Ana River to Tippecanoe Avenue in Redlands

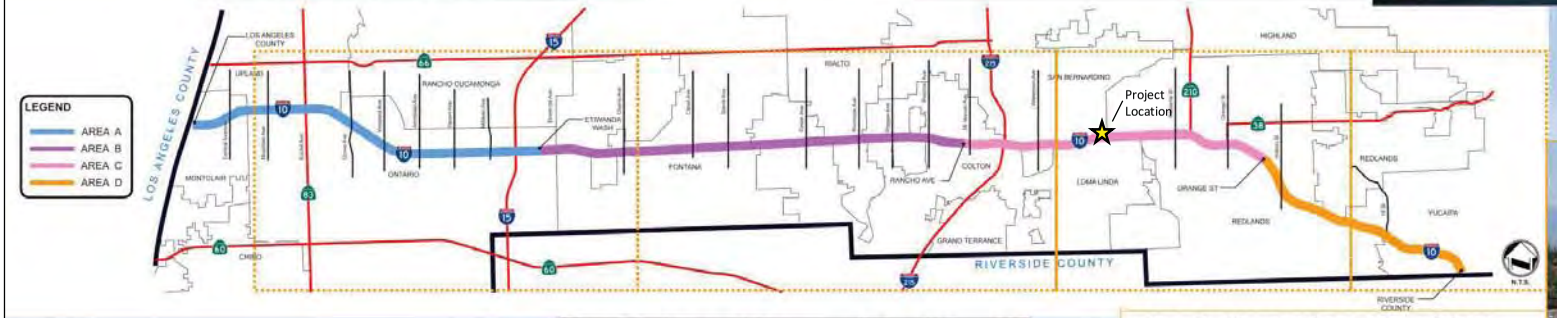

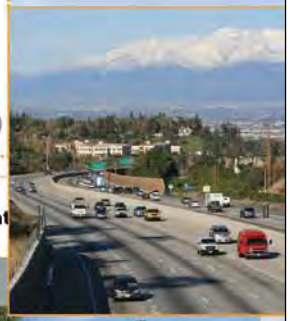

•Area B - The central segment from Etiwanda Wash to the Santa Ana River

•Area D - The southeastern end from Tippecanoe Avenue to the Riverside Count line

Caltrans I-10 Corridor Master Plan (Progress Plan Example Only)

IV- DESIGN GUIDELINES

LANDSCAPE DESIGN ELEMENTS

Hardscape Iner/ Materials –

Gore areas and narrow areas to be paved with the following materials:

- Gravel Mulch shall be used as erosion control for color, texture.

- Rock Blanket shall be used for areas where maintenance access is not available.

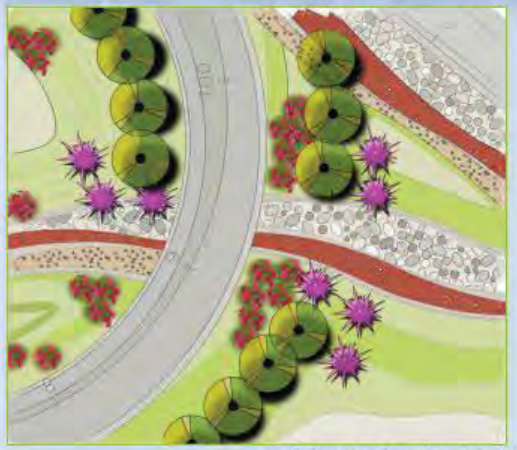

Erosion Control –

Sediment and erosion control shall be achieved through the provision of gravel mulch and or planting groundcover.

On steep slopes where erosion would be a concern, mid-slope retaining walls shall be provided to provide areas for landscaping or to avoid the need for an impervious flat surface.

Landscape Concept Plan Proposals

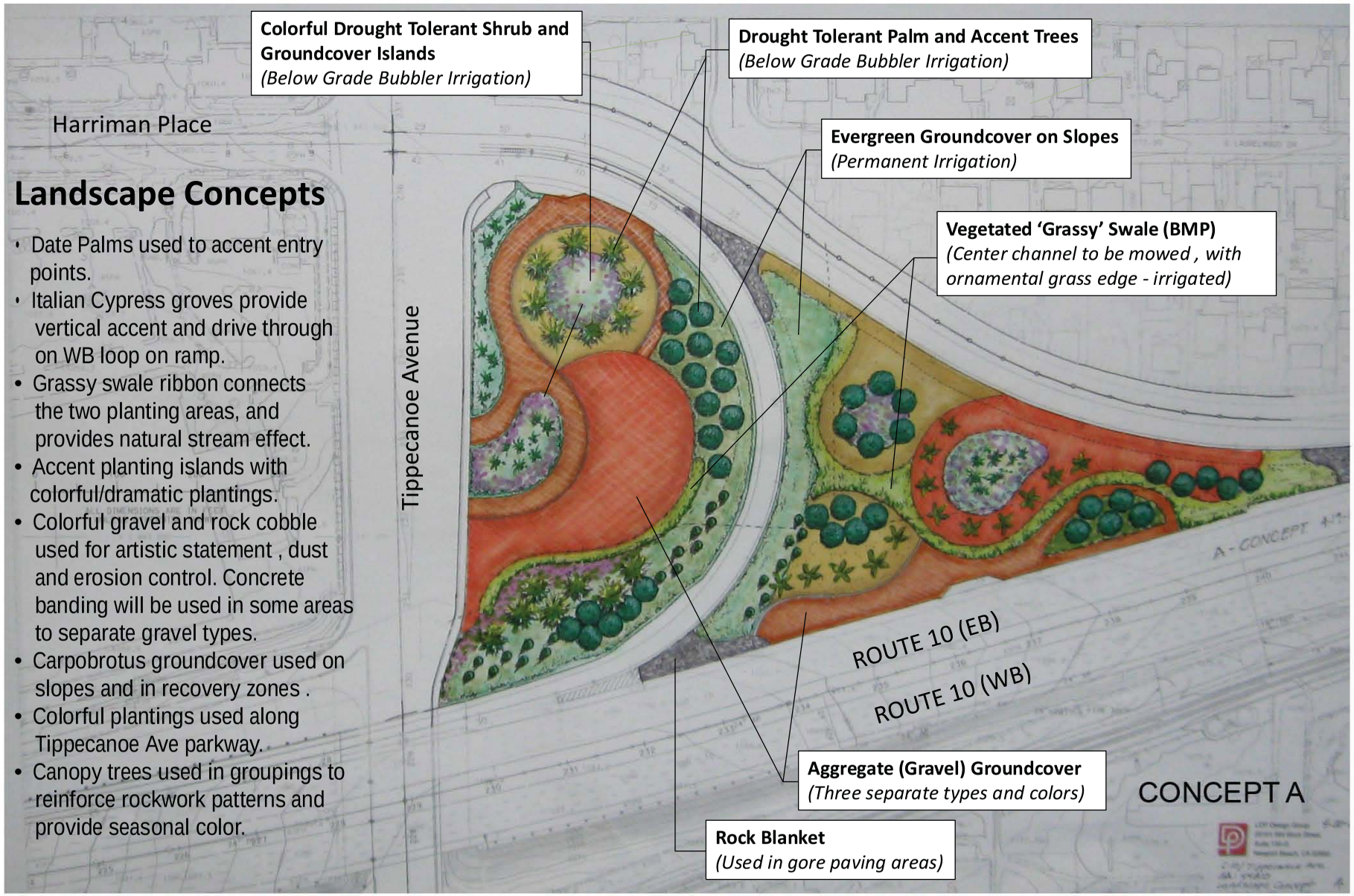

- Date Palms used to accent entry points.
- Italian Cypress groves provide vertical accent and drive through on WB loop on ramp.
- Grassy swale ribbon connects the two planting areas, and provides natural stream effect.
- Accent planting islands with colorful/dramatic plantings.
- Colorful gravel and rock cobble used for artistic statement , dust and erosion control. Concrete banding will be used in some areas to separate gravel types.
- Carpobrotus groundcover used on slopes and in recovery zones .
- Colorful plantings used along Tippecanoe Ave parkway.
- Canopy trees used in groupings to reinforce rockwork patterns and provide seasonal color.

Proposed Landscape Concept Plan "A"

Harriman Place

Landscape Concepts

- Date Palm groves used to accent entry points.
- Mexican Fan Palms integrated into grassy BMP swale to simulate natural palm oasis effect.
- Groves of canopy trees and shrubs used on slopes to screen loop ramp traffic and provide green backdrop to gravel treatments and palm oasis.
- Grassy swale includes five collection fields connected by drain pipe.
- Accent tree, shrub and groudcover plantings are interwoven with colored gravel patterns.
- Colorful gravel and rock cobble used for artistic statement , dust and erosion control.
- Carpobrotus groundcover used on slopes and in recovery zones .
- Rock blanket used in gore area and to reinforce colored gravel patterns.
- 18" wide concrete banding used to separate gravel types and add visual interest.

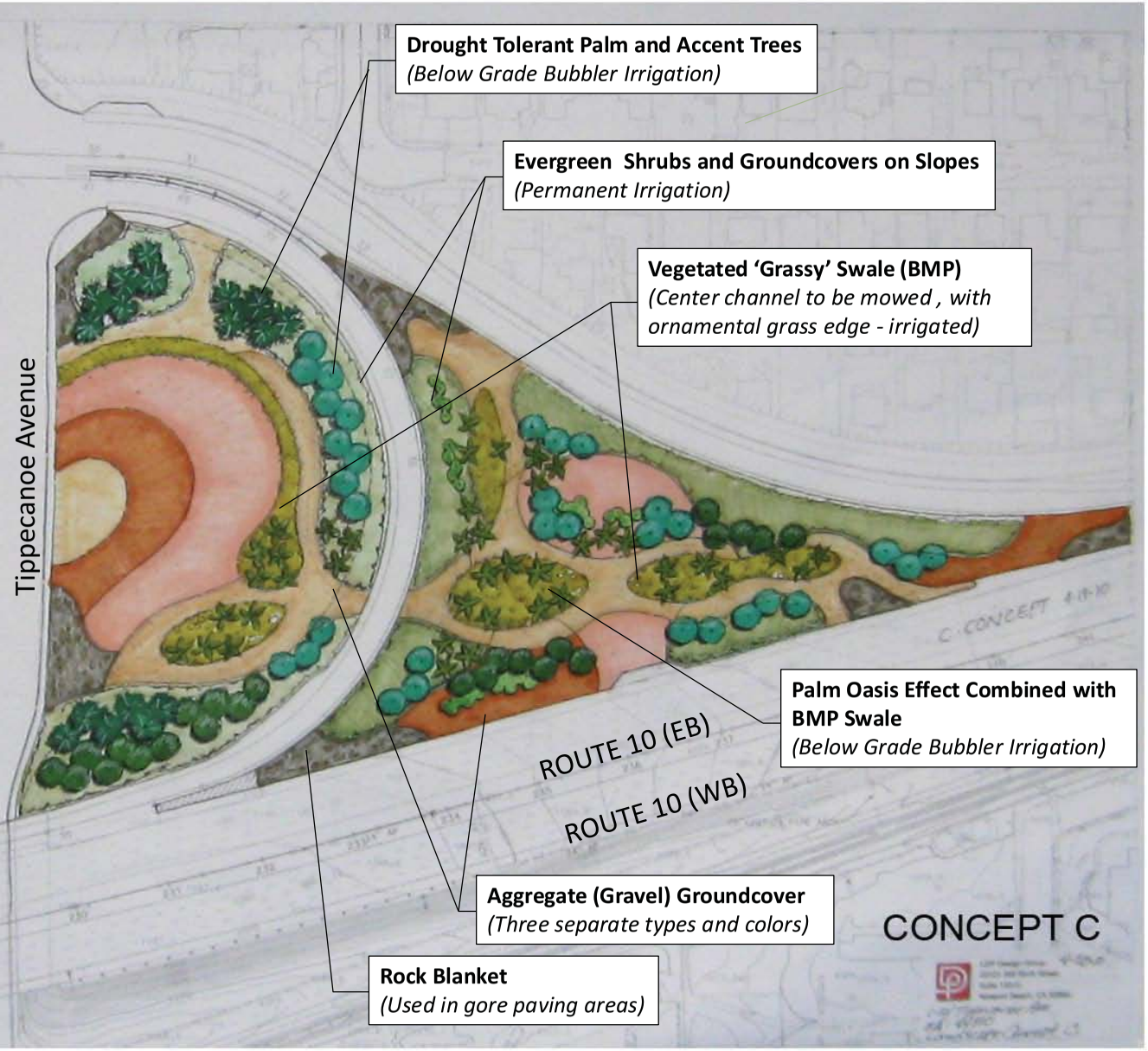

Proposed Landscape Concept Plan "C"

Proposed Plant Materials

Mexican Fan Palm
Washingtonia robusta

Date Palm
Phoenix dactilifera

Canary Island Pine
Pinus canariensis

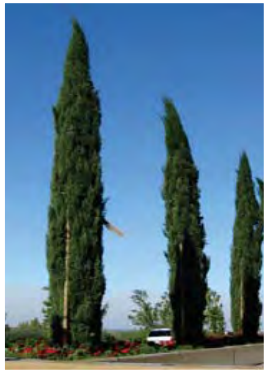

Italian Cypress
Cupressus sempervirens

Palo Verde Tree
Cercidium 'Desert Museum'

Camphor Tree
Cinnamomum camphora

Crape Myrtle
Lagerstroemia f. 'Muskogee"

Bottle Tree
Brachychiton populneus

Trees

Vine

Boston Ivy
Parthenocissus tricuspidata
(deciduous)

Plant Suitability Index
USDA Zone: 9b – 10a
Sunset Zone: 18
Average Low Range: 22 to 17 degrees
Growth Season: March thru November

Weber's Agave
Agave

Blue Agave
Agave Americana

Tree Aloe
Aloe arborescens

Accent Plants

Mexican Feather Grass
Nassella ten….

Bush Muhly
Miscanthus….

Regal Mist Bush Muhly
Miscanthus….

Ornamental Grass Varieties

(used to enhance some "grassy" BMP swale edges)

Grass Types for Mowing

(Vegetated "grassy" BMP swale channel)

- **Buffalo Grass – Buchloe dactyloides**
- **Festuca rubra – Creeping Red Fescue**

Bougainvillea 'Moneth'

Bougainvillea
'Oo-la-la'

Bougainvillea 'Rosanka'

Ice Plant – Carpobrotus edulus

Dalea
Dalea capitata "Sierra Gold"

Groundcover Plants

ATTACHMENT I

Storm Water Data Report (Cover)

Caltrans

Dist-County-Route: **8-SBd-10**

Post Mile (Kilometer Post) Limits:
PM 25.3/27.3 (KP 40.7/43.9)

Project Type: **Interchange Improvements on I-10 at Tippecanoe Avenue**

EA: **08-44810**

RU: **250**

Program Identification: **010.680 / 400.146**

Phase: ☐PID ☒PA/ED ☐PS&E

Regional Water Quality Control Board(s): **Region 8 – Santa Ana**

Is the project required to consider incorporating Treatment BMPs? ☒Yes ☐No

If yes, can Treatment BMPs be incorporated into the project? ☒Yes ☐No

If No, a Technical Data Report must be submitted to the RWQCB at least 60 days prior to PS&E Submittal. List submittal date: _____

Total Disturbed Soil Area: **20.4 Acres**

Estimated Construction Start Date: **10/1/2012** Construction Completion Date: **3/31/2014**

Notification of Construction (NOC) Date to be submitted: **9/1/2012**

Notification of ADL reuse (if Yes, provide date) ☐Yes Date: _____ ☒No

Separate Dewatering Permit (if Yes, permit number) ☐Yes Permit #: _____ ☒No

This Report has been prepared under the direction of the following Licensed Person. The Licensed Person attests to the technical information contained herein and the data upon which recommendations, conclusions, and decisions are based. Professional Engineer or Landscape Architect stamp required at PS&E.

Michael Han, *Registered Project Engineer* — 1/11/11 Date

I have reviewed the storm water quality design issues and find this report to be complete, current, and accurate:

REGISTERED PROFESSIONAL ENGINEER
Michael C. Han
No 61893
Exp 9/30/11
CIVIL
STATE OF CALIFORNIA

Meardey Tim, *Project Manager* — 1/13/11 Date

Cindy Gano, *Designated Maintenance Representative* — 1/17/11 Date

Ray Desselle, *Designated Landscape Architect Representative* — 1/19/11 Date

Cathy Jochai, *District/Regional SW Coordinator or Designee* — 1/19/11 Date

ATTACHMENT J

Project Cost Estimate

PROJECT REPORT
COST ESTIMATE

08-SBd-10-25.3/27.3
08-448100

Project Description I-10/Tippecanoe Avenue Interchange Improvement Project

Limits 08-Sbd-10-25.3/27.3

EA/Program 448100

Proposed Improvement (Scope) Modify I-10/Tippecanoe Avenue Interchange Includes Ramps and Local Arterial Streets Improvements

Alternative Alternative 1 - Preferred Alternative

SUMMARY OF PROJECT COST ESTIMATE

	Current	Escalated *
TOTAL ROADWAY ITEMS	$27,406,000	$28,513,000
TOTAL STRUCTURE ITEMS	$3,815,000	$3,969,000
SUBTOTAL CONSTRUCTION COST	$31,221,000	$32,482,000
TOTAL RIGHT OF WAY ITEMS	$32,143,000	$33,442,000
TOTAL PROJECT COST	**$63,364,000**	**$65,924,000**
SUPPORT COSTS **		
PS&E	$3,848,000	$3,848,000
RIGHT-OF-WAY	$2,735,000	$2,735,000
CONSTRUCTION MANAGEMENT	$4,371,000	$4,371,000
TOTAL COST	**$74,318,000**	**$76,878,000**

** Escalation is assumed to be 2% per year for two (2) years*
*** Support costs are not escalated*

Prepared By _____ 1/14/2011
Project Engineer Date

Reviewed By _____ 1/14/2011
Project Manager Date

PROJECT REPORT
COST ESTIMATE

08-Sbd-10-25.3/27.3
08-448100

I. ROADWAY ITEMS

Section 1 Earthwork	Quantity	Unit	Unit Price	Item Cost	Section Cost
Roadway Excavation	33,200	CY	$20	$664,000	
Imported Borrow	52,800	CY	$23	$1,214,400	
Drainage Structure Excavation	32,300	CY	$40	$1,292,000	
Clearing & Grubbing	1	LS	$100,000	$100,000	
Obliterate Surfacing	10,000	SY	$2.50	$25,000	
				Subtotal	$3,295,400

Section 2 Pavement Structural Section	Quantity	Unit	Unit Price	Item Cost	Section Cost
Jointed Plain Concrete Pavement	5,200	CY	$200	$1,040,000	
Hot Mix Asphalt (Type A)	16,500	Ton	$80	$1,320,000	
Hot Mix Asphalt (Type A Bond Breaker)	900	Ton	$90	$81,000	
Lean Concrete Base	2,400	CY	$90	$216,000	
Aggregate Base Class 2	13,000	CY	$35	$455,000	
Aggregate Subbase Class 2	9,800	CY	$25	$245,000	
				Subtotal	$3,357,000

Section 3 Drainage	Quantity	Unit	Unit Price	Item Cost	Section Cost
Project Drainage	1	LS	$3,830,000	$3,830,000	
				Subtotal	$3,830,000

PROJECT REPORT
COST ESTIMATE

08-Sbd-10-25.3/27.3
08-448100

I. ROADWAY ITEMS

Section 4 Specialty Items	Quantity	Unit	Unit Price	Item Cost	Section Cost
Retaining Walls	1	LS	$1,800,000	$1,800,000	
Sound Walls	1	LS	$680,000	$680,000	
Minor Concrete (Curb and Gutter)	610	CY	$400	$244,000	
Minor Concrete (Sidewalk)	440	CY	$350	$154,000	
Concrete Barriers	600	LF	$250	$150,000	
Metal Beam Guardrail	1,100	LF	$30	$33,000	
R/W Fences	6,200	LF	$15	$93,000	
SWPPP	1	LS	$30,000	$30,000	
Water Pollution Control	1	LS	$400,000	$400,000	
Temporary Shoring for RCB Construction	23,000	SF	$20	$460,000	
Highway Planting	1	LS	$715,000	$715,000	
Irrigation	1	LS	$468,000	$468,000	
Environmental Mitigation	1	LS	$150,000	$150,000	
Resident Engineer Office Space	1	LS	$310,000	$310,000	
				Subtotal	$5,687,000

Section 5 Traffic Items	Quantity	Unit	Unit Price	Item Cost	Section Cost
Construction Area Sign	1	LS	$50,000	$50,000	
Traffic Control Systems	1	LS	$600,000	$600,000	
Signals and Interconnect	1	LS	$560,000	$560,000	
Lighting	1	LS	$200,000	$200,000	
Ramp Metering	1	LS	$110,000	$110,000	
Modify Communication System	1	LS	$210,000	$210,000	
Temporary Communication System	1	LS	$50,000	$50,000	
Signing (Overhead and Roadside)	1	LS	$570,000	$570,000	
Pavement Delineation	1	LS	$120,000	$120,000	
Portable Changeable Message Sign	4	EA	$15,000	$60,000	
Temporary Railing (Type K)	12,800	LF	$23	$294,400	
Temporary Traffic Screen	12,800	LF	$2.60	$33,280	
Temporary Crash Cushion Module	140	EA	$300	$42,000	
Transportation Management Plan	1	LS	$265,000	$265,000	
				Subtotal	$3,164,680

TOTAL SECTIONS 1 thru 5	$19,334,080

PROJECT REPORT
COST ESTIMATE

08-Sbd-10-25.3/27.3
08-448100

I. ROADWAY ITEMS

Section 6 Minor Items				Item Cost	Section Cost
Subtotal Sections 1-5	$19,334,080	**x**	5%	$966,704	
				TOTAL MINOR ITEMS	$966,704

Section 7 Roadway Mobilization				Item Cost	Section Cost
Subtotal Sections 1-6	$20,300,784	**x**	10%	$2,030,078	
				TOTAL ROADWAY MOBILIZATION	$2,030,078

Section 8 Roadway Additions				Item Cost	Section Cost
Supplemental Work					
Subtotal Sections 1-6	$20,300,784	**x**	10%	$2,030,078	
Contingencies					
Subtotal Sections 1-6	$20,300,784	**x**	15%	$3,045,118	
				TOTAL ROADWAY ADDITIONS	$5,075,196

TOTAL ROADWAY ITEMS **$27,406,058**
(Subtotal Sections 1 thru 8)

Estimate Prepared By Jimmy Vuong 9/4/09
(Print Name)

Estimate Checked By Joseph Sawtelle 9/4/09

PROJECT REPORT
COST ESTIMATE

08-Sbd-10-25.3/27.3
08-448100

II. STRUCTURES ITEMS

Bridge Name	54-598 TIPPECANOE AVENUE UC (WIDEN)	54-599 SAN TIMOTEO CREEK BRIDGE (WIDEN & RETROFIT)
Structure Type	PC/PS I GIRDER	CIP/PS BOX GIRDER
Width (out to out) - (ft)	25.90	21.50
Span Lengths - (ft)	161.63	180.75
Total Area - (ft^2)	4,461	3,886
Cost Per ft^2 (include 10% mobilization & 25% contingency)	$381.30	$544.00
Total Cost for Structure	$1,701,000	$2,114,000
SUBTOTAL STRUCTURES ITEMS		$3,815,000

TOTAL STRUCTURES ITEMS **$3,815,000**

COMMENTS:
San Timoteo Creek structure area unit cost includes cost for structure retrofit

Estimate Prepared By:

Bob Matthews (Print Name) Phone# (909) 933-5225 Date 9/1/09

PROJECT REPORT
COST ESTIMATE

08-Sbd-10-25.3/27.3
08-448100

III. RIGHT OF WAY ITEMS

A.	Acquisition, including Excess Lands Damages, Goodwill, Major Rehabilitation, and Environmental Permits to Enter	$20,161,000
B.	Acquisition of Offsite Mitigation	$0
C.	Utility Relocation (State share)	$3,025,000
D.	RAP	$1,135,000
E.	Clearance/Demolition	$945,000
F.	Title and Escrow Fees	$119,000
G.	Project Permit Fees	$5,000
H.	Condemnation Costs	$6,708,000
I.	Real Property Services - Routine Maintenance	$45,000

TOTAL RIGHT OF WAY ITEMS **$32,143,000**

Anticipated Date of Right of Way Certification 10/2012

COMMENTS:

Estimate Prepared By:

Betty Bobosik, District 8 Right-of-Way Phone# (909) 383-4696 Date 1/13/11
(Print Name)

ATTACHMENT K

Rejected Alternatives

PSR (PDS) ALTERNATIVE 2

Caltrans Metric

DIST	COUNTY	ROUTE	KILOMETER POST TOTAL PROJECT	SHEET No	TOTAL SHEETS
08	SBd	10	40.7 / 43.9		

REGISTERED CIVIL ENGINEER

PLANS APPROVAL DATE

REGISTERED PROFESSIONAL ENGINEER No. Exp. CIVIL STATE OF CALIFORNIA

TETRA TECH, INC.
348 WEST HOSPITALITY LANE,
SUITE 100,
SAN BERNARDINO, CA 92408

The State of California or its officers or agents shall not be responsible for the accuracy or completeness of electronic copies of this plan sheet.

PSR(PDS) ALTERNATIVE 2

SCALE 1:1500

L-1

	DATE	REVISED BY
CALCULATED/ DESIGNED BY	6/99	
CHECKED BY	6/99	DATE REVISED

DESIGN OVERSIGHT
XXXXXXXXXX

STATE OF CALIFORNIA - DEPARTMENT OF TRANSPORTATION
Caltrans

LAST REVISION XX-XX-XX
DATE PLOTTED => 10/3/2008
TIME PLOTTED => 11:17:27 AM

FORM DC-OE-91-PF (REV. 3/88)

FOR REDUCED PLANS ORIGINAL SCALE IS IN MILLIMETERS 0 20 40 60 80

DGN FILE => p:\p02432\0005\cadd\rejected alternatives\psralt2-1.dgn

CU

EA 44810

DIST	COUNTY	ROUTE	KILOMETER POST TOTAL PROJECT	SHEET No	TOTAL SHEETS
08	SBd	10	40.7 / 43.9		

Caltrans Metric

REGISTERED CIVIL ENGINEER

PLANS APPROVAL DATE

REGISTERED PROFESSIONAL ENGINEER No. Exp. CIVIL STATE OF CALIFORNIA

TETRA TECH, INC.
348 WEST HOSPITALITY LANE,
SUITE 100,
SAN BERNARDINO, CA 92408

The State of California or its officers or agents shall not be responsible for the accuracy or completeness of electronic copies of this plan sheet.

PSR(PDS) ALTERNATIVE 2

SCALE 1:1500

MATCH LINE
SEE EVANS ST.
FEASIBILITY STUDY

L-2

CALCULATED/ DESIGNED BY	DATE 6/99	REVISED BY
CHECKED BY	6/99	DATE REVISED

DESIGN OVERSIGHT
XXXXXXX

STATE OF CALIFORNIA - DEPARTMENT OF TRANSPORTATION
Caltrans

LAST REVISION XX-XX-XX
DATE PLOTTED => 10/3/2008
TIME PLOTTED => 11:17:30 AM

FORM DC-OE-9I-PF (REV. 3/88)

FOR REDUCED PLANS ORIGINAL SCALE IS IN MILLIMETERS 0 20 40 60 80

DGN FILE => p:\p02432\0005\cadd\rejected alternatives\psralt2-2.dgn

CU

EA 44810

PSR (PDS) ALTERNATIVE 4

DIST	COUNTY	ROUTE	KILOMETER POST TOTAL PROJECT	SHEET No	TOTAL SHEETS
08	SBd	10	40.7 / 43.9		

REGISTERED CIVIL ENGINEER

PLANS APPROVAL DATE

REGISTERED PROFESSIONAL ENGINEER No. Exp. CIVIL STATE OF CALIFORNIA

TETRA TECH, INC.
348 WEST HOSPITALITY LANE,
SUITE 100,
SAN BERNARDINO, CA 92408

The State of California or its officers or agents shall not be responsible for the accuracy or completeness of electronic copies of this plan sheet.

Caltrans Metric

PSR(PDS) ALTERNATIVE 4

SCALE 1:1500

L-1

	CALCULATED/ DESIGNED BY	DATE 6/99	REVISED BY
	CHECKED BY	6/99	DATE REVISED

DESIGN OVERSIGHT
XXXXXXXX

STATE OF CALIFORNIA - DEPARTMENT OF TRANSPORTATION
Caltrans

LAST REVISION XX-XX-XX
DATE PLOTTED => 10/3/2008
TIME PLOTTED => 11:17:41 AM

FORM DC-OE-91-PF (REV. 3/88)

FOR REDUCED PLANS ORIGINAL SCALE IS IN MILLIMETERS 0 20 40 60 80

DGN FILE => p:\p02432\0005\cadd\rejected alternatives\psralt4-1.dgn

CU

EA 44810

DIST	COUNTY	ROUTE	KILOMETER POST TOTAL PROJECT	SHEET No	TOTAL SHEETS
08	SBd	10	40.7 / 43.9		

Caltrans Metric

REGISTERED CIVIL ENGINEER

PLANS APPROVAL DATE

REGISTERED PROFESSIONAL ENGINEER No. Exp. CIVIL STATE OF CALIFORNIA

TETRA TECH, INC.
348 WEST HOSPITALITY LANE,
SUITE 100,
SAN BERNARDINO, CA 92408

The State of California or its officers or agents shall not be responsible for the accuracy or completeness of electronic copies of this plan sheet.

PSR(PDS) ALTERNATIVE 4

SCALE 1:1500

L-2

	DATE	REVISED BY
CALCULATED/ DESIGNED BY	6/99	
CHECKED BY	6/99	DATE REVISED

DESIGN OVERSIGHT
XXXXXXX

STATE OF CALIFORNIA - DEPARTMENT OF TRANSPORTATION
Caltrans

LAST REVISION XX-XX-XX
DATE PLOTTED => 10/3/2008
TIME PLOTTED => 11:17:44 AM

FORM DC-OE-9I-PF (REV. 3/88)

FOR REDUCED PLANS ORIGINAL SCALE IS IN MILLIMETERS 0 20 40 60 80

DGN FILE => p:\p02432\0005\cadd\rejected alternatives\psralt4-2.dgn

CU

EA 44810

VALUE ANALYSIS ALTERNATIVE 1
CONVENTIONAL URBAN INTERCHANGE

DIST	COUNTY	ROUTE	KILOMETER POST TOTAL PROJECT	SHEET No	TOTAL SHEETS
08	SBd	10	40.7 / 43.9		

Caltrans Metric

REGISTERED CIVIL ENGINEER

PLANS APPROVAL DATE

REGISTERED PROFESSIONAL ENGINEER No. Exp. CIVIL STATE OF CALIFORNIA

TETRA TECH, INC.
348 WEST HOSPITALITY LANE,
SUITE 100,
SAN BERNARDINO, CA 92408

The State of California or its officers or agents shall not be responsible for the accuracy or completeness of electronic copies of this plan sheet.

V.A. ALTERNATIVE 1

URBAN INTERCHANGE ALTERNATIVE 1.0

SCALE 1:1500

DATE	REVISED BY	DATE REVISED
6/99		6/99

CALCULATED/DESIGNED BY

CHECKED BY

DESIGN OVERSIGHT

XXXXXXXXXX

STATE OF CALIFORNIA - DEPARTMENT OF TRANSPORTATION

Caltrans

LAST REVISION XX-XX-XX

DATE PLOTTED => 10/3/2008
TIME PLOTTED => 11:17:48 AM

FORM DC-OE-91-PF (REV. 3/88)

FOR REDUCED PLANS ORIGINAL SCALE IS IN MILLIMETERS 0 20 40 60 80

DGN FILE => p:\p02432\0005\cadd\rejected alternatives\vaalt1.dgn

CU

EA 44810

VALUE ANALYSIS ALTERNATIVE 2
EXTENSION OF EVANS STREET NORTHWARD ACROSS I-10

DIST	COUNTY	ROUTE	KILOMETER POST TOTAL PROJECT	SHEET No	TOTAL SHEETS
08	SBd	10	40.7 / 43.9		

Caltrans Metric

REGISTERED CIVIL ENGINEER

PLANS APPROVAL DATE

REGISTERED PROFESSIONAL ENGINEER No. Exp. CIVIL STATE OF CALIFORNIA

TETRA TECH, INC.
348 WEST HOSPITALITY LANE,
SUITE 100,
SAN BERNARDINO, CA 92408

The State of California or its officers or agents shall not be responsible for the accuracy or completeness of electronic copies of this plan sheet.

V.A. ALTERNATIVE 2

EVANS OVERCROSSING ALTERNATIVE 4.0

SCALE 1:1500

L-1

STATE OF CALIFORNIA - DEPARTMENT OF TRANSPORTATION		DESIGN OVERSIGHT	XXXXXXXXX
Caltrans		CALCULATED/ DESIGNED BY	XXXX
		CHECKED BY	XXXX

DATE	REVISED BY
6/99	DATE REVISED

LAST REVISION XX-XX-XX

DATE PLOTTED => 10/3/2008
TIME PLOTTED => 11:17:52 AM

FORM DC-OE-91-PF (REV. 3/88)

FOR REDUCED PLANS ORIGINAL SCALE IS IN MILLIMETERS 0 20 40 60 80

DGN FILE => p:\p02432\0005\cadd\rejected alternatives\vaalt4-1.dgn

CU

EA 44810

DIST	COUNTY	ROUTE	KILOMETER POST TOTAL PROJECT	SHEET No	TOTAL SHEETS
08	SBd	10	40.7 / 43.9		

Caltrans Metric

REGISTERED CIVIL ENGINEER

PLANS APPROVAL DATE

REGISTERED PROFESSIONAL ENGINEER No. Exp. CIVIL STATE OF CALIFORNIA

TETRA TECH, INC.
348 WEST HOSPITALITY LANE,
SUITE 100,
SAN BERNARDINO, CA 92408

The State of California or its officers or agents shall not be responsible for the accuracy or completeness of electronic copies of this plan sheet.

V.A. ALTERNATIVE 2

EVANS OVERCROSSING
ALTERNATIVE 4.0

SCALE 1:1500

L-2

CALCULATED/ DESIGNED BY	DATE 6/99	REVISED BY
CHECKED BY	6/99	DATE REVISED

DESIGN OVERSIGHT
XXXXXXX

STATE OF CALIFORNIA - DEPARTMENT OF TRANSPORTATION
Caltrans

LAST REVISION XX-XX-XX
DATE PLOTTED => 10/3/2008
TIME PLOTTED => 11:17:55 AM

FORM DC-OE-9I-PF (REV. 3/88)

FOR REDUCED PLANS ORIGINAL SCALE IS IN MILLIMETERS 0 20 40 60 80

DGN FILE => p:\p02432\0005\cadd\rejected alternatives\vaalt4-2.dgn

CU

EA 44810

POST VALUE ANALYSIS ALTERNATIVE 1
BASE CONDITION

DIST	COUNTY	ROUTE	KILOMETER POST TOTAL PROJECT	SHEET No	TOTAL SHEETS
08	SBd	10	40.7 / 43.9		

Caltrans Metric

REGISTERED CIVIL ENGINEER

PLANS APPROVAL DATE

REGISTERED PROFESSIONAL ENGINEER No. Exp. CIVIL STATE OF CALIFORNIA

TETRA TECH, INC.
348 WEST HOSPITALITY LANE,
SUITE 100,
SAN BERNARDINO, CA 92408

The State of California or its officers or agents shall not be responsible for the accuracy or completeness of electronic copies of this plan sheet.

POST V.A ALTERNATIVE 1

BASE ALTERNATIVE

SCALE 1:1500

L-1

STATE OF CALIFORNIA - DEPARTMENT OF TRANSPORTATION

Caltrans

DESIGN OVERSIGHT XXXXXXXX

CALCULATED/DESIGNED BY | DATE 6/99 | REVISED BY

CHECKED BY | 6/99 | DATE REVISED

LAST REVISION XX-XX-XX

DATE PLOTTED => 10/3/2008
TIME PLOTTED => 11:17:05 AM

FORM DC-OE-91-PF (REV. 3/88)

FOR REDUCED PLANS ORIGINAL SCALE IS IN MILLIMETERS 0 20 40 60 80

DGN FILE => P:\P02432\0005\CADD\rejected alternatives\postVA1.dgn

CU

EA 44810

POST VALUE ANALYSIS ALTERNATIVE 2
ALTERNATIVES 2A, 2B AND 2C

DIST	COUNTY	ROUTE	KILOMETER POST TOTAL PROJECT	SHEET No	TOTAL SHEETS
08	SBd	10	40.7 / 43.9		

Caltrans Metric

REGISTERED CIVIL ENGINEER

PLANS APPROVAL DATE

REGISTERED PROFESSIONAL ENGINEER No. Exp. CIVIL STATE OF CALIFORNIA

TETRA TECH, INC.
348 WEST HOSPITALITY LANE,
SUITE 100,
SAN BERNARDINO, CA 92408

The State of California or its officers or agents shall not be responsible for the accuracy or completeness of electronic copies of this plan sheet.

POST V.A. ALTERNATIVE 2

ALTERNATIVE 2A,2B,2C

SCALE 1:1500

L-1

DESIGN OVERSIGHT	CALCULATED/ DESIGNED BY	DATE 6/99	REVISED BY
XXXXXXX	CHECKED BY	6/99	DATE REVISED

STATE OF CALIFORNIA - DEPARTMENT OF TRANSPORTATION

Caltrans

LAST REVISION XX-XX-XX

DATE PLOTTED => 10/3/2008
TIME PLOTTED => 11:17:08 AM

FORM DC-OE-91-PF (REV. 3/88)

FOR REDUCED PLANS ORIGINAL SCALE IS IN MILLIMETERS 0 20 40 60 80

DGN FILE => p:\p02432\0005\cadd\rejected alternatives\postva2-1.dgn

CU

EA 44810

DIST	COUNTY	ROUTE	KILOMETER POST TOTAL PROJECT	SHEET No	TOTAL SHEETS
08	SBd	10	40.7 / 43.9		

Caltrans Metric

REGISTERED CIVIL ENGINEER

PLANS APPROVAL DATE

REGISTERED PROFESSIONAL ENGINEER No. Exp. CIVIL STATE OF CALIFORNIA

TETRA TECH, INC.
348 WEST HOSPITALITY LANE,
SUITE 100,
SAN BERNARDINO, CA 92408

The State of California or its officers or agents shall not be responsible for the accuracy or completeness of electronic copies of this plan sheet.

POST V.A. ALTERNATIVE 2

ALTERNATIVE 2A,2B,2C

SCALE 1:1500

L-2

	DATE	REVISED BY
CALCULATED/ DESIGNED BY	6/99	
CHECKED BY	6/99	DATE REVISED

DESIGN OVERSIGHT
XXXXXXX

STATE OF CALIFORNIA - DEPARTMENT OF TRANSPORTATION
Caltrans

LAST REVISION XX-XX-XX
DATE PLOTTED => 10/3/2008
TIME PLOTTED => 11:17:13 AM

FORM DC-OE-9I-PF (REV. 3/88)

FOR REDUCED PLANS ORIGINAL SCALE IS IN MILLIMETERS 0 20 40 60 80

DGN FILE => p:\p02432\0005\cadd\rejected alternatives\postva2-2.dgn

CU

EA 44810

POST VALUE ANALYSIS ALTERNATIVE 3
SPLIT DIAMOND INTERCHANGE

DIST	COUNTY	ROUTE	KILOMETER POST TOTAL PROJECT	SHEET No	TOTAL SHEETS
08	SBd	10	40.7 / 43.9		

Caltrans Metric

REGISTERED CIVIL ENGINEER

PLANS APPROVAL DATE

REGISTERED PROFESSIONAL ENGINEER No. Exp. CIVIL STATE OF CALIFORNIA

TETRA TECH, INC.
348 WEST HOSPITALITY LANE,
SUITE 100,
SAN BERNARDINO, CA 92408

The State of California or its officers or agents shall not be responsible for the accuracy or completeness of electronic copies of this plan sheet.

POST V.A ALTERNATIVE 3

SPLIT DIAMOND

SCALE 1:1500

L-1

	CALCULATED/ DESIGNED BY	DATE 6/99	REVISED BY
	CHECKED BY	6/99	DATE REVISED

DESIGN OVERSIGHT
XXXXXXXX

STATE OF CALIFORNIA - DEPARTMENT OF TRANSPORTATION
Caltrans

LAST REVISION XX-XX-XX
DATE PLOTTED => 10/3/2008
TIME PLOTTED => 11:17:16 AM

FORM DC-OE-91-PF (REV. 3/88)

FOR REDUCED PLANS ORIGINAL SCALE IS IN MILLIMETERS 0 20 40 60 80

DGN FILE => p:\p02432\0005\cadd\rejected alternatives\postva3-1.dgn

CU

EA 44810

DIST	COUNTY	ROUTE	KILOMETER POST TOTAL PROJECT	SHEET No	TOTAL SHEETS
08	SBd	10	40.7 / 43.9		

Caltrans Metric

REGISTERED CIVIL ENGINEER

PLANS APPROVAL DATE

REGISTERED PROFESSIONAL ENGINEER No. Exp. CIVIL STATE OF CALIFORNIA

TETRA TECH, INC.
348 WEST HOSPITALITY LANE,
SUITE 100,
SAN BERNARDINO, CA 92408

The State of California or its officers or agents shall not be responsible for the accuracy or completeness of electronic copies of this plan sheet.

POST V.A ALTERNATIVE 3

SPLIT DIAMOND

SCALE 1:1500

MATCH LINE SEE EVANS ST. FEASIBILITY STUDY

L-2

CALCULATED/ DESIGNED BY	
CHECKED BY	
DATE	6/99
REVISED BY	
DATE REVISED	6/99

DESIGN OVERSIGHT **XXXXXXX**

STATE OF CALIFORNIA - DEPARTMENT OF TRANSPORTATION

Caltrans

LAST REVISION XX-XX-XX

DATE PLOTTED => 10/3/2008
TIME PLOTTED => 11:17:20 AM

FORM DC-OE-91-PF (REV. 3/88)

FOR REDUCED PLANS ORIGINAL SCALE IS IN MILLIMETERS 0 20 40 60 80

DGN FILE => p:\p02432\0005\cadd\rejected alternatives\postva3-2.dgn

CU

EA 44810

POST VALUE ANALYSIS ALTERNATIVE 4
SOUTHEAST QUADRANT

DIST	COUNTY	ROUTE	KILOMETER POST TOTAL PROJECT	SHEET No	TOTAL SHEETS
08	SBd	10	40.7 / 43.9		

REGISTERED CIVIL ENGINEER

PLANS APPROVAL DATE

REGISTERED PROFESSIONAL ENGINEER No. Exp. CIVIL STATE OF CALIFORNIA

TETRA TECH, INC.
348 WEST HOSPITALITY LANE,
SUITE 100,
SAN BERNARDINO, CA 92408

The State of California or its officers or agents shall not be responsible for the accuracy or completeness of electronic copies of this plan sheet.

Caltrans Metric

POST V.A. ALTERNATIVE 4

SOUTHEAST QUADRANT

SCALE 1:1500

L-1

STATE OF CALIFORNIA - DEPARTMENT OF TRANSPORTATION

Caltrans

DESIGN OVERSIGHT

XXXXXXX

CALCULATED/DESIGNED BY | DATE 6/99 | REVISED BY

CHECKED BY | 6/99 | DATE REVISED

LAST REVISION XX-XX-XX

DATE PLOTTED => 10/3/2008
TIME PLOTTED => 11:17:24 AM

FORM DC-OE-91-PF (REV. 3/88)

FOR REDUCED PLANS ORIGINAL SCALE IS IN MILLIMETERS 0 20 40 60 80

DGN FILE => p:\p02432\0005\cadd\rejected alternatives\postva4.dgn

CU | EA 44810

ATTACHMENT L

Environmental Document (Cover and Title Sheet)

Interstate 10/Tippecanoe Avenue Interchange Improvement Project

CITIES OF LOMA LINDA AND SAN BERNARDINO
SAN BERNARDINO COUNTY, CALIFORNIA
DISTRICT 08 – SBD – 10, PM 25.3/27.3
EA 08-448100 PN0800000710

Initial Study with Mitigated Negative Declaration/ Environmental Assessment with Finding of No Significant Impact

Prepared by the
State of California Department of Transportation

The environmental review, consultation, and any other action required in accordance with applicable Federal laws for this project is being, or has been, carried out by the Department under its assumption of responsibility pursuant to 23 U.S.C. 327.

January 2011

08-SBD-010 PM 25.3/27.3
EA 08-448100
PN 0800000710
SCH # 2009101072

Reconstruction of the Interstate 10 (I-10)/Tippecanoe Avenue Interchange (post mile 25.3 to 27.3); addition of an eastbound auxiliary lane on I-10 from Waterman Avenue to Tippecanoe Avenue; widening of I-10 bridges over San Timoteo Creek and Tippecanoe Avenue; widening of Anderson Street/Tippecanoe Avenue and Redlands Boulevard; construction of a roadway to connect East Coulston Street, East Lee Street, and East Laurelwood Drive; and elimination of the South Ferree Street connection to East Rosewood Drive in the Cities of San Bernardino and Loma Linda, California.

INITIAL STUDY WITH MITIGATED NEGATIVE DECLARATION/ ENVIRONMENTAL ASSESSMENT WITH FINDING OF NO SIGNIFICANT IMPACT

Submitted Pursuant to: (State) Division 13, California Public Resources Code and (Federal) 42 U.S.C. 4332(2)(c)

THE STATE OF CALIFORNIA
Department of Transportation

1/27/2011
Date of Approval

David Bricker
Deputy District Director
District 8 Division of Environmental Planning
California Department of Transportation

The following persons may be contacted for additional information concerning the document:

Aaron Burton
464 W. 4th Street, 6th Floor MS 1162
San Bernardino, CA 92401-1400
(909) 388-1804

Scott Neff
1173 W. 3rd Street
San Bernardino, CA 92410
(909) 884-8276

SCH Number: 2009101072

MITIGATED NEGATIVE DECLARATION

Pursuant to: Division 13, Public Resources Code

Project Description

San Bernardino Associated Governments (SANBAG), in cooperation with the California Department of Transportation (Department), the City of San Bernardino, and the City of Loma Linda, proposes to reconstruct the Interstate 10 (I-10)/Tippecanoe Avenue interchange. The proposed project includes the addition of an eastbound auxiliary lane on I-10 from Waterman Avenue to Tippecanoe Avenue; widening of I-10 bridges over San Timoteo Creek and Tippecanoe Avenue; widening of Anderson Street/Tippecanoe Avenue and Redlands Boulevard; construction of a roadway to connect East Coulston Street, East Lee Street, and East Laurelwood Drive; and elimination of the South Ferree Street connection to East Rosewood Drive. The proposed project passes through the Cities of San Bernardino and Loma Linda in San Bernardino County, California. The total length of the project, along I-10, is approximately 1.5 miles.

Determination

An Initial Study (IS) has been prepared for this project, and following public review, the Department has determined from this study that the proposed project would not have a significant effect on the environment for the following reasons:

The proposed project would have no effect on:

- Coastal Zones
- Wild and Scenic Rivers
- Farmlands or Timberlands
- Natural Communities
- Plant Species
- Threatened and Endangered Species

In addition, the proposed project would have no significant effect on:

- Visual/Aesthetic elements
- Cultural Resources
- Water Quality

- Geology and Soils

The proposed project would have no significantly adverse effect on Paleontological resources or Community Character and Cohesion, because the following mitigation measures would reduce potential effects to insignificance:

- PAL-1: Preparation and implementation of a Paleontological Mitigation Plan.
- COM-1: Approval of a parking lot circulation plan at Baker's Burgers.
- REL-1: The Department shall comply with the Uniform Relocation Assistance and Real Property Acquisitions Policies Act of 1970 as Amended in 1987.

David Bricker
Deputy District Director
District 8 Division of Environmental Planning
California Department of Transportation

1/27/2011
Date of Approval

CALIFORNIA DEPARTMENT OF TRANSPORTATION
FINDING OF NO SIGNIFICANT IMPACT

FOR

Interstate 10 / Tippecanoe Avenue Interchange Improvement Project
SBd—10 PM 25.3 / 27.3

The California Department of Transportation (Department) has determined that the Build Alternative (also identified as Alternative 1), will have no significant impact on the human environment. This Finding of No Significant Impact (FONSI) is based on the attached Environmental Assessment (EA) and the associated Technical Studies and design documents, which have been independently evaluated by the Department and determined to adequately and accurately discuss the need, environmental issues, and impacts of the proposed project and appropriate mitigation measures. It provides sufficient evidence and analysis for determining that an Environmental Impact Statement (EIS) is not required. The Department takes full responsibility for the accuracy, scope, and content of the attached EA and the associated Technical Studies and design documents.

The environmental review, consultation, and any other action required in accordance with applicable Federal laws for this project is being, or has been, carried-out by Caltrans under its assumption of responsibility pursuant to 23 U.S.C. 327.

Notwithstanding any other provision of law, a claim arising under federal law seeking judicial review of the permit, license or approval issued by a federal agency for a highway or public transportation project shall be barred unless it is filed within 180 days after publication of a notice in the Federal Register announcing that the permit, license, or approval is final pursuant to the law under which agency action is taken, unless a shorter time is specified in the federal law pursuant to which judicial review is allowed.

1/27/2011
Date

David Bricker
Deputy District Director
District 8 Division of Environmental Planning
California Department of Transportation

ATTACHMENT M

Transportation Management Plan Data Sheet

TRANSPORTATION MANAGEMENT PLAN (TMP) DATA SHEET # 2 for PID, PSR, PR or PSE including DTM requirements for PSE and Construction Phase - This TMP is valid for **two years** from date of preparation, unless the project or impact changes.

T:\DTM.TMP\project docs\SBD-40\435401\081210\435401 Data Sheet # 2.xls (includes signature/background sheet, estimate, table, DTM requirements, and Revisions & Notes)

TEMPLATE: 0 TMP Data Sheet revised 070216.xls. **CT & CONSULTANTS, PLEASE REQUEST THE LATEST TEMPLATE SINCE IT WILL HAVE THE CURRENT RATES, etc. CAUTION - ck for formulas in cells - amounts flow from Tab 3 to 2 to 1.**

EA	08-448100	DATE	8/31/2009

08-SBD-10-R25.3/27.3

Location: I-10 at Tippecanoe Ave/Anderson St in San Bernardino County

Work: Tippecanoe Avenue / I-10 Interchange Reconstruction Improvement: Mainline Widening, Bridge Widening, Ramp Realignment, New Ramps, Street Widening

Date of TMP/Review Request memo: XX/XX/09

Documents available:

TMP request letter, Cost Est., Title sheet

SAMPLE TMP DATA SHEET - Instructions see Tab 6

Construction period per PE	
EST START DATE	Apr-2012
EST END DATE	Aug-2013

Construction period per WPS	
EST START DATE	
EST END DATE	

BACKGROUND INFORMATION:

DURATION:	330	WORKING DAYS		
PROJECT COST:	$31,221,000			
TMP ESTIMATE:	**$263,280**	or	0.84%	OF THE PROJECT COST

IMPACT	High	Medium	Low	NA
STATE HWY		X		
LOCAL RD		X		
Ramps / connectors	X			

Details: *(Briefly explain traffic impacts and how you will mitigate them)*
11' lanes and no shoulder for mainline widening.
Temporary ramp closure for EB Tippecanoe Ave. off-ramp.
11' lanes and no shoulder for street widening.

If the TMP has been prepared by D8/Ops/TMP, use this signature block:

Prepared by Signature ORIGINAL SIGNED BY Martin Hess Date

Name
Title
Organization
Telephone/FAX
email

This Transportation Management Plan (TMP) has been prepared under the direction of the following Registered Engineer. The Registered Civil Engineer attests to the technical information contained therein and the engineering data upon which recommendations, conclusions, and decisions are based.

Prepared by Signature Date
8/31/09

Name Jimmy Vuong
Title Project Engineer
Organization RMC, Inc.
Telephone/FAX (714) 662-3020
email jvuong@4rmcinc.com

At 100% PSE these signature blocks need to be filled in:

LC recommends approval Signature ORIGINAL SIGNED BY ???? YOUR NAME ??? Date 0/0/00
LC approval does not apply for encroachment permits (EP) because DTM handles EP closure requests.

Assist. TMP recommends approval Signature ORIGINAL SIGNED BY ???? YOUR NAME ??? Date 0/0/00

Assist. DTM recommends approval Signature ORIGINAL SIGNED BY ???? YOUR NAME ??? Date 0/0/00

Approved by Signature ORIGINAL SIGNED BY Martin Hess FOR Al Afaneh
Date

Al Afaneh
TMP/DTM Traffic Manager
Department of Transportation
District 8/Operations MS-B20
464 W 4th Street 6th Floor
909 383-4917, FAX 909 383-1068
Al_Afaneh@dot.ca.gov

Prepared for REQUESTER (s), phone #: Sergio E.Avila x4062
cc: Michelle Tavakoli x4057

Project Manager:
Project Senior:
AAfaneh,
TAinsworth, at 95% CC TMT manager if TMT may be needed
CKwong, at 95% CC TMC Manager if TOS elements or TMC support may be needed
AKirst, whenever significant traffic impact expected so TMC support needed (Unit 370)
HYahya ,TSasis, or MJabson, Ops Surveillance
MKar (D8 Callbox Coordinator routes to SAFEs as needed. Also concerned if loops for supercallboxes or census stations are damaged)
AMachen (all per his request)
MBendelhoum (per his request)

RMelgoza
TKasinga
SLombardo
TLagana
Traci Peterson/D08/Caltrans/CAGov

VGau
MBoone
BWasser or LSartori
RTadi
DTM_Dist08@dot.ca.gov

MHess
UApabio
DMaleki
Benjamin Egiebor/D08/Caltrans/CAGov,
Cuong Tieu/D08/Caltrans/CAGov,
Kim L Walker/D08/Caltrans/CAGov,

Roy Wojahn/D08/Caltrans/CAGov,(HQ Truck Services Manager for D8)
Steve Dickey (Southern Region Transportation Permits contact for D8)
DerekWilliams@chp.ca.gov (D8 TMC CHP Officer)
JoWilson@chp.ca.gov (Inland Division Cozeep/Mazeep Coordinator)

HTupper@chp.ca.gov (CHP Inland Division FSP Coordinator)
dwelch@chp.ca.gov (CHP Inland Division FSP)

see Tab 6 re RCTC 6/28/05
MKirkhoff@sanbag.ca.gov (SANBAG's Callbox and FSP Manager - if SBd County FSP beats may be affected or CFSP needed)
KLynn@sanbag.ca.gov

If items are checked in Section 5 on the Table tab:
swiggins@rctc.org (RCTC Demand Management Manager)
MKirkhoff@sanbag.ca.gov (SANBAG DM Manager)
KLynn@sanbag.ca.gov

TMP ESTIMATE	EA	08-448100	DATE	8/31/2009

1. Public Information	NO	**YES**	MAYBE	$75,000
2. Motorist Information Strategies	NO	YES	**MAYBE**	$43,000
3. Incident Management	NO	**YES**	MAYBE	$135,280
4. Construction Strategies	NO	**YES**	MAYBE	$0
5. Demand Management (DM)	NO	YES	**MAYBE**	$0
6. Alternate Route Strategies	NO	**YES**	MAYBE	$10,000
7. Other Strategies	NO	YES	**MAYBE**	$0
			TMP TOTAL	**$ 263,280**

TMP TABLE	EA	08-448100	DATE	8/31/2009

An X in the check box means you need to include this in the project unless staging, material, or work hour changes eliminate the need for the item. A ? in the box means TMP anticipates this - please check into this. A blank box means the item is not needed at this time based on the information received.

1 Public Information/Public Awareness Campaign (PAC)

BEES 066063 - Traffic Management Plan Public Information.
Cost to be reduced by Public Affairs (PA) and Construction Liaison (CL) only.

			PA COST	CL COST	COST
1.0	X	Include Rideshare information in PA/CL project material to encourage vehicles reduction in work area			$ -
1.1	X	Brochures and Mailers	$ 500	$ 500	$ 1,000
1.2	X	Media Releases (& minority media sources)	$ 25,000	$ 25,000	$ 50,000
1.3		Paid Advertising			$ -
1.4		Public Information Center/Kiosk			$ -
1.5	X	Public Meetings/PAC Mtgs./Speakers Bureau (show cost also for room rental)	$ 10,000	$ 10,000	$ 20,000
1.6	X	Handdeliver notices to vicinity			$ -
1.7		Broadcast fax service			$ -
1.8		Telephone Hotline OR			$ -
1.9	?	1-800-COMMUTE (the telephone number is shown on CS-Info signs) - contact Cyrin Kwong, 383-4256, to place msg into the 1800C telephone system.			$ -
1.10		Visual Information (videos, slide shows, etc.)			$ -
1.11		Local cable TV and News			$ -
1.12		BEES 861985 Traveler Information Systems (Internet)			$ -
1.13	X	Internet, E-mail	$ 2,000	$ 2,000	$ 4,000
1.14	X	Notification to targeted groups:			$ -
	?	Revised Transit Schedules/maps			$ -
	X	Rideshare organizations			$ -
	X	schools			$ -
	X	organizations representing people with disabilities			$ -
	X	bicycle organizations			$ -
1.15		Include PA/CL/Consultant resources in WPS			$ -
1.16	X	Commercial traffic reporters/feeds - e.g. brief Traffic Information people (TIP) group			$ -
1.17	X	Insert SSP (no number at this time) "A representative of the Contractor, at Superintendent level or higher, and authorized to commit the Contractor, shall attend and participate in all Public Awareness Campaign meetings. Time commitment for the meeting(s) varies from two to four hours per month."			$ -
1.18		Others			$ -
		Subtotals	$ 37,500	$ 37,500	
				SUBTOTAL	$75,000

2 Traveler Information Strategies

Project team needs to coordinate with Traffic Design!

2.1 X Existing Electronic Message Signs (Stationary) - list locations. See Note 5

New Installation (Stationary) - BEES 860530 CHANGEABLE MESSAGE SIGN SYSTEM

- list locations. See Note 5

2.2 [X] Portable Changeable Message Signs (PCMS). $ 35,000

Construction prefers Rental Lumpsum BEES 066578 in Supplemental Funds

And include SSP 12-370

These PCMS advise motorists to divert at remote advance decision points - outside the usual work limits. Unlike stationary CMS, you are allowed to use them for advance motorist information - e.g. a week ahead. Their placement may need to be cleared **environmentally** so that they can be included in plans and SSP later. They may be **in addition** to Traffic Design's PCMS for regular traffic handling in and next to a work area.

Placement Details: Two, one at each end of the Project Limits.

2.3 [ ] BEES 860503 Extinguishable Signs (only shown because they are on the TMP Guidelines list. Usually found at Weigh Stations - Weigh Station "open/closed".)

2.4 Ground Mounted Signs / Fabric signs — Note 2

[X] C40/40A Double Fine Sign - black and white — $2,000

[X] BEES 860926 Regulatory speed signs — $2,000

[X] SC6-4 (per MUTCD) (Ramp will be closed…) — $2,000

[X] CS-SPECIAL w/ SC6-2 PANEL ("Dates/Days/Hours/Expect delay") Use when conventional highways or local roads will be affected for longer periods. To encourage traffic to detour so delay in your work area is less, use at advance location and add the work location. **Use fabric signs if short duration or fast moving operation.** — $2,000

[ ] CS-INFO/1-800-COMMUTE Panel Sign. **Also see 1.9.**

[ ] Blue and white Rideshare guide signs, including website (1-800-COMMUTE/www.commutesmart.info). **Need to be installed at the same time as the funding signs.**

2.5 [ ] BEES 860520 Commercial Traffic Radio (usually only applicable in the Upper desert)

[ ] Highway Advisory Radio (HAR) - Fixed. List locations here. They can be obtained from TMC Manager. See Note 5.

[ ] Highway Advisory Radio - mobile (signs alerting motorists to the HAR will also be needed) Contact TMC manager for assistance with specifications to include portable HARs as bid item in the contract. To avoid FCC fines, CT Portable HAR cannot be used except for emergencies. Seldom used. See Note 5

List proposed locations here:

2.6 [X] Lane Closure Web Site

2.7 [X] Caltrans Highway Information Network (CHIN)

2.8 [ ] Radar Speed Message Sign (Specter sign) BEES 066064 (approx. EA @ $30,000)

2.9 [X] Bicycle and pedestrian information, e.g. Detour maps

2.10 [ ] Others

SUBTOTAL $43,000

3 Incident Management

3.1 CHP's Construction or Maintenance Zone Enhanced Enforcement Program – COZEEP or MAZEEP. BEES 066062 - show under "State or Agency furnished" in the Cost Estimate. **SSP 12-225 has been deleted per HQ OE**. See note 1.

TMP TABLE	EA	08-448100	DATE	8/31/2009

Consider the LC hours and add CHP driving time to/from their office

Hourly Cozeep overtime loaded rate: $ 95

COZEEP - to protect active closures

0	0	0	8	8	2	$12,160
# of days	hours	# of officers (1 per car)	**nights**	**hours**	# of officers (Remember - nights require 2 per car)	

ECOZEEP - to mitigate continuos restrictions. Add weekends days if needed.

0	0	0	0	0	0	$0
# of days	hours	# of officers	**nights**	**hours**	see above	

(add weekends days as needed)

CHP TRAFFIC HANDLING - reduce delay by keeping traffic flowing and/or to enforce closures - total facility/structure/major traffic shifts/ramps/connectors/local road/extended closures. Freeway closures with local road detours may require **2 officers per intersection** to direct traffic.

0	0	0	0	0	0	$0
days	hours	# of officers	**nights**	**hours**	see above	

CHP Officer in TMC during major construction closures

0	0	0	$0
days	hours	# of officers	

CHP Officer for Command Post during regional impact construction closures

0	0	0	$0
days	hours	# of officers	

3.1 Total $12,160

3.2 BLANK

3.3 **Freeway Service Patrol (FSP) for Construction (CFSP)** $/hr/truck $75

BEES 066065 - show under "State or Agency furnished" in the Cost Estimate

Short duration or remote area CFSP usually is bid w much higher hourly rates. If enhancement of program FSP feasible, CFSP could tie into the lower long-term FSP rates.

FOR SERVICE **WITHIN** REGULAR FSP HOURS:

A days & hrs: 300 2 # of trucks: 2 $90,000

FOR SERVICE **OUTSIDE** REGULAR FSP HOURS:

Extend Peak hour coverage

B days & hrs: 10 2 # of trucks: 2 $3,000

Night support during structure freeway closures and major traffic shifts

C days & hrs: 10 2 # of trucks: 2 $3,000

Weekend support

D days & hrs: 10 2 # of trucks: 2 $3,000

Local agency (SAFE) support 8% of truck cost $7,920

CFSP CHP support 5% of truck cost $4,500

THIS % ONLY IF **WITHIN** REGULAR FSP HOURS AND AREA!

Equipment/Supplies 10% $9,900
% of truck cost unless more detail available

CONSULT W INLAND DIVISION CHP OR BORDER IN SOUTHERN RIVERSIDE CO. which method is acceptable FOR B,C,D WHICH ARE OUTSIDE REGULAR FSP HOURS OR AREA!

Method 1

CFSP CHP support - including time for meetings 20% of truck cost $1,800

or

Method 2

CFSP Dispatcher @ **$45**

		0	$ -
days/nights	hours	Dispatcher(s)	

CFSP CHP Officers (See Cozeep rate)

		0	0	0	0	$ -
days	hours	# of officers	**nights**	**hours**		

Include time for meetings:

		0			0	$ -
days	hours	# of officers	**nights**	**hours**		

☐ Cooperative Agreement or Task Order with SAFE
for $106,920

☐ Task Order with CHP (Statewide Master Agreement for FSP support).
for $6,300
Contact District FSP Coordinator for task orders.

☐ Service Contract
☐ Local Agency will arrange CFSP with SAFE
☐ Local Agency will arrange CFSP administration with CHP

3.3 Total $123,120

3.4 ☐ CHP Helicopter/Airplane

3.5 ☒ Traffic Surveillance Stations for construction impact mitigation (loop detectors and CCTV)
Keep existing operational during construction
☐ New CCTV
☐ New loops

3.6 **Call Boxes - also see <u>NOTE 4</u> in the Revisions & Notes tab**
TEMPORARY INSTALLATION to mitigate impact ($5000/box/move from project funds to SAFE). Project Report/Design PE: Please discuss with the D8 Call box coordinator if it is feasible to keep this motorist aid available during construction. If it is not, please notify TMP, then other mitigation needs to be considered. For location in SBd County see Q:\Ops\Call Boxes\SBD\Excel List. Apparently no list available for Riv County.

☐ callboxes x ☐ moves x $5,000.00 = $0
☐ *Add 15% to callbox cost since contractor will need to pay SAFE through CCO.*

3.7 ☐ 911 Cellular Calls

3.8 ☒ Project needs to provide resources to Transportation Management Center Unit 370 for additional staff during high impact closures

3.9 ☐ Traffic Management Teams (TMT) needed to assist w system diversion/impact reduction. Project needs to provide resources.

See 7/3/05 in Tab 6 - Revisions

3.10 ☐ On-site Traffic Advisor

3.11 ☐ Others

TMP TABLE	EA	08-448100	DATE	8/31/2009
		SUBTOTAL	$	135,280

4 Construction Strategies

4.1 [X] Coordinate with adjacent construction and planned projects - also on detour routes.
Use SSP 07-850

4.2 This TMP presumes work is planned as below. If different, TMP needs to be revised. The Lead Project Engineer is responsible to include all appropriate closure charts.

- [X] Off peak
- [X] Night
- [X] Weekend

4.3

- [ ] Flagging
- [X] Shoulder
- [X] Lane
- [X] Street
- [X] Ramp
- [ ] **Connector***
- [ ] **Extended Weekend Closures***
- [x] **Total Facility Closures***

***Consult w TMP and DTM re Cozeep & other cost. Show your detour and traffic diversion plans.**

4.4 [ ] Contra Flow (put traffic into opposing roadbed)
4.5 [ ] Reversible Lanes
4.6 [X] Project Phasing
4.7 [X] BEES 152372 - If K-Rail is placed, consider including cost item for lateral shifting to open a minimum of 2.4 m (8') shoulder space as soon as possible. Please include supplemental work funds in the estimate to pay for the extra work. See Standard Specifications 12-4, Measurement and Payment**. PE must discuss this and traffic screen w Traffic Design!**

4.8 [X] BEES 129150 Temporary Traffic Screens (Gawk Screen - see 5/10/06 entry in Revisions tab)
4.9 [ ] Movable Barrier
4.10 [ ] Truck Traffic Restrictions
4.11 [?] BEES 066008 Incentives/Disincentives
4.12 [X] BEES 070010 Strictly enforce Constr. Progress Schedule (CPM)

CAUTION: If the Lane Closure Chart (LCC) for full mainline closures (one or both directions on a highway or freeway) does not show a maximum number of allowable days, the PSE cannot be certified by DTM/TMP.

Please contact Saleh Yadegari, 4232, to get Delay Calculations, lane closure charts, Table Z and Special events list. Inform him of any concerns/committments re special LC days, times, season, events; environmental restrictions; if work may be affected by snow and low or high temperatures. E.g. desert heat may delay AC digout curing which may increase traffic impact when vehicles overheat in the queue; etc. **I**F traffic volumes vary significantly between seasons, consider 2 sets of closure charts to avoid CCOs later.

Use SSP 12-130 and following

4.13 [ ] Include Specification 12-220
4.14 [ ] Funds for paragraph 11 and 12:
BEES 066022 (**Traffic**) **Right of Way delay**. Show in supplemental work. If State (or agency) denies an approved closure or orders the contractor to pick it up early, this can be used to pay damages, e.g. for AC cold load, etc. $ -

4.15 [ ] **Delay Damages (DD)** **Please contact Saleh Yadegari, 4232, regarding Delay Calculations.** DD is different from the R/W Delay shown above!

4.16 [ ] Others

TMP TABLE	EA	08-448100	DATE	8/31/2009

SUBTOTAL $ -

5 Demand Management (DM)

Project team needs to coordinate with RCTC/SANBAG/CVAG

Traffic diversion may increase available work hours.

5.1 [ ] A coop will be executed - mentioned in PSR or PR.

[ ] Instead of a coop, 15% is added to the cost of DM elements since the payment to the local agency will be routed through the contractor.

[ ] Instead of a coop, the local agency will make their own arrangements with RCTC/SANBAG.

[X] PA/CL or local agency need to inform commuters through RCTC/SANBAG. Funds part of PA/CL.

5.2 [ ] HOV Lanes/Ramps (New or Convert)

5.3 [ ] Park-and-Ride Lots

[ ] LEASED SPACES (Sponsored spaces may be feasible in exchange for signs and print coverage)

5.4 [ ] Parking Management/Pricing (Coordination with local agency required)

5.5 [ ] BEES 066069 Rideshare Promotion

5.6 Rideshare Incentives -

As far as D8 DTM.TMP knows, incentives to individuals cannot be paid by the State, however, State can pay for Local Transportation agency staff time, postage, cost of extra busses, etc.

[ ] Carpool/vanpool

[ ] Transit

[ ] Train

[ ] Light-Rail

5.7 BEES 066066

[ ] Public Transit Support/Improvements/Shuttle Service

[ ] School Shuttle Service

5.8 [ ] Variable Work Hours

5.9 [ ] Telecommute

5.10 [X] Ramp Metering (Modify or new)

5.11 [ ] Blue and white Rideshare signs needed - unless already signed. See 2.4

5.12 [ ] Others

SUBTOTAL $ -

6 Alternate Route Strategies

Caution - signed detours may require environmental clearance

Traffic diversion may increase available work hours. Please work with Traffic Design.

6.1 [ ] Add Capacity to Freeway connector

6.2.1 [X] Upstream Ramp Closures needed to avoid conflicts with closure tapers, etc., during construction

6.2.2 [ ] Upstream Connector Closures needed to avoid conflicts with closure tapers, etc., during construction

6.3 [X] Temporary Highway Lanes or Shoulder Use

6.4 [X] Parking Restrictions

6.5 [X] Street Improvements

[X] State R/W - Signals, Widen, etc.

[X] Local R/W - Signals, Widen, etc. Coop or Permit may be needed

6.6 [ ] Local Street USE - Coop or Permit may be needed

6.7 [ ] Traffic Control Officers (see 3.1 Cozeep)

6.8 [X] Signed detour - using State routes

6.9 [X] Signed detour - using local streets and roads

6.10 [X] Adjust signals $ 10,000

6.11 [ ] Temporary bicycle or pedestrian facilities

6.12 [ ] Others

SUBTOTAL $ 10,000.00

TMP TABLE		EA	08-448100	DATE	8/31/2009
7	**Other Strategies**				
7.1	☐ Application of new technology				
7.2	☐ Innovative products				
7.3	☐ Others				
			SUBTOTAL	$ -	
		TOTAL	$	263,280	

DTM for PS&E **EA 08-448100** **DATE 4/1/2009**

Assistant DTM must be invited by project team starting with the 65% Constructability reviews, in addition to TMP. DTM will review Plan Sheets showing the traffic handling for:

1. **Local area** - how local traffic will be routed around construction restrictions. For example, Riv-215 Linden Iowa Overcrossing replacement requires closure of that structure. How will local traffic be routed?

2. **Vicinity** - how highway and freeway traffic will be routed around construction restrictions and diverted. For example, the Riv-215 Linden Iowa Overcrossing replacement requires freeway closures. One of the elements needed would be signage, usually PCMS, on 60, 91 and 215 ahead of the preceeding exits with appropriate messages. The goal is to divert motorists who know the area and therefore reduce the demand on the signed detour.

3. **Regional** - some work, such as 50% of lanes or connector/freeway closures, or major traffic shifts, etc., require diversion at remote approaches. For example, Riv-215 Linden Iowa Overcrossing replacement requires freeway closures. Therefore PCMS are needed around SBd-10/215, SBd-10/15, EB/WB 60, Riv-15/91, even NB 15/215 in Temecula to encourage motorists to take alternate freeways. Some projects may require diversion into other counties or even States. Projects adjacent to each other or on detour routes for other projects will need to coordinate their closures.

Please contact Al Afaneh, D8 DTM, 909 383-4917, or the DTM desk, 383-5911, DTM Dist08/D08/Caltrans/CAGov, if you need more information.

DTM for Construction EA 08-448100 DATE 4/1/2009

DTM requires these items to approve closures:

1 Email from RE or Permit Inspector that they have reviewed and approved the Contractor's Contingency Plan, with the plan attached. This plan shows how the Contractor will resolve problems which could prevent the timely opening of closures.

2 Also, the Contractor Plansheets showing the elements which will be functional to divert traffic for the proposed work.

3 Depending on the work, Caltrans (CT) or the local agency need an Area, Vicinity, and Regional plan how to divert traffic. This shows which Traffic Operations System (TOS) elements and other resources such as Cozeep, Construction Freeway Service Patrol (CFSP), CT or Local Agency staff, etc., will be used and where. Potential TOS, or TMC, or very limited TMT use require the project team to get written consent from the TMC Manager during the PS&E stage. Resources need to be committed as early as possible so that Construction can make them available to the TMC Manager, Unit 370. DTM.TMP, Unit 375, also requires resources during construction for TMP and DTM involvement.

4 Email from Requestor that any necessary public outreach is in progress. Requestor needs to contact PA and CL or the Maintenance Liaision. If a local agency is doing the work, their PA/CL staff is expected to do the outreach and coordinate with CT PA/CL.

5 Pre-closure meeting: For significant closures, Construction needs to arrange a meeting several days - in time to meet advance notification requirements for CHP and tow services, etc. - before the closure with DTM, TMC, TMT (very limited use), and agencies such as the CHP Area COZEEP Sergeant, CHP Inland Division FSP for CFSP, Locals (to avoid work on detours), to clarify TMP elements to be used and how COZEEP, CFSP, PCMS, tow trucks, etc. need to be deployed, when and where.

6 Night of closure meeting: Construction needs to arrange a tailgate meeting to confirm arrangements with all appropriate units/personnel. Only <u>minor modifications may be made at this time</u>.

7 Notify TMC: RE/Inspector needs to call the TMC as agreed upon at the Pre-Closure meeting (usually at least 30 minutes prior to dropping the first cone in case of full closure or when messages on stationary CMS will be needed.) Confirm TMT support. Advise of any changes/issues that may require signage and other changes. Advise the TMC ASAP if the opening may be delayed and activate the Contingency plan. Remember to provide the 10-97 and 10-98 as well to the TMC.

Please contact Al Afaneh, D8 DTM, 909 383-4927, or the DTM desk, 383-5911, DTM Dist08/D08/Caltrans/CAGov, if you need more information.

Remember, DTM.TMP is unit 375 and not only needs hours in the early project phases, but also in 270, **especially for projects with complex closure approval.**

Revisions and Notes

latest revisions on TOP. TMP Data Sheet instructions at BOTTOM.
Suggestions for improvement - please contact D8 TMP.

PENDING	None
9/5/2007	New DTM Al Afaneh
3/15/2007	New Acting DTM Ramakrishna Tadi
2/6/2007	Changes by DTM to tab 4 and 5
10/30/2006	DKopulsky, Advance Planning, requested to get cc of TMPs in either county.
10/17/2006	Tab 3, 3.3 - adjusted CFSP formula
8/4/2006	Tab 3, 3.3 - Kelly Lynn, SANBAG, recomm we increase CFSP truck costs from $55/hr to $75/hr due to the gas price increase and high demand for tow providers.
7/31/2006	Per Pat Hennessey's, D8 OE, request, Sybille changed PAC from BEES 066063A to BEES 066063 - Traffic Management Plan Public Information.
7/25/2006	Sybille added code. 66010 Work by Others (Temporary Callbox Relocation for mitigation). Using Supplemental funds, RE can direct CT/Local Agency contractor to pay SAFE's (SANBAG/RCTC) callbox contractor to relocate callboxes temporarily to mitigate the impact of construction on motorists. Callboxes are a Permit installation and so need to be moved at the Permittee's expense except when we need them as a mitigation. Unless there is a coop or contract w the Callbox agency, add 15% to callbox moving cost to compensate the contractor to make the arrangements and cut the check.
7/3/2006	If TMT may be needed, discuss with the Maintenance Area Superintendent in the PA/ED Phase AND also Tom Ainsworth, Operations\Freeway Systems, Traffic Management Team (TMT) Manager.
6/13/2006	Added ccs
5/10/2006	Patrick Hsu requested that 4.6 Traffic screen be marked in the template to highlight the need for it in urban areas if K-Rail will be placed. Consult with Traffic Design. The SBd-10 median widening in Redlands is adding about 20 min. additional delay from motorist distraction due to the lack of gawk screen. Placement must not impede sight distance for work zone ingress/egress. The screen may not be desireable in high wind areas.
4/5/2006	Tab 3, 1 - PAC changed from Supplemental Work to "Show in State Furnished" due to HQ OE insistence. Rose Melgoza concurred. CL appeared to concur. SP
4/5/2006	3/17/06 change reversed by Patrick Hsu
1/20/2006	COZEEP or MAZEEP. From BEES 066061 to 066062 - per HQ OE on 456611/Nick Skaf
12/9/2005	Clarified that major projects need to provide resources to TMC Unit 370
11/22/2005	Increased CFSP CHP rates per Harold Tupper for service outside FSP hours; added text to full closures to increase understanding. SP
8/27/2005	Showed SAFE and CHP CFSP $ for task orders.

20-Aug	Added "Local Agency will arrange CFSP w SAFE" in Tab 3, 3.3
8/18/2005	Added green fields for requestors
7/25/2005	Joette Wilson, AGPA, Inland Division Cozeep/Mazeep Coordinator, requested to be added to the email list. Border contact PENDING.
7/19/2005	Cyrin Kwong, D8 TMT Manager, asked that TMT be deleted as TMP tool from the D8 TMP template since TMT has been eliminated statewide. Even though TMT is shown in Table 1 on page 7 of 198 in the 5/1/04 revised TMP Guidelines, it is no longer available.
6/28/2005	Jerry Rivera, RCTC FSP Manager, does not want a cc of the TMP. He prefers a memo showing the days, dates, hours, etc. for the proposed CFSP.
6/17/2005	Tab 4, 5 changed DTM from Nhan to Dr. Ramakrishna Tadi. Marked and altered Tab 3, 4.13, DP wording. SP
4/4/2005	3/2.4 Section - SANBAG requested # and URL change for blue and white Rideshare guide signs
3/21/2005	RCTC's CFSP administrative cost is increasing from 5 to 8 %. SP
3/3/2005	Per Vicor Gau, D8 Cozeep Coordinator, and Ceslo Izquierdo, HQ Cozeep coordinator, SSP 12-225 has been eliminated - but not the funds for Cozeep. They still need to be shown under State/Agency furnished. Please contact Victor if you have questions. HQ OE eliminated the SSP per Construction. Local administered projects can retain it if they wish. (Though may not be advisable for the same reasons it was dropped by CT. SP)
2/8/2005	Cyrin Kwong: at 95% CC and speak with TMC/TMT manager if TOS elements, TMC, or TMT will be needed. Also see NOTE 5.
12/22/2004	Per Victor Gau's, D8 CTM, request, increased Cozeep hourly rate to $85/hr. At Pat's request, replaced orange and black CS-Ride with blue and white Rideshare guide signs since they can remain after construction, see 2.4 and 5.5. Still need to coordinate w Traffic Design and Ops groups. SP
8/16/2004	At Pat's request, changed text regarding callboxes and dropped cc to SAFEs. To be done by Callbox Coordinator. SP
8/12/2004	Added signature blocks regarding Office Engineer "Qualifying document".
8/6/2004	Per Nhan, Assist. DTM, added DTM Plan, etc. requirements. Changed TMC and TMT elements.
7/6/2004	Incorporated HQ draft Guidelines changes re peds and non-motorized traffic. SP
4/20/2004	Increased hourly CHP cost from $60 to 75. Watch for pay increases. Added line for command post. SP

NOTE 1: Daytime - $85/hr for one officer - loaded rate incl. benefits, overhead, some mileage. Nighttime - hourly cost is $170 because from 10 p.m. to 6 a.m. at least 2 officers will be required per unit (car). Minimum show up time is 4 hours, unless they are at the beginning or end of a shift. Desert or remote beats require extra hours for travel time and increase mileage costs! Cost to be increased as needed by the **Project Engineer in consultation with the CHP**. If you require several officers, you also may have to pay for a Sergeant. Each project must bring the $ for its Cozeep needs. If CT AAA, then the CT/CHP Interagency can be used. If local Agency AAA, they must enter into their own agreement w CHP for Cozeep. **RE** - please meet with the Cozeep Sergeant ahead of time. Also discuss any special needs besides conventional Cozeep - for example, request a "Traffic officer", not a "Cozeep officer" to direct traffic at an adjacent off ramp to reduce backup into the work area, etc. If CFSP is involved, contact the Inland Division CHP FSP Coordinator. Cozeep Formula:

{ [((#of days)*(# of hrs)*(1 officer)) + ((#of nights)*(# of hrs)*(2 officers))] }*$85/hr

Cozeep guidelines - see 2-215 in http://www.dot.ca.gov/hq/construc/manual2001/chapter2/chp2_2.pdf

NOTE 2: Discuss with Traffic Design so signs are added to the Construction signs LS and shown on the appropriate plan sheet.

NOTE 3: TBD = Cost to be determined/added by the Project Engineer

NOTE 4: Please contact **Mr. Manoj Kar, the District 8 Call box Coordinator**, 909 383-6237, if call box access will be affected, e.g. when extending MBGR end treatments. Also, if too many call boxes need to be taken out of service, additional mitigation may be needed, such as Agency paying the SAFE to temporarily relocate them to areas with adequate shoulders; pay CHP to increase patrols in the area (ECOZEEP), etc. Mr. Kar also has a Callbox Notification form you can use to contact the SAFE's, RCTC and/or SANBAG.

NOTE 5: Incident use will override Construction use. TMC staff overtime needed. Proposed use requires written approval from TMC Manager before the 270 Phase, as well as allocation of resources. See http://www.dot.ca.gov/dist8/tmc/webmap.htm for existing CMS.

BOTTOM

TMP Data Sheet instructions

USE THE LATEST TEMPLATE. CAUTION: many cells have formulas built in.

Tab 1

Select correct project phase in Line 1. Line 4 - insert project specific file ID. Line 7 - insert project EA and date. Fill out rest of sheet as needed EXCEPT the line that says TMP ESTIMATE because the amount flows in from tab 3.

Tab 2

Select No, Yes, maybe, but do not override amounts because they flow from Tab 3.

Tab 3

Mark as needed. In 1 - PAC - insert lumpsums in line 9 unless you prefer to show $ for individual items. In D8, the PAC $ are shown separately for Public Affairs (PA) and Construction Liaison (CL).

ATTACHMENT N

Stage Construction Index Sheets

Dist	COUNTY	ROUTE	POST MILES TOTAL PROJECT	SHEET No.	TOTAL SHEETS
08	SBd	10	25.3/27.3		

REGISTERED CIVIL ENGINEER DATE

PLANS APPROVAL DATE

REGISTERED PROFESSIONAL ENGINEER No. Exp. CIVIL STATE OF CALIFORNIA

THE STATE OF CALIFORNIA OR ITS OFFICERS OR AGENTS SHALL NOT BE RESPONSIBLE FOR THE ACCURACY OR COMPLETENESS OF SCANNED COPIES OF THIS PLAN SHEET.

SANBAG
1170 W. 3rd Street
2nd Floor
San Bernardino, CA 92410

RMC, INC.
6 Hutton Centre Drive
Suite 1250
Santa Ana, CA 92707

·CONSTRUCTION NOTES: (THIS STAGE ONLY)

1. CONSTRUCT TIPPECANOE Ave. UC BRIDGE
2. CONSTRUCT SAN TIMOTEO CREEK STRUCTURE
3. CONSTRUCT TEMPORARY DRAINAGE CHANNEL
4. CONSTRUCT PROPOSED BOX CULVERT
5. CONSTRUCT PROPOSED RETAINING WALL
6. CONSTRUCT MAINLINE WIDENING
7. CONSTRUCT GORE IMPROVEMENT
8. CONSTRUCT PROPOSED RAMP WIDENING

SECTION A-A
NO SCALE

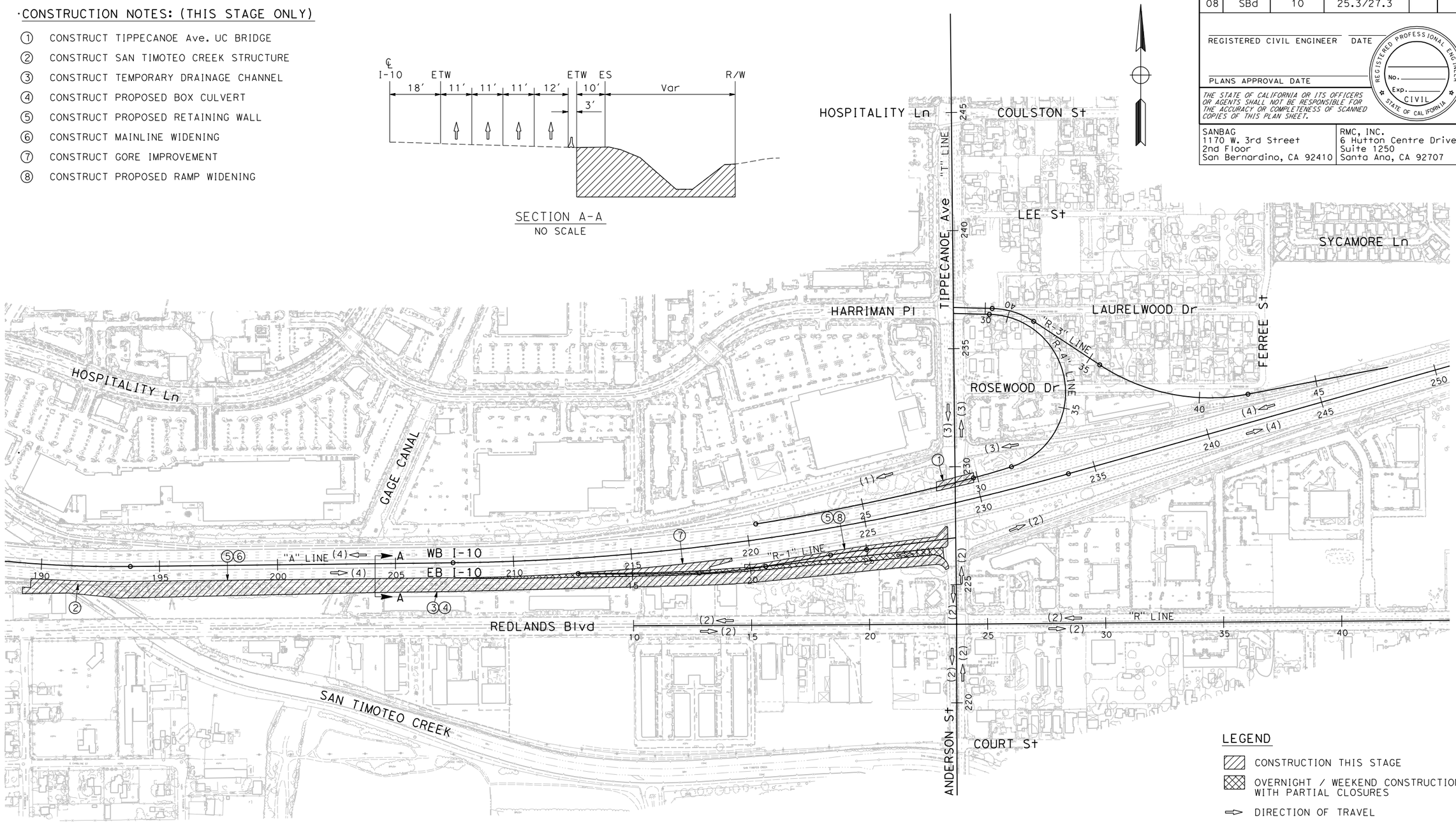

LEGEND

- CONSTRUCTION THIS STAGE
- OVERNIGHT / WEEKEND CONSTRUCTION WITH PARTIAL CLOSURES
- DIRECTION OF TRAVEL
- (N) NUMBER OF LANES

THIS PLAN ACCURATE FOR STAGE CONSTRUCTION ONLY.

STAGE CONSTRUCTION (STAGE 1)

SCALE 1" = 400′

SC- 1

REVISED BY | DATE REVISED | CALCULATED-DESIGNED BY | CHECKED BY | CONSULTANT FUNCTIONAL SUPERVISOR

STATE OF CALIFORNIA - DEPARTMENT OF TRANSPORTATION

Caltrans

LAST REVISION 00-00-00 | DATE PLOTTED => 5/21/2009 | TIME PLOTTED => 4:12:31 PM

BORDER LAST REVISED 4/11/2008 | RELATIVE BORDER SCALE IS IN INCHES 0 1 2 3 | USERNAME => $(USER) | DGN FILE => ...\844810ma01.dgn | CU 08250 | EA 448100

Dist	COUNTY	ROUTE	POST MILES TOTAL PROJECT	SHEET No.	TOTAL SHEETS
08	SBd	10	25.3/27.3		

REGISTERED CIVIL ENGINEER DATE

PLANS APPROVAL DATE

REGISTERED PROFESSIONAL ENGINEER No. Exp. CIVIL STATE OF CALIFORNIA

THE STATE OF CALIFORNIA OR ITS OFFICERS OR AGENTS SHALL NOT BE RESPONSIBLE FOR THE ACCURACY OR COMPLETENESS OF SCANNED COPIES OF THIS PLAN SHEET.

SANBAG
1170 W. 3rd Street
2nd Floor
San Bernardino, CA 92410

RMC, INC.
6 Hutton Centre Drive
Suite 1250
Santa Ana, CA 92707

·CONSTRUCTION NOTES: (THIS STAGE ONLY)

1. CONSTRUCT PROPOSED SB ANDERSON St WIDENING
2. CONSTRUCT PROPOSED EB REDLANDS Blvd WIDENING
3. CONSTRUCT PROPOSED NB ANDERSON St WIDENING
4. CONSTRUCT PROPOSED WB REDLANDS Blvd WIDENING
5. CONSTRUCT PROPOSED MEDIAN IMPROVEMENT

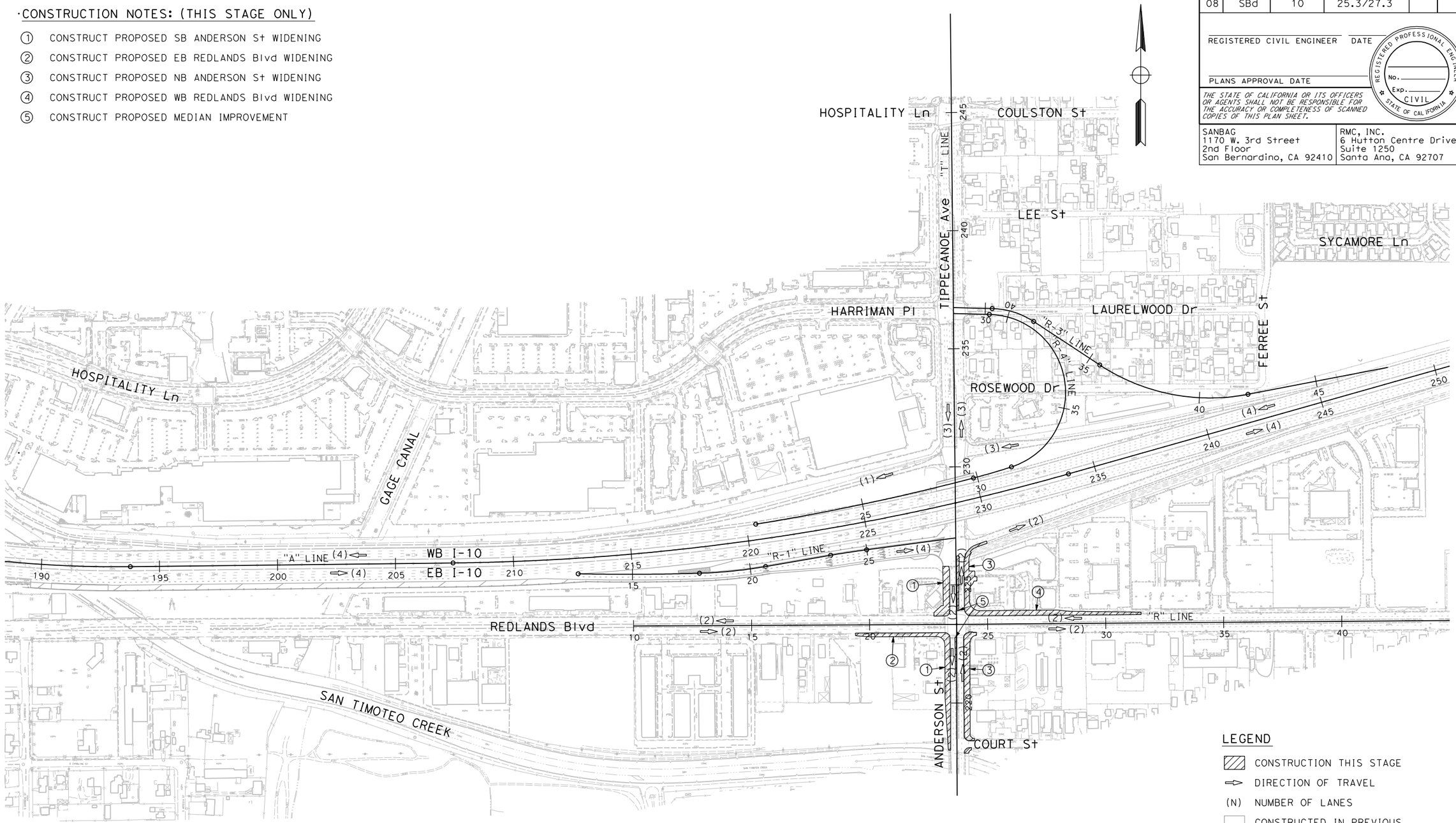

LEGEND

- CONSTRUCTION THIS STAGE
- DIRECTION OF TRAVEL
- (N) NUMBER OF LANES
- CONSTRUCTED IN PREVIOUS STAGES

THIS PLAN ACCURATE FOR STAGE CONSTRUCTION ONLY.

STAGE CONSTRUCTION (STAGE 2)

SCALE 1" = 400'

SC-2

REVISED BY	DATE REVISED

CALCULATED-DESIGNED BY

CHECKED BY

SUPERVISOR

CONSULTANT FUNCTIONAL SUPERVISOR

STATE OF CALIFORNIA - DEPARTMENT OF TRANSPORTATION

Caltrans

LAST REVISION 00-00-00

DATE PLOTTED => 5/21/2009
TIME PLOTTED => 4:13:57 PM

Dist	COUNTY	ROUTE	POST MILES TOTAL PROJECT	SHEET No.	TOTAL SHEETS
08	SBd	10	25.3/27.3		

REGISTERED CIVIL ENGINEER DATE

PLANS APPROVAL DATE

REGISTERED PROFESSIONAL ENGINEER No. Exp. CIVIL STATE OF CALIFORNIA

THE STATE OF CALIFORNIA OR ITS OFFICERS OR AGENTS SHALL NOT BE RESPONSIBLE FOR THE ACCURACY OR COMPLETENESS OF SCANNED COPIES OF THIS PLAN SHEET.

SANBAG
1170 W. 3rd Street
2nd Floor
San Bernardino, CA 92410

RMC, INC.
6 Hutton Centre Drive
Suite 1250
Santa Ana, CA 92707

·CONSTRUCTION NOTES: (THIS STAGE ONLY)

① CONSTRUCT PROPOSED WB OFF-RAMP

② CONSTRUCT PROPOSED LAURELWOOD Dr REALIGNMENT

③ CONSTRUCT PROPOSED NB TIPPECANOE Ave. WIDENING

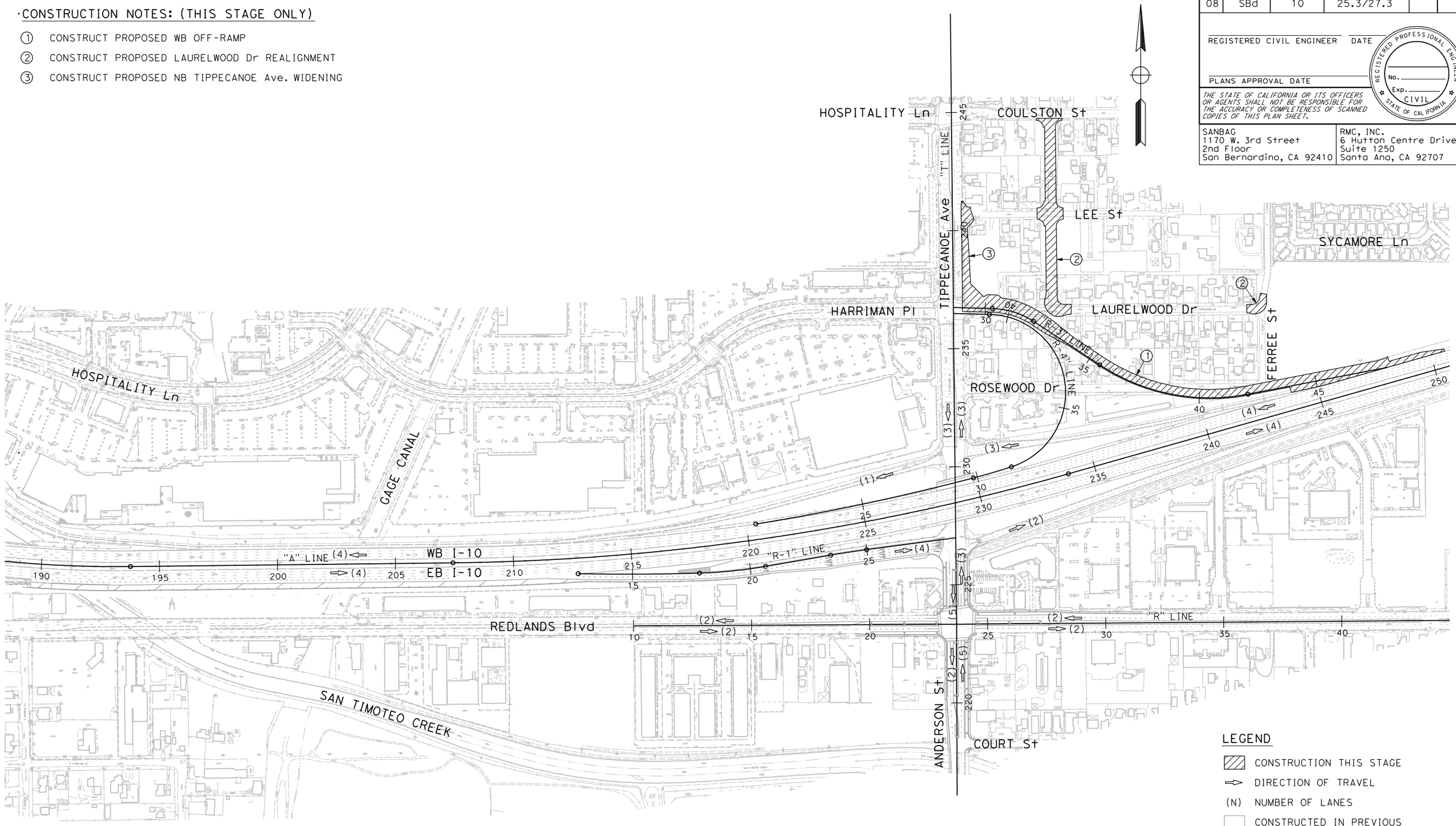

LEGEND

- CONSTRUCTION THIS STAGE
- DIRECTION OF TRAVEL
- (N) NUMBER OF LANES
- CONSTRUCTED IN PREVIOUS STAGES

THIS PLAN ACCURATE FOR STAGE CONSTRUCTION ONLY.

STAGE CONSTRUCTION (STAGE 3)

SCALE 1" = 400'

SC-3

REVISED BY | DATE REVISED

CALCULATED-DESIGNED BY | CHECKED BY

SUPERVISOR | CONSULTANT FUNCTIONAL SUPERVISOR

STATE OF CALIFORNIA - DEPARTMENT OF TRANSPORTATION

Caltrans

LAST REVISION 00-00-00 | DATE PLOTTED => 5/21/2009 | TIME PLOTTED => 4:15:39 PM

Dist	COUNTY	ROUTE	POST MILES TOTAL PROJECT	SHEET No.	TOTAL SHEETS
08	SBd	10	25.3/27.3		

REGISTERED CIVIL ENGINEER DATE

PLANS APPROVAL DATE

REGISTERED PROFESSIONAL ENGINEER No. Exp. CIVIL STATE OF CALIFORNIA

THE STATE OF CALIFORNIA OR ITS OFFICERS OR AGENTS SHALL NOT BE RESPONSIBLE FOR THE ACCURACY OR COMPLETENESS OF SCANNED COPIES OF THIS PLAN SHEET.

SANBAG
1170 W. 3rd Street
2nd Floor
San Bernardino, CA 92410

RMC, INC.
6 Hutton Centre Drive
Suite 1250
Santa Ana, CA 92707

·CONSTRUCTION NOTES: (THIS STAGE ONLY)

1. CONSTRUCT PROPOSED WB LOOP ON-RAMP
2. CONSTRUCT PROPOSED NB TIPPECANOE Ave. WIDENING
3. CONSTRUCT GORE IMPROVEMENT

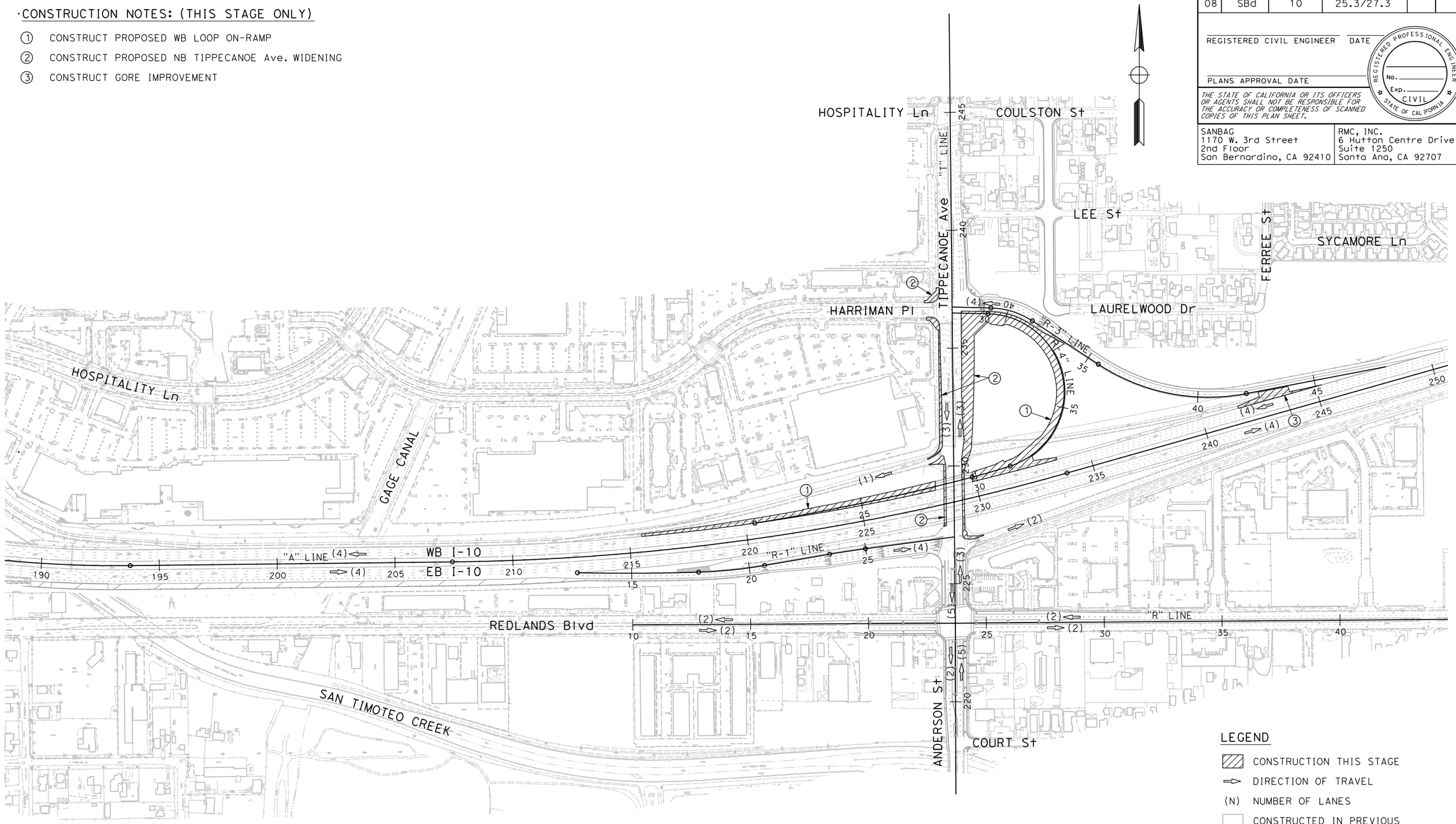

LEGEND

- CONSTRUCTION THIS STAGE
- DIRECTION OF TRAVEL
- (N) NUMBER OF LANES
- CONSTRUCTED IN PREVIOUS STAGES

STAGE CONSTRUCTION (STAGE 4)

SCALE 1" = 400'

SC-4

THIS PLAN ACCURATE FOR STAGE CONSTRUCTION ONLY.

REVISED BY	DATE REVISED

CALCULATED-DESIGNED BY

CHECKED BY

CONSULTANT FUNCTIONAL SUPERVISOR

STATE OF CALIFORNIA - DEPARTMENT OF TRANSPORTATION

Caltrans

LAST REVISION 00-00-00

DATE PLOTTED => 5/21/2009
TIME PLOTTED => 4:20:06 PM

Dist	COUNTY	ROUTE	POST MILES TOTAL PROJECT	SHEET No.	TOTAL SHEETS
08	SBd	10	25.3/27.3		

REGISTERED CIVIL ENGINEER DATE

PLANS APPROVAL DATE

REGISTERED PROFESSIONAL ENGINEER No. Exp. CIVIL STATE OF CALIFORNIA

THE STATE OF CALIFORNIA OR ITS OFFICERS OR AGENTS SHALL NOT BE RESPONSIBLE FOR THE ACCURACY OR COMPLETENESS OF SCANNED COPIES OF THIS PLAN SHEET.

SANBAG
1170 W. 3rd Street
2nd Floor
San Bernardino, CA 92410

RMC, INC.
6 Hutton Centre Drive
Suite 1250
Santa Ana, CA 92707

·CONSTRUCTION NOTES: (THIS STAGE ONLY)

① CONSTRUCT PROPOSED MEDIAN IMPROVEMENT

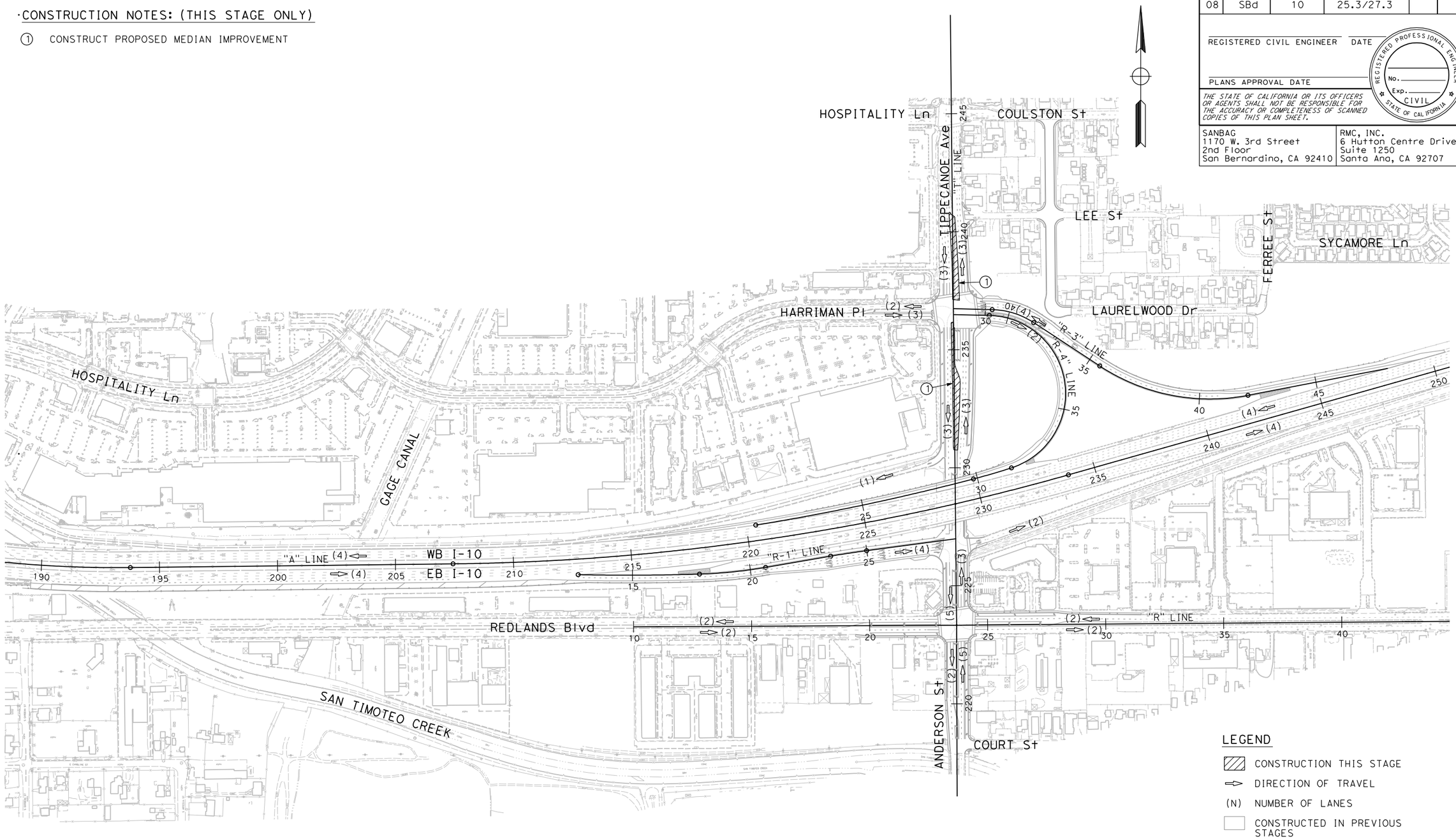

LEGEND

- CONSTRUCTION THIS STAGE
- DIRECTION OF TRAVEL
- (N) NUMBER OF LANES
- CONSTRUCTED IN PREVIOUS STAGES

THIS PLAN ACCURATE FOR STAGE CONSTRUCTION ONLY.

STAGE CONSTRUCTION (STAGE 5)

SCALE 1" = 400'

SC- 5

STATE OF CALIFORNIA - DEPARTMENT OF TRANSPORTATION

Caltrans

CONSULTANT FUNCTIONAL SUPERVISOR

CALCULATED-DESIGNED BY

CHECKED BY

REVISED BY

DATE REVISED

LAST REVISION 00-00-00

DATE PLOTTED => 5/21/2009
TIME PLOTTED => 4:18:57 PM

BORDER LAST REVISED 4/11/2008

RELATIVE BORDER SCALE IS IN INCHES 0 1 2 3

USERNAME => $(USER)
DGN FILE => ...\844810ma05.dgn

CU 08250

EA 448100

ATTACHMENT O

Life Cycle Cost Analysis Forms

Life Cycle Cost Analysis Form

Alternative 1 (Preferred Alternative) *Delete either "Pavement-alternative-identified-to-program-project cost" "or "Preferred Alternative" as appropriate for project milestone.*

Briefly describe the pavement strategy and other unique features

Mainline Widening Rigid Pavement (JPCP): 1.25' Jointed Plain Concrete Pavement (JPCP) over 0.10' Hot Mix Asphalt Bond Breaker (HMABB) over 0.50' Lean Concrete Base (LCB) over 0.70' AS.

Pavement Design Life:	40	Years			
Initial Construction Costs:			$	1,179,728	
Initial Project Support Costs:			$	212,351	
Future Maintenance & Rehabilitation Costs:**			$	43,012	
TOTAL AGENCY COSTS:					$ 1,435,090
USER COSTS:					$ 2,857,210
TOTAL LIFE-CYCLE COSTS:					$ 4,292,300

Alternative 2:*

Briefly describe the pavement strategy and differences in scope from Alternative 1.

Mainline Widening Rigid Pavment (CRCP): 1.10' CRCP over 0.50' Hot Mix Asphalt Class A (HMA-A) over 0.70' AS.

Pavement Design Life:	40	Years			
			$	1,516,793	
Initial Project Support Costs:			$	273,023	
Future Maintenance & Rehabilitation Costs:**			$	8,685	
TOTAL AGENCY COSTS:					$ 1,798,500
USER COSTS:					$ 3,589,130
TOTAL LIFE-CYCLE COSTS:					$ 5,387,630

Reason that this is not Alternative 1:

It has a higher total Life-Cycle cost.

* Repeat as often as needed, with appropriate numbering, to cover all pavement alternatives investigated.

** Includes both future maintenance, construction, and project support costs.

Life Cycle Cost Analysis Form

Alternative 1 (Preferred Alternative) *Delete either "Pavement-alternative-identified-to-program-project cost" "or "Preferred Alternative" as appropriate for project milestone.*
Briefly describe the pavement strategy and other unique features

Ramp Reconstruction Flexible Pavement: 0.20' Rubberized Hot Mix Asphalt (RHMA-G) over 0.80' HMA-C over 0.50' AB.

Pavement Design Life:	40	Years			
Initial Construction Costs:			$	2,344,528	
Initial Project Support Costs:			$	422,015	
Future Maintenance & Rehabilitation Costs:**			$	219,557	
TOTAL AGENCY COSTS:					$ 2,986,100
USER COSTS:					$ 65,930
TOTAL LIFE-CYCLE COSTS:					$ 3,052,030

Alternative 2:*
Briefly describe the pavement strategy and differences in scope from Alternative 1.

Ramp Reconstruction Rigid Pavement: 0.85' JPCP over 0.10' HMA BB over 0.40' LCB.

Pavement Design Life:	40	Years			
Initial Construction Costs:			$	2,967,000	
Initial Project Support Costs:			$	534,060	
Future Maintenance & Rehabilitation Costs:**			$	43,030	
TOTAL AGENCY COSTS:					$ 3,544,090
USER COSTS:					$ 52,090
TOTAL LIFE-CYCLE COSTS:					$ 3,596,180

Reason that this is not Alternative 1:

It has a higher total Life-Cycle cost.

* Repeat as often as needed, with appropriate numbering, to cover all pavement alternatives investigated.

** Includes both future maintenance, construction, and project support costs.