Dist	COUNTY	ROUTE	POST MILES TOTAL PROJECT	SHEET No.	TOTAL SHEETS
8	SBd	10	33.3/R36.9	XXX	XXX

INDEX OF PLANS

DESCRIPTION
TITLE & LOCATION
TYPICAL CROSS SECTIONS
KEY MAP AND LINE INDEX
LAYOUT PLANS
PROFILE AND SUPERELEVATION DIAGRAMS
CONSTRUCTION DETAILS
EROSION CONTROL PLANS
EROSION CONTROL QUANTITIES
CONTOUR GRADING PLANS
DRAINAGE PLANS
DRAINAGE PROFILES
DRAINAGE DETAILS
DRAINAGE QUANTITIES
UTILITY PLANS
CONSTRUCTION AREA SIGNS
STAGE CONSTRUCTION AND TRAFFIC HANDLING PLANS
STAGE CONSTRUCTION AND TRAFFIC HANDLING QUANTITIES
DETOUR PLANS
PAVEMENT DELINEATION PLANS
PAVEMENT DELINEATION QUANTITIES
SIGN PLANS
SIGN DETAILS
SIGN QUANTITIES
SUMMARY OF QUANTITIES
RETAINING WALL PLANS, DETAILS, QUANTITIES AND BORING LOGS
HIGHWAY PLANTING PLANS
LIGHTING AND SIGN ILLUMINATION PLANS

STATE OF CALIFORNIA

DEPARTMENT OF TRANSPORTATION

PROJECT PLANS FOR CONSTRUCTION ON

STATE HIGHWAY

99% SUBMITTAL
IN SAN BERNARDINO COUNTY
IN REDLANDS AND YUCAIPA
FROM 0.1 MILES EAST OF FORD STREET
TO 0.1 MILES WEST OF LIVE OAK CANYON ROAD

TO BE SUPPLEMENTED BY STANDARD PLANS DATED MAY 2006

LOCATION MAP

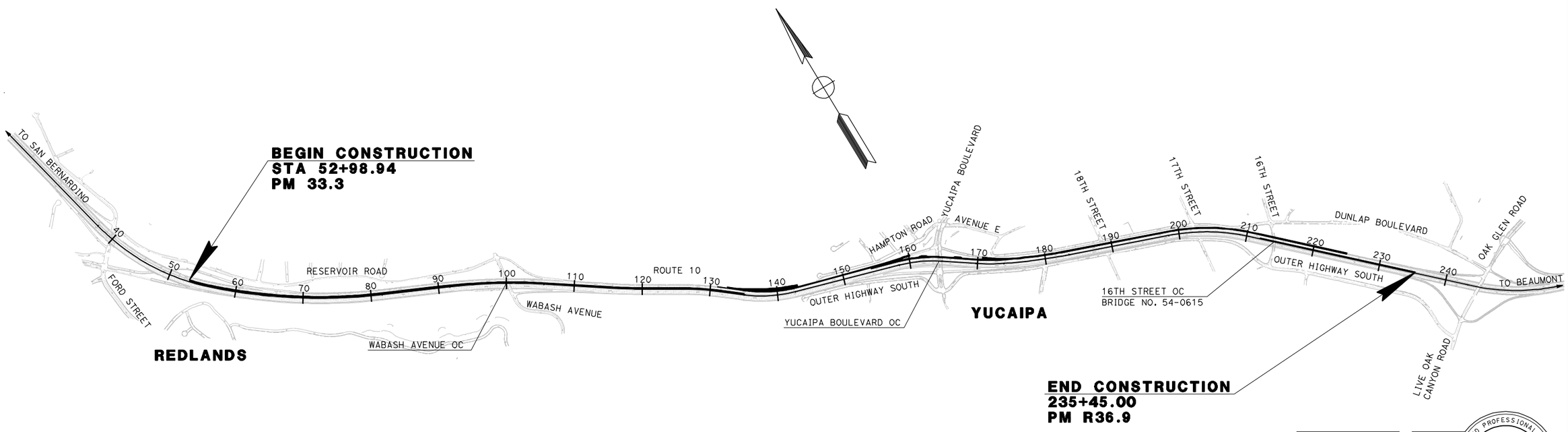

PROJECT ENGINEER DATE
REGISTERED CIVIL ENGINEER

PLANS APPROVAL DATE

THE STATE OF CALIFORNIA OR ITS OFFICERS OR AGENTS SHALL NOT BE RESPONSIBLE FOR THE ACCURACY OR COMPLETENESS OF ELECTRONIC COPIES OF THIS PLAN SHEET.

REGISTERED PROFESSIONAL ENGINEER
No.
Exp.
CIVIL
STATE OF CALIFORNIA

SANBAG
1170 WEST 3RD STREET 2ND FLOOR
SAN BERNARDINO, CA 92410

CH2M HILL
2280 MARKET STREET SUITE 200
RIVERSIDE, CA 92501

CONTRACT No. **08-0F1504**

APPROVED AS TO IMPACT ON STATE FACILITIES AND CONFORMANCE WITH APPLICABLE STATE STANDARDS AND PRACTICES AND THAT TECHNICAL OVERSIGHT WAS PERFORMED.

CALTRANS DESIGN OVERSIGHT APPROVAL | LICENSE Exp DATE | DATE SIGNED

CONSULTANT DESIGN ENGINEER | REGISTRATION No. | MARK HAGER

THE CONTRACTOR SHALL POSSESS THE CLASS (OR CLASSES) OF LICENSE AS SPECIFIED IN THE "NOTICE TO CONTRACTORS."

NO SCALE

LAST REVISION | DATE PLOTTED => 15-JUL-2009 | TIME PLOTTED => 00:00

Dist	COUNTY	ROUTE	POST MILES TOTAL PROJECT	SHEET No.	TOTAL SHEETS
8	SBd	10	33.3/R36.9	XXX	XXX

REGISTERED CIVIL ENGINEER DATE

PLANS APPROVAL DATE

REGISTERED PROFESSIONAL ENGINEER No. Exp. CIVIL STATE OF CALIFORNIA

THE STATE OF CALIFORNIA OR ITS OFFICERS OR AGENTS SHALL NOT BE RESPONSIBLE FOR THE ACCURACY OR COMPLETENESS OF ELECTRONIC COPIES OF THIS PLAN SHEET.

SANBAG
1170 WEST 3RD STREET
2ND FLOOR
SAN BERNARDINO, CA 92410

CH2MHILL
2280 MARKET STREET
SUITE 200
RIVERSIDE, CA 92501

NOTES:

1. DIMENSIONS OF THE STRUCTURAL SECTIONS ARE SUBJECT TO TOLERANCES SPECIFIED IN THE STANDARD SPECIFICATIONS.
2. SUPERELEVATIONS ARE SHOWN ON THE PROFILE SHEETS, OR AS DIRECTED BY THE ENGINEER.
3. MATCH CROSS SLOPES OF EXISTING TRAVELED WAY IN SUPERELEVATED SECTIONS OR AS DIRECTED BY THE ENGINEER.
4. SLOPE ROUNDING IS TO BE DONE WHERE THERE IS SUFFICIENT R/W. DO NOT USE IF R/W IS NOT SUFFICIENT.
5. FOR LOCATION, TYPE, AND TRANSITIONS OF HMA DIKE, MBGR, AND CONCRETE BARRIER, SEE LAYOUT PLANS.
6. FOR LOCATIONS OF RETAINING WALLS, SEE RETAINING WALL PLANS.
7. WHERE EXISTING RAMPS ARE TO BE RECONSTRUCTED AND THEY CONTAIN AN EXISTING LAYER OF ASPHALT TREATED PERMEABLE BASE, THIS LAYER SHALL BE REMOVED.
8. STRUCTURAL SECTIONS ARE CONTINUOUS FROM STATION TO STATION.
9. FOR PORTLAND CEMENT CONCRETE LONGITUDINAL JOINTS (DOWELED TRANSVERSE JOINTS), SEE STANDARD PLAN P1. WHERE PAVEMENT SECTION EXCEEDS A WIDTH OF 15', A LONGITUDINAL JOINT WILL BE PLACED 12' FROM THE SAWCUT. FOR LONGITUDINAL JOINTS AT RAMP MERGE, SEE STANDARD PLAN P35.
10. FOR BIOSWALE DIMENSIONS AND LOCATIONS, SEE DRAINAGE PLANS.
11. GRIND EXISTING CONCRETE PAVEMENT PRIOR TO PLACEMENT OF TEMPORARY K-RAIL FOR CONSTRUCTION. SEE TRAFFIC HANDLING PLANS FOR SEQUENCE OF GRINDING WORK TO BE DONE. FOR GRINDING LOCATIONS AND DETAIL, SEE SHEET C-5, C-6, AND C-7.
12. FOR ISOLATION JOINT DETAIL BETWEEN EXISTING CONCRETE BARRIER AND NEW PCCP, SEE SHEET C-1 FOR DETAILS.
13. LONGITUDINAL CONTACT JOINT TO EXISTING PCC WILL UTILIZE TIE BAR DETAILS FROM STANDARD PLANS.

EXISTING STRUCTURAL SECTIONS

[A] 0.75' PCC
0.33' RMCTB
0.50' CLASS 2 AS

[B] 0.67' PCC
0.42' RMCTB
0.50' CLASS 2 AS

[C] 0.25' AC (TYPE B)
0.66' CLASS 2 AB
0.50' CLASS 2 AS

[D] 0.83' PCC
0.08' AC (TYPE A)
0.38' LCB
0.63' CLASS 2 AS

[E] 0.20' AC (TYPE A)

[F] 0.50' AC (TYPE B)
0.20' ATPB
0.79' CLASS 2 AB
0.95' CLASS 2 AS

TYPICAL STRUCTURAL SECTIONS

[1] 1.00' PCC
0.10' HMA (TYPE A) [BOND BREAKER]
0.50' LCB
0.70 CLASS 2 AS

[2] 1.10' PCC
0.10' HMA (TYPE A) [BOND BREAKER]
0.50' LCB
0.70' CLASS 2 AS

[3] 0.10' HMA (OPEN GRADED)
1.00' HMA (TYPE A)
0.50' CLASS 2 AB

[4] 0.10' HMA (OPEN GRADED)
1.00' HMA (TYPE A)
0.50' CLASS 2 AB

[5] 0.25' VEGETATION CONTROL (MINOR CONCRETE)

[6] 0.83' PCC
0.08' HMA (TYPE A) [BOND BREAKER]
0.38' LCB
0.63' CLASS 2 AS

[7] 0.25' HMA (TYPE A)
0.66' CLASS 2 AB
0.50' CLASS 2 AS

[8] 1.00' HMA (TYPE A)
0.60' CLASS 2 AS

[9] 0.25' HMA (MISCELLANEOUS AREA)

[10] 0.50' HMA (MISCELLANEOUS AREA)

DESIGN DESIGNATION (ROUTE 10 WESTBOUND)

2011 AM PEAK VOLUME = 5,288-6,714 (NO HOV)
2011 PM PEAK VOLUME = 4,023-4,995 (NO HOV)

2035 AM PEAK VOLUME = 8,093-10,690 (INCLUDES HOV)
2035 PM PEAK VOLUME = 6,643-8,388 (INCLUDES HOV)

D=60% (AM PEAK HOUR)
T=5%
V=70 MPH

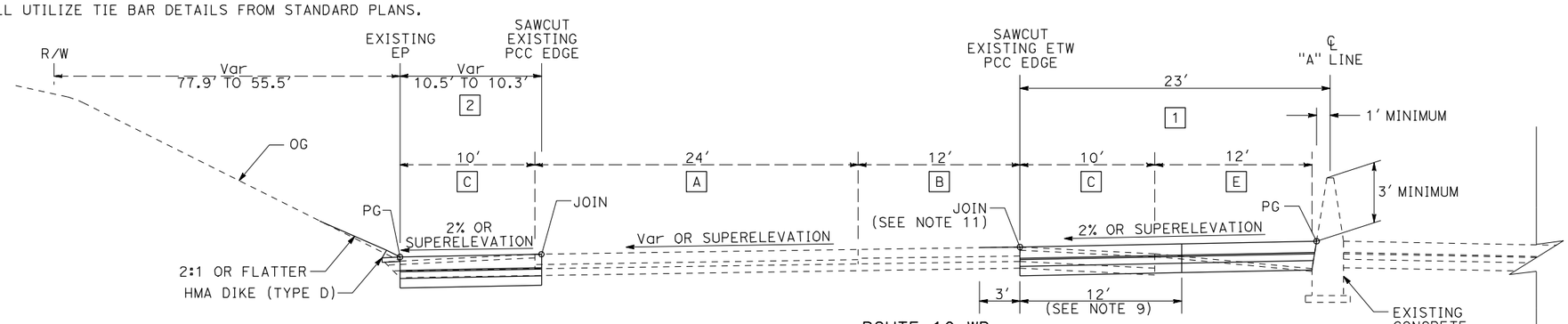

ROUTE 10 WB
STA "A" 131+00.00 TO STA "A" 132+60.00

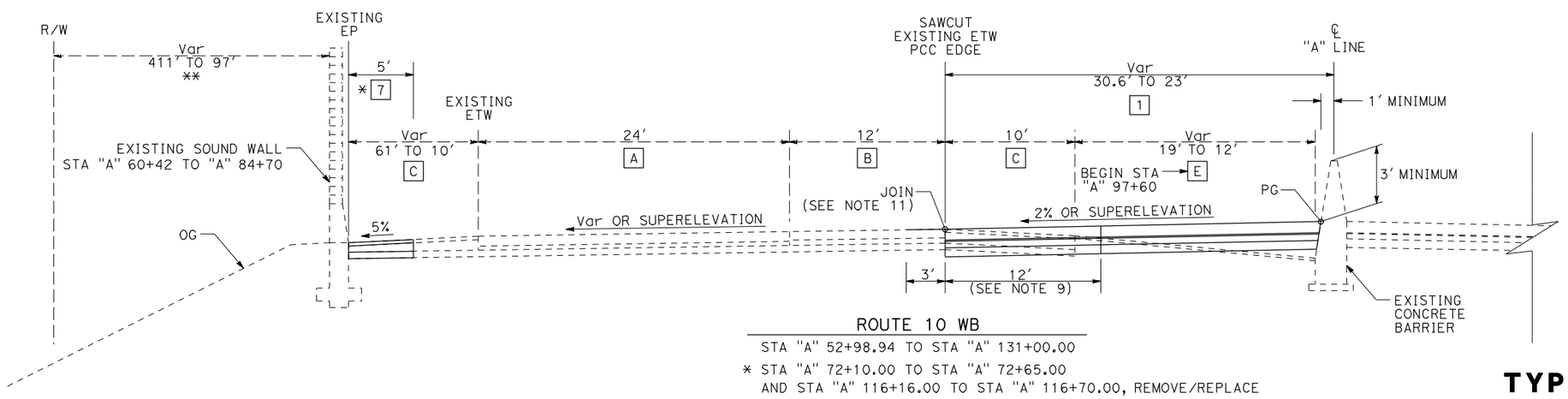

ROUTE 10 WB
STA "A" 52+98.94 TO STA "A" 131+00.00
* STA "A" 72+10.00 TO STA "A" 72+65.00
AND STA "A" 116+16.00 TO STA "A" 116+70.00, REMOVE/REPLACE PAVEMENT SECTION FOR DRAINAGE INLET INSTALLATION
** BIOFILTRATION SWALE, SEE DRAINAGE PLANS FOR DETAILS

TYPICAL CROSS SECTIONS

NO SCALE

X-1

STATE OF CALIFORNIA - DEPARTMENT OF TRANSPORTATION
Caltrans

CONSULTANT FUNCTIONAL SUPERVISOR: MARK HAGER

CALCULATED-DESIGNED BY | CHECKED BY | REVISED BY | DATE REVISED

LAST REVISION | DATE PLOTTED => 15-JUL-2009

RELATIVE BORDER SCALE IS IN INCHES 0 1 2 3

USERNAME => atruong

CU 08220 | EA 0F1504

Dist	COUNTY	ROUTE	POST MILES TOTAL PROJECT	SHEET No.	TOTAL SHEETS
8	SBd	10	33.3/R36.9	XXX	XXX

REGISTERED CIVIL ENGINEER DATE

PLANS APPROVAL DATE

REGISTERED PROFESSIONAL ENGINEER No. Exp. CIVIL STATE OF CALIFORNIA

THE STATE OF CALIFORNIA OR ITS OFFICERS OR AGENTS SHALL NOT BE RESPONSIBLE FOR THE ACCURACY OR COMPLETENESS OF ELECTRONIC COPIES OF THIS PLAN SHEET.

SANBAG
1170 WEST 3RD STREET
2ND FLOOR
SAN BERNARDINO, CA 92410

CH2MHILL
2280 MARKET STREET
SUITE 200
RIVERSIDE, CA 92501

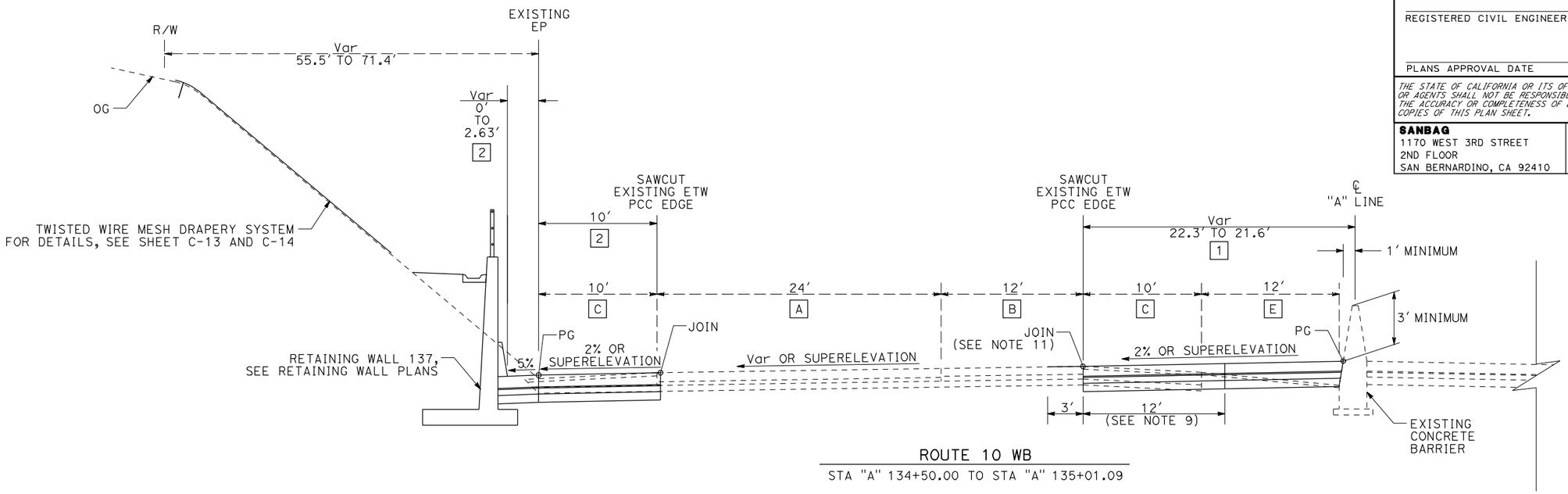

ROUTE 10 WB

STA "A" 134+50.00 TO STA "A" 135+01.09

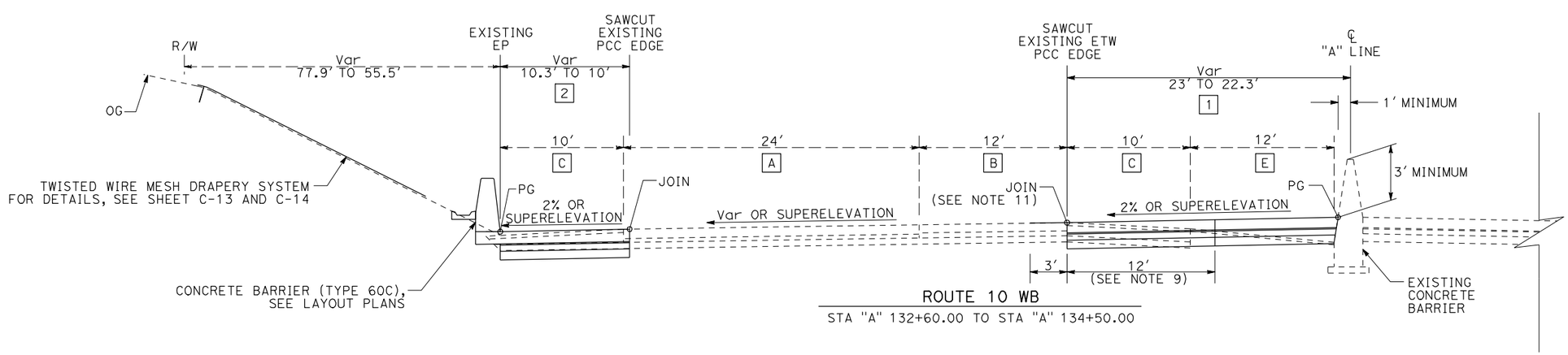

ROUTE 10 WB

STA "A" 132+60.00 TO STA "A" 134+50.00

TYPICAL CROSS SECTIONS

NO SCALE

X-2

STATE OF CALIFORNIA - DEPARTMENT OF TRANSPORTATION

Caltrans

CONSULTANT FUNCTIONAL SUPERVISOR: MARK HAGER

CALCULATED-DESIGNED BY

CHECKED BY

REVISED BY

DATE REVISED

LAST REVISION 00-00-00

DATE PLOTTED => 15-JUL-2009

RELATIVE BORDER SCALE IS IN INCHES 0 1 2 3

USERNAME => atruong

CU 08220

EA 0F1504

Dist	COUNTY	ROUTE	POST MILES TOTAL PROJECT	SHEET No.	TOTAL SHEETS
8	SBd	10	33.3/R36.9	XXX	XXX

REGISTERED CIVIL ENGINEER DATE

PLANS APPROVAL DATE

REGISTERED PROFESSIONAL ENGINEER No. Exp. CIVIL STATE OF CALIFORNIA

THE STATE OF CALIFORNIA OR ITS OFFICERS OR AGENTS SHALL NOT BE RESPONSIBLE FOR THE ACCURACY OR COMPLETENESS OF ELECTRONIC COPIES OF THIS PLAN SHEET.

SANBAG
1170 WEST 3RD STREET
2ND FLOOR
SAN BERNARDINO, CA 92410

CH2MHILL
2280 MARKET STREET
SUITE 200
RIVERSIDE, CA 92501

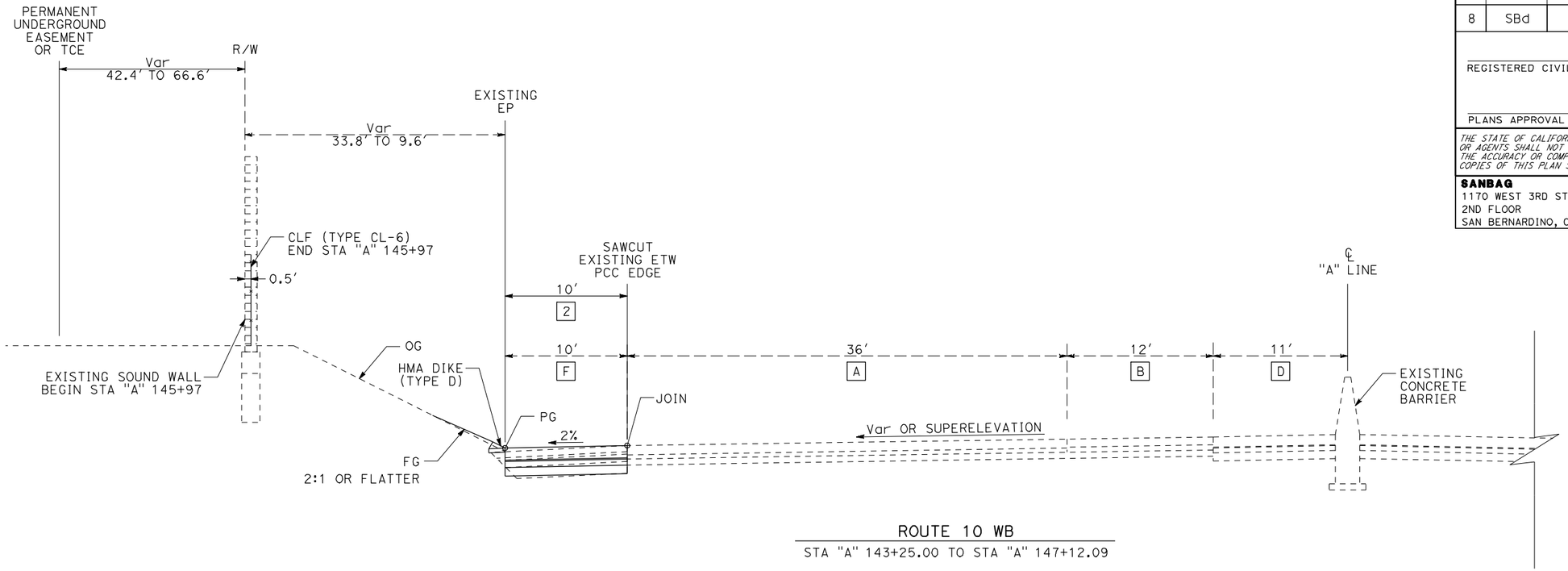

ROUTE 10 WB

STA "A" 143+25.00 TO STA "A" 147+12.09

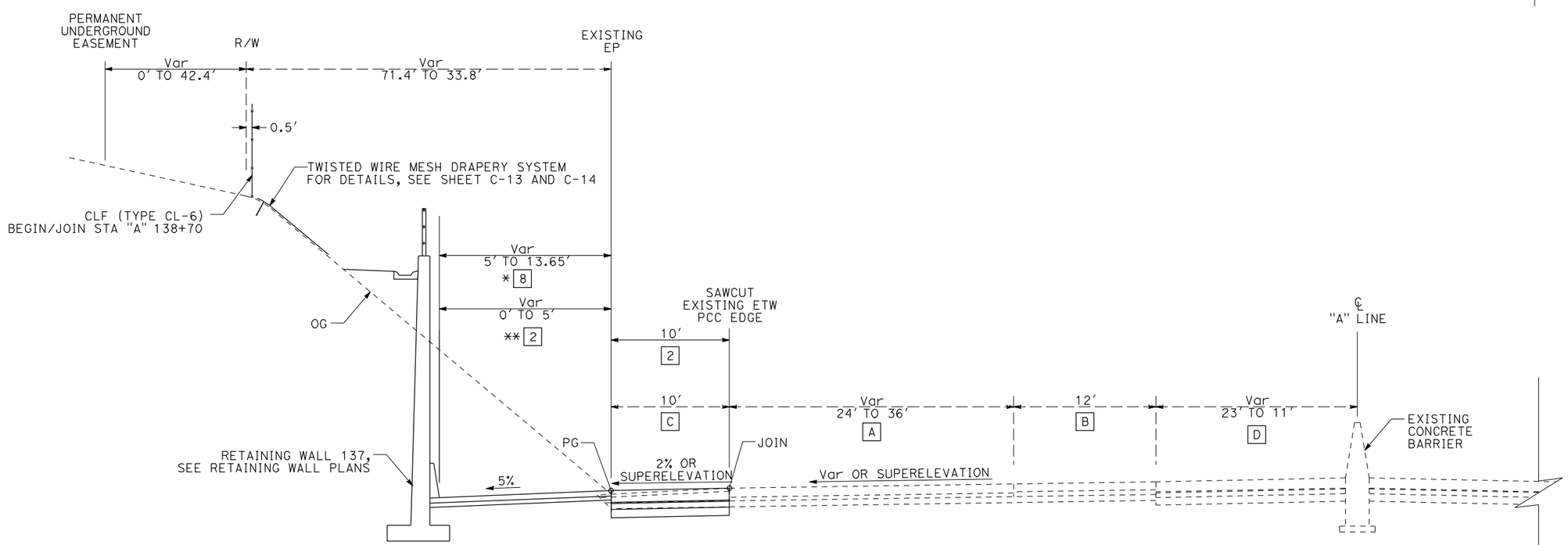

ROUTE 10 WB

STA "A" 135+01.09 TO STA "A" 143+25.00
* STA "A" 135+41.81 TO STA "A" 142+33.43
** STA "A" 135+01.09 TO STA "A" 135+41.81
AND STA "A" 142+33.43 TO STA "A" 143+25.00

TYPICAL CROSS SECTIONS

NO SCALE

X-3

STATE OF CALIFORNIA - DEPARTMENT OF TRANSPORTATION

Caltrans

CONSULTANT FUNCTIONAL SUPERVISOR: MARK HAGER

CALCULATED-DESIGNED BY | CHECKED BY

REVISED BY | DATE REVISED

LAST REVISION | DATE PLOTTED => 15-JUL-2009

RELATIVE BORDER SCALE IS IN INCHES 0 1 2 3

USERNAME => atruong

CU 08220

EA 0F1504

Dist	COUNTY	ROUTE	POST MILES TOTAL PROJECT	SHEET No.	TOTAL SHEETS
8	SBd	10	33.3/R36.9	XXX	XXX

REGISTERED CIVIL ENGINEER DATE

PLANS APPROVAL DATE

REGISTERED PROFESSIONAL ENGINEER No. Exp. CIVIL STATE OF CALIFORNIA

THE STATE OF CALIFORNIA OR ITS OFFICERS OR AGENTS SHALL NOT BE RESPONSIBLE FOR THE ACCURACY OR COMPLETENESS OF ELECTRONIC COPIES OF THIS PLAN SHEET.

SANBAG
1170 WEST 3RD STREET
2ND FLOOR
SAN BERNARDINO, CA 92410

CH2MHILL
2280 MARKET STREET
SUITE 200
RIVERSIDE, CA 92501

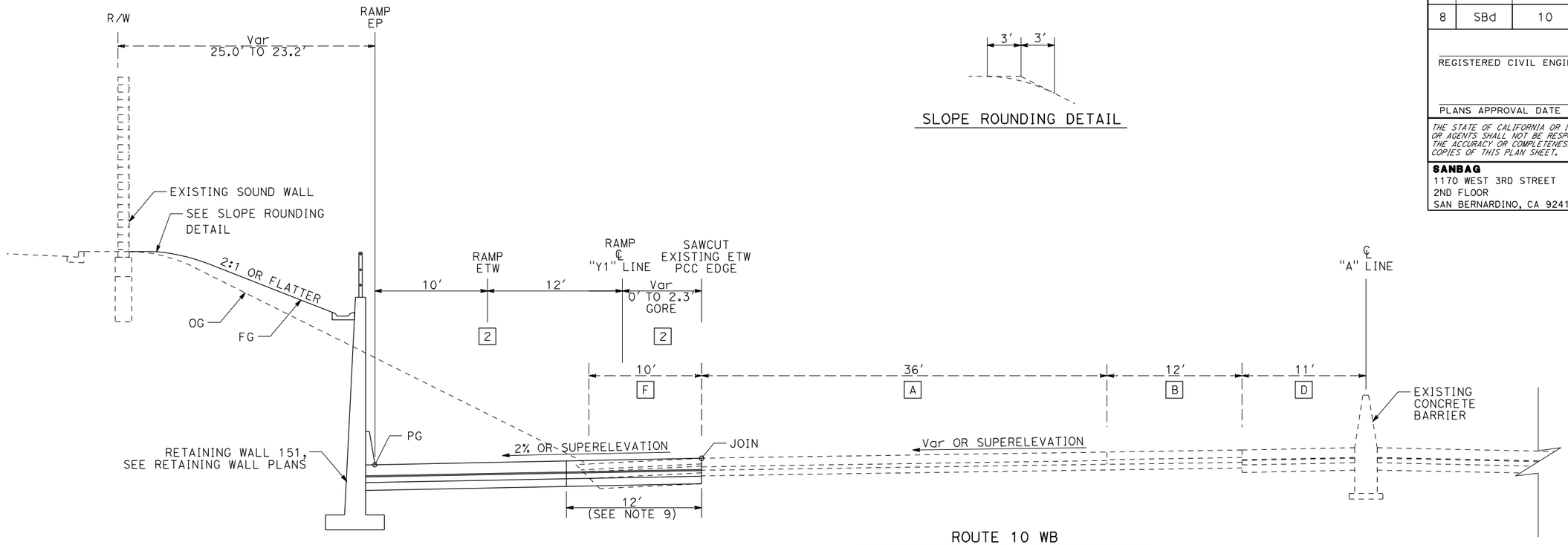

SLOPE ROUNDING DETAIL

3' 3'

ROUTE 10 WB

STA "A" 153+18.64 TO STA "A" 154+26.00

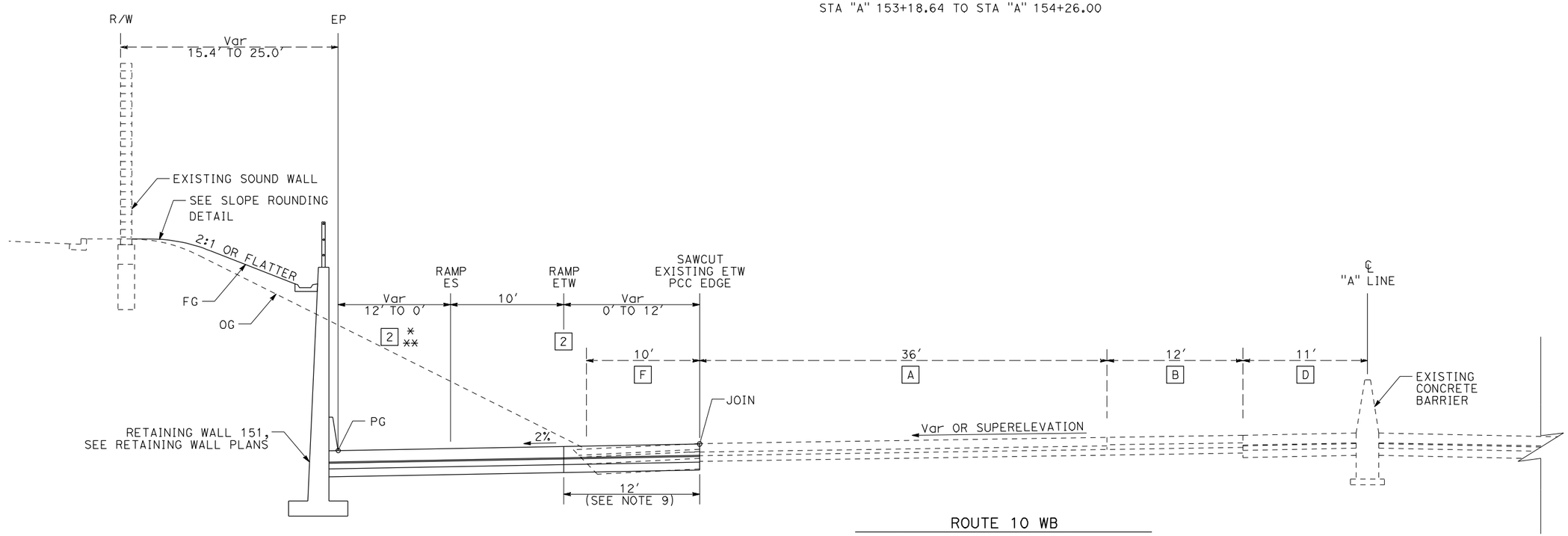

ROUTE 10 WB

STA "A" 147+12.09 TO STA "A" 153+18.64

* FROM STA "A" 146+97.00 TO STA "A" 147+24.00, ROCK BLANKET

** FROM STA "A" 147+24.00 TO STA "A" 147+75.00, 5

TYPICAL CROSS SECTIONS

NO SCALE

X-4

REVISED BY | DATE REVISED

CALCULATED-DESIGNED BY | CHECKED BY

CONSULTANT FUNCTIONAL SUPERVISOR: MARK HAGER

STATE OF CALIFORNIA - DEPARTMENT OF TRANSPORTATION

Caltrans

LAST REVISION | DATE PLOTTED => 15-JUL-2009

RELATIVE BORDER SCALE IS IN INCHES 0 1 2 3

USERNAME => atruong

CU 08220

EA 0F1504

Dist	COUNTY	ROUTE	POST MILES TOTAL PROJECT	SHEET No.	TOTAL SHEETS
8	SBd	10	33.3/R36.9	XXX	XXX

REGISTERED CIVIL ENGINEER DATE

PLANS APPROVAL DATE

REGISTERED PROFESSIONAL ENGINEER No. Exp. CIVIL STATE OF CALIFORNIA

THE STATE OF CALIFORNIA OR ITS OFFICERS OR AGENTS SHALL NOT BE RESPONSIBLE FOR THE ACCURACY OR COMPLETENESS OF ELECTRONIC COPIES OF THIS PLAN SHEET.

SANBAG
1170 WEST 3RD STREET
2ND FLOOR
SAN BERNARDINO, CA 92410

CH2MHILL
2280 MARKET STREET
SUITE 200
RIVERSIDE, CA 92501

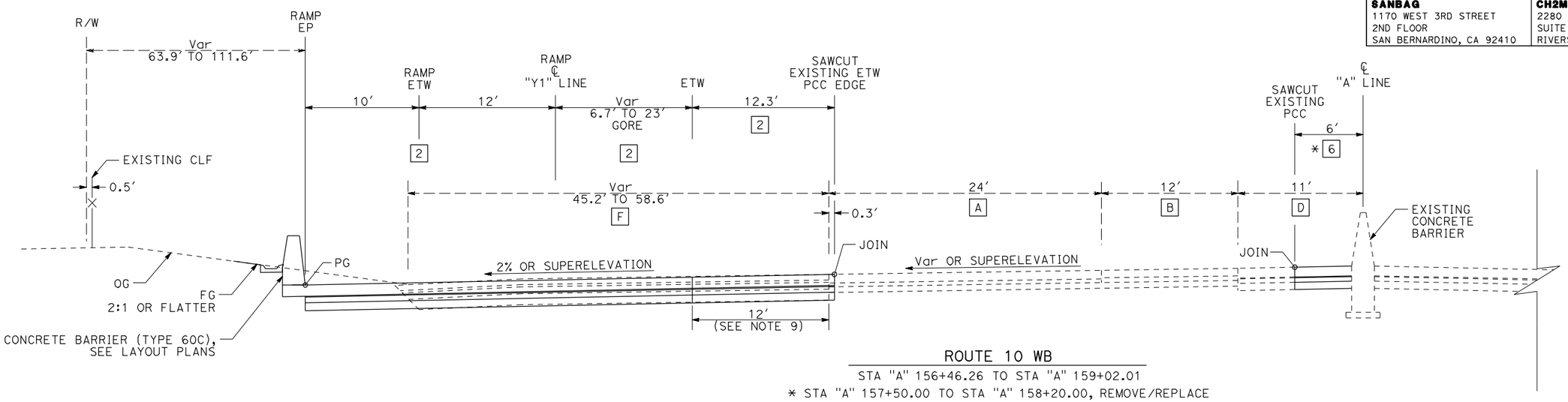

ROUTE 10 WB

STA "A" 156+46.26 TO STA "A" 159+02.01

* STA "A" 157+50.00 TO STA "A" 158+20.00, REMOVE/REPLACE PAVEMENT SECTION FOR DRAINAGE INLET INSTALLATION MATCH EXISTING CROSS-SLOPE

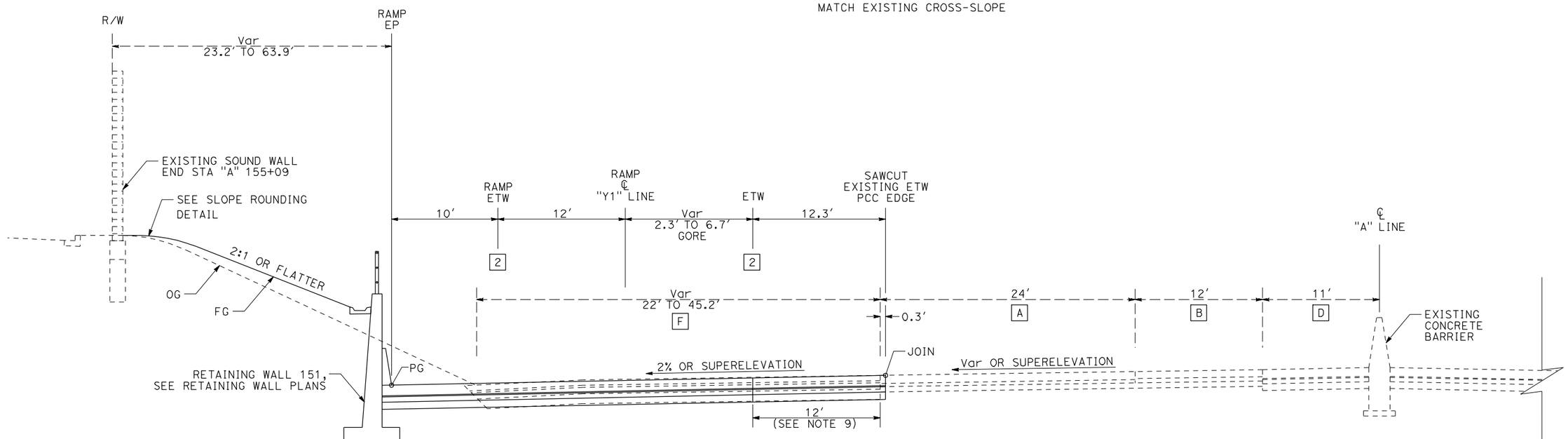

ROUTE 10 WB

STA "A" 154+26.00 TO STA "A" 156+46.26

TYPICAL CROSS SECTIONS

NO SCALE

X-5

STATE OF CALIFORNIA - DEPARTMENT OF TRANSPORTATION

Caltrans

CONSULTANT FUNCTIONAL SUPERVISOR: MARK HAGER

CALCULATED-DESIGNED BY | CHECKED BY

REVISED BY | DATE REVISED

LAST REVISION 00-00-00 | DATE PLOTTED => 15-JUL-2009

RELATIVE BORDER SCALE IS IN INCHES 0 1 2 3

USERNAME => atruong

CU 08220

EA 0F1504

Dist	COUNTY	ROUTE	POST MILES TOTAL PROJECT	SHEET No.	TOTAL SHEETS
8	SBd	10	33.3/R36.9	XXX	XXX

REGISTERED CIVIL ENGINEER DATE

PLANS APPROVAL DATE

REGISTERED PROFESSIONAL ENGINEER No. Exp. CIVIL STATE OF CALIFORNIA

THE STATE OF CALIFORNIA OR ITS OFFICERS OR AGENTS SHALL NOT BE RESPONSIBLE FOR THE ACCURACY OR COMPLETENESS OF ELECTRONIC COPIES OF THIS PLAN SHEET.

SANBAG
1170 WEST 3RD STREET
2ND FLOOR
SAN BERNARDINO, CA 92410

CH2MHILL
2280 MARKET STREET
SUITE 200
RIVERSIDE, CA 92501

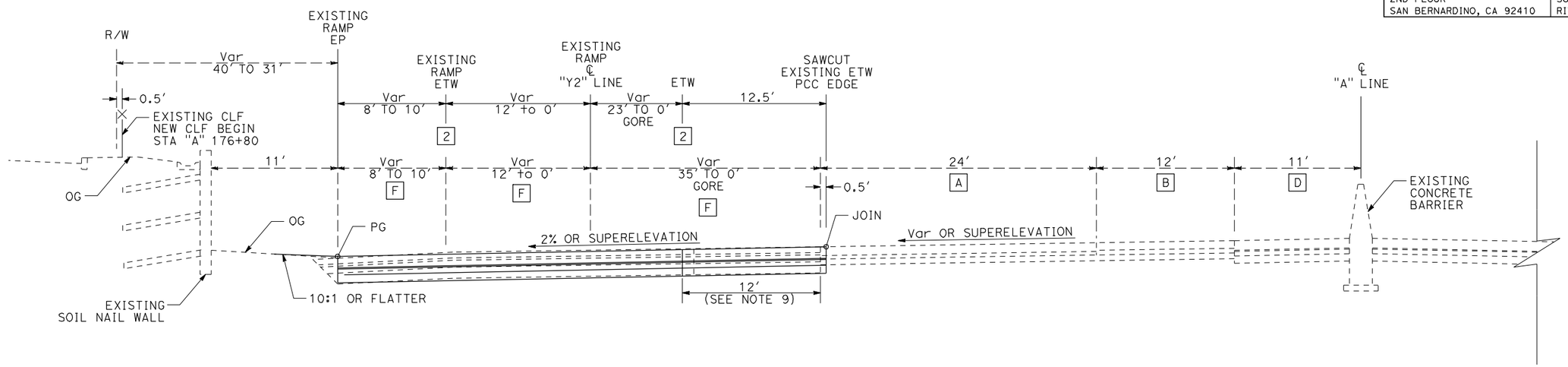

ROUTE 10 WB

STA "A" 170+66.33 TO STA "A" 177+00.28

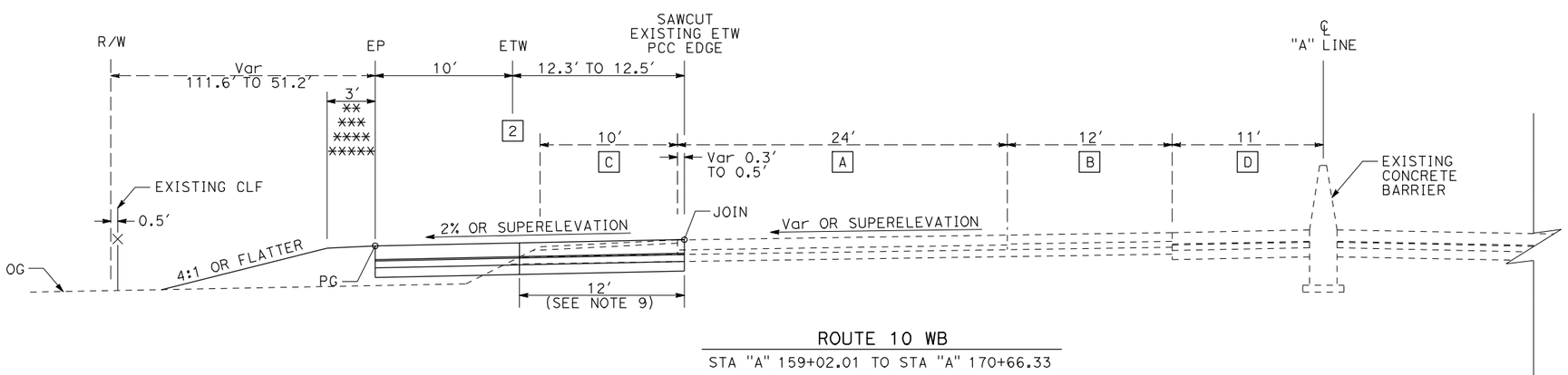

ROUTE 10 WB

STA "A" 159+02.01 TO STA "A" 170+66.33

** FROM STA "A" 159+02.01 TO STA "A" 159+80.00, ROCK BLANKET, VARIES FROM 9' TO 20'
*** FROM STA "A" 161+35.11 TO STA "A" 162+24.89, MAINTENANCE VEHICLE PULLOUT, VARIES FROM 0' TO 14', PAVEMENT [8]
**** FROM STA "A" 166+76.11 TO STA "A" 167+68.89, MAINTENANCE VEHICLE PULLOUT, VARIES FROM 0' TO 14', PAVEMENT [8]
***** FROM STA "A" 169+36.00 TO STA "A" 170+66.33, ROCK BLANKET, VARIES FROM 20' TO 9'

TYPICAL CROSS SECTIONS

NO SCALE

X-6

STATE OF CALIFORNIA - DEPARTMENT OF TRANSPORTATION

Caltrans

CONSULTANT FUNCTIONAL SUPERVISOR: MARK HAGER

CALCULATED-DESIGNED BY | CHECKED BY

REVISED BY | DATE REVISED

LAST REVISION | DATE PLOTTED => 15-JUL-2009

RELATIVE BORDER SCALE IS IN INCHES 0 1 2 3

USERNAME => atruong

CU 08220

EA 0F1504

Dist	COUNTY	ROUTE	POST MILES TOTAL PROJECT	SHEET No.	TOTAL SHEETS
8	SBd	10	33.3/R36.9	XXX	XXX

REGISTERED CIVIL ENGINEER DATE

PLANS APPROVAL DATE

REGISTERED PROFESSIONAL ENGINEER No. Exp. CIVIL STATE OF CALIFORNIA

THE STATE OF CALIFORNIA OR ITS OFFICERS OR AGENTS SHALL NOT BE RESPONSIBLE FOR THE ACCURACY OR COMPLETENESS OF ELECTRONIC COPIES OF THIS PLAN SHEET.

SANBAG
1170 WEST 3RD STREET
2ND FLOOR
SAN BERNARDINO, CA 92410

CH2MHILL
2280 MARKET STREET
SUITE 200
RIVERSIDE, CA 92501

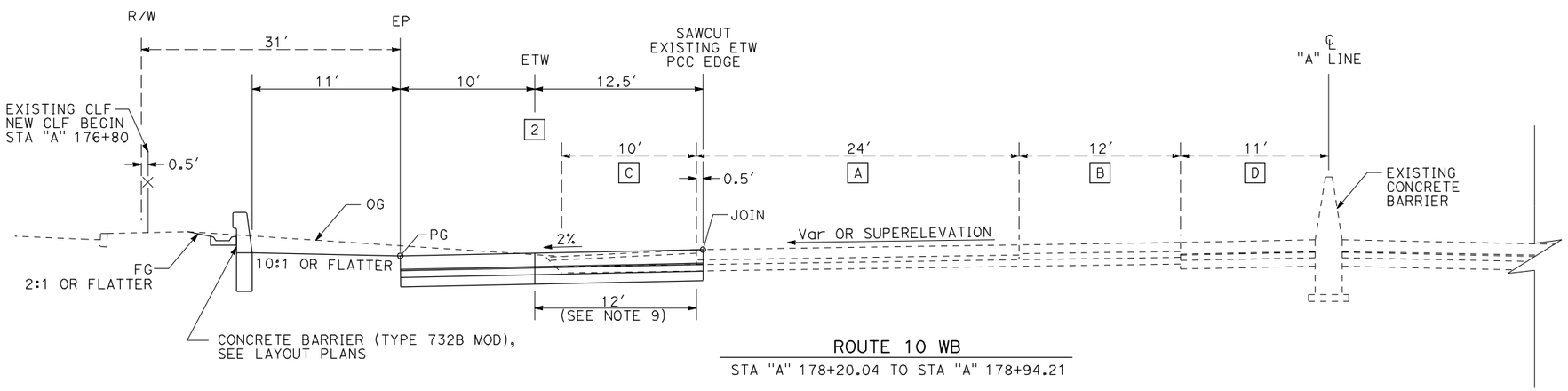

ROUTE 10 WB

STA "A" 178+20.04 TO STA "A" 178+94.21

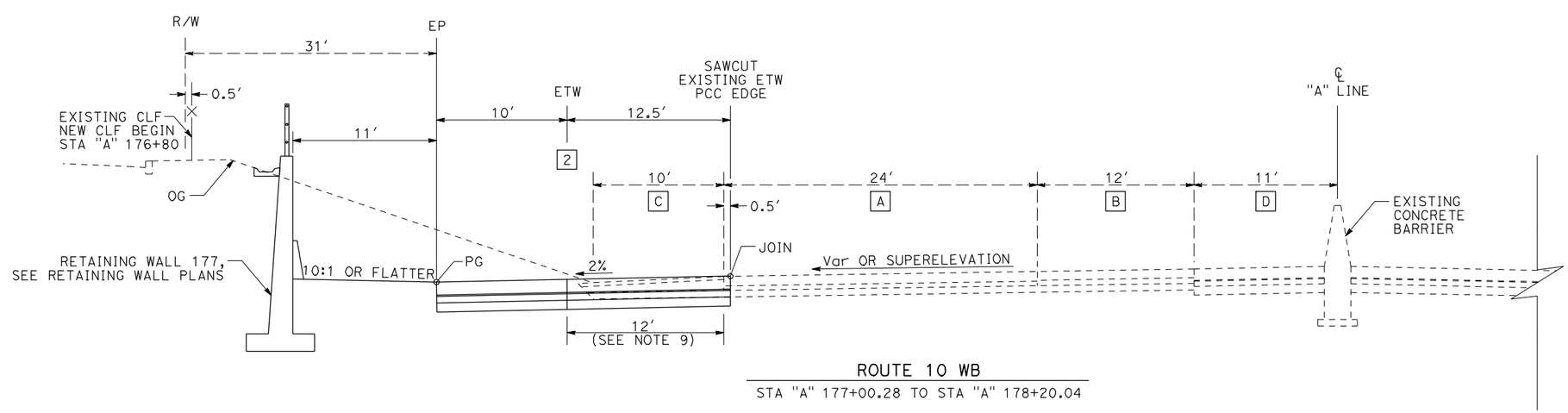

ROUTE 10 WB

STA "A" 177+00.28 TO STA "A" 178+20.04

TYPICAL CROSS SECTIONS

NO SCALE

X-7

REVISED BY	DATE REVISED

CALCULATED-DESIGNED BY	CHECKED BY

CONSULTANT FUNCTIONAL SUPERVISOR: MARK HAGER

STATE OF CALIFORNIA - DEPARTMENT OF TRANSPORTATION

Caltrans

LAST REVISION 00-00-00 | DATE PLOTTED => 15-JUL-2009

RELATIVE BORDER SCALE IS IN INCHES 0 1 2 3

USERNAME => atruong

CU 08220

EA 0F1504

Dist	COUNTY	ROUTE	POST MILES TOTAL PROJECT	SHEET No.	TOTAL SHEETS
8	SBd	10	33.3/R36.9	XXX	XXX

REGISTERED CIVIL ENGINEER DATE

PLANS APPROVAL DATE

REGISTERED PROFESSIONAL ENGINEER No. Exp. CIVIL STATE OF CALIFORNIA

THE STATE OF CALIFORNIA OR ITS OFFICERS OR AGENTS SHALL NOT BE RESPONSIBLE FOR THE ACCURACY OR COMPLETENESS OF ELECTRONIC COPIES OF THIS PLAN SHEET.

SANBAG
1170 WEST 3RD STREET
2ND FLOOR
SAN BERNARDINO, CA 92410

CH2MHILL
2280 MARKET STREET
SUITE 200
RIVERSIDE, CA 92501

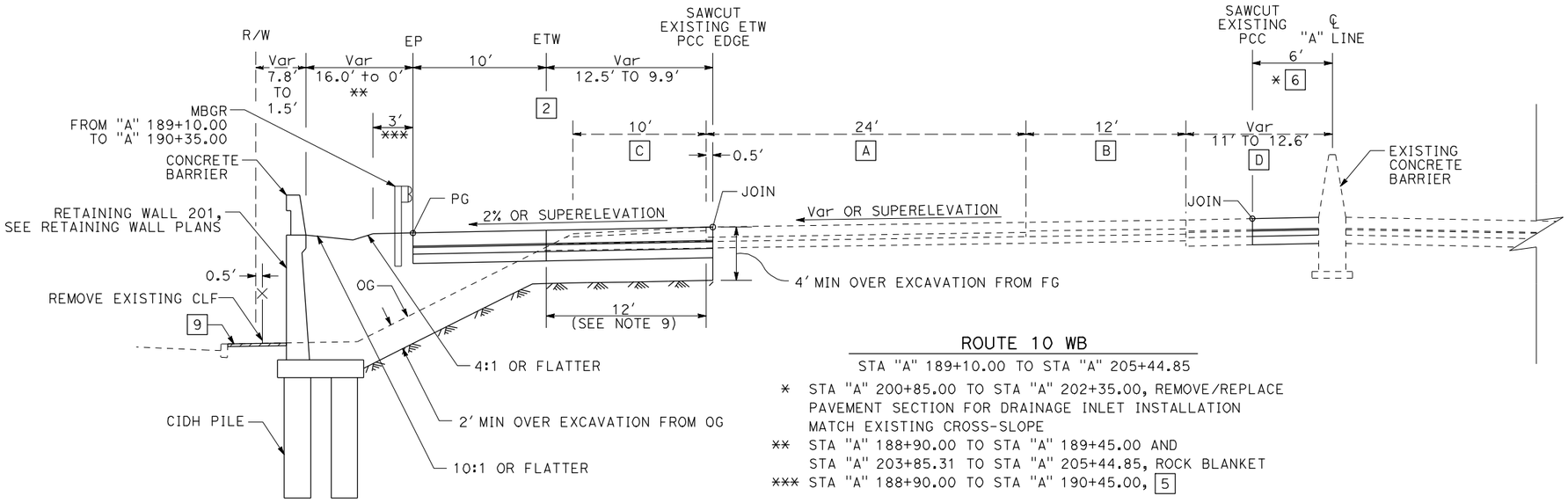

ROUTE 10 WB

STA "A" 189+10.00 TO STA "A" 205+44.85

* STA "A" 200+85.00 TO STA "A" 202+35.00, REMOVE/REPLACE PAVEMENT SECTION FOR DRAINAGE INLET INSTALLATION MATCH EXISTING CROSS-SLOPE

** STA "A" 188+90.00 TO STA "A" 189+45.00 AND STA "A" 203+85.31 TO STA "A" 205+44.85, ROCK BLANKET

*** STA "A" 188+90.00 TO STA "A" 190+45.00, 5

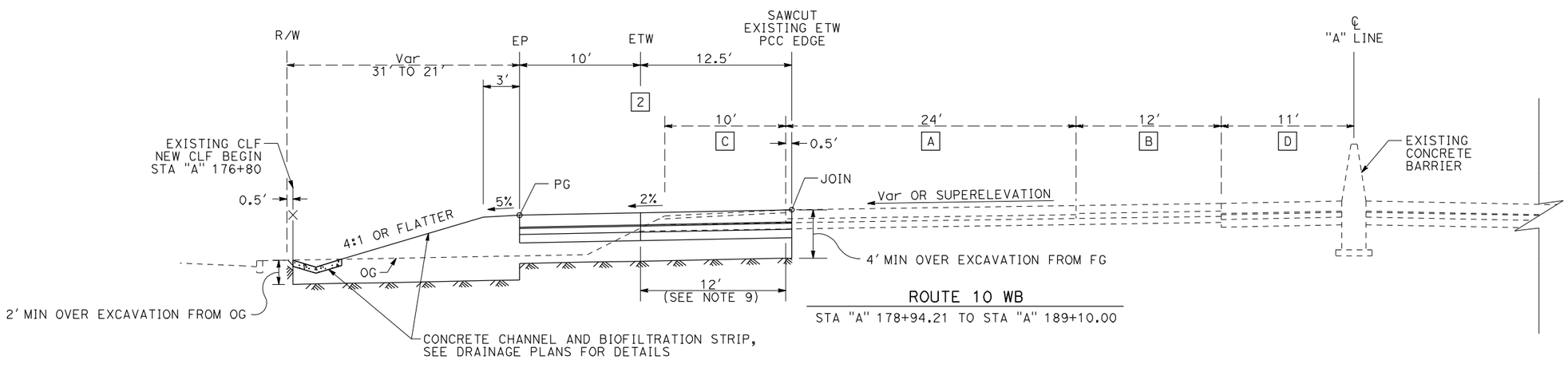

ROUTE 10 WB

STA "A" 178+94.21 TO STA "A" 189+10.00

TYPICAL CROSS SECTIONS

NO SCALE

X-8

REVISED BY	DATE REVISED

CALCULATED-DESIGNED BY | CHECKED BY

CONSULTANT FUNCTIONAL SUPERVISOR: MARK HAGER

STATE OF CALIFORNIA - DEPARTMENT OF TRANSPORTATION

Caltrans

LAST REVISION 00-00-00 | DATE PLOTTED => 15-JUL-2009 | TIME PLOTTED => 00:00

RELATIVE BORDER SCALE IS IN INCHES 0 1 2 3

USERNAME => atruong

CU 08220

EA 0F1504

Dist	COUNTY	ROUTE	POST MILES TOTAL PROJECT	SHEET No.	TOTAL SHEETS
8	SBd	10	33.3/R36.9	XXX	XXX

REGISTERED CIVIL ENGINEER DATE

PLANS APPROVAL DATE

REGISTERED PROFESSIONAL ENGINEER No. Exp. CIVIL STATE OF CALIFORNIA

THE STATE OF CALIFORNIA OR ITS OFFICERS OR AGENTS SHALL NOT BE RESPONSIBLE FOR THE ACCURACY OR COMPLETENESS OF ELECTRONIC COPIES OF THIS PLAN SHEET.

SANBAG
1170 WEST 3RD STREET
2ND FLOOR
SAN BERNARDINO, CA 92410

CH2MHILL
2280 MARKET STREET
SUITE 200
RIVERSIDE, CA 92501

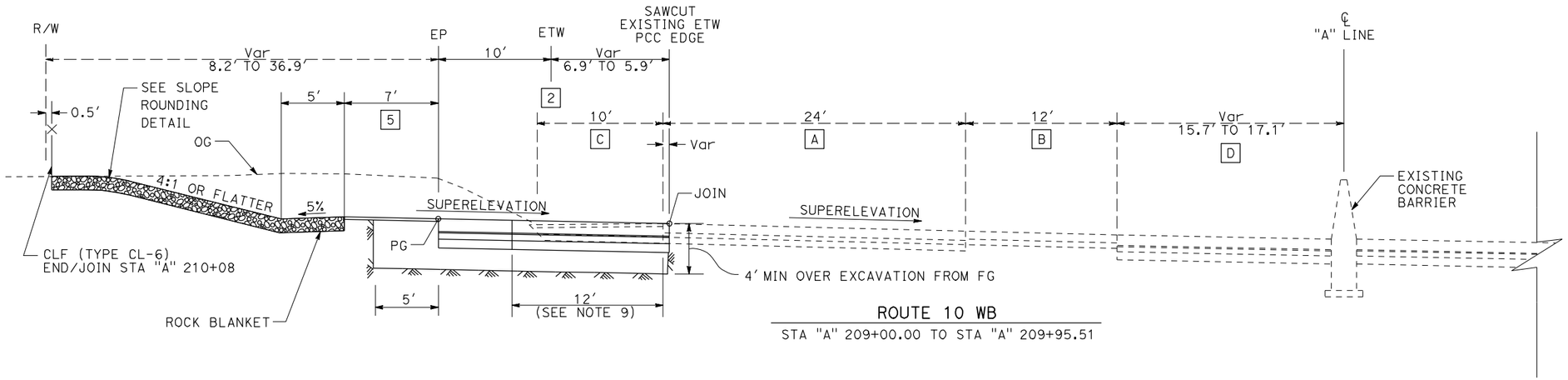

ROUTE 10 WB

STA "A" 209+00.00 TO STA "A" 209+95.51

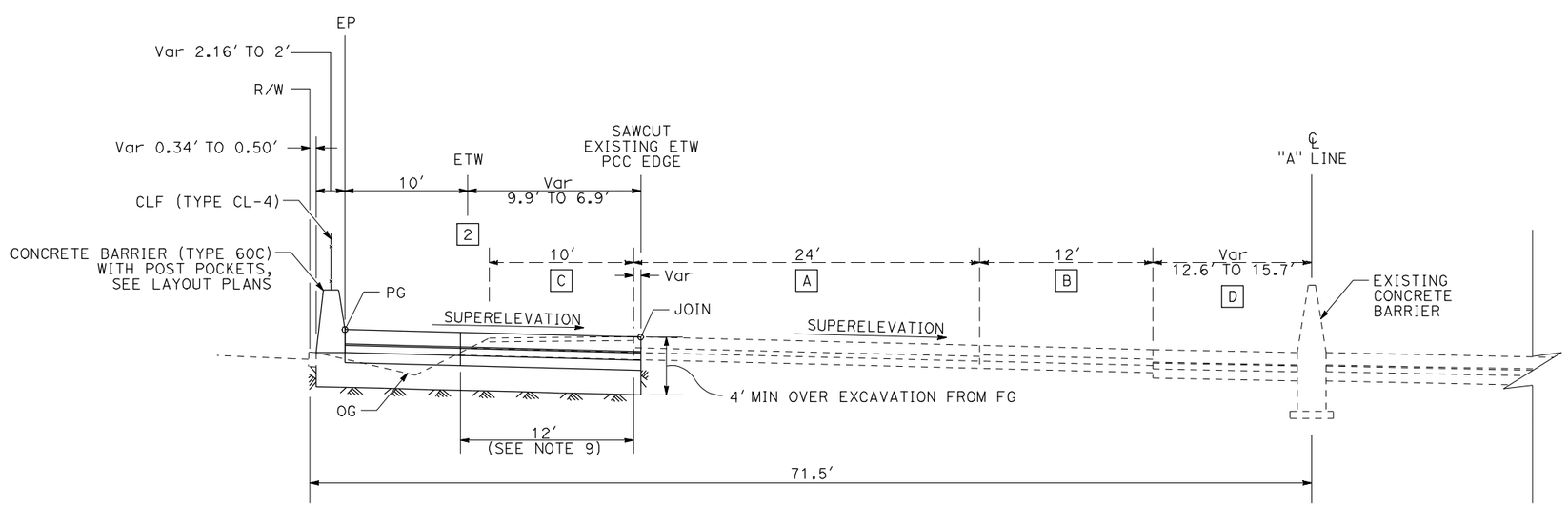

ROUTE 10 WB

STA "A" 205+44.85 TO STA "A" 209+00.00

TYPICAL CROSS SECTIONS

NO SCALE

X-9

REVISED BY | DATE REVISED

CALCULATED-DESIGNED BY | CHECKED BY

CONSULTANT FUNCTIONAL SUPERVISOR: MARK HAGER

STATE OF CALIFORNIA - DEPARTMENT OF TRANSPORTATION

Caltrans

LAST REVISION 00-00-00 | DATE PLOTTED => 15-JUL-2009

RELATIVE BORDER SCALE IS IN INCHES 0 1 2 3

USERNAME => atruong

CU 08220 | EA 0F1504

Dist	COUNTY	ROUTE	POST MILES TOTAL PROJECT	SHEET No.	TOTAL SHEETS
8	SBd	10	33.3/R36.9	XXX	XXX

REGISTERED CIVIL ENGINEER DATE

PLANS APPROVAL DATE

REGISTERED PROFESSIONAL ENGINEER No. Exp. CIVIL STATE OF CALIFORNIA

THE STATE OF CALIFORNIA OR ITS OFFICERS OR AGENTS SHALL NOT BE RESPONSIBLE FOR THE ACCURACY OR COMPLETENESS OF ELECTRONIC COPIES OF THIS PLAN SHEET.

SANBAG
1170 WEST 3RD STREET
2ND FLOOR
SAN BERNARDINO, CA 92410

CH2MHILL
2280 MARKET STREET
SUITE 200
RIVERSIDE, CA 92501

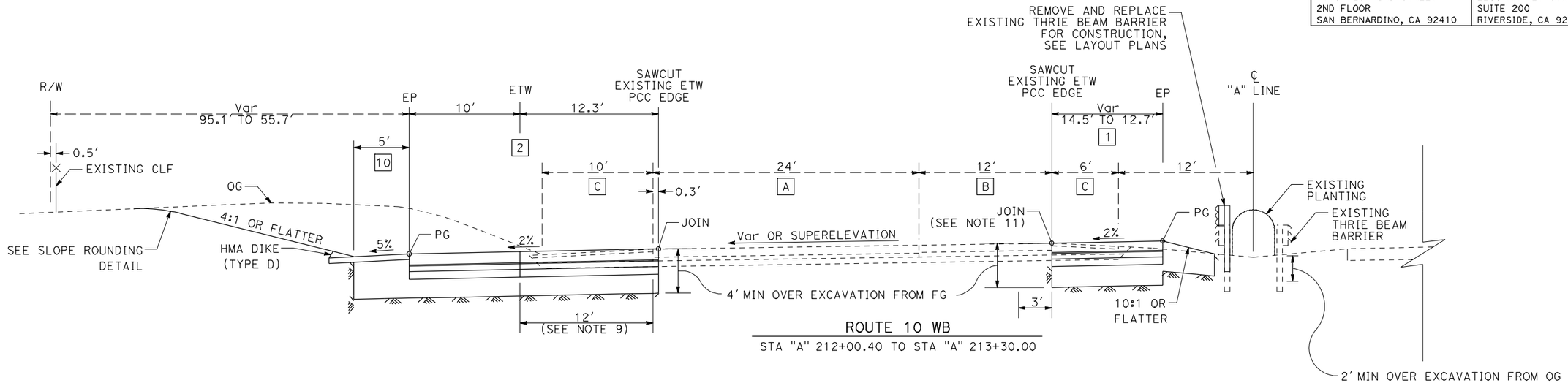

ROUTE 10 WB

STA "A" 212+00.40 TO STA "A" 213+30.00

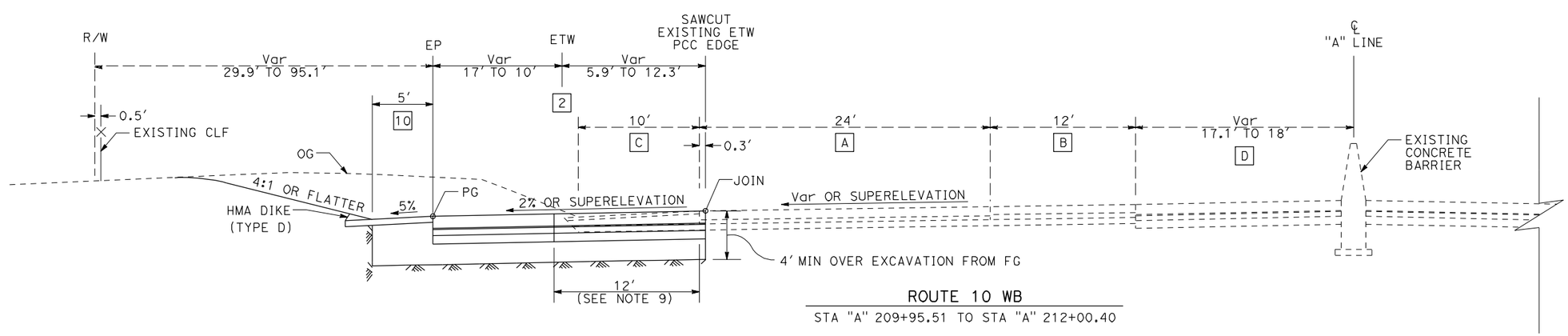

ROUTE 10 WB

STA "A" 209+95.51 TO STA "A" 212+00.40

TYPICAL CROSS SECTIONS

NO SCALE

X-10

REVISED BY	DATE REVISED

CALCULATED-DESIGNED BY | CHECKED BY

CONSULTANT FUNCTIONAL SUPERVISOR: MARK HAGER

STATE OF CALIFORNIA - DEPARTMENT OF TRANSPORTATION

Caltrans

LAST REVISION 00-00-00 | DATE PLOTTED => 15-JUL-2009

RELATIVE BORDER SCALE IS IN INCHES 0 1 2 3

USERNAME => atruong

CU 08220 | EA 0F1504

Dist	COUNTY	ROUTE	POST MILES TOTAL PROJECT	SHEET No.	TOTAL SHEETS
8	SBd	10	33.3/R36.9	XXX	XXX

REGISTERED CIVIL ENGINEER DATE

PLANS APPROVAL DATE

REGISTERED PROFESSIONAL ENGINEER No. Exp. CIVIL STATE OF CALIFORNIA

THE STATE OF CALIFORNIA OR ITS OFFICERS OR AGENTS SHALL NOT BE RESPONSIBLE FOR THE ACCURACY OR COMPLETENESS OF ELECTRONIC COPIES OF THIS PLAN SHEET.

SANBAG
1170 WEST 3RD STREET
2ND FLOOR
SAN BERNARDINO, CA 92410

CH2MHILL
2280 MARKET STREET
SUITE 200
RIVERSIDE, CA 92501

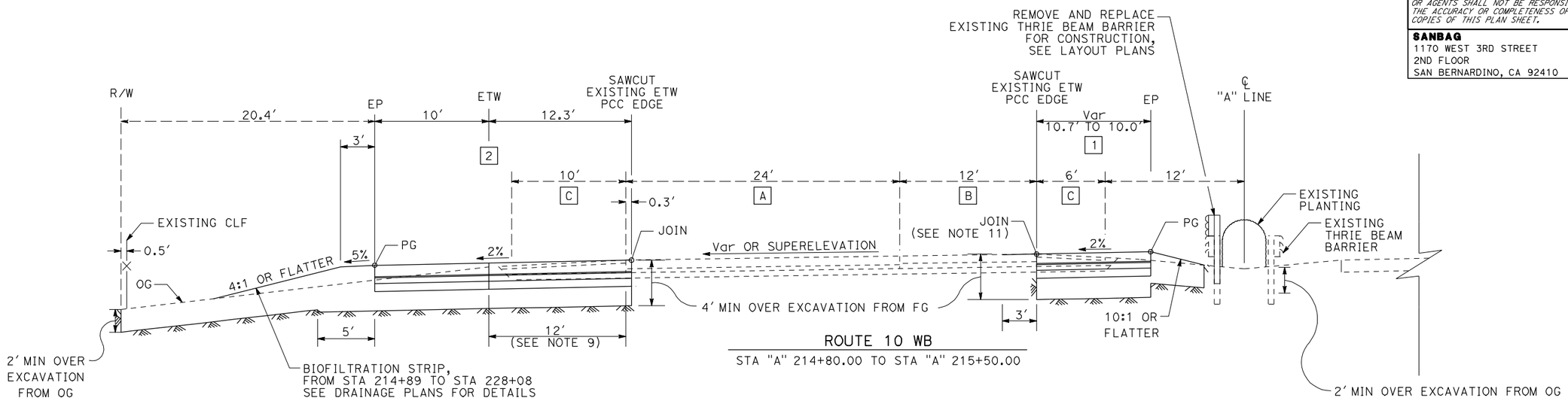

ROUTE 10 WB

STA "A" 214+80.00 TO STA "A" 215+50.00

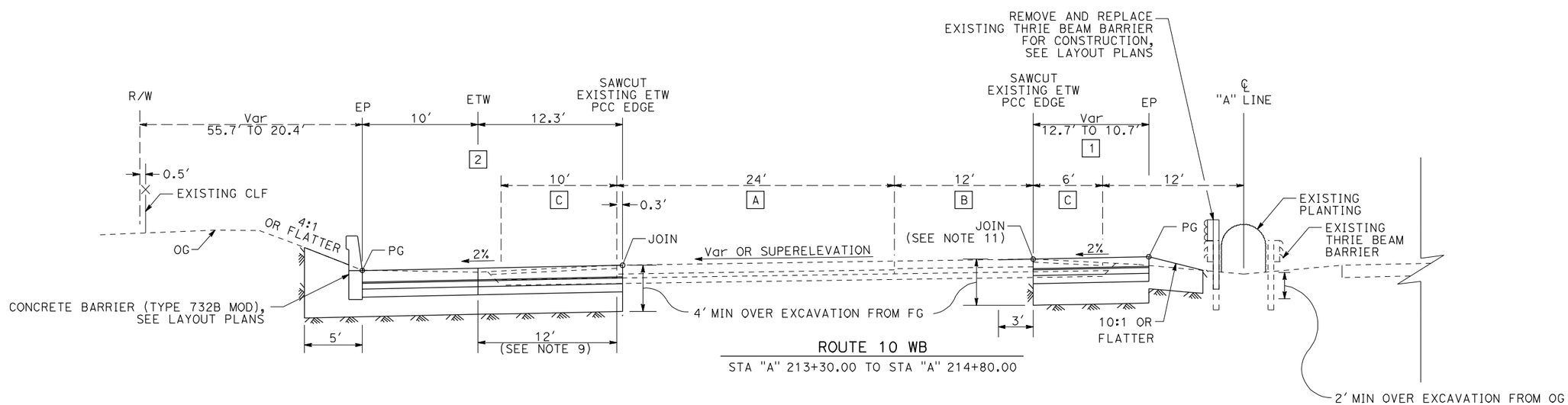

ROUTE 10 WB

STA "A" 213+30.00 TO STA "A" 214+80.00

TYPICAL CROSS SECTIONS

NO SCALE

X-11

REVISED BY	DATE REVISED

CALCULATED-DESIGNED BY	CHECKED BY

CONSULTANT FUNCTIONAL SUPERVISOR: MARK HAGER

STATE OF CALIFORNIA - DEPARTMENT OF TRANSPORTATION

Caltrans

LAST REVISION 00-00-00 | DATE PLOTTED => 15-JUL-2009 | TIME PLOTTED => 00:00

RELATIVE BORDER SCALE IS IN INCHES 0 1 2 3

USERNAME => atruong

CU 08220 | EA 0F1504

Dist	COUNTY	ROUTE	POST MILES TOTAL PROJECT	SHEET No.	TOTAL SHEETS
8	SBd	10	33.3/R36.9	XXX	XXX

REGISTERED CIVIL ENGINEER DATE

PLANS APPROVAL DATE

REGISTERED PROFESSIONAL ENGINEER No. Exp. CIVIL STATE OF CALIFORNIA

THE STATE OF CALIFORNIA OR ITS OFFICERS OR AGENTS SHALL NOT BE RESPONSIBLE FOR THE ACCURACY OR COMPLETENESS OF ELECTRONIC COPIES OF THIS PLAN SHEET.

SANBAG
1170 WEST 3RD STREET
2ND FLOOR
SAN BERNARDINO, CA 92410

CH2MHILL
2280 MARKET STREET
SUITE 200
RIVERSIDE, CA 92501

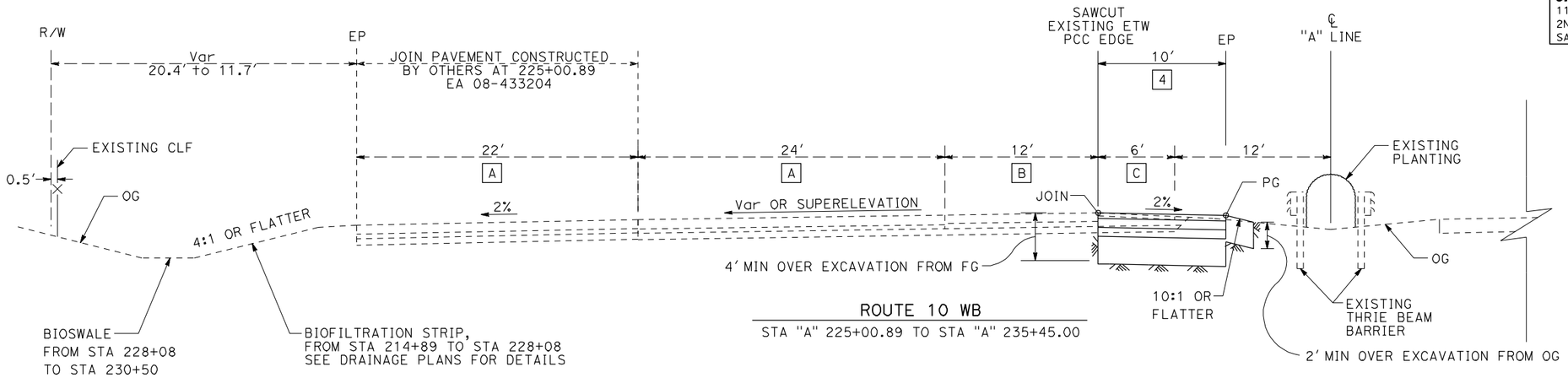

ROUTE 10 WB

STA "A" 225+00.89 TO STA "A" 235+45.00

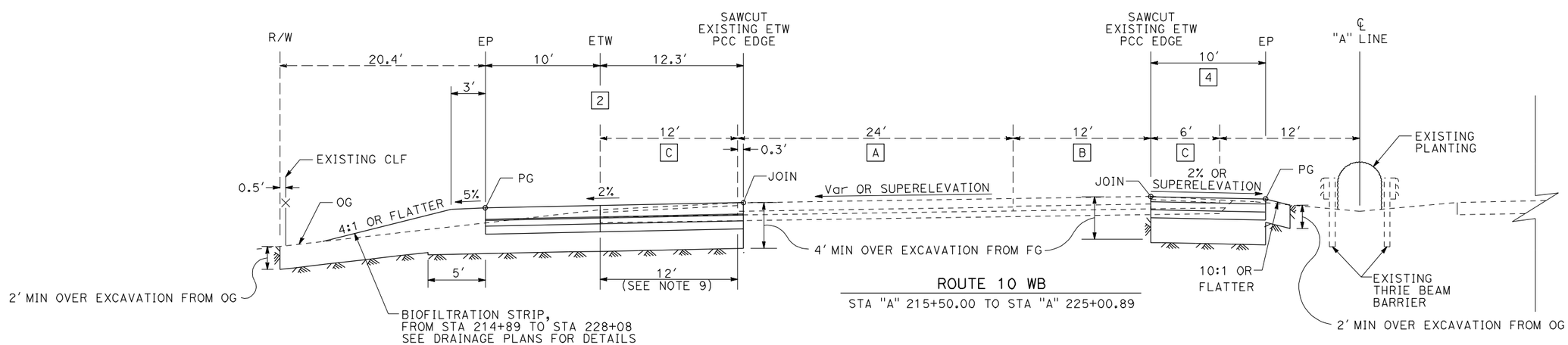

ROUTE 10 WB

STA "A" 215+50.00 TO STA "A" 225+00.89

TYPICAL CROSS SECTIONS

NO SCALE

X-12

REVISED BY | DATE REVISED

CALCULATED-DESIGNED BY | CHECKED BY

CONSULTANT FUNCTIONAL SUPERVISOR: MARK HAGER

STATE OF CALIFORNIA - DEPARTMENT OF TRANSPORTATION

Caltrans

LAST REVISION 00-00-00 | DATE PLOTTED => 15-JUL-2009

RELATIVE BORDER SCALE IS IN INCHES 0 1 2 3

USERNAME => atruong

CU 08220 | EA 0F1504

Dist	COUNTY	ROUTE	POST MILES TOTAL PROJECT	SHEET No.	TOTAL SHEETS
8	SBd	10	33.3/R36.9	XXX	XXX

REGISTERED CIVIL ENGINEER DATE

PLANS APPROVAL DATE

REGISTERED PROFESSIONAL ENGINEER No. Exp. CIVIL STATE OF CALIFORNIA

THE STATE OF CALIFORNIA OR ITS OFFICERS OR AGENTS SHALL NOT BE RESPONSIBLE FOR THE ACCURACY OR COMPLETENESS OF ELECTRONIC COPIES OF THIS PLAN SHEET.

SANBAG
1170 WEST 3RD STREET
2ND FLOOR
SAN BERNARDINO, CA 92410

CH2MHILL
2280 MARKET STREET
SUITE 200
RIVERSIDE, CA 92501

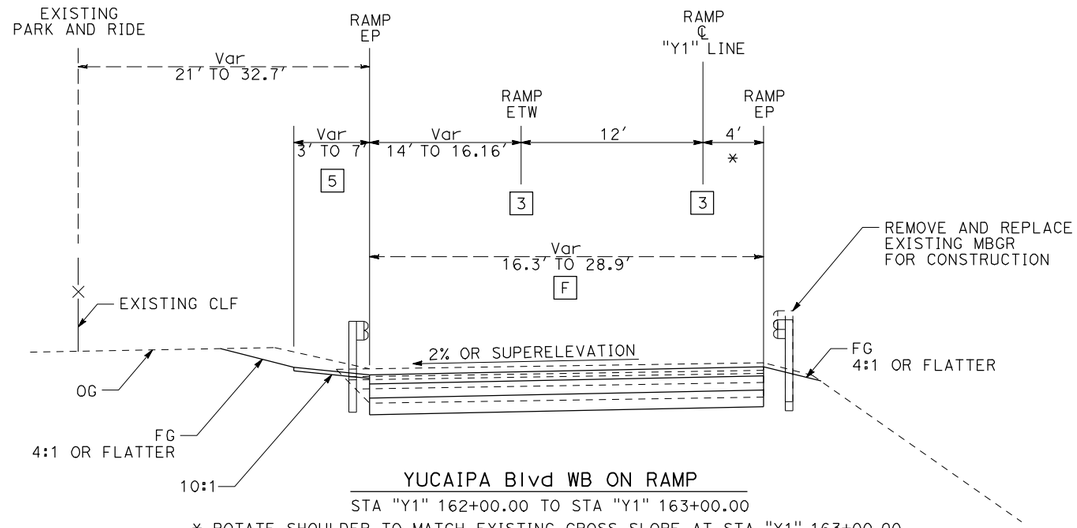

YUCAIPA Blvd WB ON RAMP

STA "Y1" 162+00.00 TO STA "Y1" 163+00.00

* ROTATE SHOULDER TO MATCH EXISTING CROSS SLOPE AT STA "Y1" 163+00.00, SEE SHEET C-3 FOR DETAILS

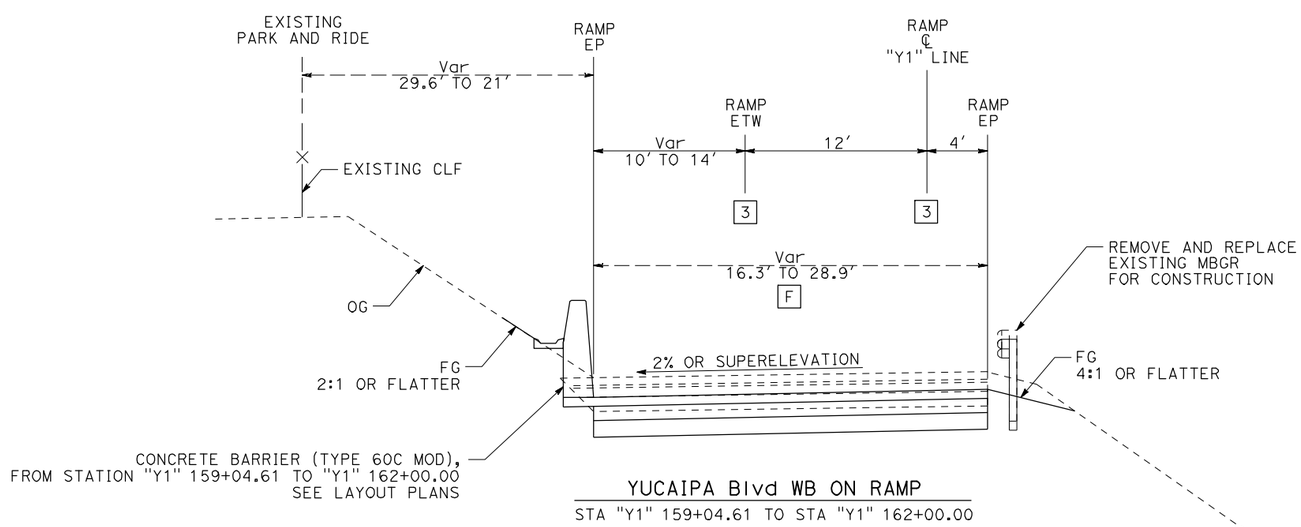

YUCAIPA Blvd WB ON RAMP

STA "Y1" 159+04.61 TO STA "Y1" 162+00.00

TYPICAL CROSS SECTIONS

NO SCALE

X-13

REVISED BY	DATE REVISED

CALCULATED-DESIGNED BY

CHECKED BY

CONSULTANT FUNCTIONAL SUPERVISOR

MARK HAGER

STATE OF CALIFORNIA - DEPARTMENT OF TRANSPORTATION

Caltrans

LAST REVISION 00-00-00 DATE PLOTTED => 15-JUL-2009 TIME PLOTTED => 00:00

RELATIVE BORDER SCALE IS IN INCHES 0 1 2 3

USERNAME => atruong

CU 08220

EA 0F1504

Dist	COUNTY	ROUTE	POST MILES TOTAL PROJECT	SHEET No.	TOTAL SHEETS
8	SBd	10	33.3/R36.9	XXX	XXX

REGISTERED CIVIL ENGINEER DATE

PLANS APPROVAL DATE

REGISTERED PROFESSIONAL ENGINEER
No.
Exp.
CIVIL
STATE OF CALIFORNIA

THE STATE OF CALIFORNIA OR ITS OFFICERS OR AGENTS SHALL NOT BE RESPONSIBLE FOR THE ACCURACY OR COMPLETENESS OF ELECTRONIC COPIES OF THIS PLAN SHEET.

SANBAG
1170 WEST 3RD STREET
2ND FLOOR
SAN BERNARDINO, CA 92410

CH2MHILL
2280 MARKET STREET
SUITE 200
RIVERSIDE, CA 92501

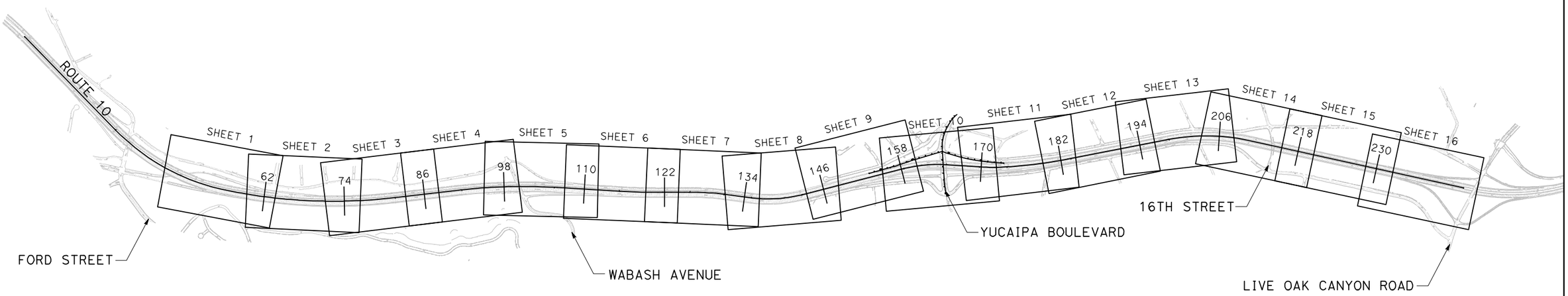

KEY MAP AND LINE INDEX

NO SCALE

K-1

REVISED BY	DATE REVISED

CALCULATED-DESIGNED BY
CHECKED BY

CONSULTANT FUNCTIONAL SUPERVISOR
MARK HAGER

STATE OF CALIFORNIA - DEPARTMENT OF TRANSPORTATION
Caltrans

LAST REVISION 00-00-00 DATE PLOTTED => 15-JUL-2009

RELATIVE BORDER SCALE IS IN INCHES 0 1 2 3

USERNAME => dtruong

CU 08220

EA 0F1504

Dist	COUNTY	ROUTE	POST MILES TOTAL PROJECT	SHEET No.	TOTAL SHEETS
8	SBd	10	33.3/R36.9	XXX	XXX

REGISTERED CIVIL ENGINEER DATE

PLANS APPROVAL DATE

REGISTERED PROFESSIONAL ENGINEER No. Exp. CIVIL STATE OF CALIFORNIA

THE STATE OF CALIFORNIA OR ITS OFFICERS OR AGENTS SHALL NOT BE RESPONSIBLE FOR THE ACCURACY OR COMPLETENESS OF ELECTRONIC COPIES OF THIS PLAN SHEET.

SANBAG
1170 WEST 3RD STREET
2ND FLOOR
SAN BERNARDINO, CA 92410

CH2MHILL
2280 MARKET STREET
SUITE 200
RIVERSIDE, CA 92501

NOTE:

1. FOR COMPLETE R/W AND ACCURATE ACCESS DATA, SEE R/W RECORD MAPS AT DISTRICT OFFICE.
2. THE BEARINGS AND DISTANCES SHOWN ON THESE PLANS ARE BASED ON THE CALIFORNIA COORDINATE SYSTEM, ZONE 5, PLANE 10.

CURVE DATA

No.	R	Δ	T	L
1	3199.23′	33°52′55″	974.50′	1891.87′
2	7943.34′	18°26′29″	1289.48′	2556.66′

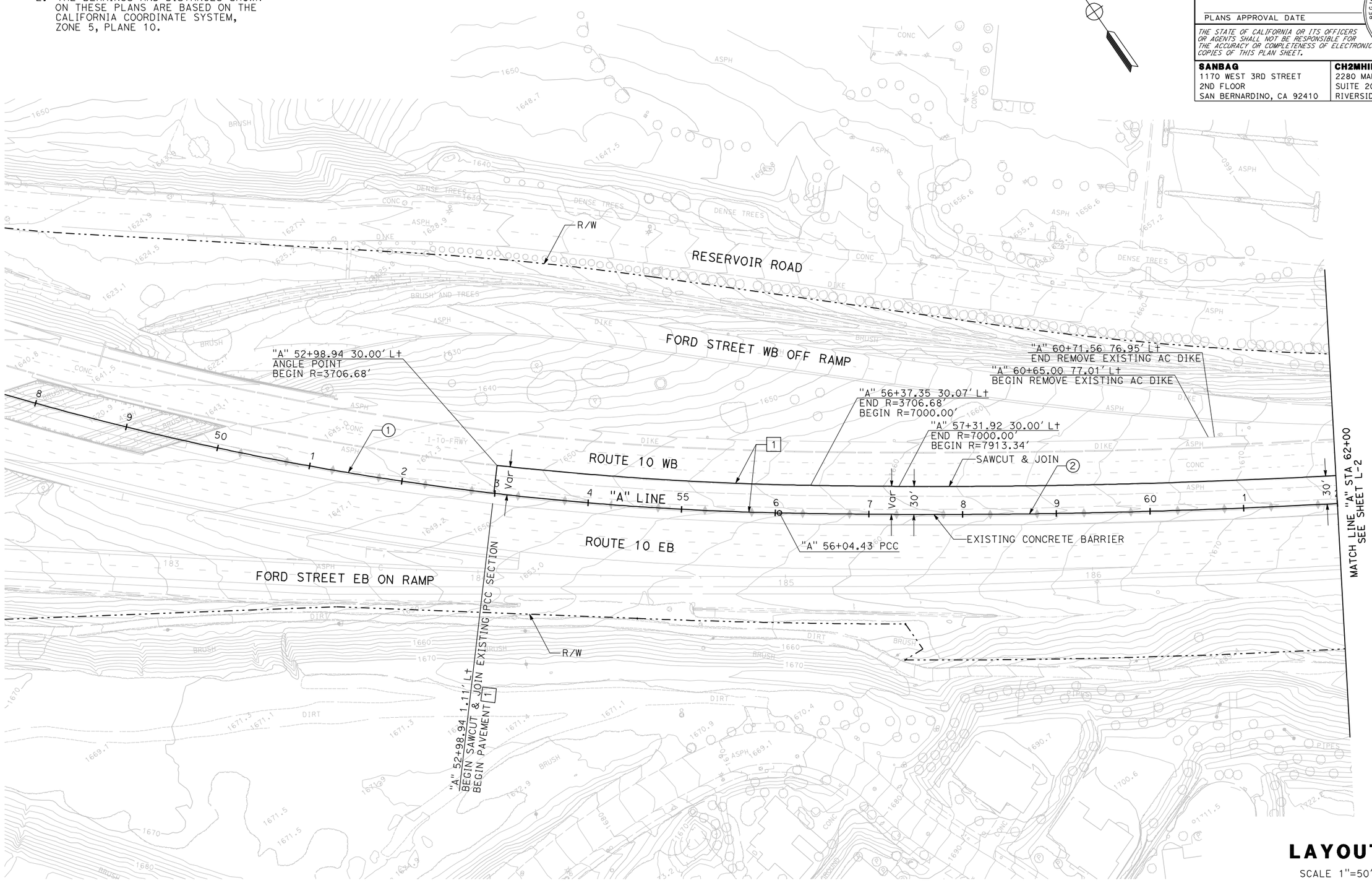

LAYOUT

SCALE 1"=50′

L-1

REVISED BY	DATE REVISED

CALCULATED-DESIGNED BY

CHECKED BY

CONSULTANT FUNCTIONAL SUPERVISOR

MARK HAGER

STATE OF CALIFORNIA - DEPARTMENT OF TRANSPORTATION

Caltrans

LAST REVISION 00-00-00 DATE PLOTTED => 15-JUL-2009

RELATIVE BORDER SCALE IS IN INCHES 0 1 2 3

USERNAME => atruong

CU 08220

EA 0F1504

NOTE:

1. FOR COMPLETE R/W AND ACCURATE ACCESS DATA, SEE R/W RECORD MAPS AT DISTRICT OFFICE.

CURVE DATA

No.	R	Δ	T	L
2	7943.34′	18°26′29″	1289.48′	2556.66′

Dist	COUNTY	ROUTE	POST MILES TOTAL PROJECT	SHEET No.	TOTAL SHEETS
8	SBd	10	33.3/R36.9	XXX	XXX

REGISTERED CIVIL ENGINEER DATE

PLANS APPROVAL DATE

REGISTERED PROFESSIONAL ENGINEER No. Exp. CIVIL STATE OF CALIFORNIA

THE STATE OF CALIFORNIA OR ITS OFFICERS OR AGENTS SHALL NOT BE RESPONSIBLE FOR THE ACCURACY OR COMPLETENESS OF ELECTRONIC COPIES OF THIS PLAN SHEET.

SANBAG
1170 WEST 3RD STREET
2ND FLOOR
SAN BERNARDINO, CA 92410

CH2MHILL
2280 MARKET STREET
SUITE 200
RIVERSIDE, CA 92501

LAYOUT

SCALE 1"=50′

L-2

STATE OF CALIFORNIA - DEPARTMENT OF TRANSPORTATION

Caltrans

CONSULTANT FUNCTIONAL SUPERVISOR: MARK HAGER

CALCULATED-DESIGNED BY

CHECKED BY

REVISED BY

DATE REVISED

LAST REVISION

DATE PLOTTED => 15-JUL-2009

RELATIVE BORDER SCALE IS IN INCHES 0 1 2 3

USERNAME => dtruong

CU 08220

EA 0F1504

NOTE:

1. FOR COMPLETE R/W AND ACCURATE ACCESS DATA, SEE R/W RECORD MAPS AT DISTRICT OFFICE.

CURVE DATA

No.	R	Δ	T	L
2	7943.34′	18°26′29″	1289.48′	2556.66′

Dist	COUNTY	ROUTE	POST MILES TOTAL PROJECT	SHEET No.	TOTAL SHEETS
8	SBd	10	33.3/R36.9	XXX	XXX

REGISTERED CIVIL ENGINEER DATE

PLANS APPROVAL DATE

REGISTERED PROFESSIONAL ENGINEER No. Exp. CIVIL STATE OF CALIFORNIA

THE STATE OF CALIFORNIA OR ITS OFFICERS OR AGENTS SHALL NOT BE RESPONSIBLE FOR THE ACCURACY OR COMPLETENESS OF ELECTRONIC COPIES OF THIS PLAN SHEET.

SANBAG
1170 WEST 3RD STREET
2ND FLOOR
SAN BERNARDINO, CA 92410

CH2MHILL
2280 MARKET STREET
SUITE 200
RIVERSIDE, CA 92501

LAYOUT

SCALE 1″=50′

L-3

STATE OF CALIFORNIA - DEPARTMENT OF TRANSPORTATION

Caltrans

CONSULTANT FUNCTIONAL SUPERVISOR: MARK HAGER

CALCULATED-DESIGNED BY

CHECKED BY

REVISED BY

DATE REVISED

LAST REVISION

DATE PLOTTED => 15-JUL-2009

RELATIVE BORDER SCALE IS IN INCHES 0 1 2 3

USERNAME => atruong

CU 08220

EA 0F1504

NOTE:

1. FOR COMPLETE R/W AND ACCURATE ACCESS DATA, SEE R/W RECORD MAPS AT DISTRICT OFFICE.

CURVE DATA

No.	R	Δ	T	L
3	7999.32′	09°57′59″	697.48′	1391.44′

Dist	COUNTY	ROUTE	POST MILES TOTAL PROJECT	SHEET No.	TOTAL SHEETS
8	SBd	10	33.3/R36.9	XXX	XXX

REGISTERED CIVIL ENGINEER DATE

PLANS APPROVAL DATE

REGISTERED PROFESSIONAL ENGINEER No. Exp. CIVIL STATE OF CALIFORNIA

THE STATE OF CALIFORNIA OR ITS OFFICERS OR AGENTS SHALL NOT BE RESPONSIBLE FOR THE ACCURACY OR COMPLETENESS OF ELECTRONIC COPIES OF THIS PLAN SHEET.

SANBAG
1170 WEST 3RD STREET
2ND FLOOR
SAN BERNARDINO, CA 92410

CH2MHILL
2280 MARKET STREET
SUITE 200
RIVERSIDE, CA 92501

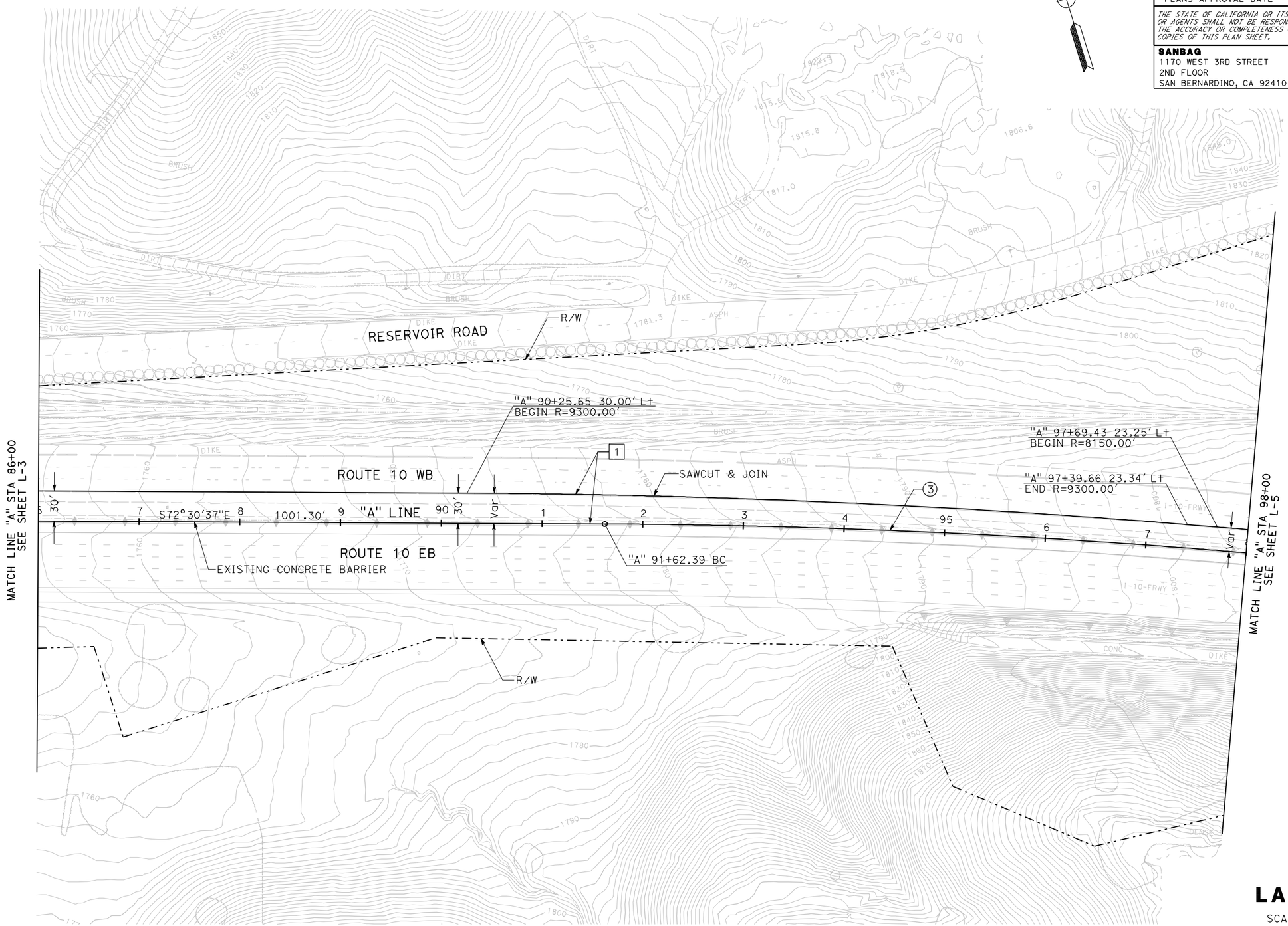

LAYOUT

SCALE 1"=50′

L-4

REVISED BY	DATE REVISED

CALCULATED-DESIGNED BY

CHECKED BY

CONSULTANT FUNCTIONAL SUPERVISOR: MARK HAGER

STATE OF CALIFORNIA - DEPARTMENT OF TRANSPORTATION

Caltrans

LAST REVISION | DATE PLOTTED => 15-JUL-2009

RELATIVE BORDER SCALE IS IN INCHES 0 1 2 3

USERNAME => atruong

CU 08220

EA 0F1504

Dist	COUNTY	ROUTE	POST MILES TOTAL PROJECT	SHEET No.	TOTAL SHEETS
8	SBd	10	33.3/R36.9	XXX	XXX

REGISTERED CIVIL ENGINEER DATE

PLANS APPROVAL DATE

REGISTERED PROFESSIONAL ENGINEER No. Exp. CIVIL STATE OF CALIFORNIA

THE STATE OF CALIFORNIA OR ITS OFFICERS OR AGENTS SHALL NOT BE RESPONSIBLE FOR THE ACCURACY OR COMPLETENESS OF ELECTRONIC COPIES OF THIS PLAN SHEET.

SANBAG
1170 WEST 3RD STREET
2ND FLOOR
SAN BERNARDINO, CA 92410

CH2MHILL
2280 MARKET STREET
SUITE 200
RIVERSIDE, CA 92501

NOTE:

1. FOR COMPLETE R/W AND ACCURATE ACCESS DATA, SEE R/W RECORD MAPS AT DISTRICT OFFICE.

CURVE DATA

No.	R	Δ	T	L
3	7999.32′	09°57′59″	697.48′	1391.44′

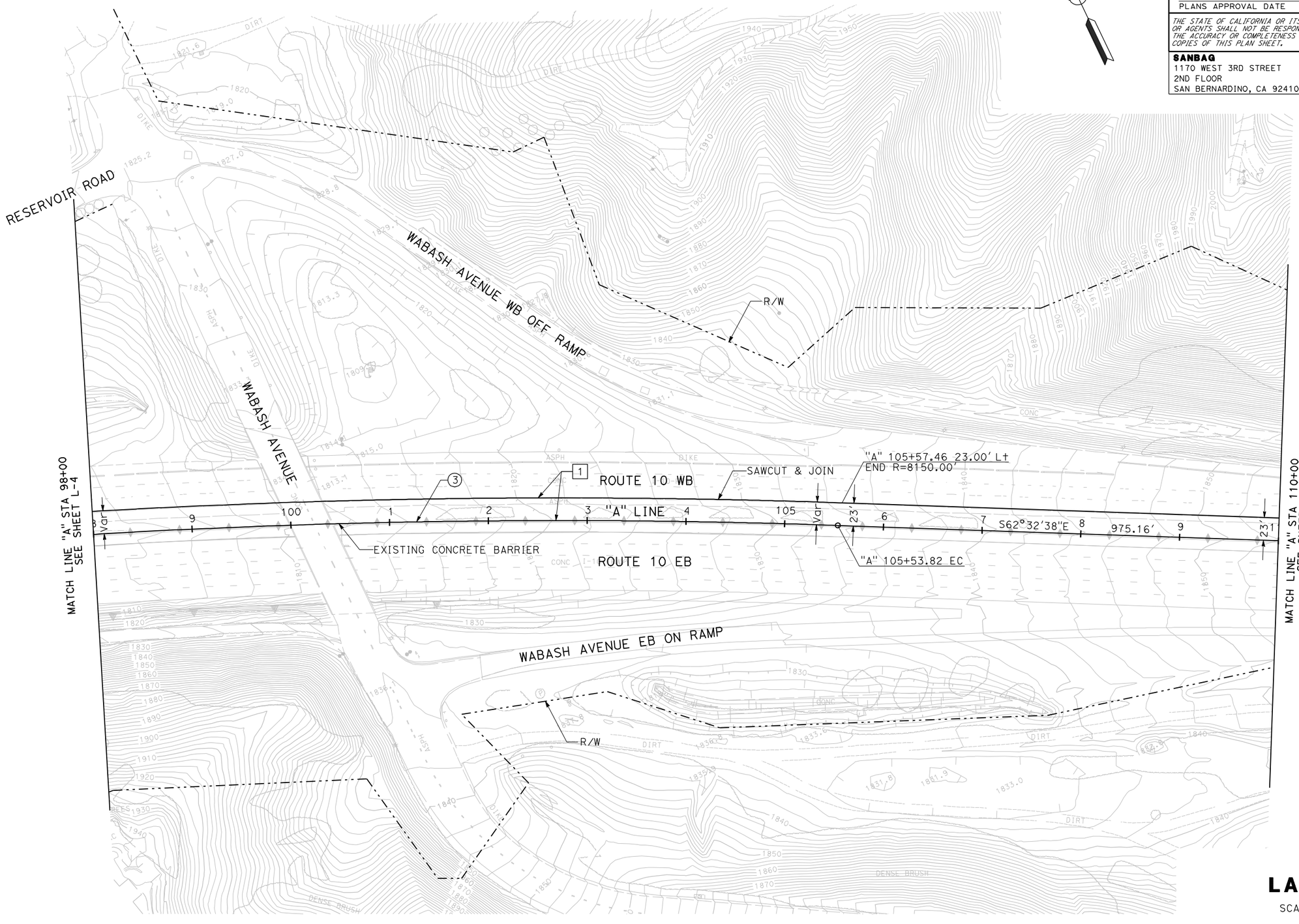

LAYOUT

SCALE 1"=50′

L-5

REVISED BY	DATE REVISED

CALCULATED-DESIGNED BY	CHECKED BY

CONSULTANT FUNCTIONAL SUPERVISOR: MARK HAGER

STATE OF CALIFORNIA - DEPARTMENT OF TRANSPORTATION

Caltrans

LAST REVISION 00-00-00 | DATE PLOTTED => 15-JUL-2009 | TIME PLOTTED => 00:00

RELATIVE BORDER SCALE IN INCHES 0 1 2 3

USERNAME => atruong

CU 08220

EA 0F1504

Dist	COUNTY	ROUTE	POST MILES TOTAL PROJECT	SHEET No.	TOTAL SHEETS
8	SBd	10	33.3/R36.9	XXX	XXX

REGISTERED CIVIL ENGINEER DATE

PLANS APPROVAL DATE

REGISTERED PROFESSIONAL ENGINEER No. Exp. CIVIL STATE OF CALIFORNIA

THE STATE OF CALIFORNIA OR ITS OFFICERS OR AGENTS SHALL NOT BE RESPONSIBLE FOR THE ACCURACY OR COMPLETENESS OF ELECTRONIC COPIES OF THIS PLAN SHEET.

SANBAG
1170 WEST 3RD STREET
2ND FLOOR
SAN BERNARDINO, CA 92410

CH2MHILL
2280 MARKET STREET
SUITE 200
RIVERSIDE, CA 92501

NOTE:

1. FOR COMPLETE R/W AND ACCURATE ACCESS DATA, SEE R/W RECORD MAPS AT DISTRICT OFFICE.

CURVE DATA

No.	R	Δ	T	L
4	9999.15′	03°40′41″	321.05′	641.88′

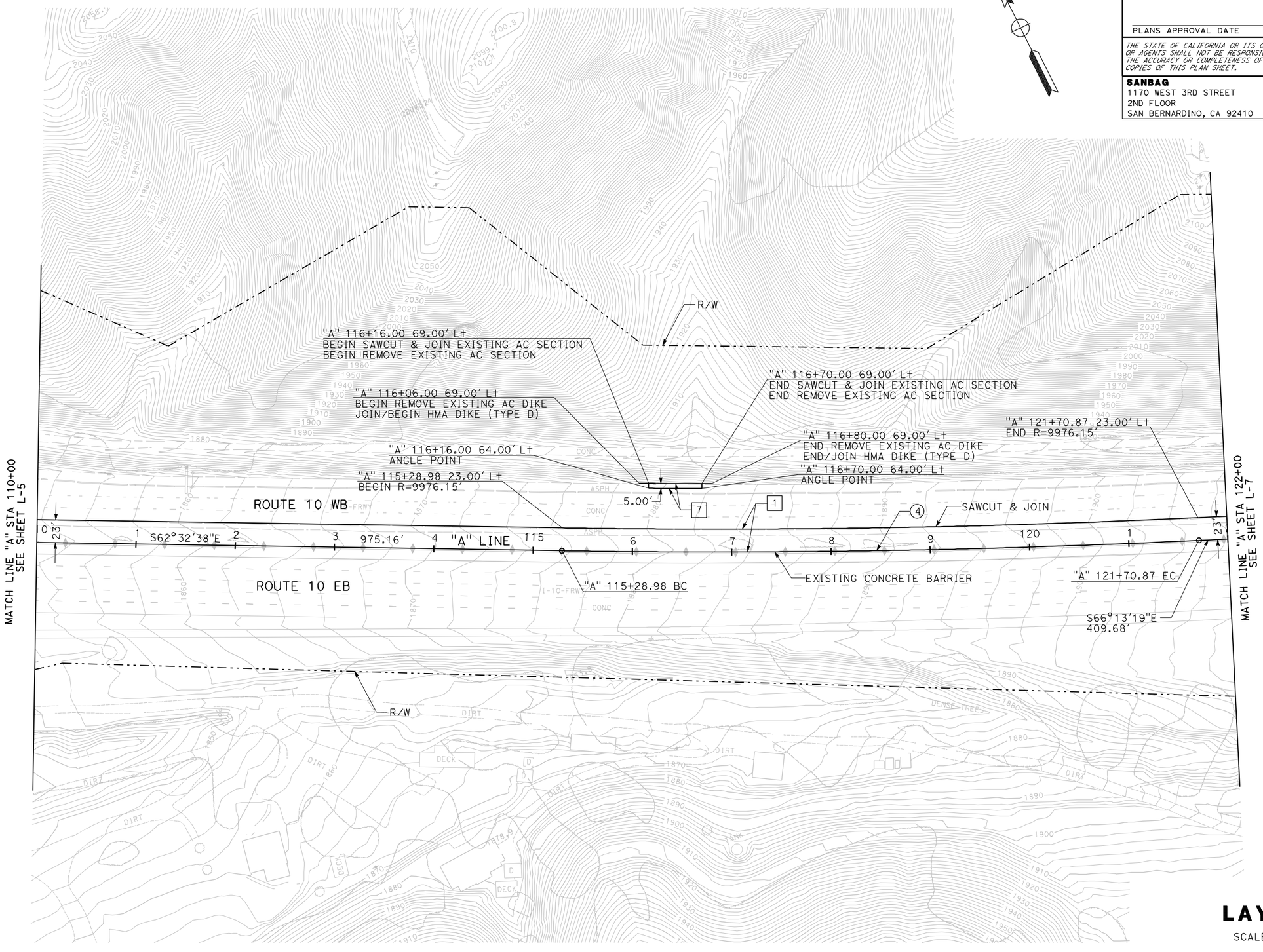

LAYOUT

SCALE 1″=50′

L-6

REVISED BY	DATE REVISED

CALCULATED-DESIGNED BY	CHECKED BY

CONSULTANT FUNCTIONAL SUPERVISOR: MARK HAGER

STATE OF CALIFORNIA - DEPARTMENT OF TRANSPORTATION

Caltrans

RELATIVE BORDER SCALE IS IN INCHES 0 1 2 3

USERNAME => atruong

CU 08220

EA 0F1504

LAST REVISION 00-00-00 DATE PLOTTED => 15-JUL-2009

Dist	COUNTY	ROUTE	POST MILES TOTAL PROJECT	SHEET No.	TOTAL SHEETS
8	SBd	10	33.3/R36.9	XXX	XXX

REGISTERED CIVIL ENGINEER DATE

PLANS APPROVAL DATE

REGISTERED PROFESSIONAL ENGINEER No. Exp. CIVIL STATE OF CALIFORNIA

THE STATE OF CALIFORNIA OR ITS OFFICERS OR AGENTS SHALL NOT BE RESPONSIBLE FOR THE ACCURACY OR COMPLETENESS OF ELECTRONIC COPIES OF THIS PLAN SHEET.

SANBAG
1170 WEST 3RD STREET
2ND FLOOR
SAN BERNARDINO, CA 92410

CH2MHILL
2280 MARKET STREET
SUITE 200
RIVERSIDE, CA 92501

NOTE:

1. FOR COMPLETE R/W AND ACCURATE ACCESS DATA, SEE R/W RECORD MAPS AT DISTRICT OFFICE.

CURVE DATA

No.	R	Δ	T	L
5	3799.67′	07°44′39″	257.18′	513.57′

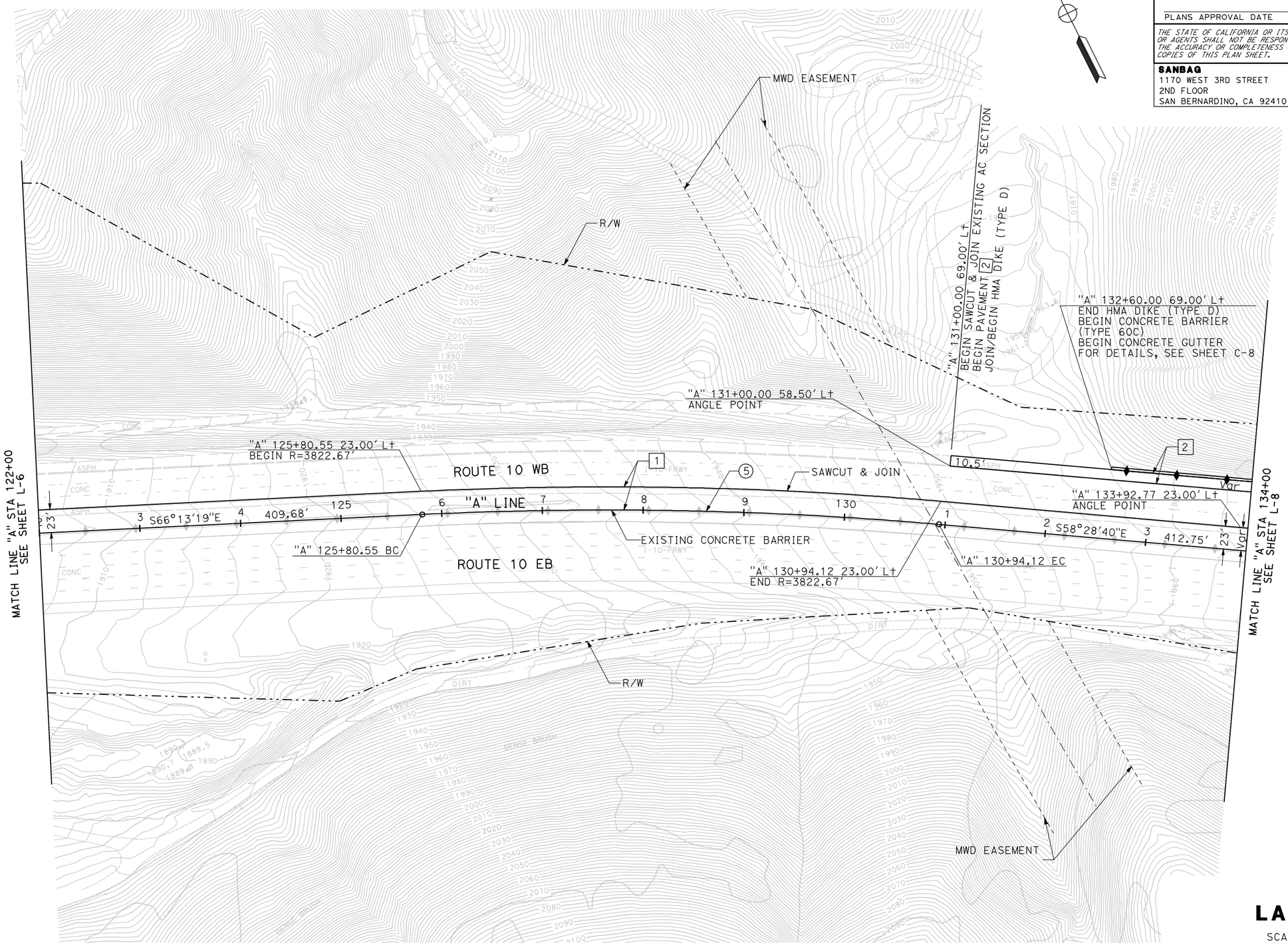

LAYOUT

SCALE 1″=50′

L-7

REVISED BY	DATE REVISED

CALCULATED-DESIGNED BY

CHECKED BY

CONSULTANT FUNCTIONAL SUPERVISOR

MARK HAGER

STATE OF CALIFORNIA - DEPARTMENT OF TRANSPORTATION

Caltrans

LAST REVISION 00-00-00 DATE PLOTTED => 15-JUL-2009

RELATIVE BORDER SCALE IS IN INCHES 0 1 2 3

USERNAME => atruong

CU 08220

EA 0F1504

Dist	COUNTY	ROUTE	POST MILES TOTAL PROJECT	SHEET No.	TOTAL SHEETS
8	SBd	10	33.3/R36.9	XXX	XXX

REGISTERED CIVIL ENGINEER DATE

PLANS APPROVAL DATE

REGISTERED PROFESSIONAL ENGINEER No. Exp. CIVIL STATE OF CALIFORNIA

THE STATE OF CALIFORNIA OR ITS OFFICERS OR AGENTS SHALL NOT BE RESPONSIBLE FOR THE ACCURACY OR COMPLETENESS OF ELECTRONIC COPIES OF THIS PLAN SHEET.

SANBAG
1170 WEST 3RD STREET
2ND FLOOR
SAN BERNARDINO, CA 92410

CH2MHILL
2280 MARKET STREET
SUITE 200
RIVERSIDE, CA 92501

NOTE:

1. FOR COMPLETE R/W AND ACCURATE ACCESS DATA, SEE R/W RECORD MAPS AT DISTRICT OFFICE.

CURVE DATA

No.	R	Δ	T	L
6	1999.83′	21°49′42″	385.62′	761.88′

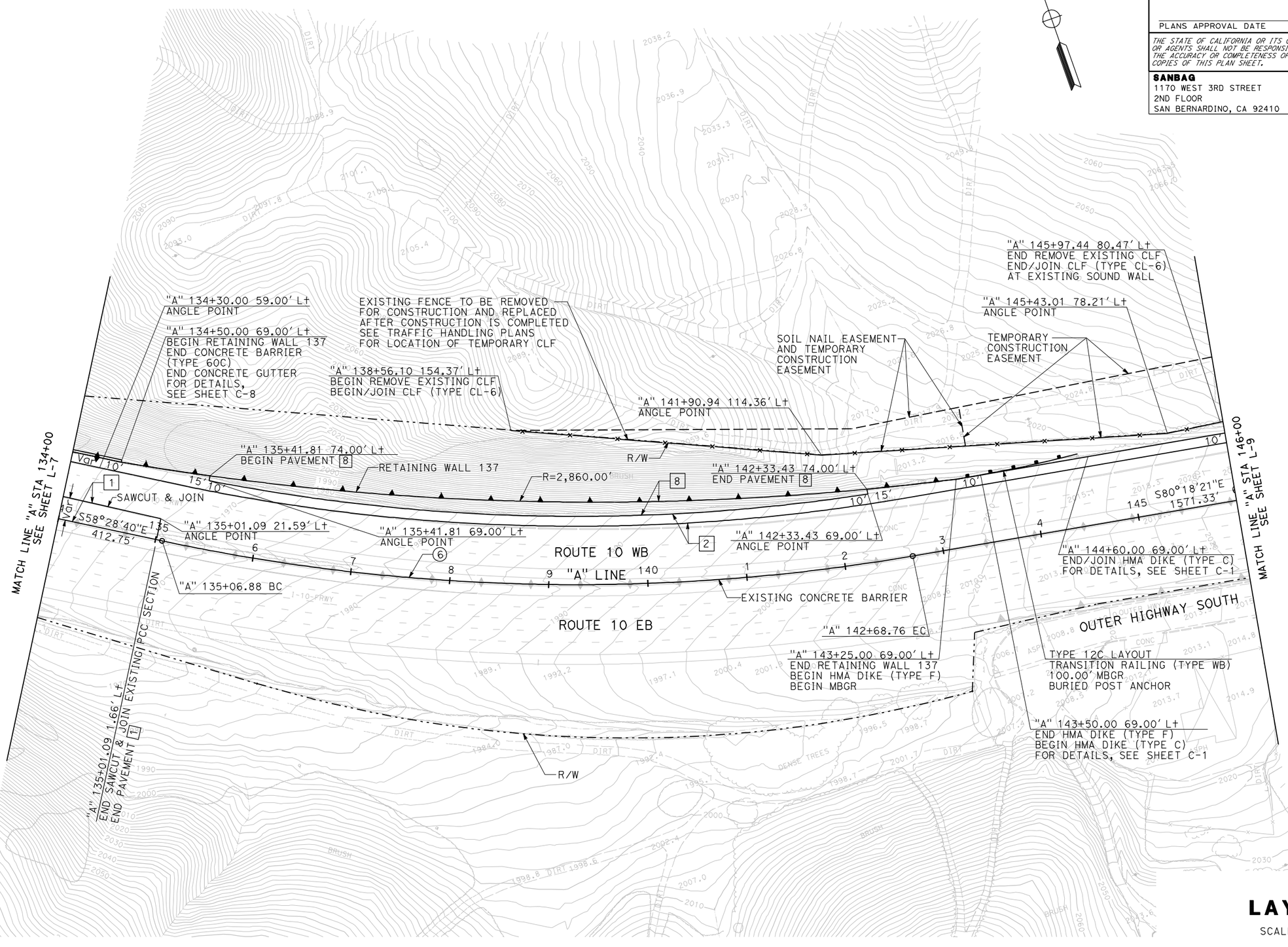

LAYOUT

SCALE 1"=50′

L-8

REVISED BY	DATE REVISED

CALCULATED-DESIGNED BY

CHECKED BY

CONSULTANT FUNCTIONAL SUPERVISOR

MARK HAGER

STATE OF CALIFORNIA - DEPARTMENT OF TRANSPORTATION

Caltrans

LAST REVISION DATE PLOTTED => 15-JUL-2009

RELATIVE BORDER SCALE IS IN INCHES 0 1 2 3

USERNAME => atruong

CU 08220

EA 0F1504

Dist	COUNTY	ROUTE	POST MILES TOTAL PROJECT	SHEET No.	TOTAL SHEETS
8	SBd	10	33.3/R36.9	XXX	XXX

REGISTERED CIVIL ENGINEER DATE

PLANS APPROVAL DATE

REGISTERED PROFESSIONAL ENGINEER No. Exp. CIVIL STATE OF CALIFORNIA

THE STATE OF CALIFORNIA OR ITS OFFICERS OR AGENTS SHALL NOT BE RESPONSIBLE FOR THE ACCURACY OR COMPLETENESS OF ELECTRONIC COPIES OF THIS PLAN SHEET.

SANBAG
1170 WEST 3RD STREET
2ND FLOOR
SAN BERNARDINO, CA 92410

CH2MHILL
2280 MARKET STREET
SUITE 200
RIVERSIDE, CA 92501

NOTE:

1. FOR COMPLETE R/W AND ACCURATE ACCESS DATA, SEE R/W RECORD MAPS AT DISTRICT OFFICE.

LEGEND:

VEGETATION CONTROL (MINOR CONCRETE)

CURVE DATA

No.	R	Δ	T	L
11	3280.83′	4°44′13″	135.70′	271.24′

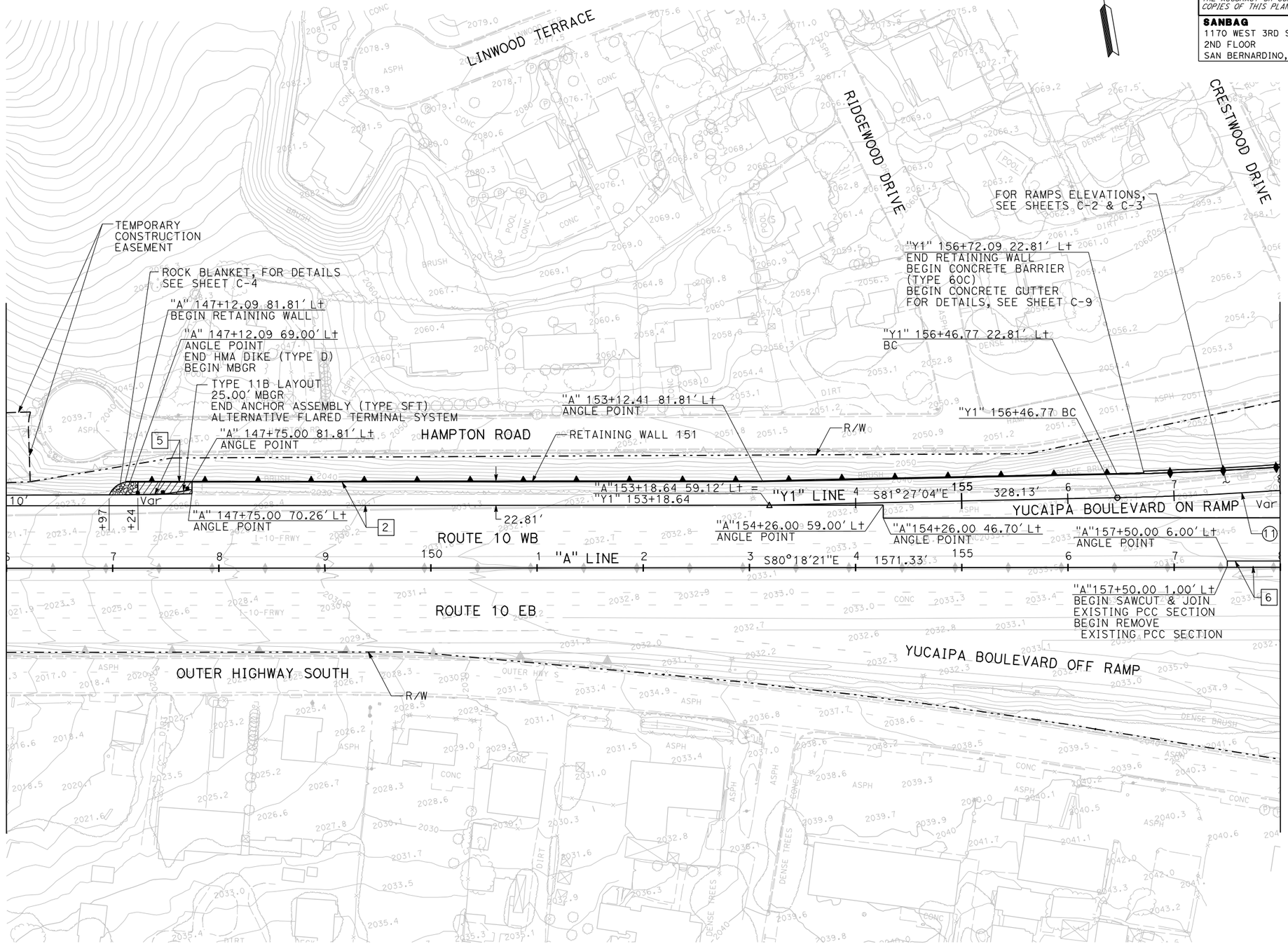

LAYOUT

SCALE 1"=50′

L-9

REVISED BY	DATE REVISED

CALCULATED-DESIGNED BY	CHECKED BY

CONSULTANT FUNCTIONAL SUPERVISOR: MARK HAGER

STATE OF CALIFORNIA - DEPARTMENT OF TRANSPORTATION

Caltrans

RELATIVE BORDER SCALE IS IN INCHES 0 1 2 3

USERNAME => atruong

CU 08220

EA 0F1504

LAST REVISION 00-00-00 DATE PLOTTED => 15-JUL-2009

Dist	COUNTY	ROUTE	POST MILES TOTAL PROJECT	SHEET No.	TOTAL SHEETS
8	SBd	10	33.3/R36.9	XXX	XXX

REGISTERED CIVIL ENGINEER DATE

PLANS APPROVAL DATE

REGISTERED PROFESSIONAL ENGINEER No. Exp. CIVIL STATE OF CALIFORNIA

THE STATE OF CALIFORNIA OR ITS OFFICERS OR AGENTS SHALL NOT BE RESPONSIBLE FOR THE ACCURACY OR COMPLETENESS OF ELECTRONIC COPIES OF THIS PLAN SHEET.

SANBAG
1170 WEST 3RD STREET
2ND FLOOR
SAN BERNARDINO, CA 92410

CH2MHILL
2280 MARKET STREET
SUITE 200
RIVERSIDE, CA 92501

NOTE:

1. FOR COMPLETE R/W AND ACCURATE ACCESS DATA, SEE R/W RECORD MAPS AT DISTRICT OFFICE.

CURVE DATA

No.	R	Δ	T	L
7	1999.83′	18°16′06″	321.55′	637.63′
8	2999.55′	07°55′46″	207.89′	415.12′
11	3280.83′	04°44′13″	135.70′	271.24′
12	1639.63′	03°52′52″	55.56′	111.07′
13	2999.99′	17°53′51″	135.70′	937.10′
14	1000.00′	07°44′27″	67.65′	135.10′
15	650.00′	51°42′57″	315.03	586.70

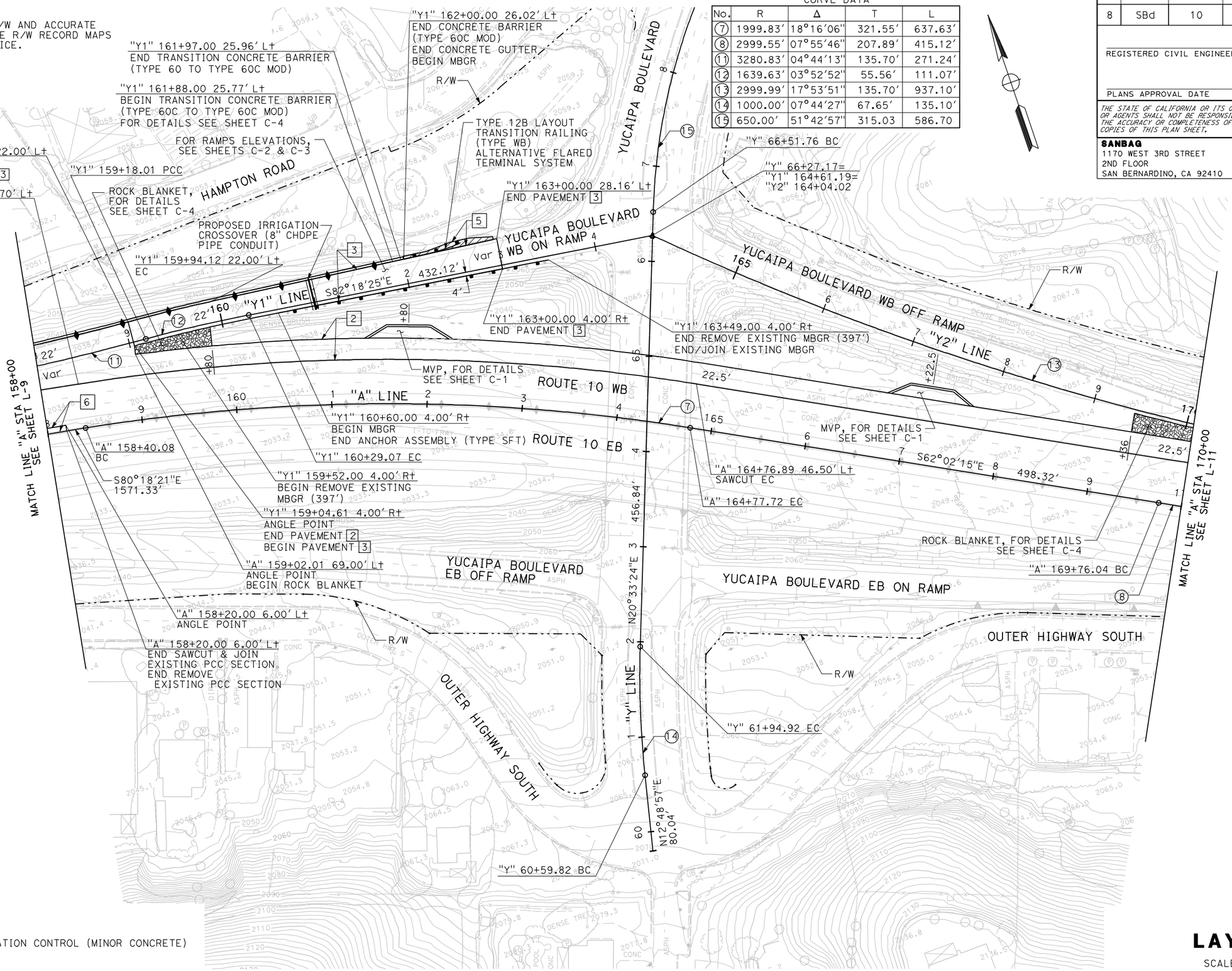

LEGEND:

VEGETATION CONTROL (MINOR CONCRETE)

LAYOUT

SCALE 1"=50′

L-10

STATE OF CALIFORNIA - DEPARTMENT OF TRANSPORTATION

Caltrans

CONSULTANT FUNCTIONAL SUPERVISOR: MARK HAGER

CALCULATED-DESIGNED BY | CHECKED BY

REVISED BY | DATE REVISED

LAST REVISION | DATE PLOTTED => 15-JUL-2009

RELATIVE BORDER SCALE IS IN INCHES 0 1 2 3

USERNAME => dtruong

CU 08220

EA 0F1504

Dist	COUNTY	ROUTE	POST MILES TOTAL PROJECT	SHEET No.	TOTAL SHEETS
8	SBd	10	33.3/R36.9	XXX	XXX

REGISTERED CIVIL ENGINEER DATE

PLANS APPROVAL DATE

REGISTERED PROFESSIONAL ENGINEER No. Exp. CIVIL STATE OF CALIFORNIA

THE STATE OF CALIFORNIA OR ITS OFFICERS OR AGENTS SHALL NOT BE RESPONSIBLE FOR THE ACCURACY OR COMPLETENESS OF ELECTRONIC COPIES OF THIS PLAN SHEET.

SANBAG
1170 WEST 3RD STREET
2ND FLOOR
SAN BERNARDINO, CA 92410

CH2MHILL
2280 MARKET STREET
SUITE 200
RIVERSIDE, CA 92501

NOTE:

1. FOR COMPLETE R/W AND ACCURATE ACCESS DATA, SEE R/W RECORD MAPS AT DISTRICT OFFICE.

LEGEND:

VEGETATION CONTROL (MINOR CONCRETE)

CURVE DATA

No.	R	Δ	T	L
8	2999.55′	07°55′46″	207.89′	415.12′
9	7963.42′	06°56′10″	482.60′	964.02′
13	2999.99′	17°53′51″	135.70′	937.10′

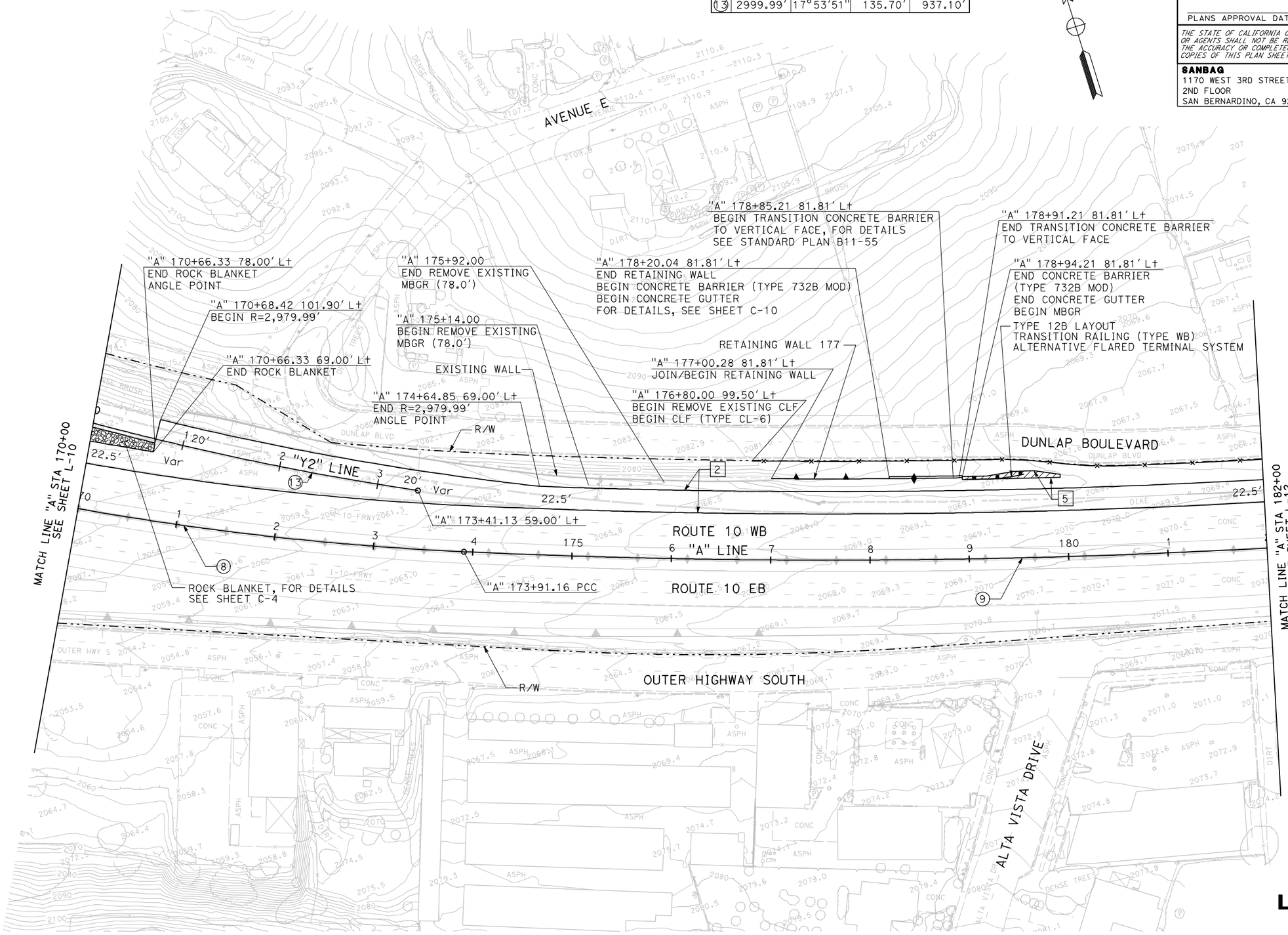

LAYOUT

SCALE 1"=50′

L-11

REVISED BY	DATE REVISED

CALCULATED-DESIGNED BY

CHECKED BY

CONSULTANT FUNCTIONAL SUPERVISOR: MARK HAGER

STATE OF CALIFORNIA - DEPARTMENT OF TRANSPORTATION

Caltrans

RELATIVE BORDER SCALE IS IN INCHES 0 1 2 3

USERNAME => atruong

CU 08220

EA 0F1504

LAST REVISION 00-00-00 DATE PLOTTED => 15-JUL-2009

Dist	COUNTY	ROUTE	POST MILES TOTAL PROJECT	SHEET No.	TOTAL SHEETS
8	SBd	10	33.3/R36.9	XXX	XXX

REGISTERED CIVIL ENGINEER DATE

PLANS APPROVAL DATE

REGISTERED PROFESSIONAL ENGINEER No. Exp. CIVIL STATE OF CALIFORNIA

THE STATE OF CALIFORNIA OR ITS OFFICERS OR AGENTS SHALL NOT BE RESPONSIBLE FOR THE ACCURACY OR COMPLETENESS OF ELECTRONIC COPIES OF THIS PLAN SHEET.

SANBAG
1170 WEST 3RD STREET
2ND FLOOR
SAN BERNARDINO, CA 92410

CH2MHILL
2280 MARKET STREET
SUITE 200
RIVERSIDE, CA 92501

NOTE:

1. FOR COMPLETE R/W AND ACCURATE ACCESS DATA, SEE R/W RECORD MAPS AT DISTRICT OFFICE.

LEGEND:

VEGETATION CONTROL (MINOR CONCRETE)

PLACE HMA (MISCELLANEOUS AREAS)

CURVE DATA

No.	R	Δ	T	L
9	7963.42′	06°56′10″	482.60′	964.02′

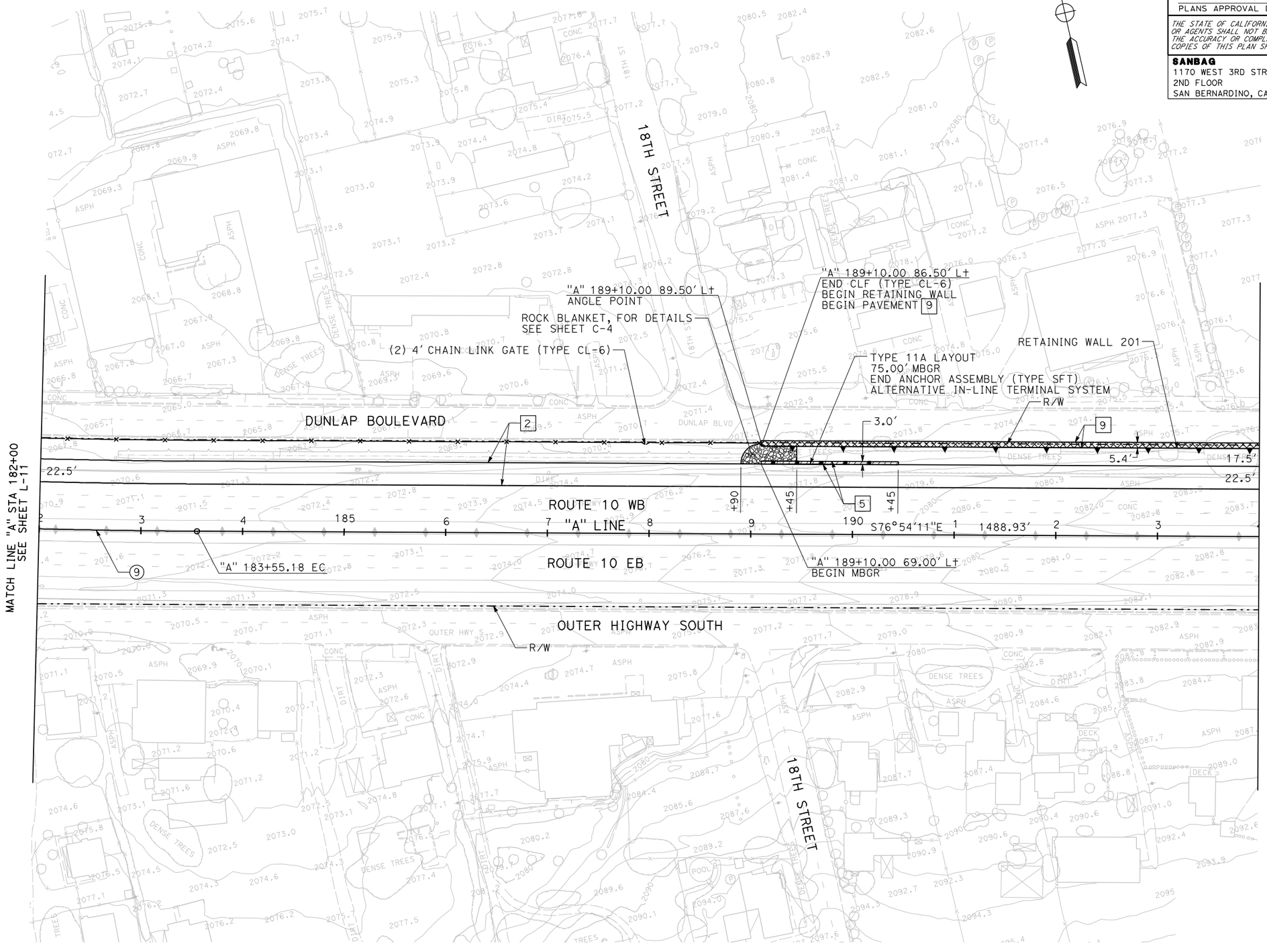

LAYOUT

SCALE 1″=50′

L-12

REVISED BY	DATE REVISED

CALCULATED-DESIGNED BY

CHECKED BY

CONSULTANT FUNCTIONAL SUPERVISOR

MARK HAGER

STATE OF CALIFORNIA - DEPARTMENT OF TRANSPORTATION

Caltrans

LAST REVISION DATE PLOTTED => 15-JUL-2009

RELATIVE BORDER SCALE IS IN INCHES 0 1 2 3

USERNAME => atruong

CU 08220

EA 0F1504

Dist	COUNTY	ROUTE	POST MILES TOTAL PROJECT	SHEET No.	TOTAL SHEETS
8	SBd	10	33.3/R36.9	XXX	XXX

REGISTERED CIVIL ENGINEER DATE

PLANS APPROVAL DATE

REGISTERED PROFESSIONAL ENGINEER No. Exp. CIVIL STATE OF CALIFORNIA

THE STATE OF CALIFORNIA OR ITS OFFICERS OR AGENTS SHALL NOT BE RESPONSIBLE FOR THE ACCURACY OR COMPLETENESS OF ELECTRONIC COPIES OF THIS PLAN SHEET.

SANBAG
1170 WEST 3RD STREET
2ND FLOOR
SAN BERNARDINO, CA 92410

CH2MHILL
2280 MARKET STREET
SUITE 200
RIVERSIDE, CA 92501

NOTE:

1. FOR COMPLETE R/W AND ACCURATE ACCESS DATA, SEE R/W RECORD MAPS AT DISTRICT OFFICE.

LEGEND:

PLACE HMA (MISCELLANEOUS AREAS)

CURVE DATA

No.	R	Δ	T	L
10	2913.09′	23°26′00″	604.15′	1191.42′

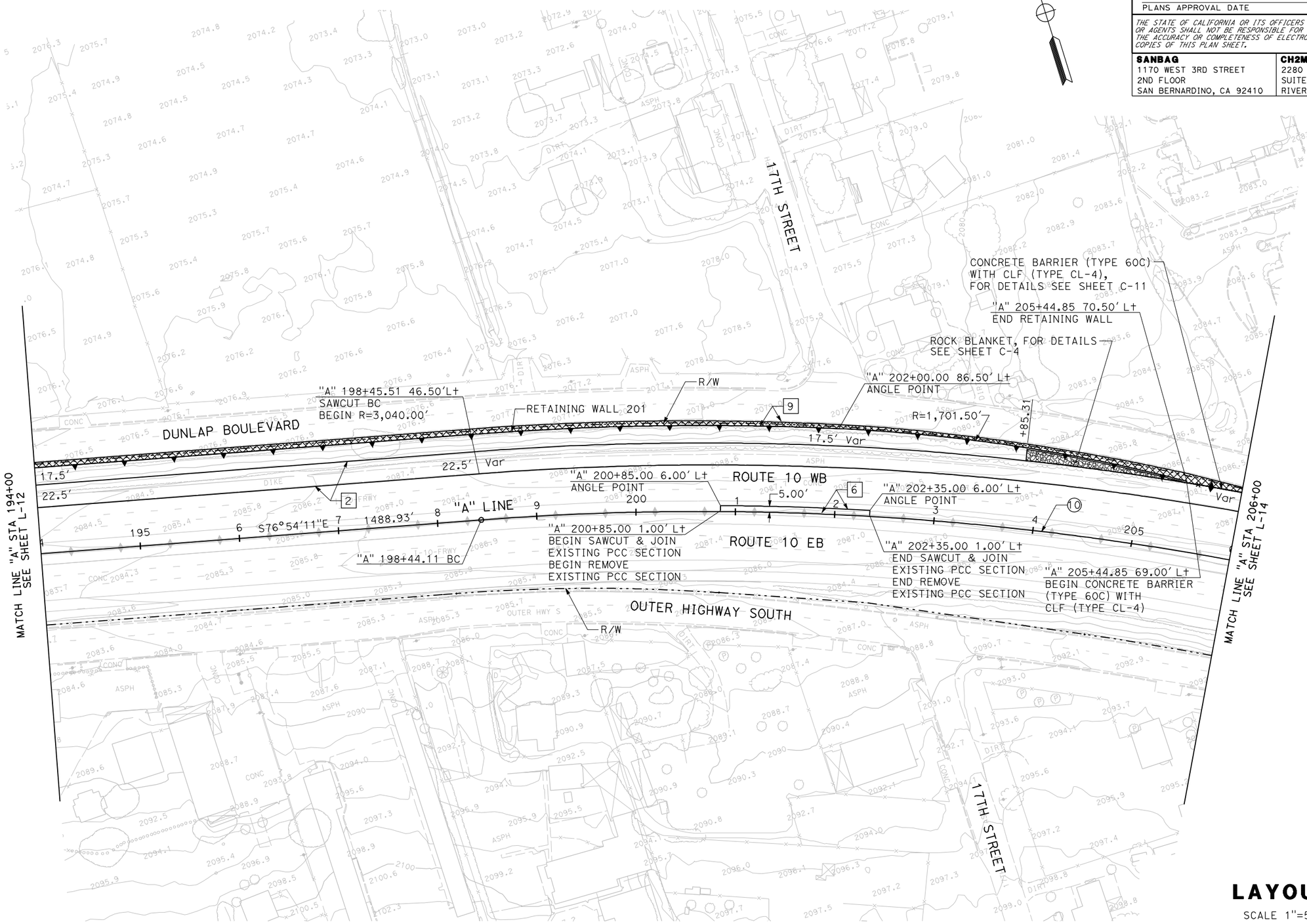

LAYOUT

SCALE 1″=50′

L-13

REVISED BY	DATE REVISED

CALCULATED-DESIGNED BY

CHECKED BY

CONSULTANT FUNCTIONAL SUPERVISOR: MARK HAGER

STATE OF CALIFORNIA - DEPARTMENT OF TRANSPORTATION

Caltrans

LAST REVISION 00-00-00 | DATE PLOTTED => 15-JUL-2009

RELATIVE BORDER SCALE IS IN INCHES 0 1 2 3

USERNAME => atruong

CU 08220

EA 0F1504

Dist	COUNTY	ROUTE	POST MILES TOTAL PROJECT	SHEET No.	TOTAL SHEETS
8	SBd	10	33.3/R36.9	XXX	XXX

REGISTERED CIVIL ENGINEER DATE

PLANS APPROVAL DATE

REGISTERED PROFESSIONAL ENGINEER No. Exp. CIVIL STATE OF CALIFORNIA

THE STATE OF CALIFORNIA OR ITS OFFICERS OR AGENTS SHALL NOT BE RESPONSIBLE FOR THE ACCURACY OR COMPLETENESS OF ELECTRONIC COPIES OF THIS PLAN SHEET.

SANBAG
1170 WEST 3RD STREET
2ND FLOOR
SAN BERNARDINO, CA 92410

CH2MHILL
2280 MARKET STREET
SUITE 200
RIVERSIDE, CA 92501

NOTE:

1. FOR COMPLETE R/W AND ACCURATE ACCESS DATA, SEE R/W RECORD MAPS AT DISTRICT OFFICE.

LEGEND:

VEGETATION CONTROL (MINOR CONCRETE)

PLACE HMA (MISCELLANEOUS AREAS)

CURVE DATA

No.	R	Δ	T	L
10	2913.09′	23°26′00″	604.15′	1191.42′

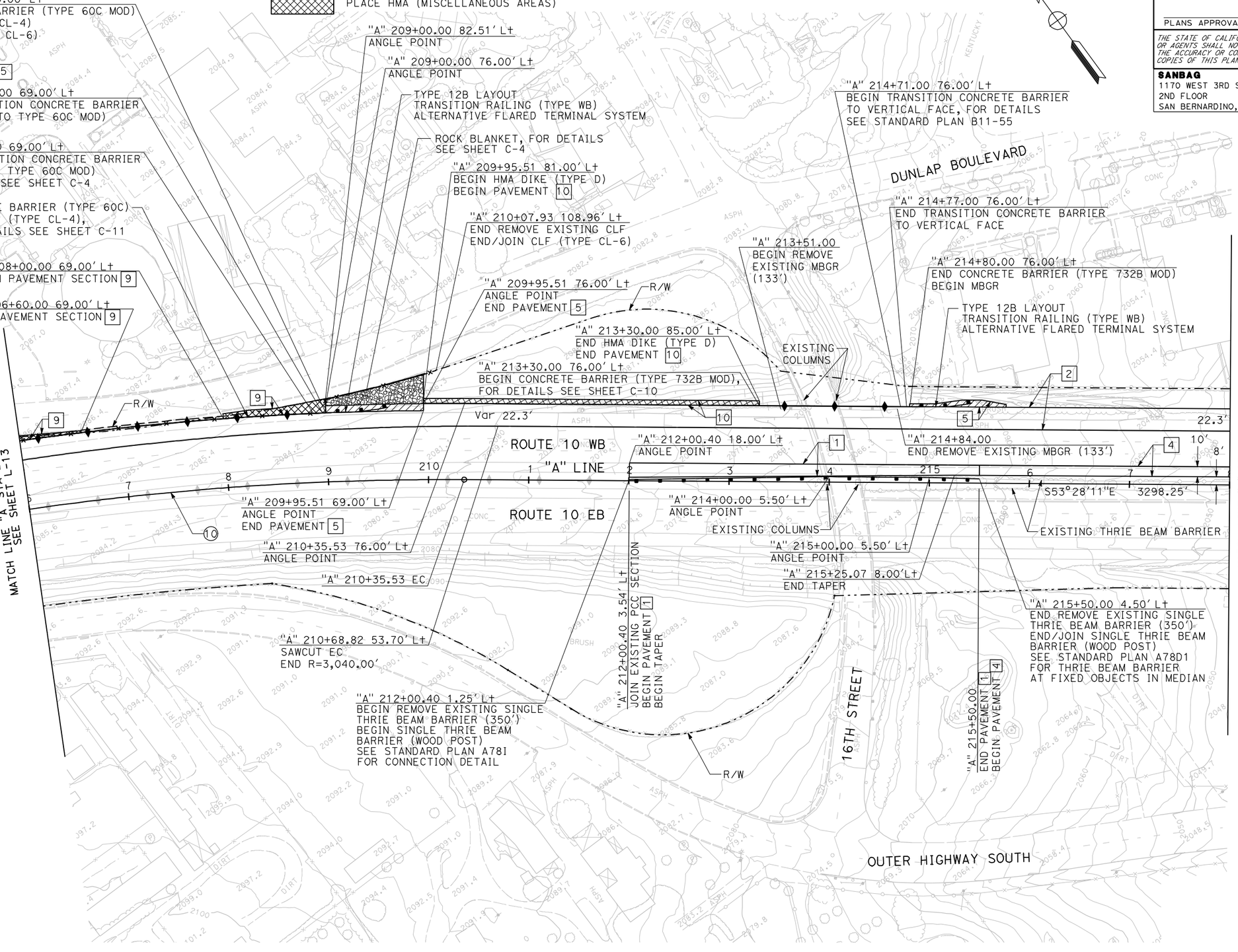

LAYOUT

SCALE 1″=50′

L-14

REVISED BY	DATE REVISED

CALCULATED-DESIGNED BY

CHECKED BY

CONSULTANT FUNCTIONAL SUPERVISOR: MARK HAGER

STATE OF CALIFORNIA - DEPARTMENT OF TRANSPORTATION

Caltrans

LAST REVISION 00-00-00 DATE PLOTTED => 15-JUL-2009

RELATIVE BORDER SCALE IS IN INCHES 0 1 2 3

USERNAME => atruong

CU 08220

EA 0F1504

Dist	COUNTY	ROUTE	POST MILES TOTAL PROJECT	SHEET No.	TOTAL SHEETS
8	SBd	10	33.3/R36.9	XXX	XXX

REGISTERED CIVIL ENGINEER DATE

PLANS APPROVAL DATE

REGISTERED PROFESSIONAL ENGINEER No. Exp. CIVIL STATE OF CALIFORNIA

THE STATE OF CALIFORNIA OR ITS OFFICERS OR AGENTS SHALL NOT BE RESPONSIBLE FOR THE ACCURACY OR COMPLETENESS OF ELECTRONIC COPIES OF THIS PLAN SHEET.

SANBAG
1170 WEST 3RD STREET
2ND FLOOR
SAN BERNARDINO, CA 92410

CH2MHILL
2280 MARKET STREET
SUITE 200
RIVERSIDE, CA 92501

NOTE:

1. FOR COMPLETE R/W AND ACCURATE ACCESS DATA, SEE R/W RECORD MAPS AT DISTRICT OFFICE.

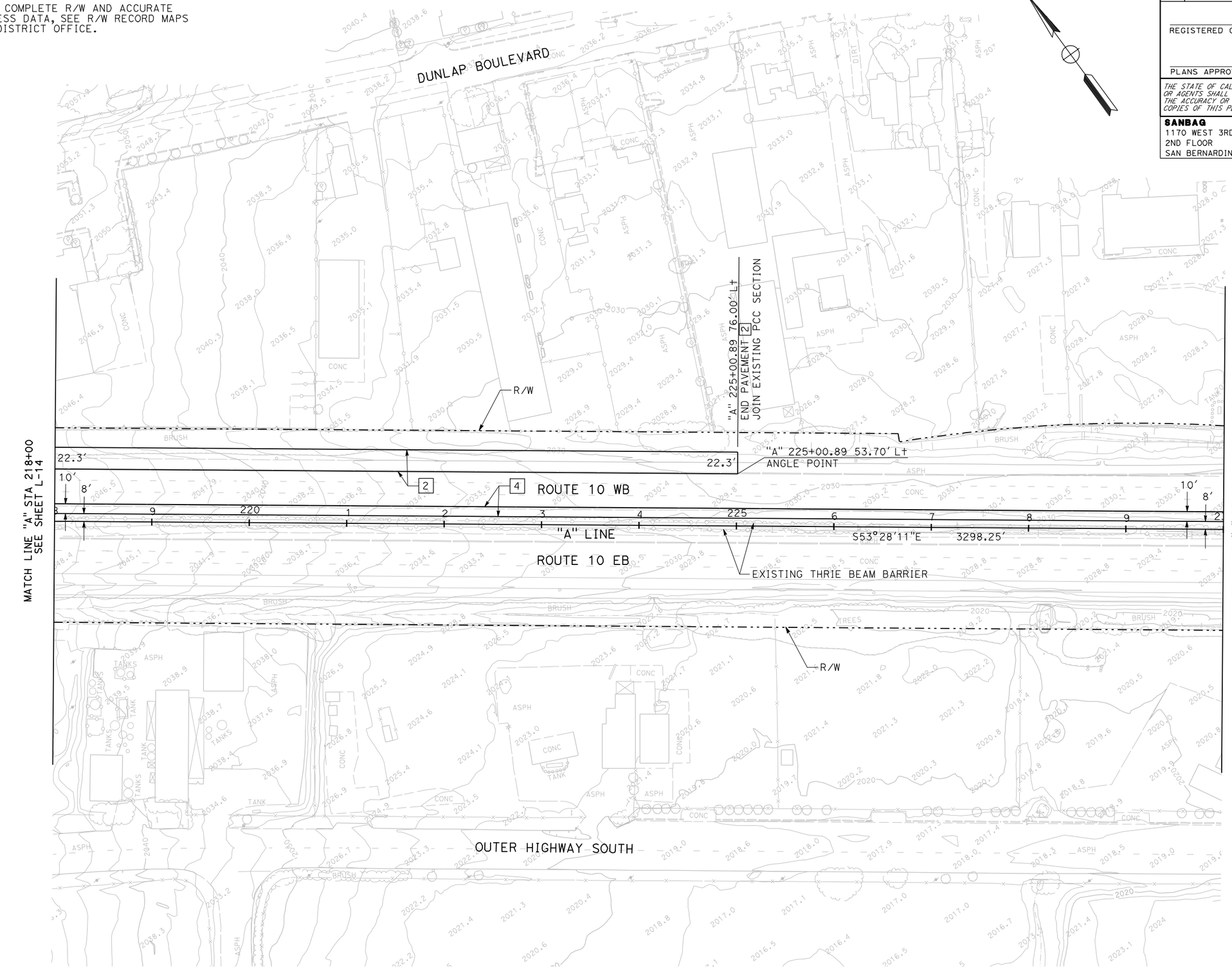

LAYOUT

SCALE 1"=50'

L-15

REVISED BY	DATE REVISED

CALCULATED-DESIGNED BY

CHECKED BY

CONSULTANT FUNCTIONAL SUPERVISOR: MARK HAGER

STATE OF CALIFORNIA - DEPARTMENT OF TRANSPORTATION

Caltrans

LAST REVISION | DATE PLOTTED => 15-JUL-2009

RELATIVE BORDER SCALE IS IN INCHES 0 1 2 3

USERNAME => dtruong

CU 08220

EA 0F1504

Dist	COUNTY	ROUTE	POST MILES TOTAL PROJECT	SHEET No.	TOTAL SHEETS
8	SBd	10	33.3/R36.9	XXX	XXX

REGISTERED CIVIL ENGINEER DATE

PLANS APPROVAL DATE

REGISTERED PROFESSIONAL ENGINEER No. Exp. CIVIL STATE OF CALIFORNIA

THE STATE OF CALIFORNIA OR ITS OFFICERS OR AGENTS SHALL NOT BE RESPONSIBLE FOR THE ACCURACY OR COMPLETENESS OF ELECTRONIC COPIES OF THIS PLAN SHEET.

SANBAG
1170 WEST 3RD STREET
2ND FLOOR
SAN BERNARDINO, CA 92410

CH2MHILL
2280 MARKET STREET
SUITE 200
RIVERSIDE, CA 92501

NOTE:

1. FOR COMPLETE R/W AND ACCURATE ACCESS DATA, SEE R/W RECORD MAPS AT DISTRICT OFFICE.

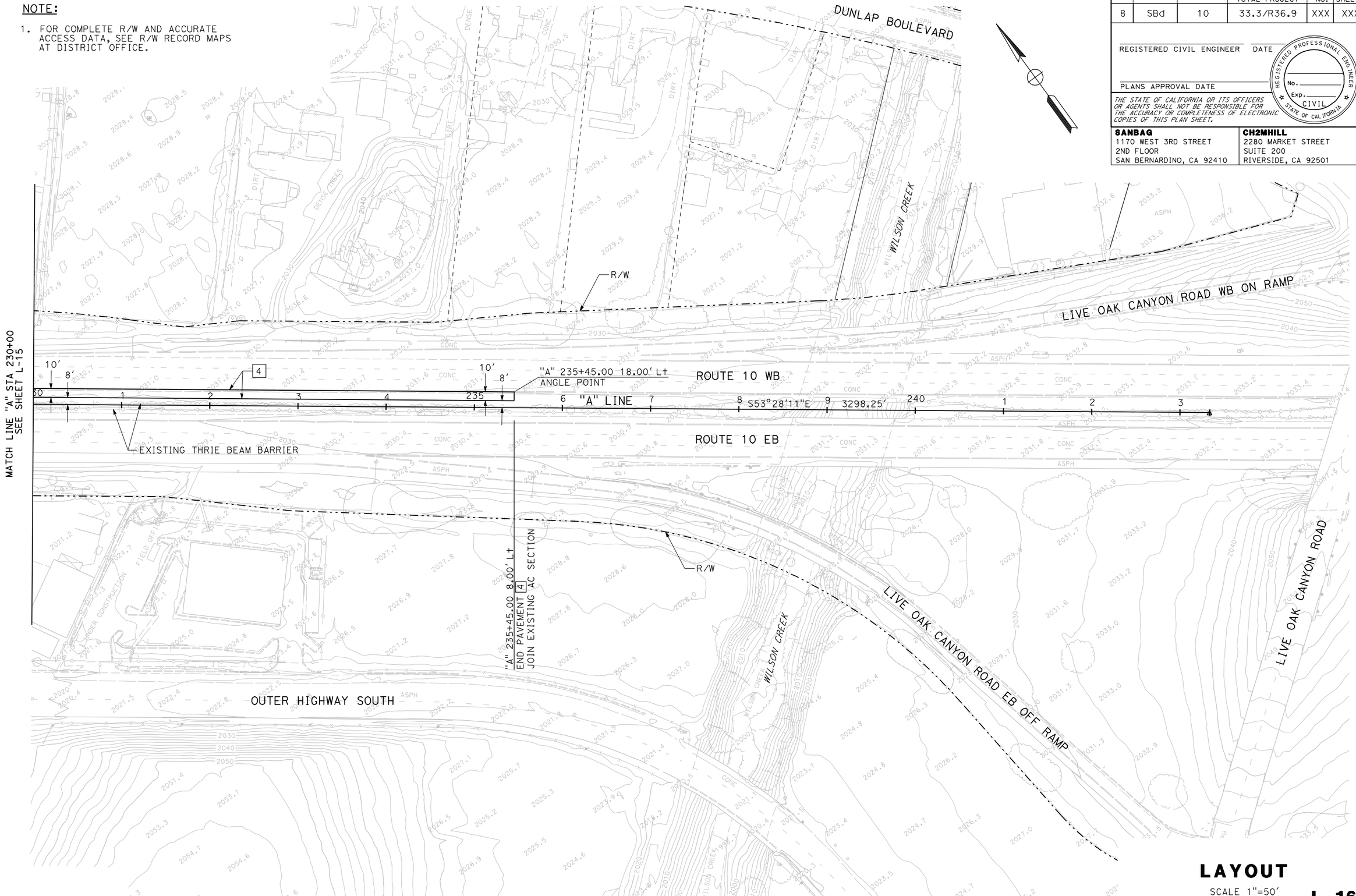

LAYOUT

SCALE 1"=50'

L-16

STATE OF CALIFORNIA - DEPARTMENT OF TRANSPORTATION

Caltrans

CONSULTANT FUNCTIONAL SUPERVISOR: MARK HAGER

CALCULATED-DESIGNED BY

CHECKED BY

REVISED BY

DATE REVISED

LAST REVISION 00-00-00

DATE PLOTTED => 15-JUL-2009

RELATIVE BORDER SCALE IS IN INCHES 0 1 2 3

USERNAME => atruong

CU 08220

EA 0F1504

Dist	COUNTY	ROUTE	POST MILES TOTAL PROJECT	SHEET No.	TOTAL SHEETS
8	SBd	10	33.3/R36.9	XXX	XXX

REGISTERED CIVIL ENGINEER DATE

PLANS APPROVAL DATE

REGISTERED PROFESSIONAL ENGINEER No. Exp. CIVIL STATE OF CALIFORNIA

THE STATE OF CALIFORNIA OR ITS OFFICERS OR AGENTS SHALL NOT BE RESPONSIBLE FOR THE ACCURACY OR COMPLETENESS OF ELECTRONIC COPIES OF THIS PLAN SHEET.

SANBAG
1170 WEST 3RD STREET
2ND FLOOR
SAN BERNARDINO, CA 92410

CH2MHILL
2280 MARKET STREET
SUITE 200
RIVERSIDE, CA 92501

NOTE:

1. FOR HORIZONTAL AND VERTICAL CONTROL DATA, PLEASE REFER TO THE RESIDENT ENGINEER PACKAGE.

HORIZONTAL DATUM

CALIFORNIA COORDINATE SYSTEM NAD 83 ZONE 5 (1992.88)
COMBINATION FACTOR 0.99991418

VERTICAL DATUM

EXISTING VERTICAL CONTROL SHOWN IS NGVD 29 AS PROVIDED BY CALTRANS DISTRICT 8 BENCH LEVEL SUMMARY FILE PM37-39.BMS

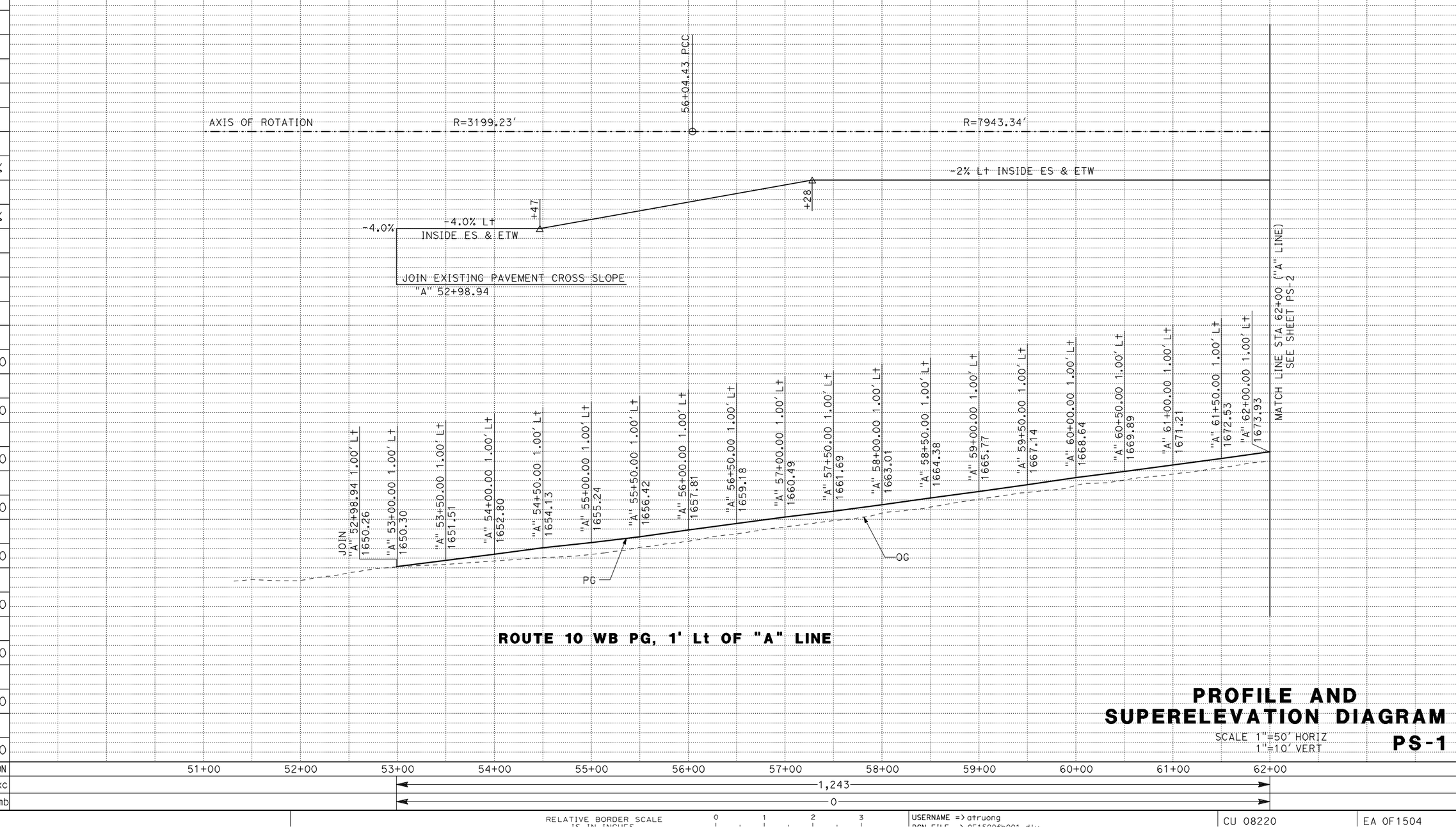

PROFILE AND SUPERELEVATION DIAGRAM

SCALE 1"=50' HORIZ
1"=10' VERT

PS-1

STATE OF CALIFORNIA - DEPARTMENT OF TRANSPORTATION

Caltrans

CONSULTANT FUNCTIONAL SUPERVISOR: MARK HAGER

CALCULATED-DESIGNED BY

CHECKED BY

REVISED BY

DATE REVISED

LAST REVISION

DATE PLOTTED => 15-JUL-2009

RELATIVE BORDER SCALE IS IN INCHES 0 1 2 3

USERNAME => atruong

CU 08220

EA 0F1504

Dist	COUNTY	ROUTE	POST MILES TOTAL PROJECT	SHEET No.	TOTAL SHEETS
8	SBd	10	33.3/R36.9	XXX	XXX

REGISTERED CIVIL ENGINEER DATE

PLANS APPROVAL DATE

REGISTERED PROFESSIONAL ENGINEER No. Exp. CIVIL STATE OF CALIFORNIA

THE STATE OF CALIFORNIA OR ITS OFFICERS OR AGENTS SHALL NOT BE RESPONSIBLE FOR THE ACCURACY OR COMPLETENESS OF ELECTRONIC COPIES OF THIS PLAN SHEET.

SANBAG
1170 WEST 3RD STREET
2ND FLOOR
SAN BERNARDINO, CA 92410

CH2MHILL
2280 MARKET STREET
SUITE 200
RIVERSIDE, CA 92501

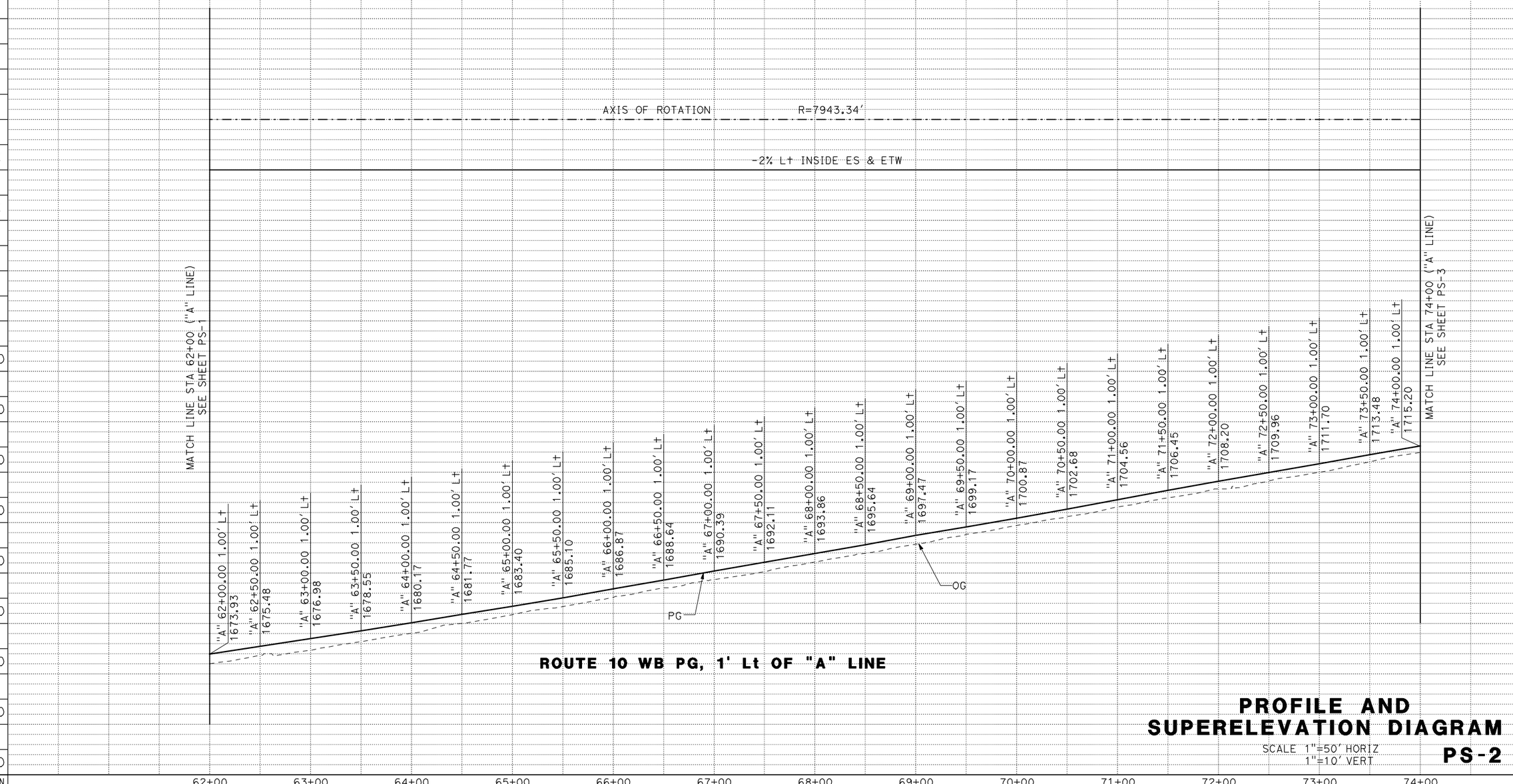

PROFILE AND SUPERELEVATION DIAGRAM

SCALE 1"=50' HORIZ
1"=10' VERT

PS-2

REVISED BY | DATE REVISED

CALCULATED-DESIGNED BY | CHECKED BY

CONSULTANT FUNCTIONAL SUPERVISOR: MARK HAGER

STATE OF CALIFORNIA - DEPARTMENT OF TRANSPORTATION

Caltrans

LAST REVISION | DATE PLOTTED => 15-JUL-2009

RELATIVE BORDER SCALE IS IN INCHES 0 1 2 3

USERNAME => atruong

CU 08220

EA 0F1504

Dist	COUNTY	ROUTE	POST MILES TOTAL PROJECT	SHEET No.	TOTAL SHEETS
8	SBd	10	33.3/R36.9	XXX	XXX

REGISTERED CIVIL ENGINEER DATE

PLANS APPROVAL DATE

REGISTERED PROFESSIONAL ENGINEER No. Exp. CIVIL STATE OF CALIFORNIA

THE STATE OF CALIFORNIA OR ITS OFFICERS OR AGENTS SHALL NOT BE RESPONSIBLE FOR THE ACCURACY OR COMPLETENESS OF ELECTRONIC COPIES OF THIS PLAN SHEET.

SANBAG
1170 WEST 3RD STREET
2ND FLOOR
SAN BERNARDINO, CA 92410

CH2MHILL
2280 MARKET STREET
SUITE 200
RIVERSIDE, CA 92501

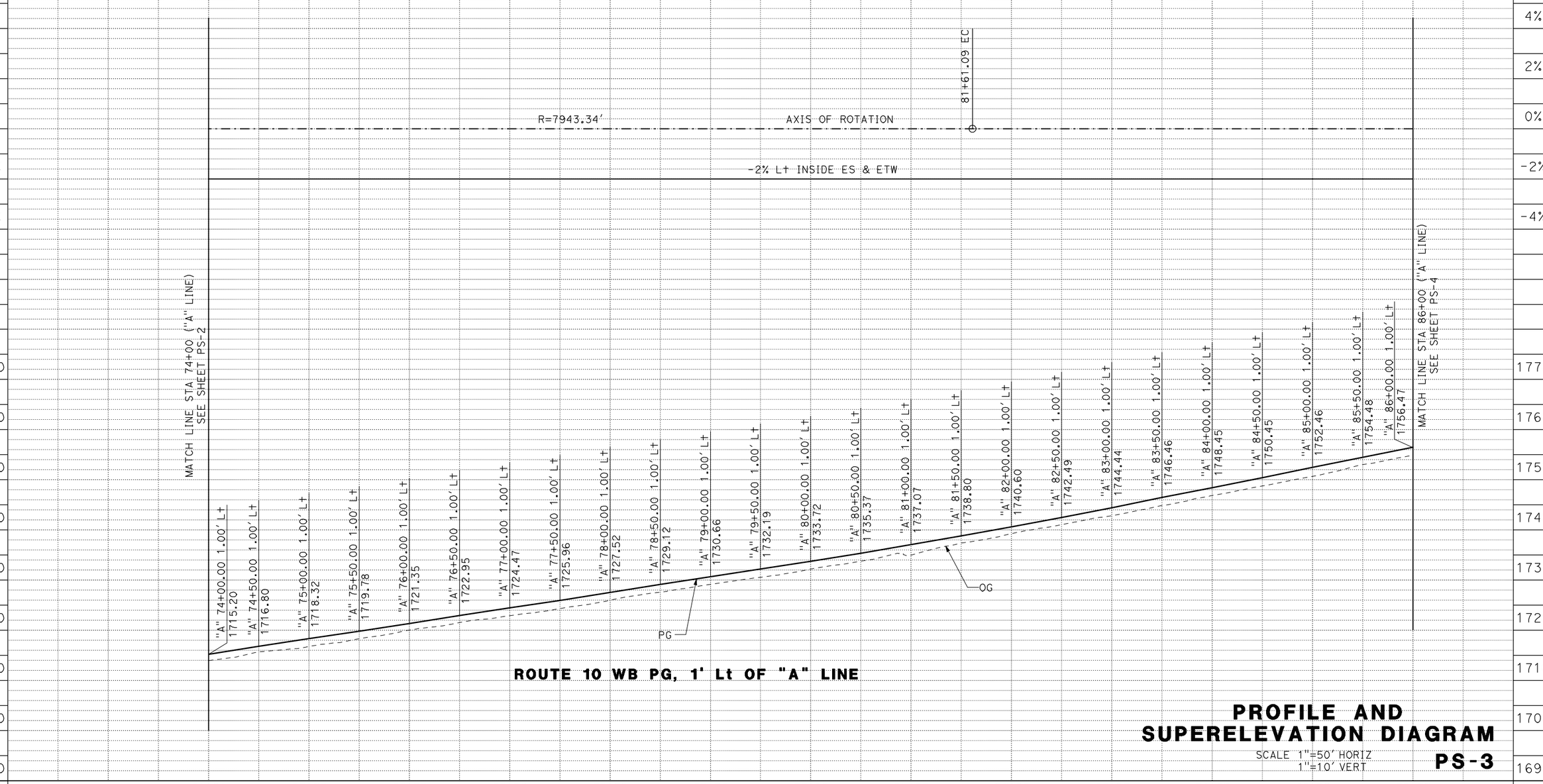

PROFILE AND SUPERELEVATION DIAGRAM

SCALE 1"=50' HORIZ
1"=10' VERT

PS-3

STATION	74+00	75+00	76+00	77+00	78+00	79+00	80+00	81+00	82+00	83+00	84+00	85+00	86+00	TOTAL
CY Exc	1,650													
CY Emb	0													

STATE OF CALIFORNIA - DEPARTMENT OF TRANSPORTATION

Caltrans

CONSULTANT FUNCTIONAL SUPERVISOR: MARK HAGER

CALCULATED-DESIGNED BY

CHECKED BY

REVISED BY

DATE REVISED

LAST REVISION 00-00-00 DATE PLOTTED => 15-JUL-2009 TIME PLOTTED => 00:00

RELATIVE BORDER SCALE IS IN INCHES 0 1 2 3

USERNAME => atruong

CU 08220

EA 0F1504

Dist	COUNTY	ROUTE	POST MILES TOTAL PROJECT	SHEET No.	TOTAL SHEETS
8	SBd	10	33.3/R36.9	XXX	XXX

REGISTERED CIVIL ENGINEER DATE

PLANS APPROVAL DATE

REGISTERED PROFESSIONAL ENGINEER No. Exp. CIVIL STATE OF CALIFORNIA

THE STATE OF CALIFORNIA OR ITS OFFICERS OR AGENTS SHALL NOT BE RESPONSIBLE FOR THE ACCURACY OR COMPLETENESS OF ELECTRONIC COPIES OF THIS PLAN SHEET.

SANBAG
1170 WEST 3RD STREET
2ND FLOOR
SAN BERNARDINO, CA 92410

CH2MHILL
2280 MARKET STREET
SUITE 200
RIVERSIDE, CA 92501

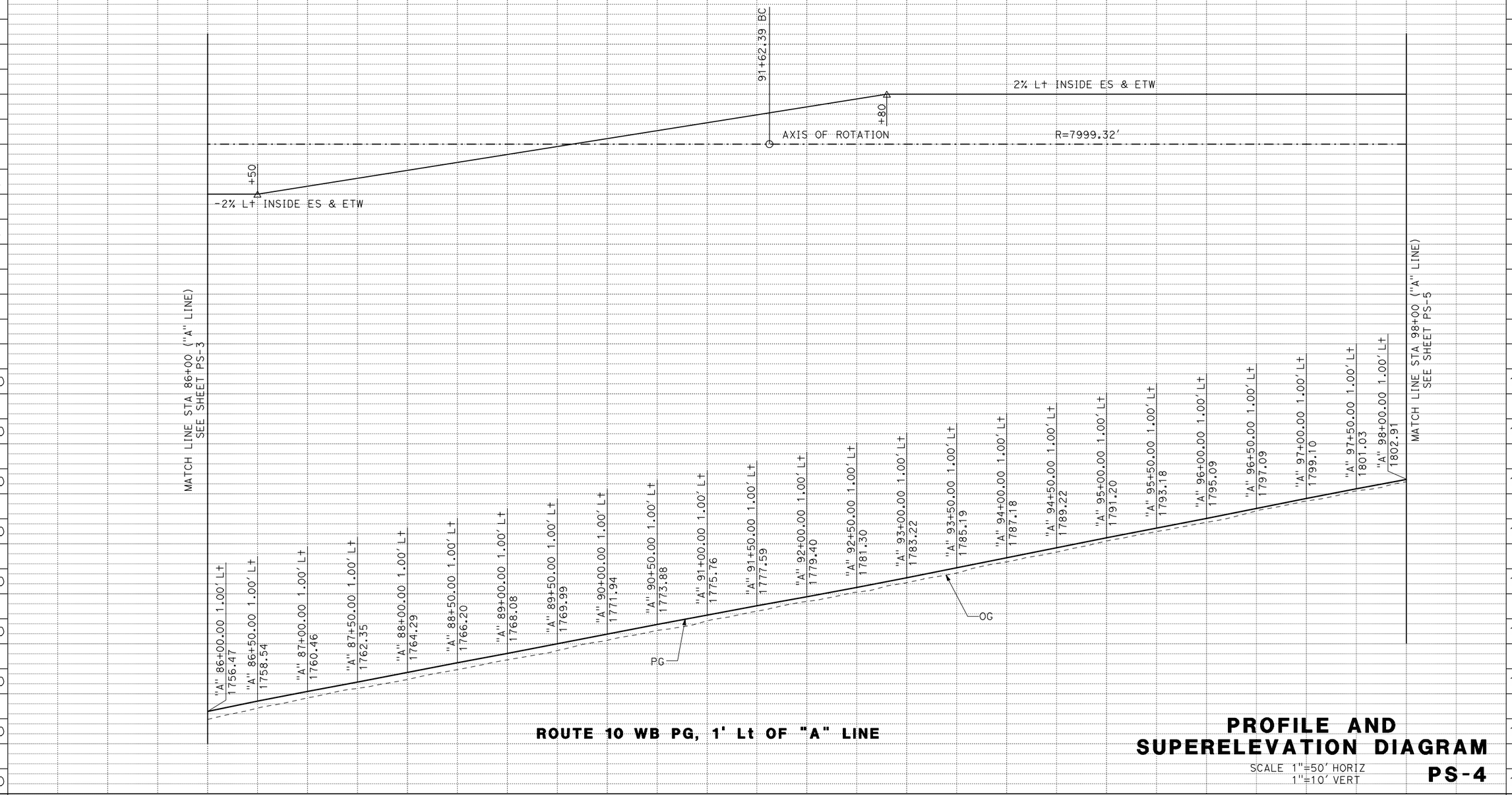

ROUTE 10 WB PG, 1' Lt OF "A" LINE

PROFILE AND SUPERELEVATION DIAGRAM

SCALE 1"=50' HORIZ
1"=10' VERT

PS-4

STATE OF CALIFORNIA - DEPARTMENT OF TRANSPORTATION

Caltrans

CONSULTANT FUNCTIONAL SUPERVISOR: MARK HAGER

CALCULATED-DESIGNED BY

CHECKED BY

REVISED BY

DATE REVISED

LAST REVISION 00-00-00

DATE PLOTTED => 15-JUL-2009

RELATIVE BORDER SCALE IS IN INCHES 0 1 2 3

USERNAME => atruong

CU 08220

EA 0F1504

Dist	COUNTY	ROUTE	POST MILES TOTAL PROJECT	SHEET No.	TOTAL SHEETS
8	SBd	10	33.3/R36.9	XXX	XXX

REGISTERED CIVIL ENGINEER DATE

PLANS APPROVAL DATE

REGISTERED PROFESSIONAL ENGINEER No. Exp. CIVIL STATE OF CALIFORNIA

THE STATE OF CALIFORNIA OR ITS OFFICERS OR AGENTS SHALL NOT BE RESPONSIBLE FOR THE ACCURACY OR COMPLETENESS OF ELECTRONIC COPIES OF THIS PLAN SHEET.

SANBAG
1170 WEST 3RD STREET
2ND FLOOR
SAN BERNARDINO, CA 92410

CH2MHILL
2280 MARKET STREET
SUITE 200
RIVERSIDE, CA 92501

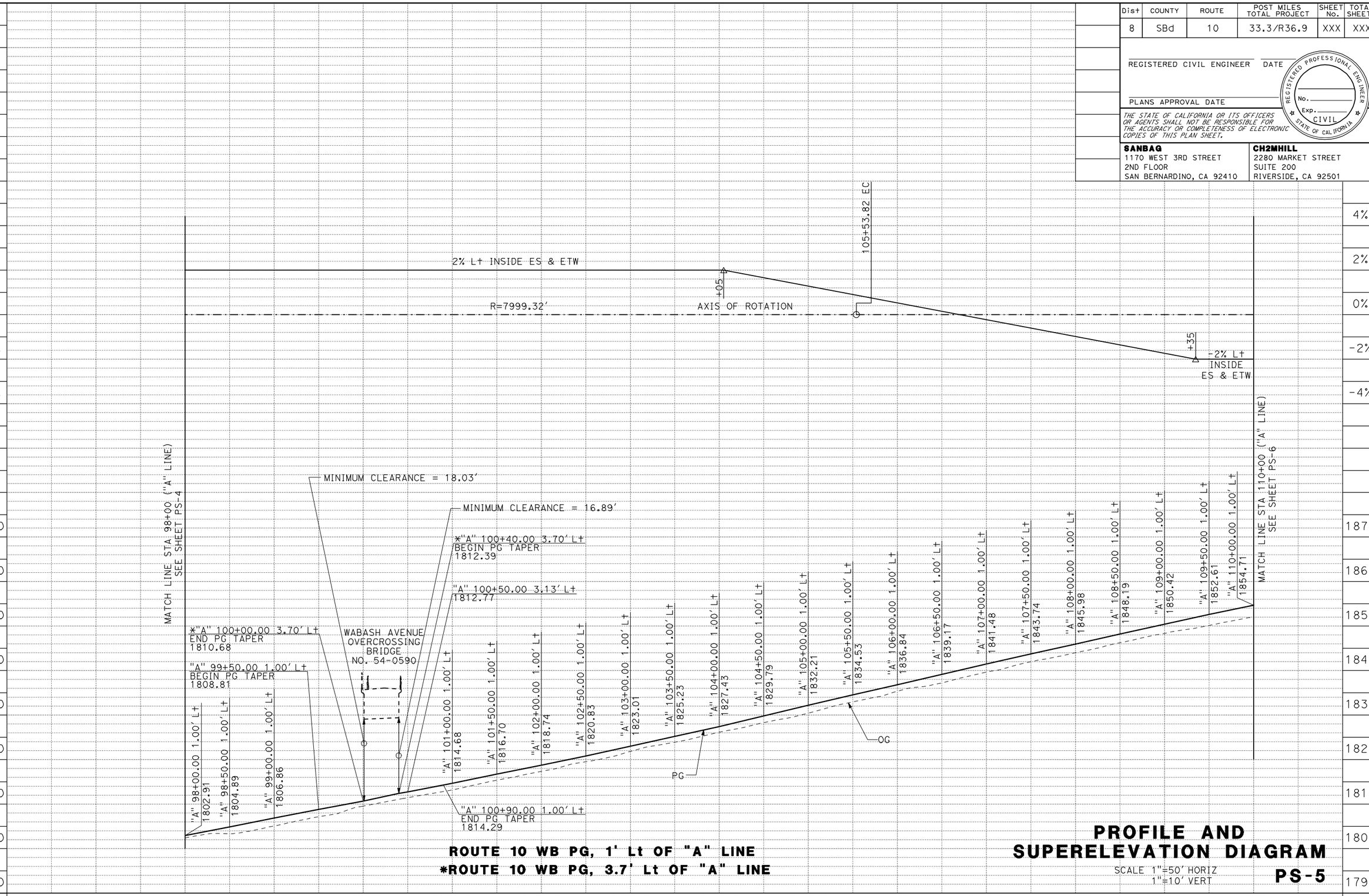

ROUTE 10 WB PG, 1' Lt OF "A" LINE
***ROUTE 10 WB PG, 3.7' Lt OF "A" LINE**

PROFILE AND SUPERELEVATION DIAGRAM

SCALE 1"=50' HORIZ
1"=10' VERT

PS-5

REVISED BY	DATE REVISED

CALCULATED-DESIGNED BY
CHECKED BY

CONSULTANT FUNCTIONAL SUPERVISOR
MARK HAGER

STATE OF CALIFORNIA - DEPARTMENT OF TRANSPORTATION
Caltrans

LAST REVISION 00-00-00 DATE PLOTTED => 15-JUL-2009 TIME PLOTTED => 00:00

RELATIVE BORDER SCALE IS IN INCHES 0 1 2 3

USERNAME => atruong

CU 08220

EA 0F1504

Dist	COUNTY	ROUTE	POST MILES TOTAL PROJECT	SHEET No.	TOTAL SHEETS
8	SBd	10	33.3/R36.9	XXX	XXX

REGISTERED CIVIL ENGINEER DATE

PLANS APPROVAL DATE

REGISTERED PROFESSIONAL ENGINEER No. Exp. CIVIL STATE OF CALIFORNIA

THE STATE OF CALIFORNIA OR ITS OFFICERS OR AGENTS SHALL NOT BE RESPONSIBLE FOR THE ACCURACY OR COMPLETENESS OF ELECTRONIC COPIES OF THIS PLAN SHEET.

SANBAG
1170 WEST 3RD STREET
2ND FLOOR
SAN BERNARDINO, CA 92410

CH2MHILL
2280 MARKET STREET
SUITE 200
RIVERSIDE, CA 92501

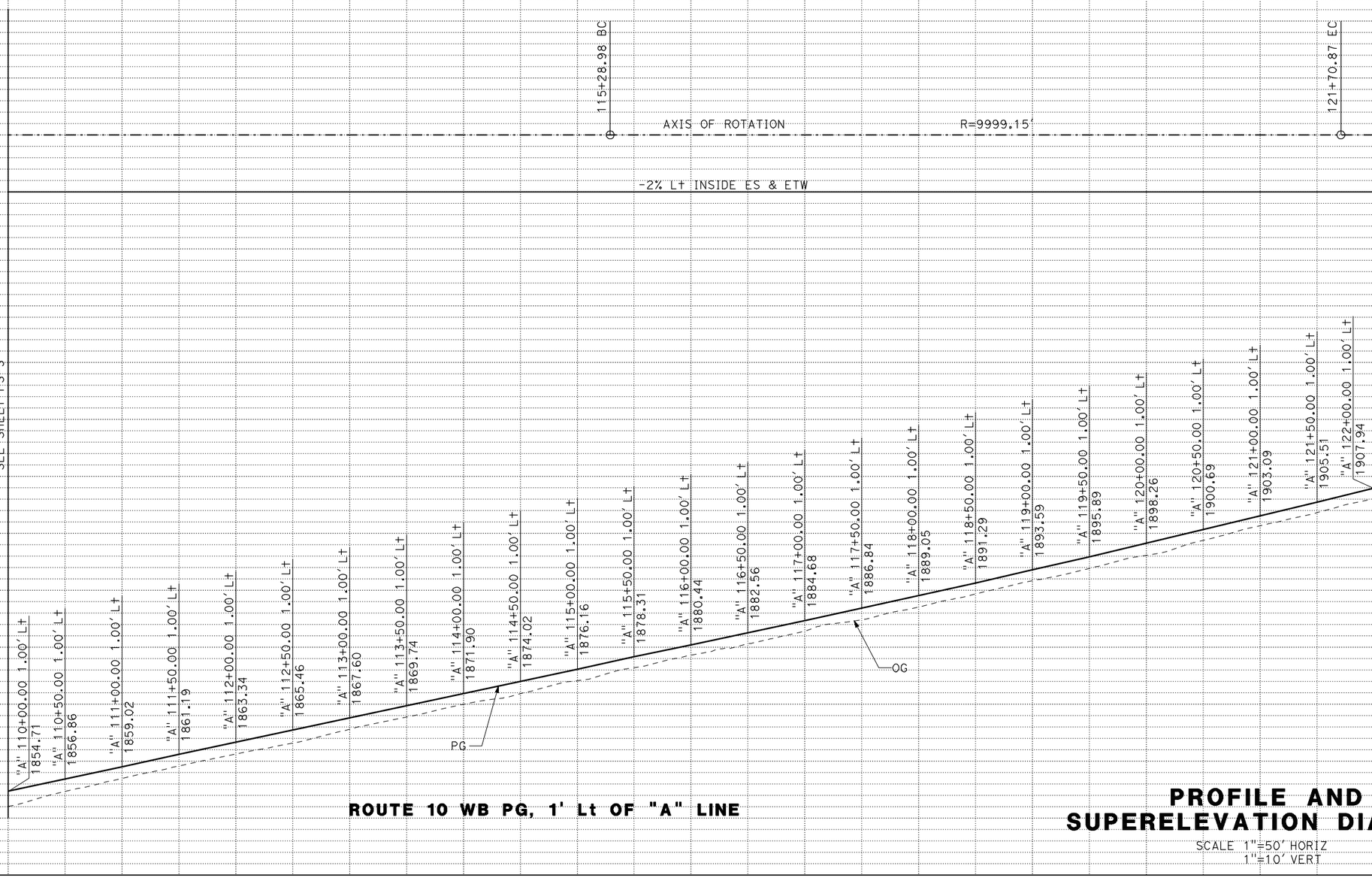

ROUTE 10 WB PG, 1' Lt OF "A" LINE

PROFILE AND SUPERELEVATION DIAGRAM

SCALE 1"=50' HORIZ
1"=10' VERT

PS-6

REVISED BY | DATE REVISED

CALCULATED-DESIGNED BY | CHECKED BY

CONSULTANT FUNCTIONAL SUPERVISOR: MARK HAGER

STATE OF CALIFORNIA - DEPARTMENT OF TRANSPORTATION

Caltrans

LAST REVISION | DATE PLOTTED => 15-JUL-2009

RELATIVE BORDER SCALE IS IN INCHES 0 1 2 3

USERNAME => atruong

CU 08220

EA 0F1504

Dist	COUNTY	ROUTE	POST MILES TOTAL PROJECT	SHEET No.	TOTAL SHEETS
8	SBd	10	33.3/R36.9	XXX	XXX

REGISTERED CIVIL ENGINEER DATE

PLANS APPROVAL DATE

REGISTERED PROFESSIONAL ENGINEER No. Exp. CIVIL STATE OF CALIFORNIA

THE STATE OF CALIFORNIA OR ITS OFFICERS OR AGENTS SHALL NOT BE RESPONSIBLE FOR THE ACCURACY OR COMPLETENESS OF ELECTRONIC COPIES OF THIS PLAN SHEET.

SANBAG
1170 WEST 3RD STREET
2ND FLOOR
SAN BERNARDINO, CA 92410

CH2MHILL
2280 MARKET STREET
SUITE 200
RIVERSIDE, CA 92501

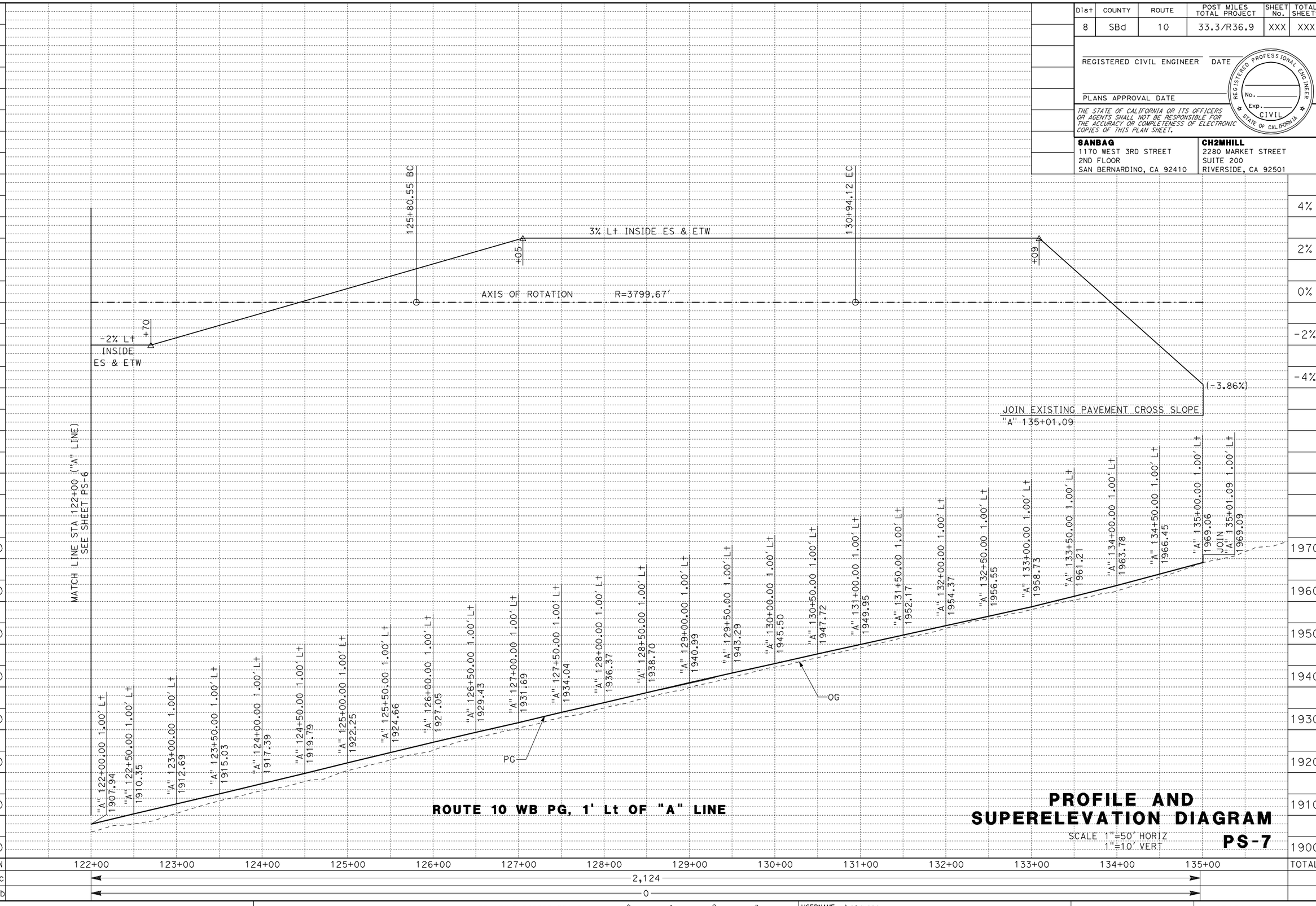

ROUTE 10 WB PG, 1' Lt OF "A" LINE

PROFILE AND SUPERELEVATION DIAGRAM

SCALE 1"=50' HORIZ
1"=10' VERT

PS-7

STATE OF CALIFORNIA - DEPARTMENT OF TRANSPORTATION

Caltrans

CONSULTANT FUNCTIONAL SUPERVISOR: MARK HAGER

CALCULATED-DESIGNED BY

CHECKED BY

REVISED BY

DATE REVISED

LAST REVISION 00-00-00

DATE PLOTTED => 15-JUL-2009

RELATIVE BORDER SCALE IS IN INCHES 0 1 2 3

USERNAME => atruong

CU 08220

EA 0F1504

Dist	COUNTY	ROUTE	POST MILES TOTAL PROJECT	SHEET No.	TOTAL SHEETS
8	SBd	10	33.3/R36.9	XXX	XXX

REGISTERED CIVIL ENGINEER DATE

PLANS APPROVAL DATE

REGISTERED PROFESSIONAL ENGINEER No. Exp. CIVIL STATE OF CALIFORNIA

THE STATE OF CALIFORNIA OR ITS OFFICERS OR AGENTS SHALL NOT BE RESPONSIBLE FOR THE ACCURACY OR COMPLETENESS OF ELECTRONIC COPIES OF THIS PLAN SHEET.

SANBAG
1170 WEST 3RD STREET
2ND FLOOR
SAN BERNARDINO, CA 92410

CH2MHILL
2280 MARKET STREET
SUITE 200
RIVERSIDE, CA 92501

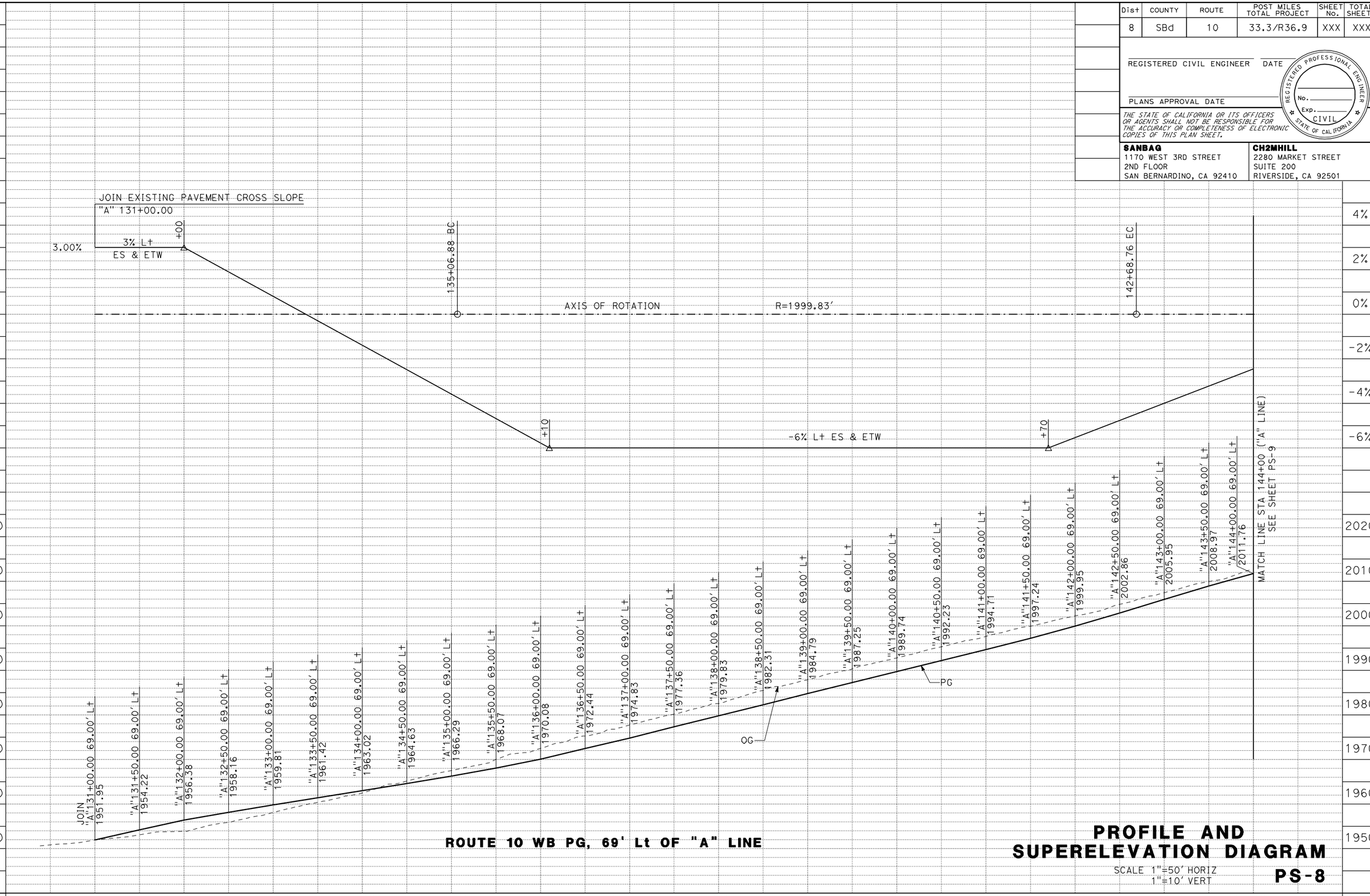

ROUTE 10 WB PG, 69' Lt OF "A" LINE

PROFILE AND SUPERELEVATION DIAGRAM

SCALE 1"=50' HORIZ
1"=10' VERT

PS-8

REVISED BY | DATE REVISED

CALCULATED-DESIGNED BY | CHECKED BY

CONSULTANT FUNCTIONAL SUPERVISOR: MARK HAGER

STATE OF CALIFORNIA - DEPARTMENT OF TRANSPORTATION

Caltrans

LAST REVISION 00-00-00 | DATE PLOTTED => 15-JUL-2009 | TIME PLOTTED => 00:00

RELATIVE BORDER SCALE IS IN INCHES 0 1 2 3

USERNAME => atruong

CU 08220

EA 0F1504

Dist	COUNTY	ROUTE	POST MILES TOTAL PROJECT	SHEET No.	TOTAL SHEETS
8	SBd	10	33.3/R36.9	XXX	XXX

REGISTERED CIVIL ENGINEER DATE

PLANS APPROVAL DATE

REGISTERED PROFESSIONAL ENGINEER No. Exp. CIVIL STATE OF CALIFORNIA

THE STATE OF CALIFORNIA OR ITS OFFICERS OR AGENTS SHALL NOT BE RESPONSIBLE FOR THE ACCURACY OR COMPLETENESS OF ELECTRONIC COPIES OF THIS PLAN SHEET.

SANBAG
1170 WEST 3RD STREET
2ND FLOOR
SAN BERNARDINO, CA 92410

CH2MHILL
2280 MARKET STREET
SUITE 200
RIVERSIDE, CA 92501

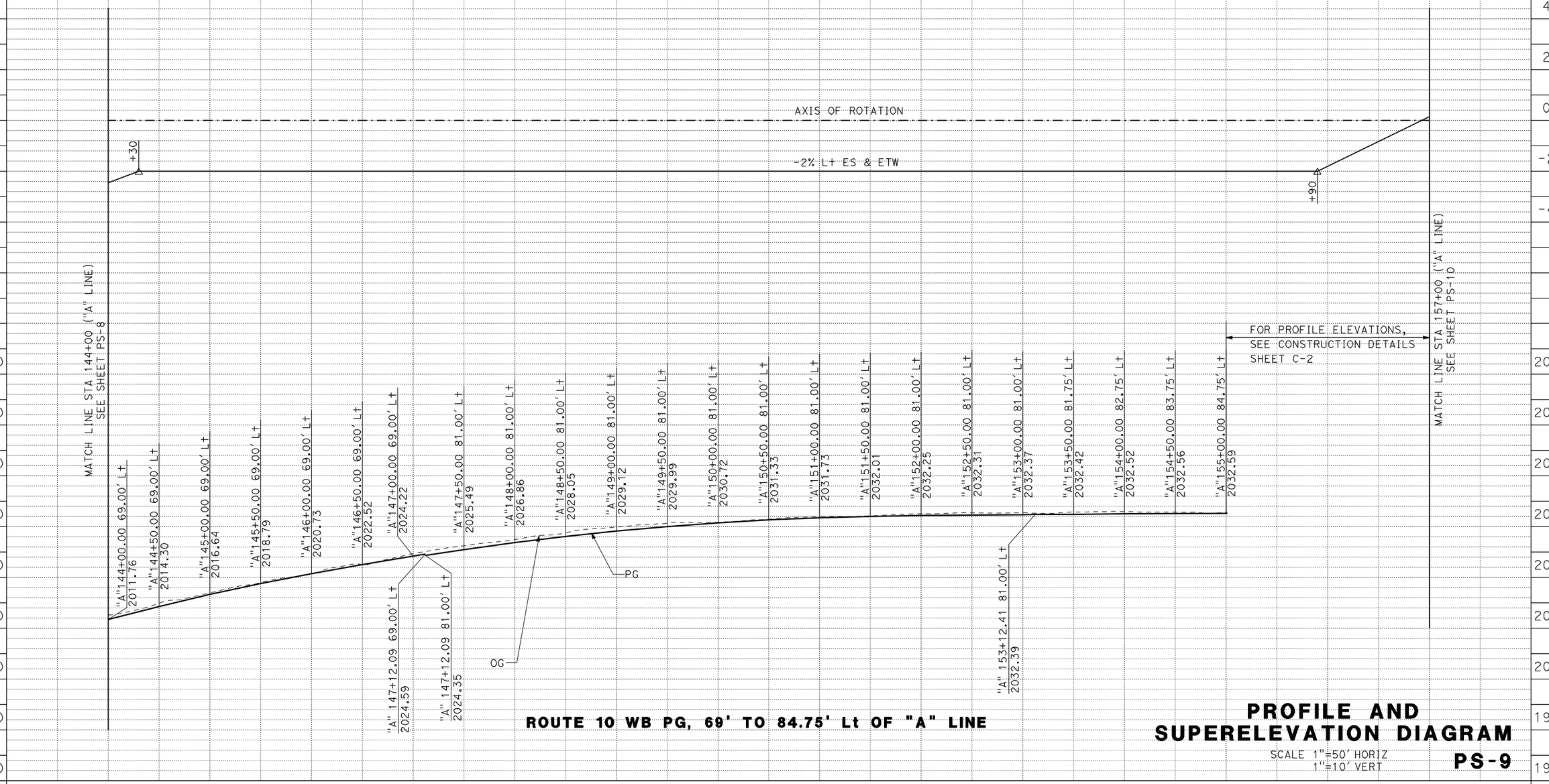

ROUTE 10 WB PG, 69' TO 84.75' Lt OF "A" LINE

PROFILE AND SUPERELEVATION DIAGRAM

SCALE 1"=50' HORIZ
1"=10' VERT

PS-9

REVISED BY	DATE REVISED

CALCULATED-DESIGNED BY

CHECKED BY

CONSULTANT FUNCTIONAL SUPERVISOR

MARK HAGER

STATE OF CALIFORNIA - DEPARTMENT OF TRANSPORTATION

Caltrans

LAST REVISION 00-00-00 DATE PLOTTED => 15-JUL-2009

RELATIVE BORDER SCALE IS IN INCHES 0 1 2 3

USERNAME => atruong

CU 08220

EA 0F1504

Dist	COUNTY	ROUTE	POST MILES TOTAL PROJECT	SHEET No.	TOTAL SHEETS
8	SBd	10	33.3/R36.9	XXX	XXX

REGISTERED CIVIL ENGINEER DATE

PLANS APPROVAL DATE

REGISTERED PROFESSIONAL ENGINEER No. Exp. CIVIL STATE OF CALIFORNIA

THE STATE OF CALIFORNIA OR ITS OFFICERS OR AGENTS SHALL NOT BE RESPONSIBLE FOR THE ACCURACY OR COMPLETENESS OF ELECTRONIC COPIES OF THIS PLAN SHEET.

SANBAG
1170 WEST 3RD STREET
2ND FLOOR
SAN BERNARDINO, CA 92410

CH2MHILL
2280 MARKET STREET
SUITE 200
RIVERSIDE, CA 92501

NOTE:

1. FOR YUCAIPA BLVD WESTBOUND ENTRANCE RAMP PROFILE, SEE SHEET C-2 AND C-3 FOR DETAILS

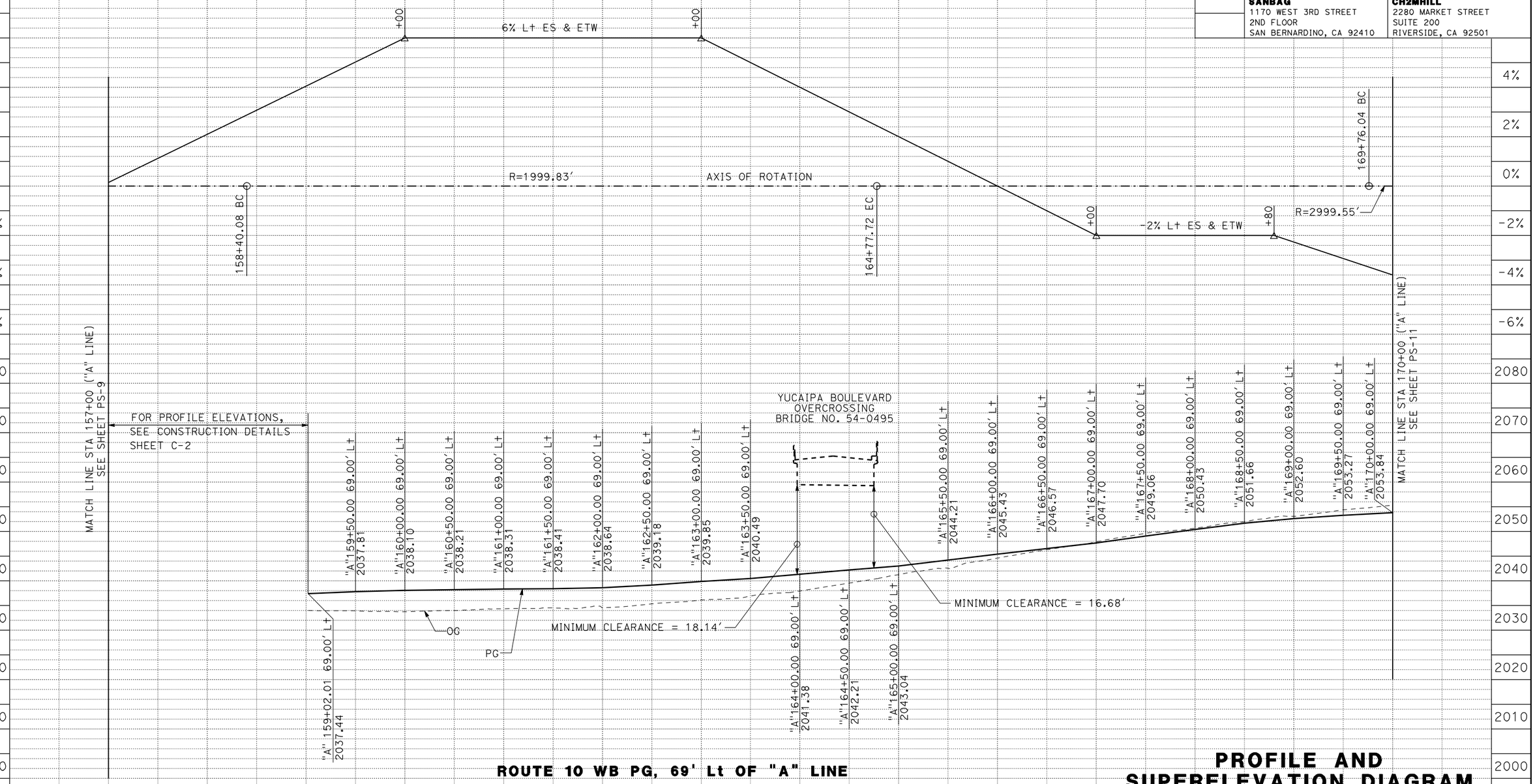

ROUTE 10 WB PG, 69' Lt OF "A" LINE

PROFILE AND SUPERELEVATION DIAGRAM

SCALE 1"=50' HORIZ
1"=10' VERT

PS-10

REVISED BY | DATE REVISED

CALCULATED-DESIGNED BY | CHECKED BY

CONSULTANT FUNCTIONAL SUPERVISOR: MARK HAGER

STATE OF CALIFORNIA - DEPARTMENT OF TRANSPORTATION

Caltrans

LAST REVISION | DATE PLOTTED => 15-JUL-2009

RELATIVE BORDER SCALE IS IN INCHES 0 1 2 3

USERNAME => atruong

CU 08220

EA 0F1504

Dist	COUNTY	ROUTE	POST MILES TOTAL PROJECT	SHEET No.	TOTAL SHEETS
8	SBd	10	33.3/R36.9	XXX	XXX

REGISTERED CIVIL ENGINEER DATE

PLANS APPROVAL DATE

REGISTERED PROFESSIONAL ENGINEER No. Exp. CIVIL STATE OF CALIFORNIA

THE STATE OF CALIFORNIA OR ITS OFFICERS OR AGENTS SHALL NOT BE RESPONSIBLE FOR THE ACCURACY OR COMPLETENESS OF ELECTRONIC COPIES OF THIS PLAN SHEET.

SANBAG
1170 WEST 3RD STREET
2ND FLOOR
SAN BERNARDINO, CA 92410

CH2MHILL
2280 MARKET STREET
SUITE 200
RIVERSIDE, CA 92501

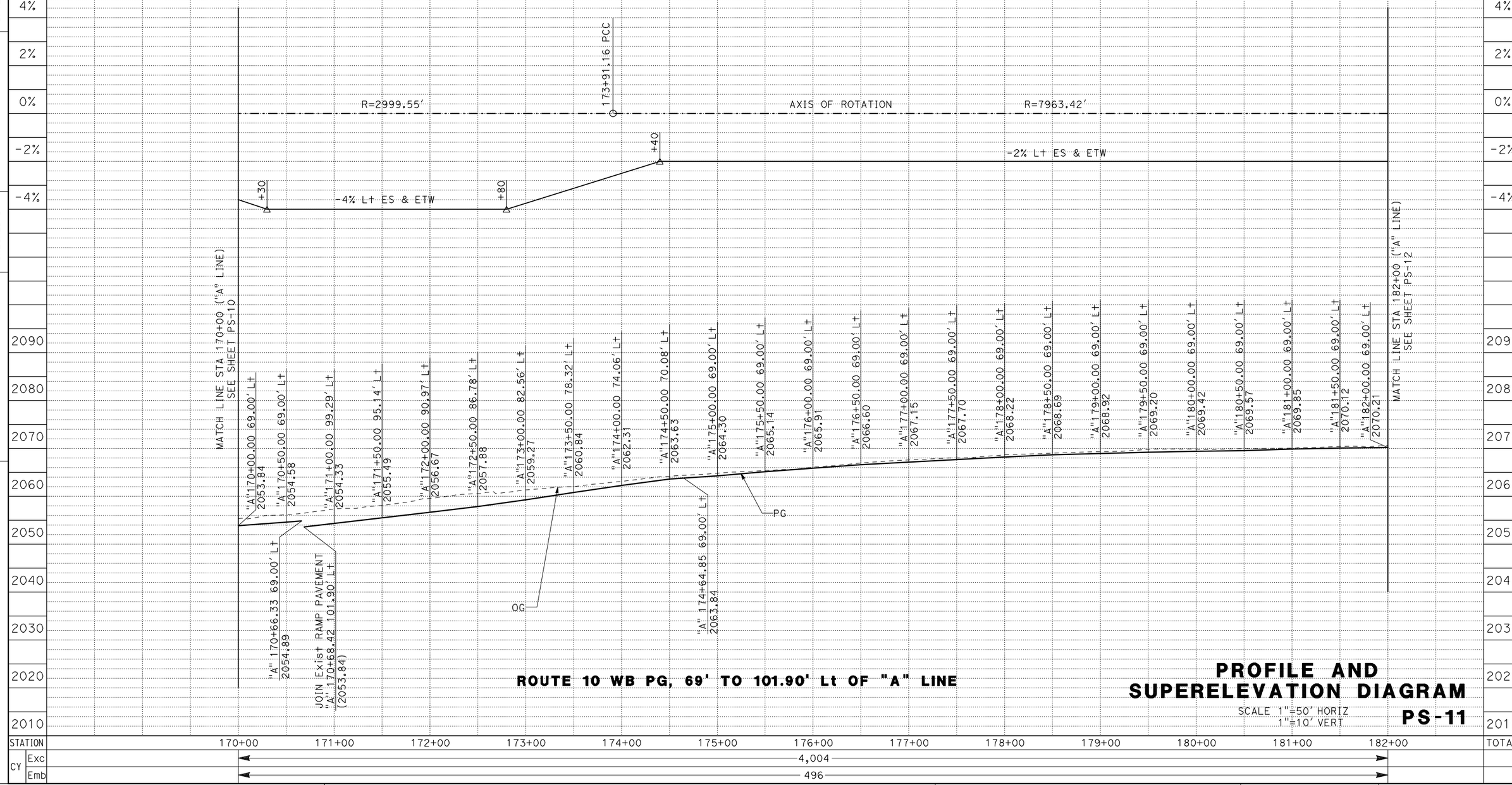

ROUTE 10 WB PG, 69' TO 101.90' Lt OF "A" LINE

PROFILE AND SUPERELEVATION DIAGRAM

SCALE 1"=50' HORIZ
1"=10' VERT

PS-11

STATE OF CALIFORNIA - DEPARTMENT OF TRANSPORTATION

Caltrans

CONSULTANT FUNCTIONAL SUPERVISOR: MARK HAGER

CALCULATED-DESIGNED BY

CHECKED BY

REVISED BY

DATE REVISED

LAST REVISION

DATE PLOTTED => 15-JUL-2009

RELATIVE BORDER SCALE IS IN INCHES 0 1 2 3

USERNAME => atruong

CU 08220

EA 0F1504

Dist	COUNTY	ROUTE	POST MILES TOTAL PROJECT	SHEET No.	TOTAL SHEETS
8	SBd	10	33.3/R36.9	XXX	XXX

REGISTERED CIVIL ENGINEER DATE

PLANS APPROVAL DATE

REGISTERED PROFESSIONAL ENGINEER No. Exp. CIVIL STATE OF CALIFORNIA

THE STATE OF CALIFORNIA OR ITS OFFICERS OR AGENTS SHALL NOT BE RESPONSIBLE FOR THE ACCURACY OR COMPLETENESS OF ELECTRONIC COPIES OF THIS PLAN SHEET.

SANBAG
1170 WEST 3RD STREET
2ND FLOOR
SAN BERNARDINO, CA 92410

CH2MHILL
2280 MARKET STREET
SUITE 200
RIVERSIDE, CA 92501

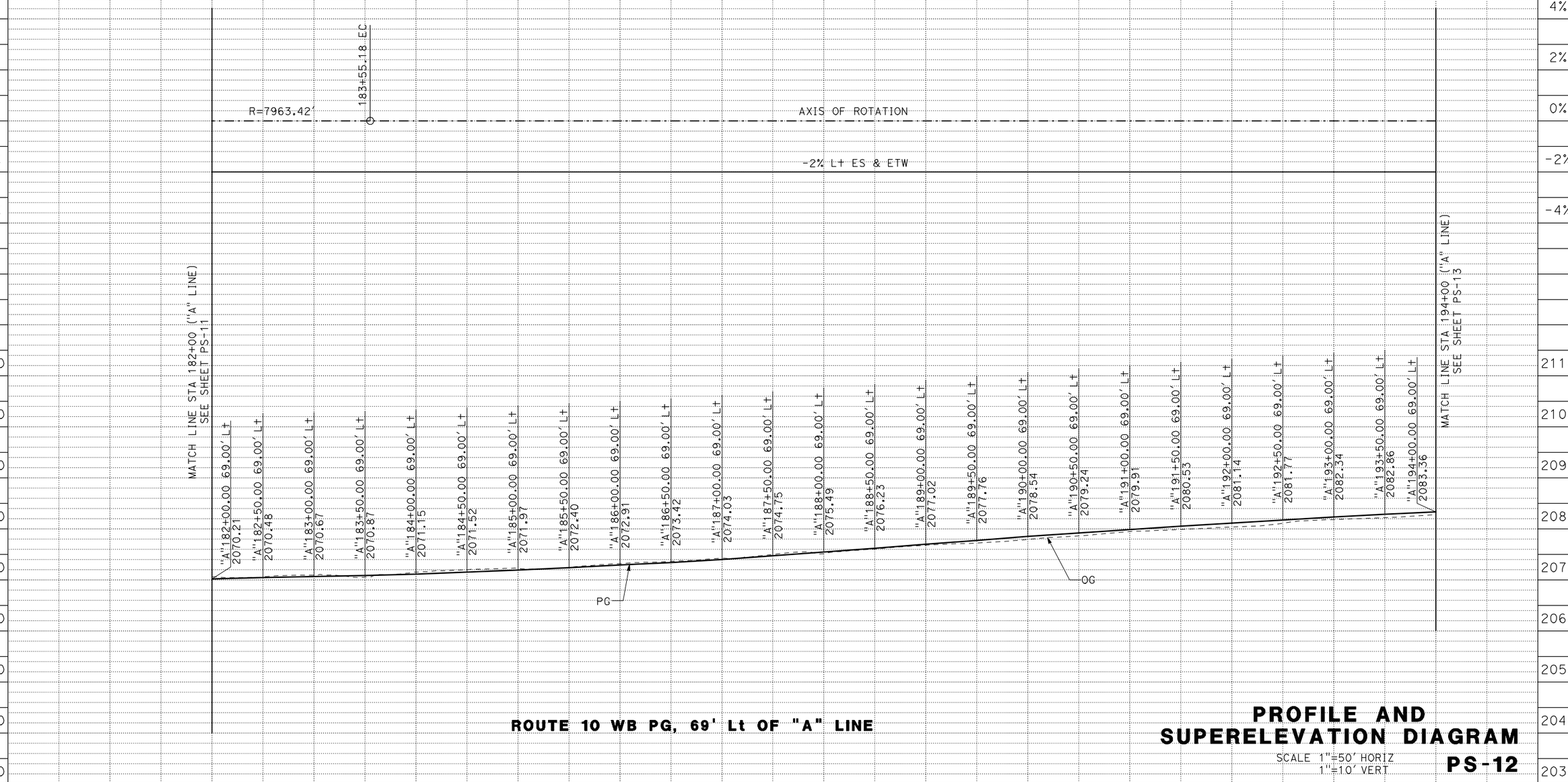

ROUTE 10 WB PG, 69' Lt OF "A" LINE

PROFILE AND SUPERELEVATION DIAGRAM

SCALE 1"=50' HORIZ
1"=10' VERT

PS-12

REVISED BY | DATE REVISED

CALCULATED-DESIGNED BY | CHECKED BY

CONSULTANT FUNCTIONAL SUPERVISOR: MARK HAGER

STATE OF CALIFORNIA - DEPARTMENT OF TRANSPORTATION

Caltrans

LAST REVISION 00-00-00 | DATE PLOTTED => 15-JUL-2009 | TIME PLOTTED => 00:00

RELATIVE BORDER SCALE IS IN INCHES 0 1 2 3

USERNAME => atruong

CU 08220

EA 0F1504

Dist	COUNTY	ROUTE	POST MILES TOTAL PROJECT	SHEET No.	TOTAL SHEETS
8	SBd	10	33.3/R36.9	XXX	XXX

REGISTERED CIVIL ENGINEER DATE

PLANS APPROVAL DATE

REGISTERED PROFESSIONAL ENGINEER No. Exp. CIVIL STATE OF CALIFORNIA

THE STATE OF CALIFORNIA OR ITS OFFICERS OR AGENTS SHALL NOT BE RESPONSIBLE FOR THE ACCURACY OR COMPLETENESS OF ELECTRONIC COPIES OF THIS PLAN SHEET.

SANBAG
1170 WEST 3RD STREET
2ND FLOOR
SAN BERNARDINO, CA 92410

CH2MHILL
2280 MARKET STREET
SUITE 200
RIVERSIDE, CA 92501

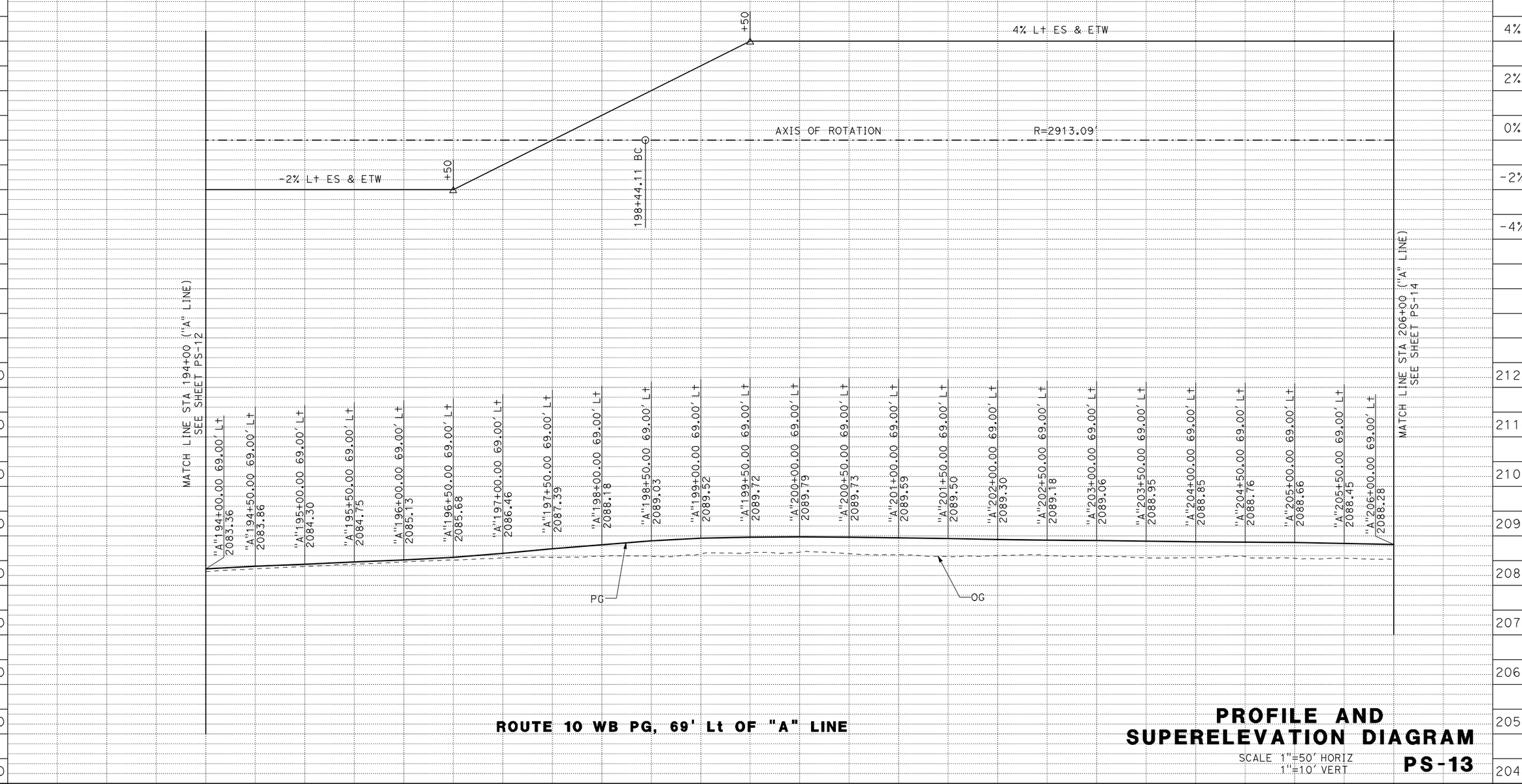

ROUTE 10 WB PG, 69' Lt OF "A" LINE

PROFILE AND SUPERELEVATION DIAGRAM

SCALE 1"=50' HORIZ
1"=10' VERT

PS-13

REVISED BY | DATE REVISED

CALCULATED-DESIGNED BY | CHECKED BY

CONSULTANT FUNCTIONAL SUPERVISOR: MARK HAGER

STATE OF CALIFORNIA - DEPARTMENT OF TRANSPORTATION

Caltrans

LAST REVISION 00-00-00 | DATE PLOTTED => 15-JUL-2009 | TIME PLOTTED => 00:00

RELATIVE BORDER SCALE IS IN INCHES 0 1 2 3

USERNAME => atruong

CU 08220

EA 0F1504

Dist	COUNTY	ROUTE	POST MILES TOTAL PROJECT	SHEET No.	TOTAL SHEETS
8	SBd	10	33.3/R36.9	XXX	XXX

REGISTERED CIVIL ENGINEER DATE

PLANS APPROVAL DATE

REGISTERED PROFESSIONAL ENGINEER No. Exp. CIVIL STATE OF CALIFORNIA

THE STATE OF CALIFORNIA OR ITS OFFICERS OR AGENTS SHALL NOT BE RESPONSIBLE FOR THE ACCURACY OR COMPLETENESS OF ELECTRONIC COPIES OF THIS PLAN SHEET.

SANBAG
1170 WEST 3RD STREET
2ND FLOOR
SAN BERNARDINO, CA 92410

CH2MHILL
2280 MARKET STREET
SUITE 200
RIVERSIDE, CA 92501

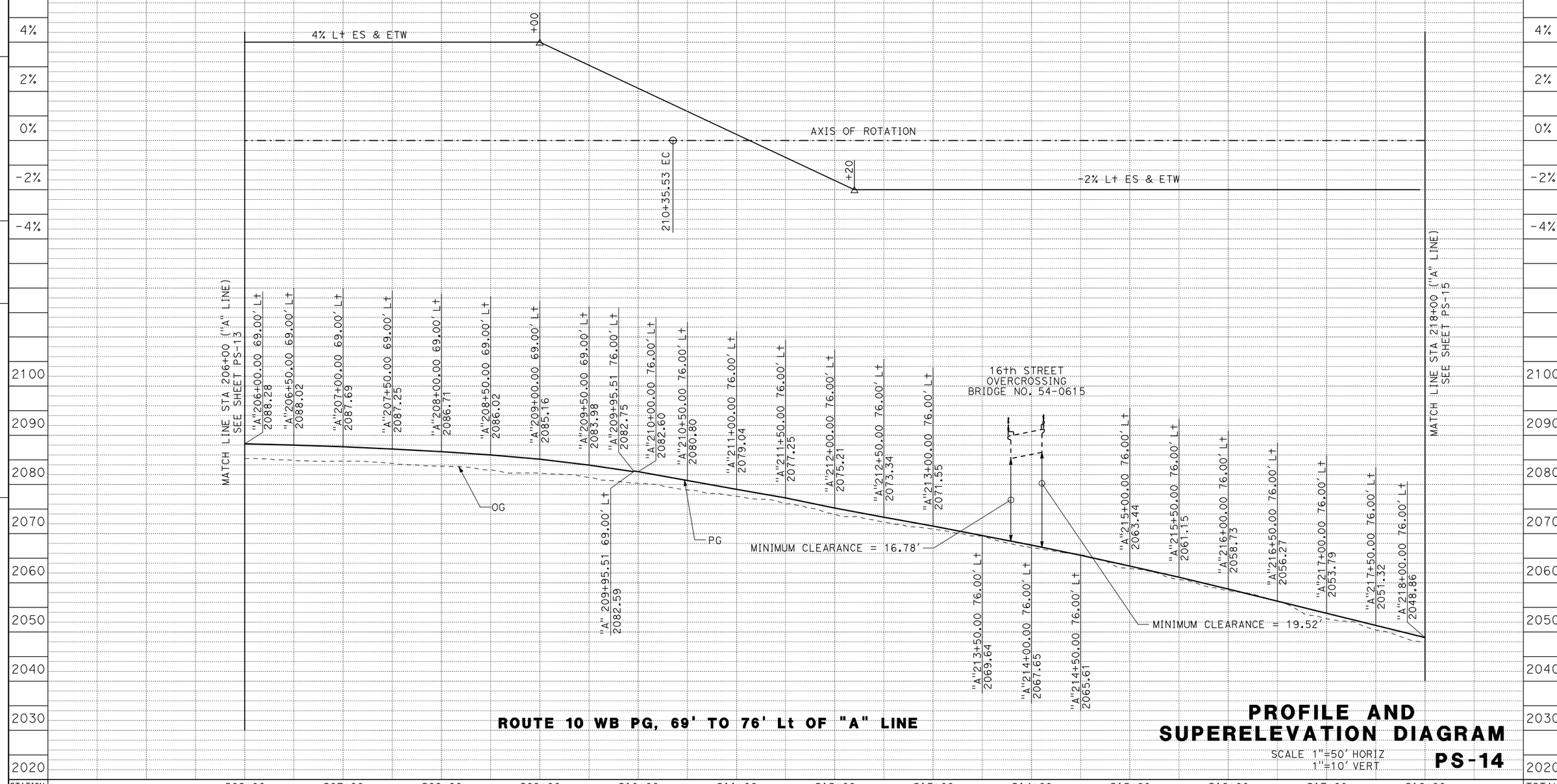

ROUTE 10 WB PG, 69' TO 76' Lt OF "A" LINE

PROFILE AND SUPERELEVATION DIAGRAM

SCALE 1"=50' HORIZ
1"=10' VERT

PS-14

STATE OF CALIFORNIA - DEPARTMENT OF TRANSPORTATION

Caltrans

CONSULTANT FUNCTIONAL SUPERVISOR: MARK HAGER

CALCULATED-DESIGNED BY

CHECKED BY

REVISED BY

DATE REVISED

LAST REVISION

DATE PLOTTED => 15-JUL-2009

RELATIVE BORDER SCALE IS IN INCHES 0 1 2 3

USERNAME => atruong

CU 08220

EA 0F1504

Dist	COUNTY	ROUTE	POST MILES TOTAL PROJECT	SHEET No.	TOTAL SHEETS
8	SBd	10	33.3/R36.9	XXX	XXX

REGISTERED CIVIL ENGINEER DATE

PLANS APPROVAL DATE

REGISTERED PROFESSIONAL ENGINEER No. Exp. CIVIL STATE OF CALIFORNIA

THE STATE OF CALIFORNIA OR ITS OFFICERS OR AGENTS SHALL NOT BE RESPONSIBLE FOR THE ACCURACY OR COMPLETENESS OF ELECTRONIC COPIES OF THIS PLAN SHEET.

SANBAG
1170 WEST 3RD STREET
2ND FLOOR
SAN BERNARDINO, CA 92410

CH2MHILL
2280 MARKET STREET
SUITE 200
RIVERSIDE, CA 92501

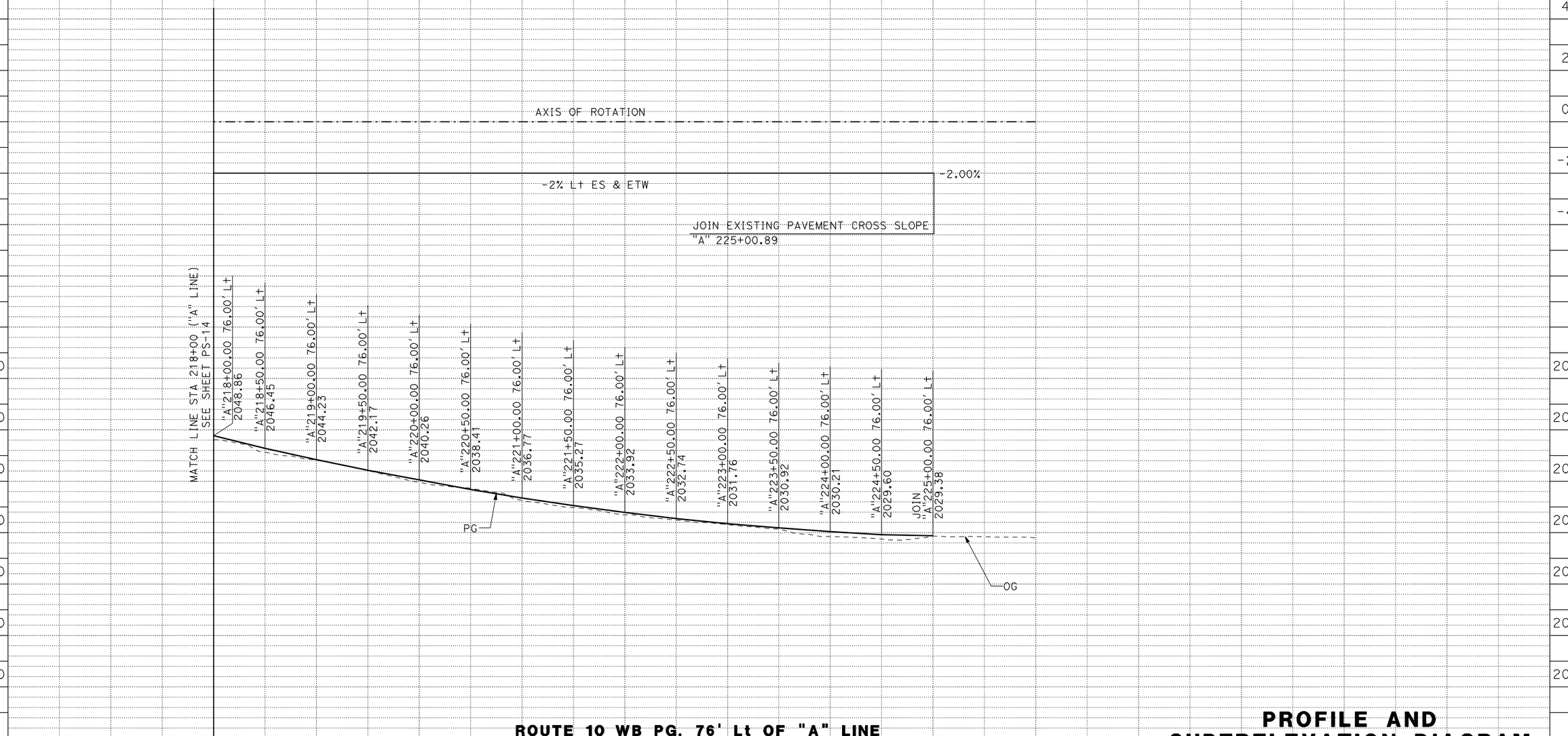

ROUTE 10 WB PG, 76' Lt OF "A" LINE

PROFILE AND SUPERELEVATION DIAGRAM

SCALE 1"=50' HORIZ
1"=10' VERT

PS-15

STATION	218+00	219+00	220+00	221+00	222+00	223+00	224+00	225+00	226+00	TOTAL
CY Exc	3,221									
CY Emb	1,185									

STATE OF CALIFORNIA - DEPARTMENT OF TRANSPORTATION

Caltrans

CONSULTANT FUNCTIONAL SUPERVISOR: MARK HAGER

CALCULATED-DESIGNED BY | CHECKED BY

REVISED BY | DATE REVISED

LAST REVISION 00-00-00 | DATE PLOTTED => 15-JUL-2009 | TIME PLOTTED => 00:00

RELATIVE BORDER SCALE IS IN INCHES 0 1 2 3

USERNAME => dtruong

CU 08220

EA 0F1504

Dist	COUNTY	ROUTE	POST MILES TOTAL PROJECT	SHEET No.	TOTAL SHEETS
8	SBd	10	33.3/R36.9	XXX	XXX

REGISTERED CIVIL ENGINEER DATE

PLANS APPROVAL DATE

REGISTERED PROFESSIONAL ENGINEER No. Exp. CIVIL STATE OF CALIFORNIA

THE STATE OF CALIFORNIA OR ITS OFFICERS OR AGENTS SHALL NOT BE RESPONSIBLE FOR THE ACCURACY OR COMPLETENESS OF ELECTRONIC COPIES OF THIS PLAN SHEET.

SANBAG
1170 WEST 3RD STREET
2ND FLOOR
SAN BERNARDINO, CA 92410

CH2MHILL
2280 MARKET STREET
SUITE 200
RIVERSIDE, CA 92501

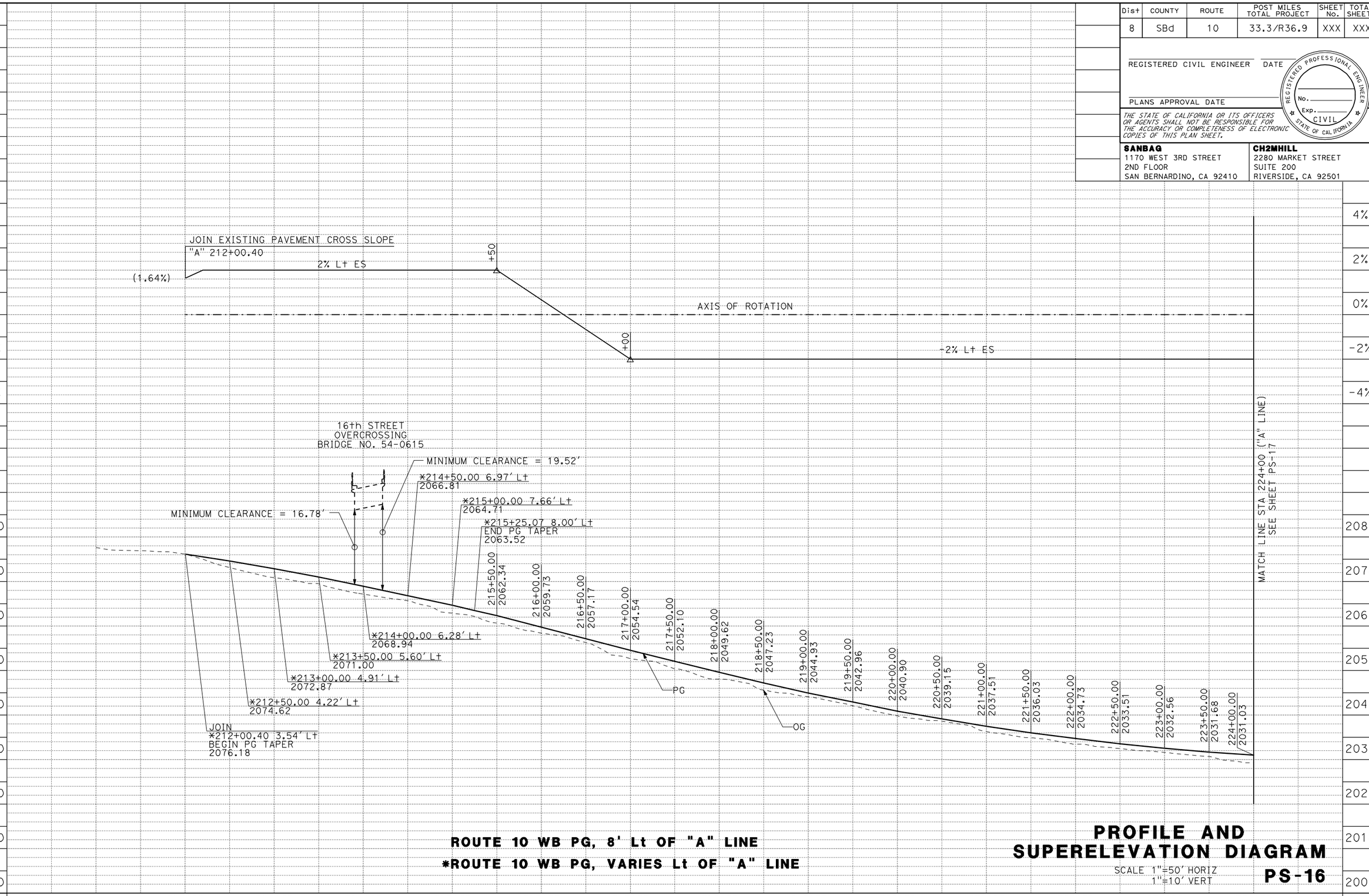

ROUTE 10 WB PG, 8' Lt OF "A" LINE

***ROUTE 10 WB PG, VARIES Lt OF "A" LINE**

PROFILE AND SUPERELEVATION DIAGRAM

SCALE 1"=50' HORIZ
1"=10' VERT

PS-16

STATE OF CALIFORNIA - DEPARTMENT OF TRANSPORTATION

Caltrans

CONSULTANT FUNCTIONAL SUPERVISOR: MARK HAGER

CALCULATED-DESIGNED BY

CHECKED BY

REVISED BY

DATE REVISED

LAST REVISION 00-00-00

DATE PLOTTED => 15-JUL-2009

RELATIVE BORDER SCALE IS IN INCHES 0 1 2 3

USERNAME => atruong

CU 08220

EA 0F1504

Dist	COUNTY	ROUTE	POST MILES TOTAL PROJECT	SHEET No.	TOTAL SHEETS
8	SBd	10	33.3/R36.9	XXX	XXX

REGISTERED CIVIL ENGINEER DATE

PLANS APPROVAL DATE

REGISTERED PROFESSIONAL ENGINEER No. Exp. CIVIL STATE OF CALIFORNIA

THE STATE OF CALIFORNIA OR ITS OFFICERS OR AGENTS SHALL NOT BE RESPONSIBLE FOR THE ACCURACY OR COMPLETENESS OF ELECTRONIC COPIES OF THIS PLAN SHEET.

SANBAG
1170 WEST 3RD STREET
2ND FLOOR
SAN BERNARDINO, CA 92410

CH2MHILL
2280 MARKET STREET
SUITE 200
RIVERSIDE, CA 92501

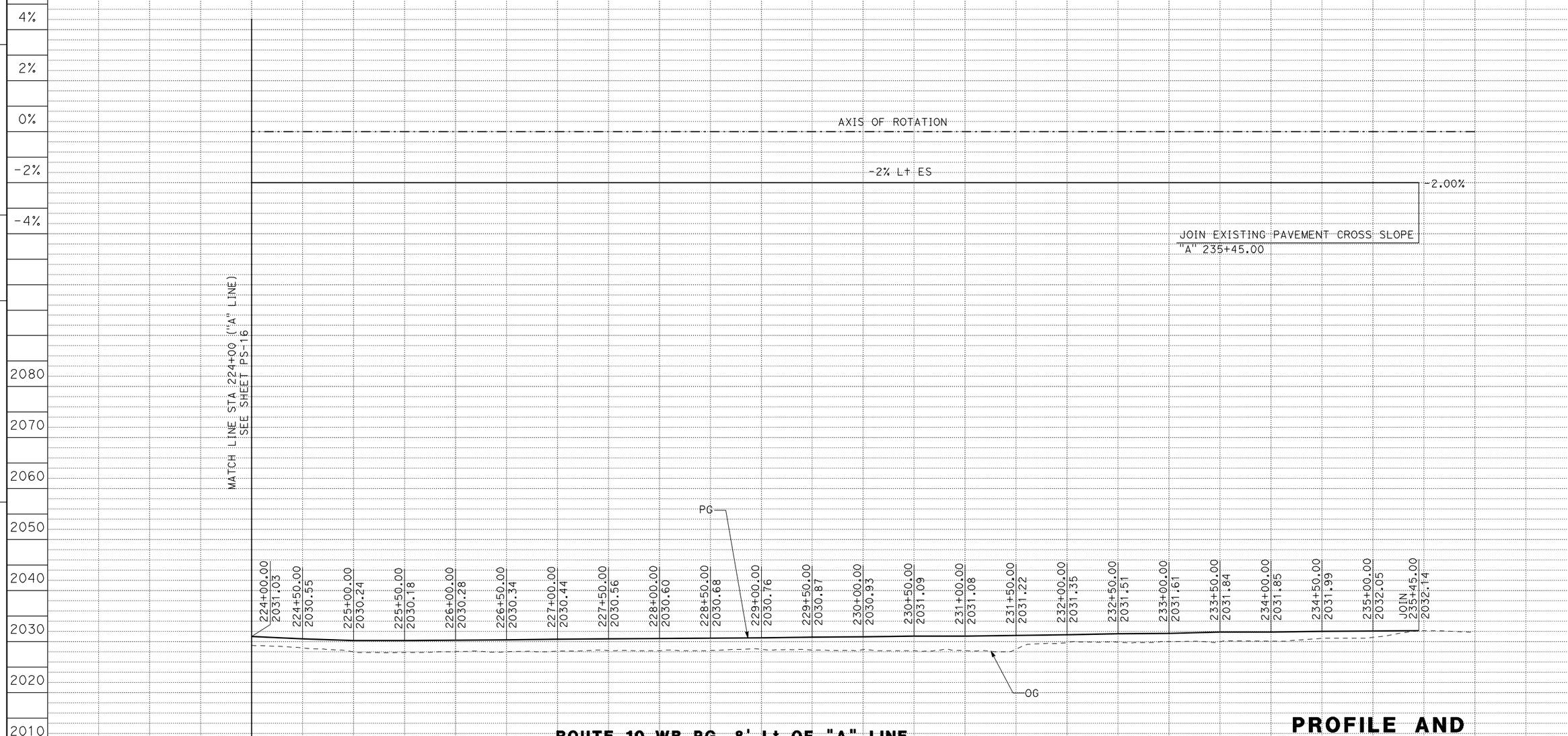

ROUTE 10 WB PG, 8' Lt OF "A" LINE

PROFILE AND SUPERELEVATION DIAGRAM

SCALE 1"=50' HORIZ
1"=10' VERT

PS-17

STATION	224+00	225+00	226+00	227+00	228+00	229+00	230+00	231+00	232+00	233+00	234+00	235+00	236+00	TOTAL
CY Exc	2,344													
CY Emb	506													

STATE OF CALIFORNIA - DEPARTMENT OF TRANSPORTATION

Caltrans

CONSULTANT FUNCTIONAL SUPERVISOR: MARK HAGER

CALCULATED-DESIGNED BY

CHECKED BY

REVISED BY

DATE REVISED

LAST REVISION DATE PLOTTED => 15-JUL-2009

RELATIVE BORDER SCALE IS IN INCHES 0 1 2 3

USERNAME => atruong

CU 08220

EA 0F1504

Dist	COUNTY	ROUTE	POST MILES TOTAL PROJECT	SHEET No.	TOTAL SHEETS
8	SBd	10	33.3/R36.9	XXX	XXX

REGISTERED CIVIL ENGINEER DATE

PLANS APPROVAL DATE

REGISTERED PROFESSIONAL ENGINEER No. Exp. CIVIL STATE OF CALIFORNIA

THE STATE OF CALIFORNIA OR ITS OFFICERS OR AGENTS SHALL NOT BE RESPONSIBLE FOR THE ACCURACY OR COMPLETENESS OF ELECTRONIC COPIES OF THIS PLAN SHEET.

SANBAG
1170 WEST 3RD STREET
2ND FLOOR
SAN BERNARDINO, CA 92410

CH2MHILL
2280 MARKET STREET
SUITE 200
RIVERSIDE, CA 92501

NOTES:

1. AREA SHALL BE GRADED TO ACCOMODATE PULLOUTS (MAXIMUM 5% SLOPE)

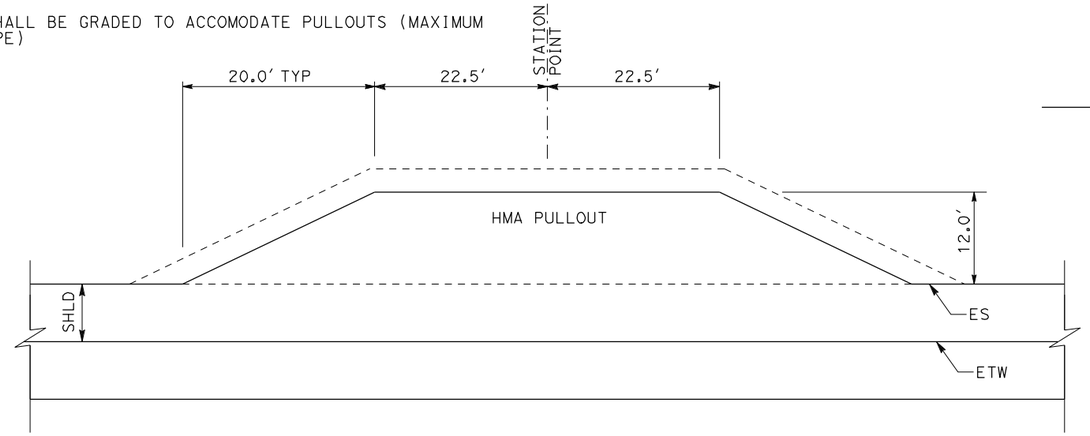

TYPICAL MAINTENANCE VEHICLE PULLOUT

ROUTE 10 WB "A" 161+80.000
ROUTE 10 WB "A" 167+22.500

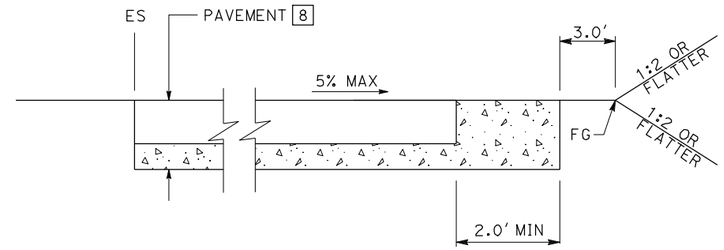

TYPICAL SECTION

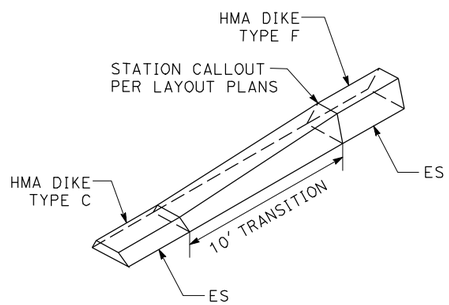

HMA DIKE TRANSITION, HMA DIKE (TYPE F) TO HMA DIKE (TYPE C)

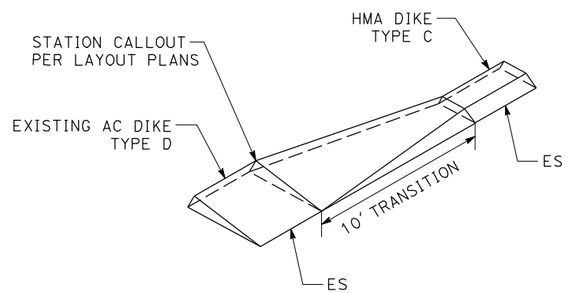

HMA DIKE TRANSITION, HMA DIKE (TYPE C) TO EXISTING AC DIKE (TYPE D)

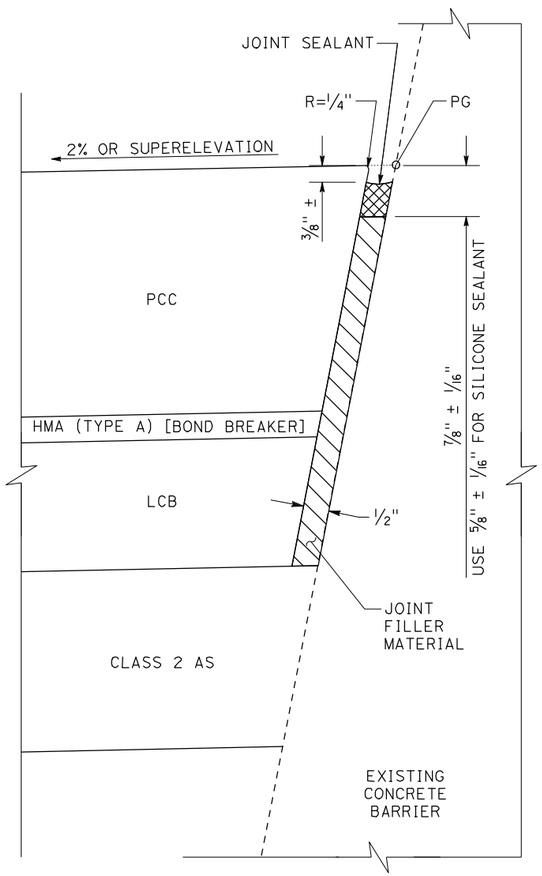

ISOLATION JOINT BETWEEN EXISTING CONCRETE BARRIER AND NEW PCCP DETAIL

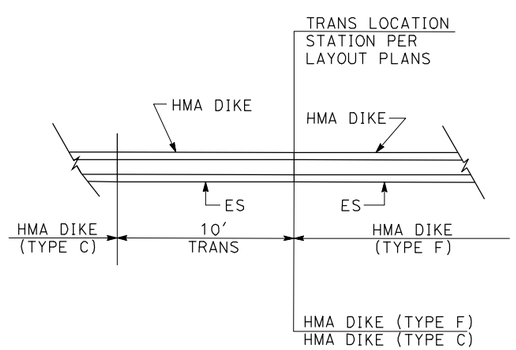

HMA DIKE TRANSITION DETAIL

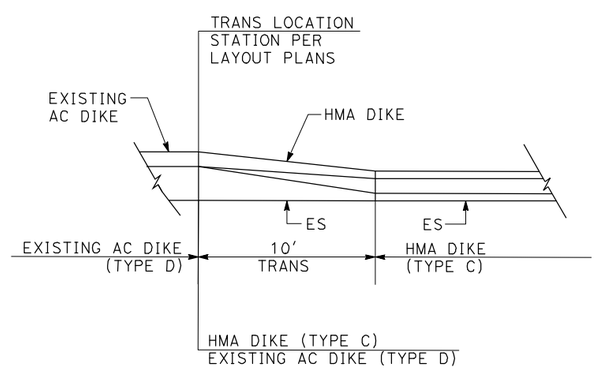

HMA DIKE TRANSITION DETAIL

CONSTRUCTION DETAILS

NO SCALE

C-1

REVISED BY | DATE REVISED

CALCULATED-DESIGNED BY | CHECKED BY

CONSULTANT FUNCTIONAL SUPERVISOR: MARK HAGER

STATE OF CALIFORNIA - DEPARTMENT OF TRANSPORTATION

Caltrans

LAST REVISION 00-00-00 | DATE PLOTTED => 15-JUL-2009

RELATIVE BORDER SCALE IS IN INCHES 0 1 2 3

USERNAME => gtruong

CU 08220 | EA 0F1504

Dist	COUNTY	ROUTE	POST MILES TOTAL PROJECT	SHEET No.	TOTAL SHEETS
8	SBd	10	33.3/R36.9	XXX	XXX

REGISTERED CIVIL ENGINEER DATE

PLANS APPROVAL DATE

REGISTERED PROFESSIONAL ENGINEER No. Exp. CIVIL STATE OF CALIFORNIA

THE STATE OF CALIFORNIA OR ITS OFFICERS OR AGENTS SHALL NOT BE RESPONSIBLE FOR THE ACCURACY OR COMPLETENESS OF ELECTRONIC COPIES OF THIS PLAN SHEET.

SANBAG
1170 WEST 3RD STREET
2ND FLOOR
SAN BERNARDINO, CA 92410

CH2MHILL
2280 MARKET STREET
SUITE 200
RIVERSIDE, CA 92501

LEGEND THIS SHEET:

- ● 69.00′ Lt OF "A" LINE
- ■ 4.00′ Rt OF "Y1" LINE
- ▲ 22.00′ Lt OF "Y1" LINE

CURVE DATA

No.	R	Δ	T	L
7	1999.83′	18°16′06"	321.55′	637.63′
11	3280.83′	4°44′13"	135.70′	271.24′
12	1639.63′	3°52′52"	55.56′	111.07′

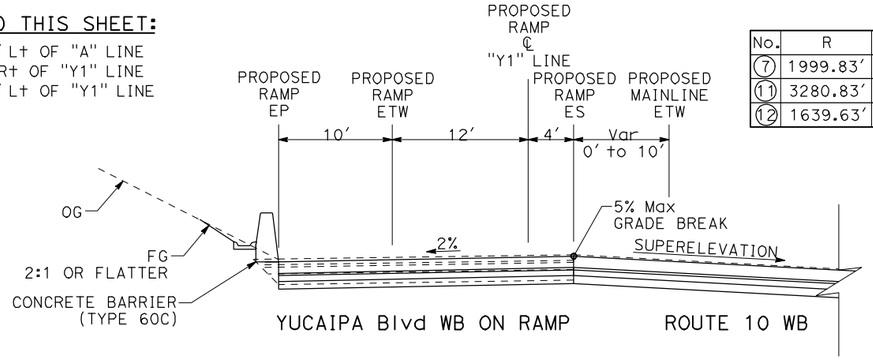

SECTION A-A

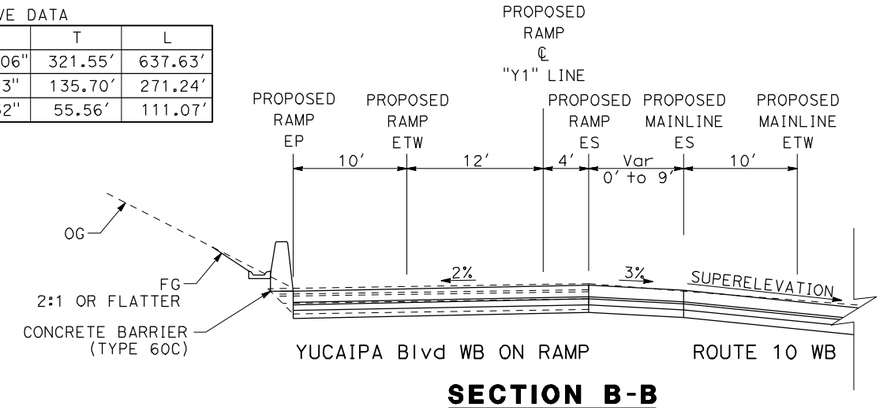

SECTION B-B

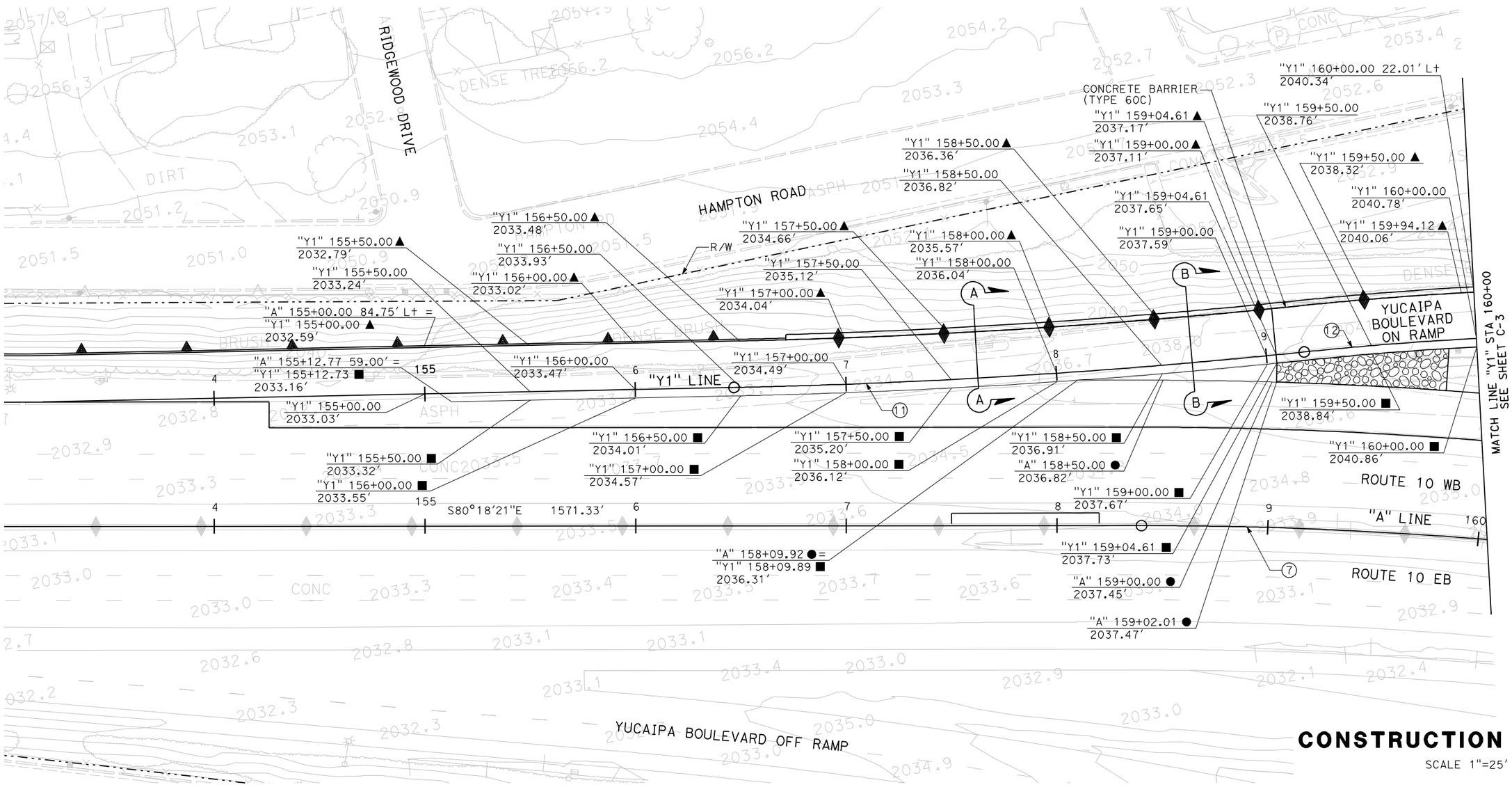

CONSTRUCTION DETAILS

SCALE 1"=25′

C-2

STATE OF CALIFORNIA - DEPARTMENT OF TRANSPORTATION

Caltrans

CONSULTANT FUNCTIONAL SUPERVISOR: MARK HAGER

CALCULATED-DESIGNED BY

CHECKED BY

REVISED BY

DATE REVISED

LAST REVISION

DATE PLOTTED => 15-JUL-2009

RELATIVE BORDER SCALE IS IN INCHES 0 1 2 3

USERNAME => atruong

DGN FILE => 0F1504ga002.dgn

CU 08220

EA 0F1504

Dist	COUNTY	ROUTE	POST MILES TOTAL PROJECT	SHEET No.	TOTAL SHEETS
8	SBd	10	33.3/R36.9	XXX	XXX

REGISTERED CIVIL ENGINEER DATE

PLANS APPROVAL DATE

REGISTERED PROFESSIONAL ENGINEER No. Exp. CIVIL STATE OF CALIFORNIA

THE STATE OF CALIFORNIA OR ITS OFFICERS OR AGENTS SHALL NOT BE RESPONSIBLE FOR THE ACCURACY OR COMPLETENESS OF ELECTRONIC COPIES OF THIS PLAN SHEET.

SANBAG
1170 WEST 3RD STREET
2ND FLOOR
SAN BERNARDINO, CA 92410

CH2MHILL
2280 MARKET STREET
SUITE 200
RIVERSIDE, CA 92501

LEGEND THIS SHEET:

■ 4.00′ R+ OF "Y1" LINE

CURVE DATA

No.	R	Δ	T	L
7	1999.83′	18°16′06″	321.55′	637.63′
11	3280.83′	4°44′13″	135.70′	271.24′
12	1639.63′	3°52′52″	55.56′	111.07′

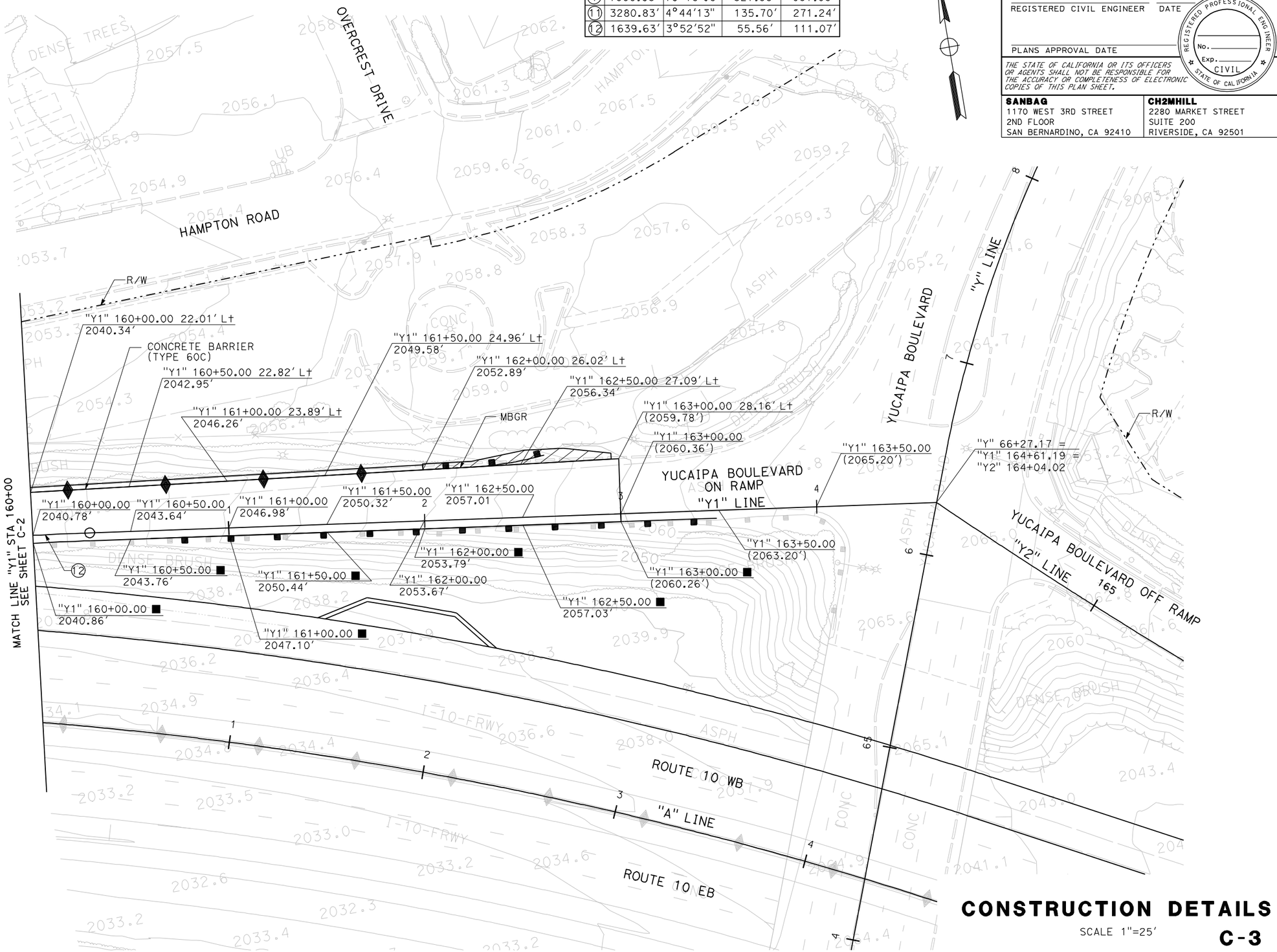

CONSTRUCTION DETAILS

SCALE 1"=25′

C-3

REVISED BY	DATE REVISED

CALCULATED-DESIGNED BY

CHECKED BY

CONSULTANT FUNCTIONAL SUPERVISOR: MARK HAGER

STATE OF CALIFORNIA - DEPARTMENT OF TRANSPORTATION

Caltrans

LAST REVISION 00-00-00 DATE PLOTTED => 15-JUL-2009

RELATIVE BORDER SCALE IS IN INCHES 0 1 2 3

USERNAME => dtruong

CU 08220

EA 0F1504

Dist	COUNTY	ROUTE	POST MILES TOTAL PROJECT	SHEET No.	TOTAL SHEETS
8	SBd	10	33.3/R36.9	XXX	XXX

REGISTERED CIVIL ENGINEER DATE

PLANS APPROVAL DATE

REGISTERED PROFESSIONAL ENGINEER No. Exp. CIVIL STATE OF CALIFORNIA

THE STATE OF CALIFORNIA OR ITS OFFICERS OR AGENTS SHALL NOT BE RESPONSIBLE FOR THE ACCURACY OR COMPLETENESS OF ELECTRONIC COPIES OF THIS PLAN SHEET.

SANBAG
1170 WEST 3RD STREET
2ND FLOOR
SAN BERNARDINO, CA 92410

CH2MHILL
2280 MARKET STREET
SUITE 200
RIVERSIDE, CA 92501

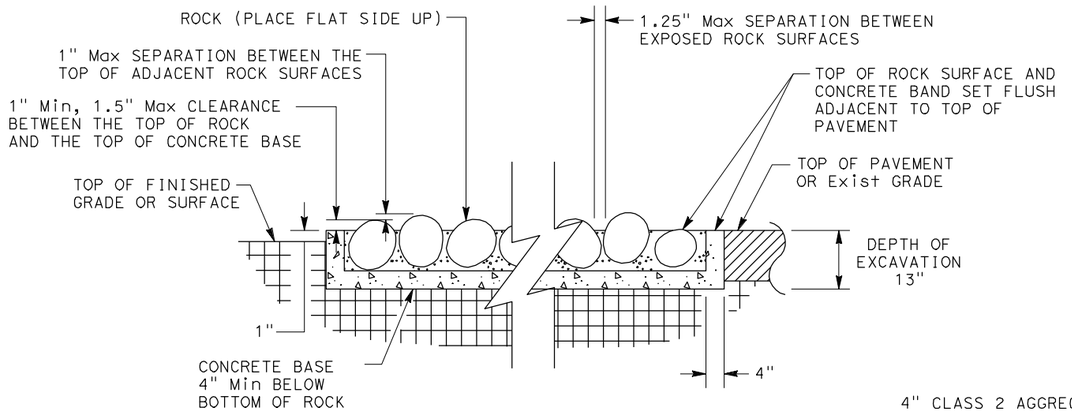

SECTION

ROCK BLANKET

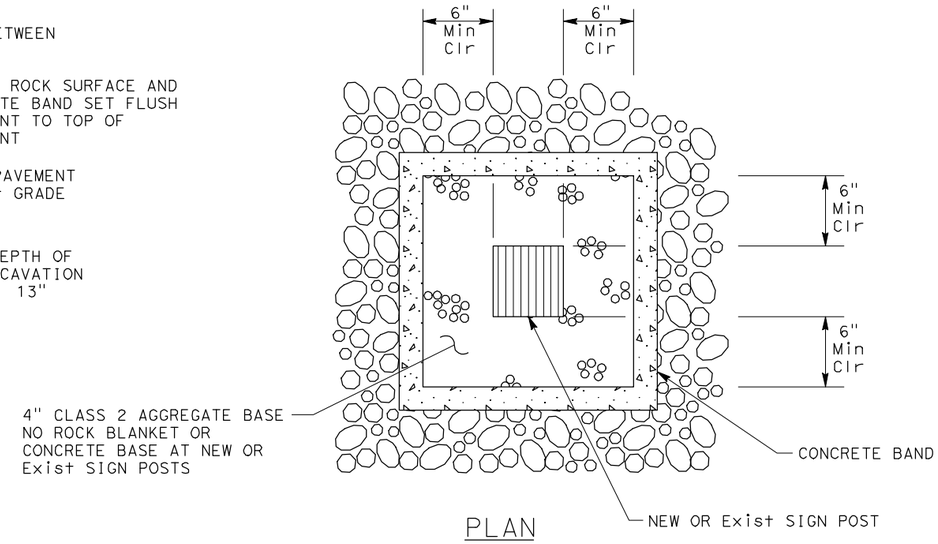

PLAN

ROCK BLANKET WITH POST

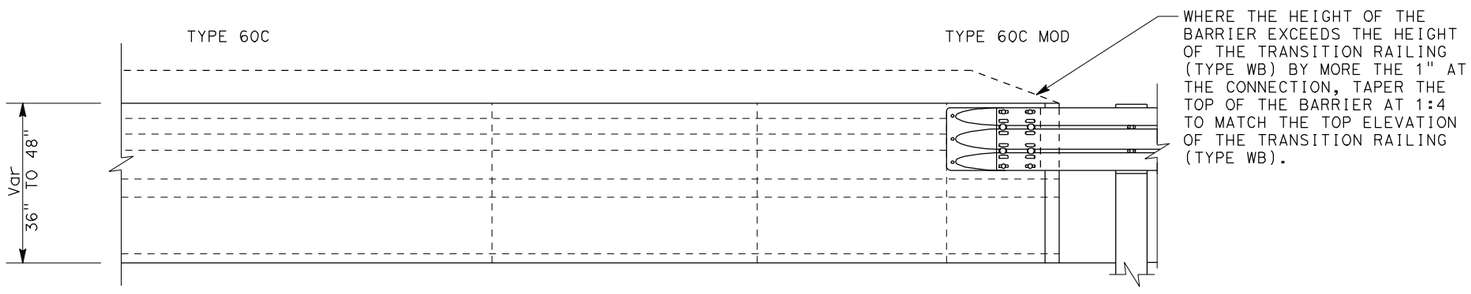

ELEVATION

TRANSITION CONCRETE BARRIER TYPE 60C TO CONCRETE BARRIER TYPE 60C MOD

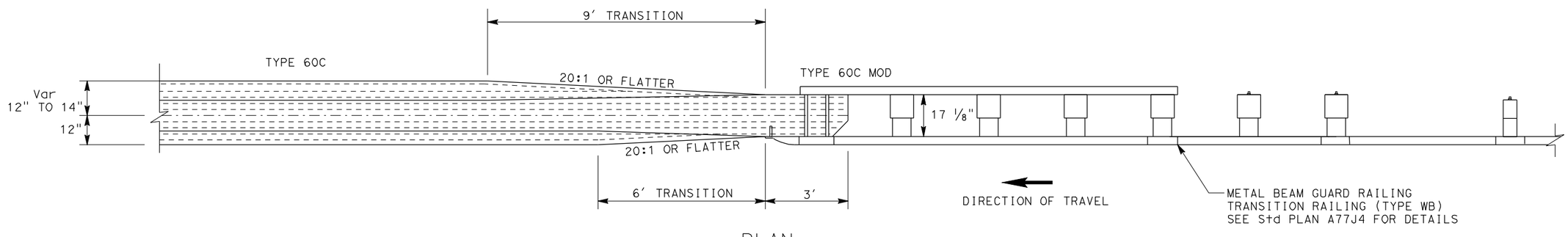

PLAN

TRANSITION CONCRETE BARRIER TYPE 60C TO CONCRETE BARRIER TYPE 60C MOD

CONSTRUCTION DETAILS

NO SCALE

C-4

REVISED BY | DATE REVISED

CALCULATED-DESIGNED BY | CHECKED BY

CONSULTANT FUNCTIONAL SUPERVISOR: MARK HAGER

STATE OF CALIFORNIA - DEPARTMENT OF TRANSPORTATION

Caltrans

LAST REVISION | DATE PLOTTED => 15-JUL-2009

RELATIVE BORDER SCALE IS IN INCHES 0 1 2 3

USERNAME => atruong

CU 08220

EA 0F1504

Dist	COUNTY	ROUTE	POST MILES TOTAL PROJECT	SHEET No.	TOTAL SHEETS
8	SBd	10	33.3/R36.9	XXX	XXX

REGISTERED CIVIL ENGINEER DATE

PLANS APPROVAL DATE

REGISTERED PROFESSIONAL ENGINEER No. Exp. CIVIL STATE OF CALIFORNIA

THE STATE OF CALIFORNIA OR ITS OFFICERS OR AGENTS SHALL NOT BE RESPONSIBLE FOR THE ACCURACY OR COMPLETENESS OF ELECTRONIC COPIES OF THIS PLAN SHEET.

SANBAG
1170 WEST 3RD STREET
2ND FLOOR
SAN BERNARDINO, CA 92410

CH2MHILL
2280 MARKET STREET
SUITE 200
RIVERSIDE, CA 92501

NOTE:

1. LONGITUDINAL TRANSITION OF GRIND EXISTING CONCRETE PAVEMENT WILL BE DETEREMINED BY THE RESIDENT ENGINEER BASED ON FIELD CONDITIONS.

LEGEND:

GRIND EXISTING CONCRETE PAVEMENT

CURVE DATA

No.	R	Δ	T	L
1	3199.23′	33°52′55″	974.50′	1891.87′
2	7943.34′	18°26′29″	1289.48′	2556.66′
3	7999.32′	09°57′59″	697.48′	1391.44′
4	9999.15′	03°40′41″	321.05′	641.88′

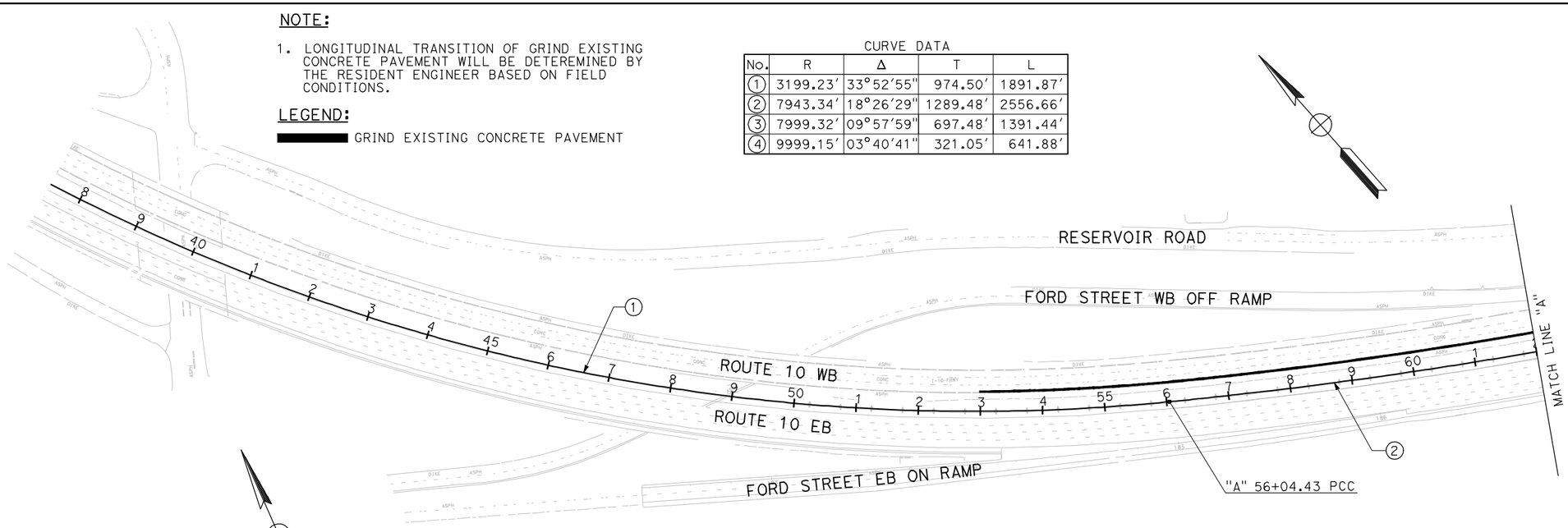

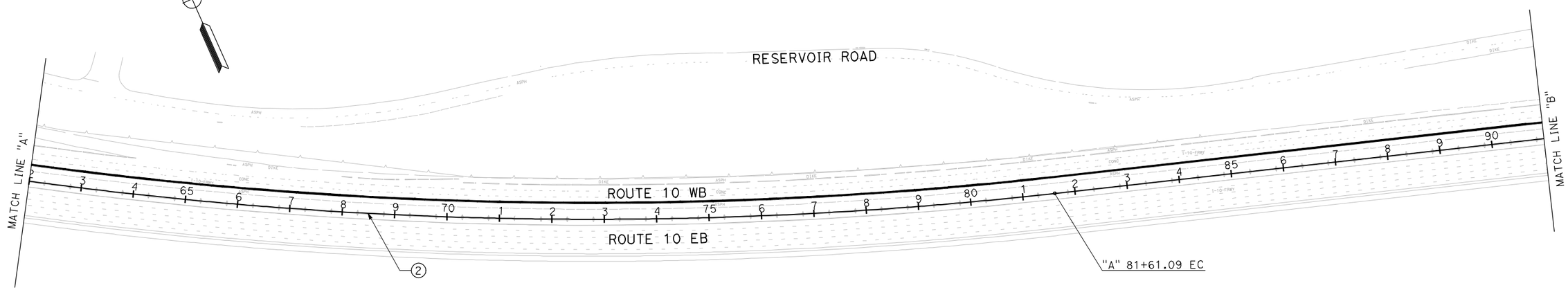

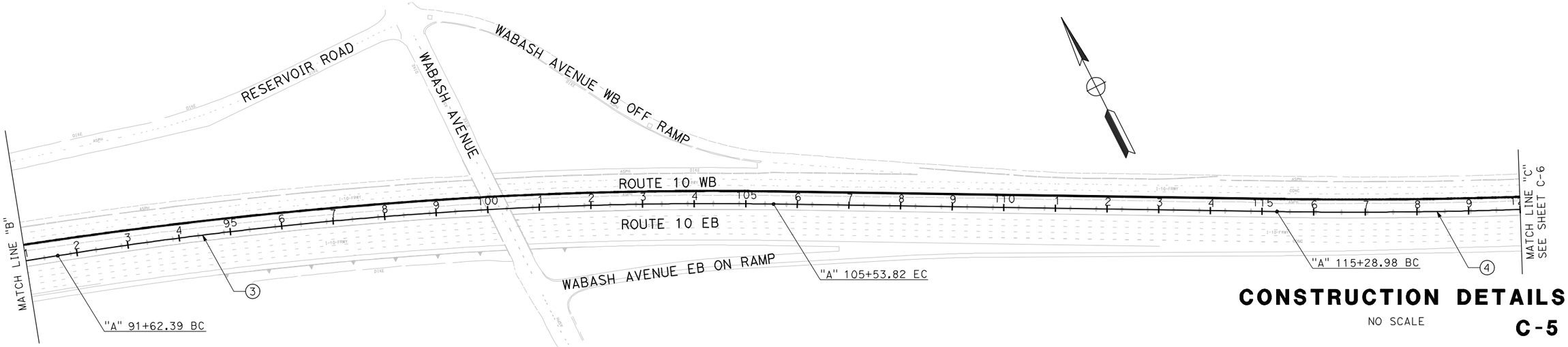

CONSTRUCTION DETAILS

NO SCALE

C-5

STATE OF CALIFORNIA - DEPARTMENT OF TRANSPORTATION

Caltrans

CONSULTANT FUNCTIONAL SUPERVISOR: MARK HAGER

CALCULATED-DESIGNED BY

CHECKED BY

REVISED BY

DATE REVISED

LAST REVISION 00-00-00 DATE PLOTTED => 15-JUL-2009

RELATIVE BORDER SCALE IS IN INCHES 0 1 2 3

USERNAME => dtruong

CU 08220

EA 0F1504

Dist	COUNTY	ROUTE	POST MILES TOTAL PROJECT	SHEET No.	TOTAL SHEETS
8	SBd	10	33.3/R36.9	XXX	XXX

REGISTERED CIVIL ENGINEER DATE

PLANS APPROVAL DATE

REGISTERED PROFESSIONAL ENGINEER No. Exp. CIVIL STATE OF CALIFORNIA

THE STATE OF CALIFORNIA OR ITS OFFICERS OR AGENTS SHALL NOT BE RESPONSIBLE FOR THE ACCURACY OR COMPLETENESS OF ELECTRONIC COPIES OF THIS PLAN SHEET.

SANBAG
1170 WEST 3RD STREET
2ND FLOOR
SAN BERNARDINO, CA 92410

CH2MHILL
2280 MARKET STREET
SUITE 200
RIVERSIDE, CA 92501

NOTE:

1. LONGITUDINAL TRANSITION OF GRIND EXISTING CONCRETE PAVEMENT WILL BE DETEREMINED BY THE RESIDENT ENGINEER BASED ON FIELD CONDITIONS.

LEGEND:

GRIND EXISTING CONCRETE PAVEMENT

CURVE DATA

No.	R	Δ	T	L
4	9999.15′	03°40′41″	321.05′	641.88′
5	3799.67′	07°44′39″	257.18′	513.57′
6	1999.83′	21°49′42″	385.62′	761.88′
7	1999.83′	18°16′06″	321.55′	637.63′
8	2999.55′	07°55′46″	207.89′	415.12′
9	7963.42′	06°56′10″	482.60′	964.02′

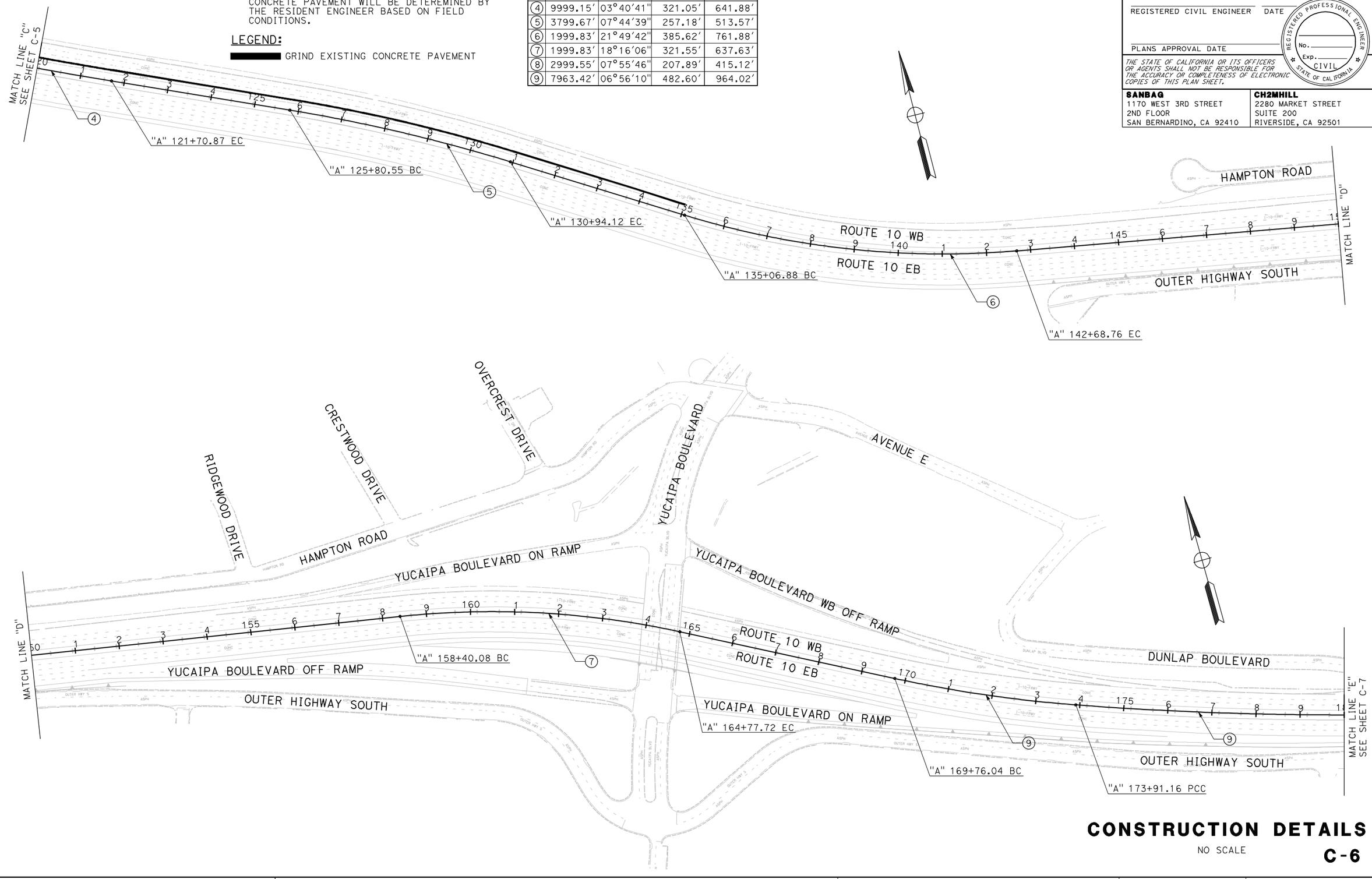

CONSTRUCTION DETAILS

NO SCALE

C-6

REVISED BY	DATE REVISED

CALCULATED-DESIGNED BY	CHECKED BY

CONSULTANT FUNCTIONAL SUPERVISOR: MARK HAGER

STATE OF CALIFORNIA - DEPARTMENT OF TRANSPORTATION

Caltrans

LAST REVISION 00-00-00 | DATE PLOTTED => 15-JUL-2009

RELATIVE BORDER SCALE IS IN INCHES 0 1 2 3

USERNAME => atruong

CU 08220

EA 0F1504

Dist	COUNTY	ROUTE	POST MILES TOTAL PROJECT	SHEET No.	TOTAL SHEETS
8	SBd	10	33.3/R36.9	XXX	XXX

REGISTERED CIVIL ENGINEER DATE

PLANS APPROVAL DATE

REGISTERED PROFESSIONAL ENGINEER No. Exp. CIVIL STATE OF CALIFORNIA

THE STATE OF CALIFORNIA OR ITS OFFICERS OR AGENTS SHALL NOT BE RESPONSIBLE FOR THE ACCURACY OR COMPLETENESS OF ELECTRONIC COPIES OF THIS PLAN SHEET.

SANBAG
1170 WEST 3RD STREET
2ND FLOOR
SAN BERNARDINO, CA 92410

CH2MHILL
2280 MARKET STREET
SUITE 200
RIVERSIDE, CA 92501

NOTE:

1. LONGITUDINAL TRANSITION OF GRIND EXISTING CONCRETE PAVEMENT WILL BE DETEREMINED BY THE RESIDENT ENGINEER BASED ON FIELD CONDITIONS.

LEGEND:

GRIND EXISTING CONCRETE PAVEMENT

CURVE DATA

No.	R	Δ	T	L
9	7963.42′	06°56′10″	482.60′	964.02′
10	2913.09′	23°26′00″	604.15′	1191.42′

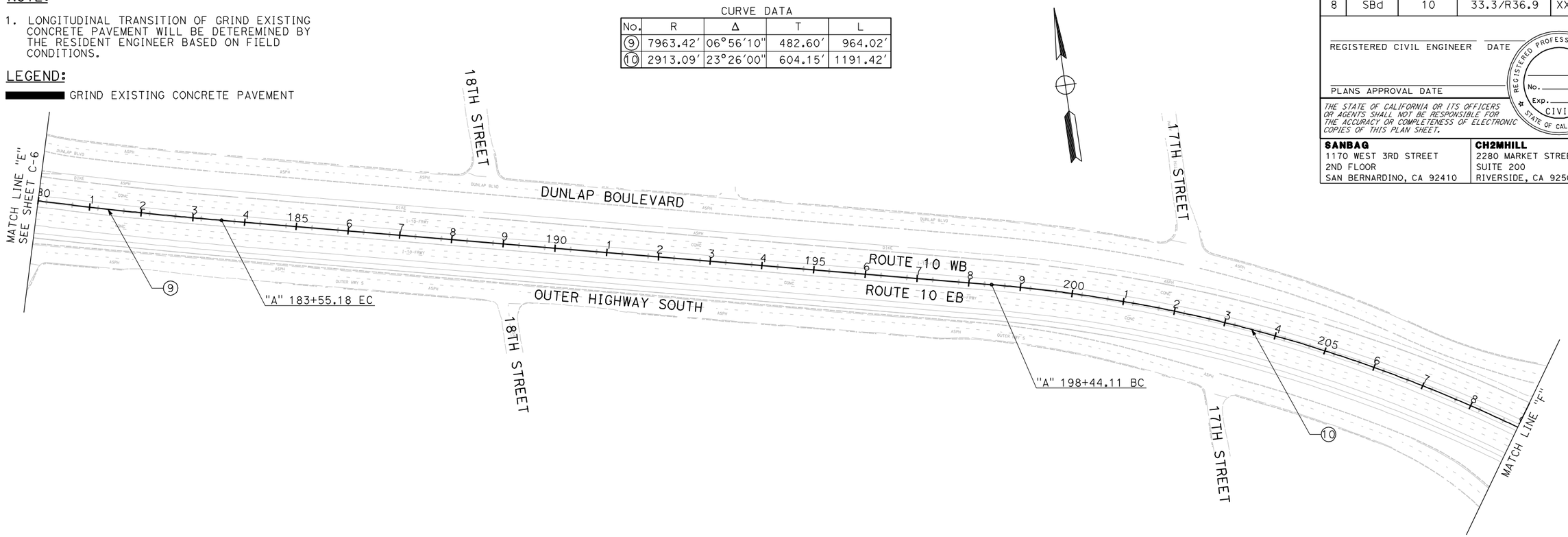

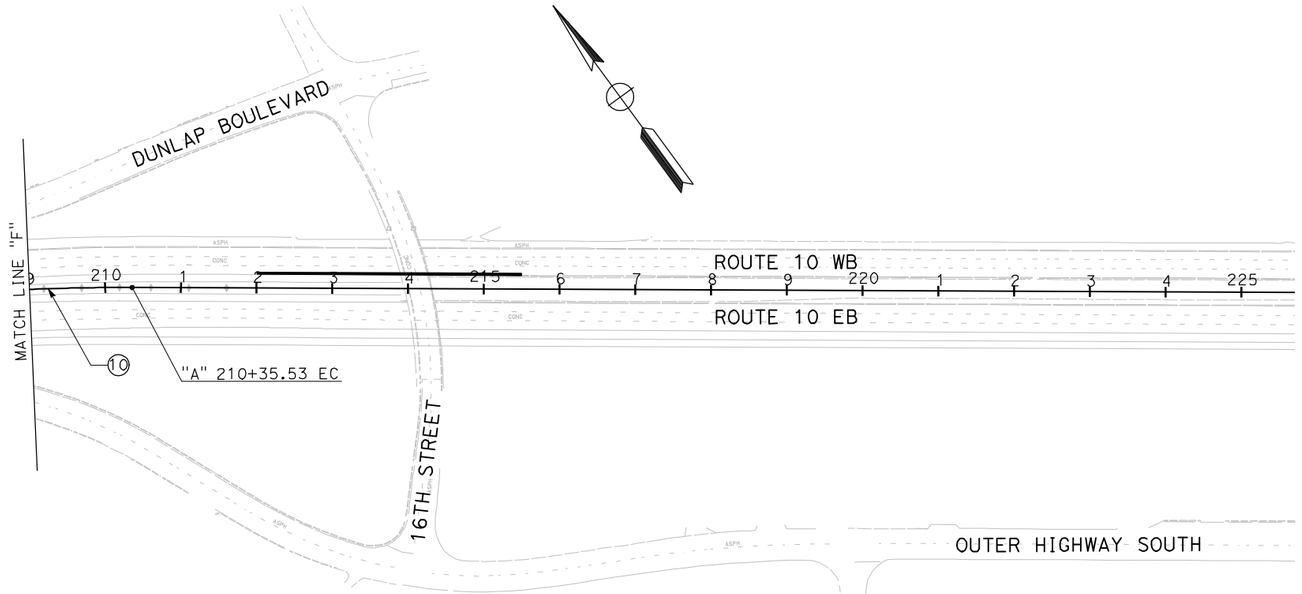

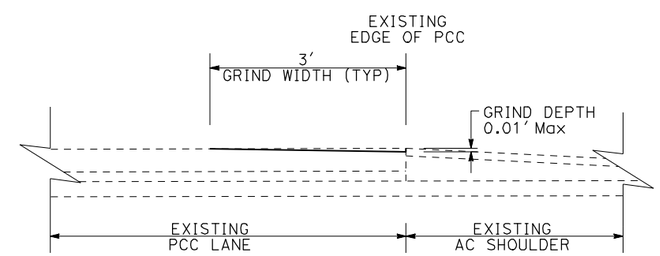

GRIND EXISTING CONCRETE PAVEMENT DETAIL

LOCATION OF GRIND
EXISTING CONCRETE PAVEMENT

STATION	OFFSET
"A" 52+98.94 TO "A" 135+01.09	WB R+ INSIDE ETW
"A" 212+00.40 TO "A" 215+50.00	WB R+ INSIDE ETW

CONSTRUCTION DETAILS

NO SCALE

C-7

STATE OF CALIFORNIA - DEPARTMENT OF TRANSPORTATION

Caltrans

CONSULTANT FUNCTIONAL SUPERVISOR: MARK HAGER

CALCULATED-DESIGNED BY | CHECKED BY

REVISED BY | DATE REVISED

LAST REVISION | DATE PLOTTED => 15-JUL-2009

RELATIVE BORDER SCALE IS IN INCHES 0 1 2 3

USERNAME => atruong

CU 08220 | EA 0F1504

Dist	COUNTY	ROUTE	POST MILES TOTAL PROJECT	SHEET No.	TOTAL SHEETS
8	SBd	10	33.3/R36.9	XXX	XXX

REGISTERED CIVIL ENGINEER DATE

PLANS APPROVAL DATE

REGISTERED PROFESSIONAL ENGINEER No. Exp. CIVIL STATE OF CALIFORNIA

THE STATE OF CALIFORNIA OR ITS OFFICERS OR AGENTS SHALL NOT BE RESPONSIBLE FOR THE ACCURACY OR COMPLETENESS OF ELECTRONIC COPIES OF THIS PLAN SHEET.

SANBAG
1170 WEST 3RD STREET
2ND FLOOR
SAN BERNARDINO, CA 92410

CH2MHILL
2280 MARKET STREET
SUITE 200
RIVERSIDE, CA 92501

NOTE:

1. STATION, OFFSET, AND ELEVATION REPRESENT THE TOP, BACK OF GUTTER.

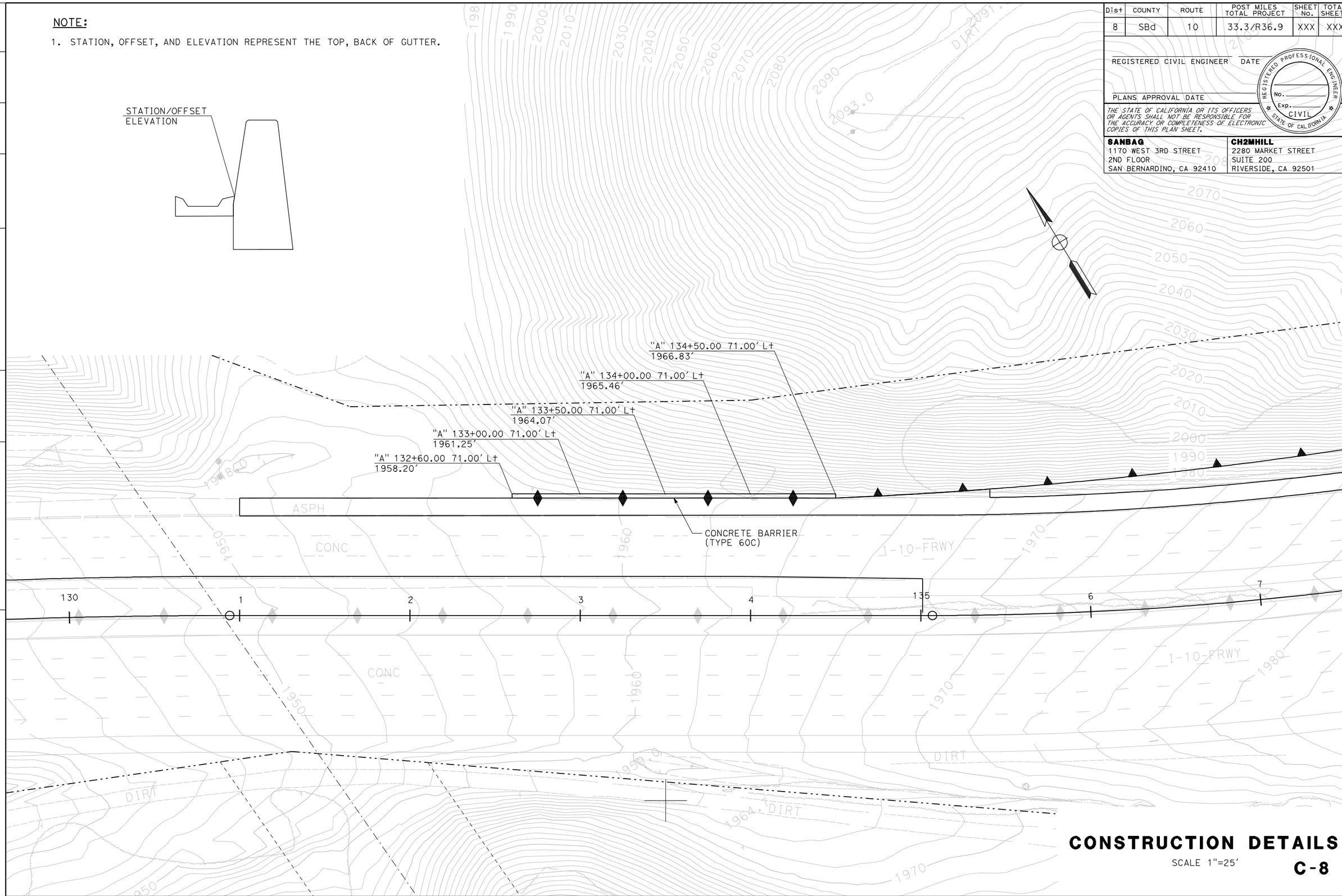

CONSTRUCTION DETAILS

SCALE 1"=25'

C-8

REVISED BY	DATE REVISED

CALCULATED-DESIGNED BY

CHECKED BY

CONSULTANT FUNCTIONAL SUPERVISOR

MARK HAGER

STATE OF CALIFORNIA - DEPARTMENT OF TRANSPORTATION

Caltrans

LAST REVISION DATE PLOTTED => 15-JUL-2009

RELATIVE BORDER SCALE IS IN INCHES 0 1 2 3

USERNAME => atruong

CU 08220

EA 0F1504

Dist	COUNTY	ROUTE	POST MILES TOTAL PROJECT	SHEET No.	TOTAL SHEETS
8	SBd	10	33.3/R36.9	XXX	XXX

REGISTERED CIVIL ENGINEER DATE

PLANS APPROVAL DATE

REGISTERED PROFESSIONAL ENGINEER No. Exp. CIVIL STATE OF CALIFORNIA

THE STATE OF CALIFORNIA OR ITS OFFICERS OR AGENTS SHALL NOT BE RESPONSIBLE FOR THE ACCURACY OR COMPLETENESS OF ELECTRONIC COPIES OF THIS PLAN SHEET.

SANBAG
1170 WEST 3RD STREET
2ND FLOOR
SAN BERNARDINO, CA 92410

CH2MHILL
2280 MARKET STREET
SUITE 200
RIVERSIDE, CA 92501

NOTE:

1. STATION, OFFSET, AND ELEVATION REPRESENT THE TOP, BACK OF GUTTER.

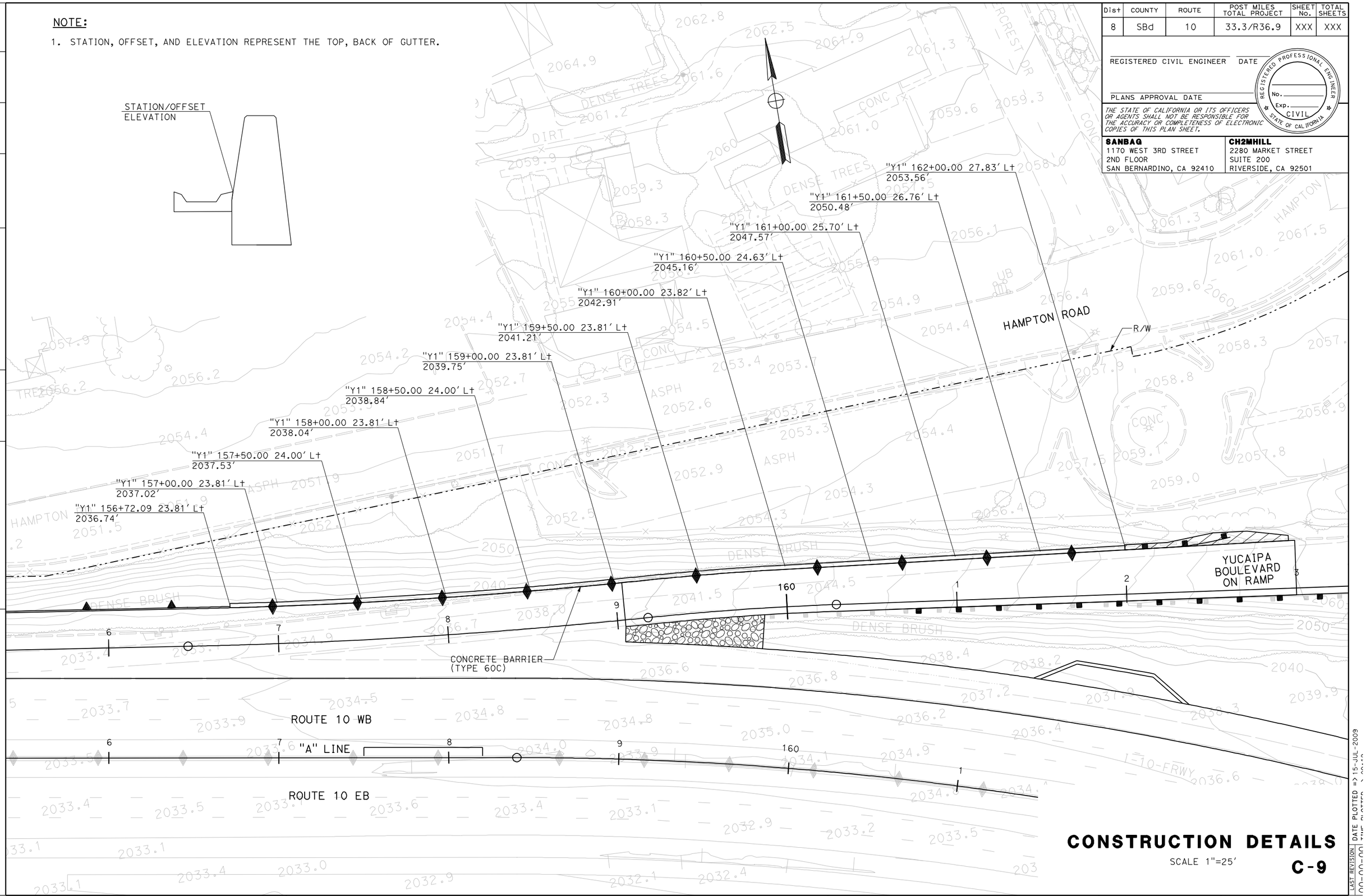

CONSTRUCTION DETAILS

SCALE 1"=25'

C-9

STATE OF CALIFORNIA - DEPARTMENT OF TRANSPORTATION

Caltrans

CONSULTANT FUNCTIONAL SUPERVISOR: MARK HAGER

CALCULATED-DESIGNED BY

CHECKED BY

REVISED BY

DATE REVISED

LAST REVISION 00-00-00 DATE PLOTTED => 15-JUL-2009 TIME PLOTTED => 00:00

RELATIVE BORDER SCALE IS IN INCHES 0 1 2 3

USERNAME => atruong

DGN FILE => 051500-c000.dgn

CU 08220

EA 0F1504

Dist	COUNTY	ROUTE	POST MILES TOTAL PROJECT	SHEET No.	TOTAL SHEETS
8	SBd	10	33.3/R36.9	XXX	XXX

REGISTERED CIVIL ENGINEER DATE

PLANS APPROVAL DATE

REGISTERED PROFESSIONAL ENGINEER No. Exp. CIVIL STATE OF CALIFORNIA

THE STATE OF CALIFORNIA OR ITS OFFICERS OR AGENTS SHALL NOT BE RESPONSIBLE FOR THE ACCURACY OR COMPLETENESS OF ELECTRONIC COPIES OF THIS PLAN SHEET.

SANBAG
1170 WEST 3RD STREET
2ND FLOOR
SAN BERNARDINO, CA 92410

CH2MHILL
2280 MARKET STREET
SUITE 200
RIVERSIDE, CA 92501

NOTE:

1. STATION, OFFSET, AND ELEVATION REPRESENT THE TOP, BACK OF GUTTER.

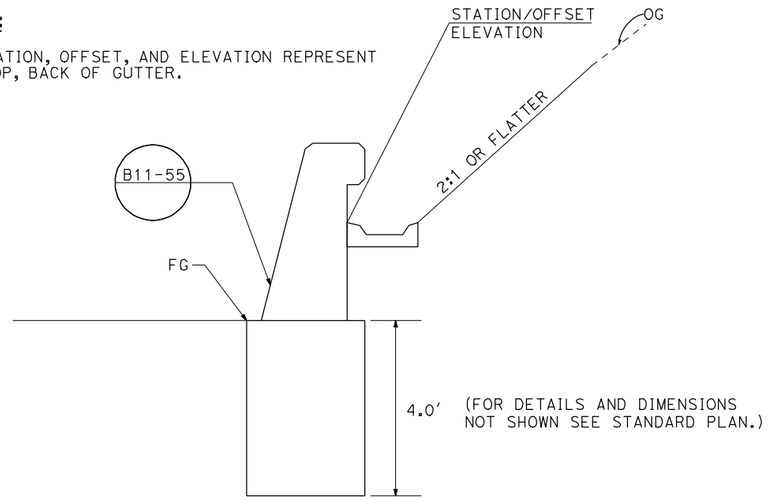

CONCRETE BARRIER (TYPE 732B MOD)

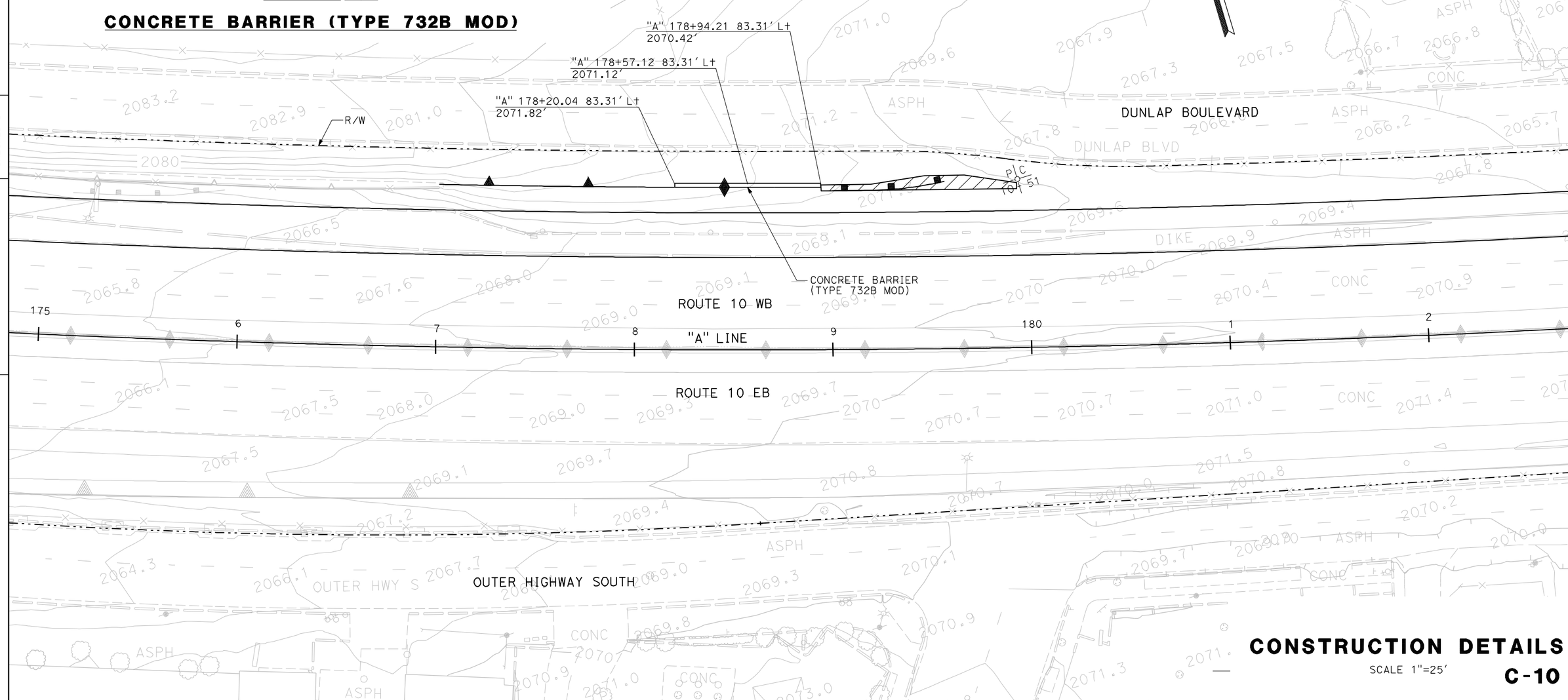

CONSTRUCTION DETAILS

SCALE 1"=25'

C-10

STATE OF CALIFORNIA - DEPARTMENT OF TRANSPORTATION

Caltrans

CONSULTANT FUNCTIONAL SUPERVISOR: MARK HAGER

CALCULATED-DESIGNED BY | CHECKED BY | REVISED BY | DATE REVISED

LAST REVISION | DATE PLOTTED => 15-JUL-2009

RELATIVE BORDER SCALE IS IN INCHES 0 1 2 3

USERNAME => dtruong

CU 08220 | EA 0F1504

Dist	COUNTY	ROUTE	POST MILES TOTAL PROJECT	SHEET No.	TOTAL SHEETS
8	SBd	10	33.3/R36.9	XXX	XXX

REGISTERED CIVIL ENGINEER DATE

PLANS APPROVAL DATE

REGISTERED PROFESSIONAL ENGINEER No. Exp. CIVIL STATE OF CALIFORNIA

THE STATE OF CALIFORNIA OR ITS OFFICERS OR AGENTS SHALL NOT BE RESPONSIBLE FOR THE ACCURACY OR COMPLETENESS OF ELECTRONIC COPIES OF THIS PLAN SHEET.

SANBAG
1170 WEST 3RD STREET
2ND FLOOR
SAN BERNARDINO, CA 92410

CH2MHILL
2280 MARKET STREET
SUITE 200
RIVERSIDE, CA 92501

NOTE:

1. STATION, OFFSET, AND ELEVATION REPRESENT THE PG.

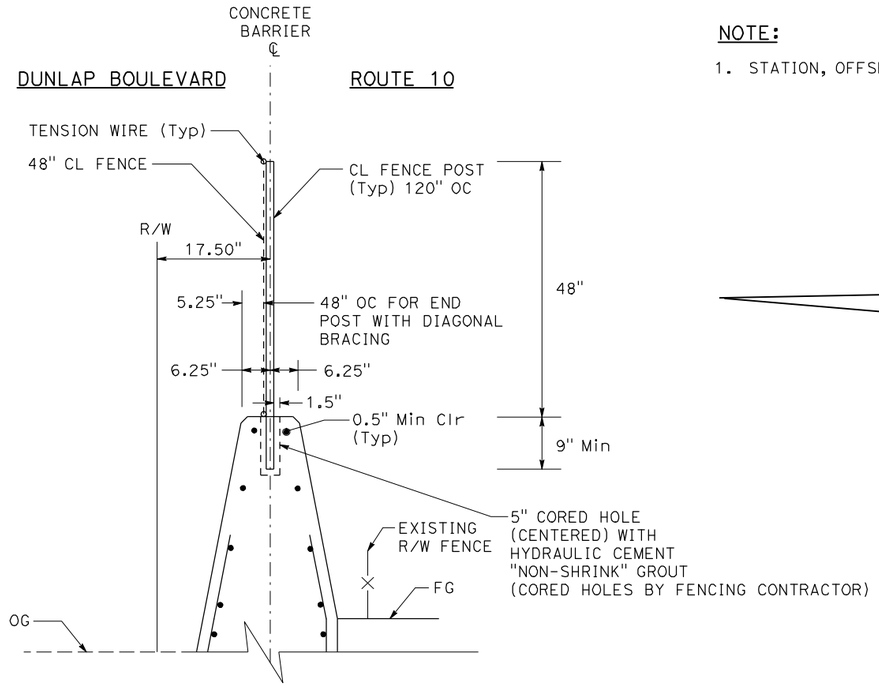

CONCRETE BARRIER (TYPE 60C WITH CL FENCE)

CONCRETE BARRIER END ANCHOR WHEN NECESSARY.
DETAILS SIMILAR TO TYPE 60C EXCEPT AS NOTED.

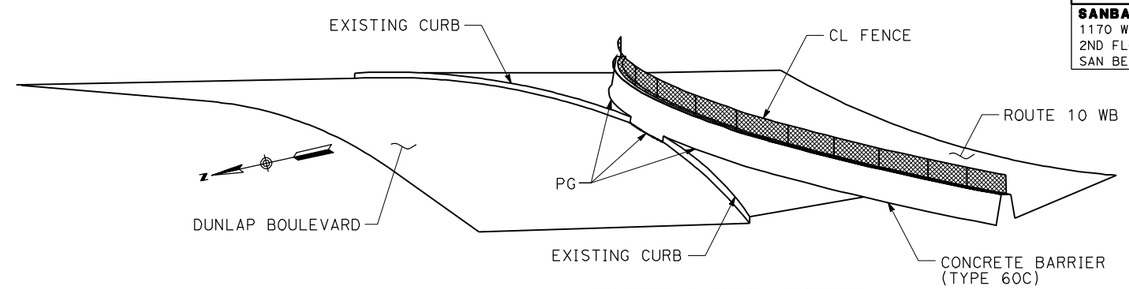

ISOMETRIC VIEW

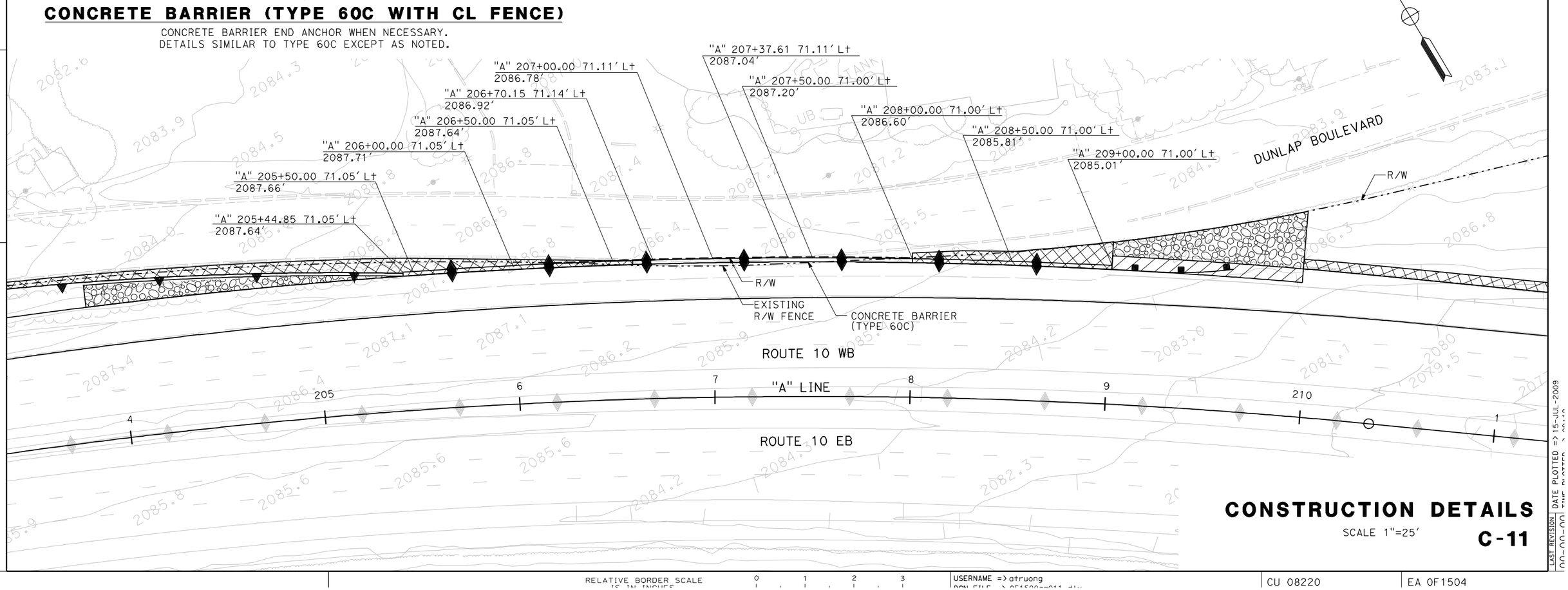

CONSTRUCTION DETAILS

SCALE 1"=25'

C-11

REVISED BY | DATE REVISED

CALCULATED-DESIGNED BY | CHECKED BY

CONSULTANT FUNCTIONAL SUPERVISOR: MARK HAGER

STATE OF CALIFORNIA - DEPARTMENT OF TRANSPORTATION

Caltrans

LAST REVISION | DATE PLOTTED => 15-JUL-2009

RELATIVE BORDER SCALE IS IN INCHES 0 1 2 3

USERNAME => atruong

CU 08220 | EA 0F1504

Dist	COUNTY	ROUTE	POST MILES TOTAL PROJECT	SHEET No.	TOTAL SHEETS
8	SBd	10	33.3/R36.9	XXX	XXX

REGISTERED CIVIL ENGINEER DATE

PLANS APPROVAL DATE

REGISTERED PROFESSIONAL ENGINEER No. Exp. CIVIL STATE OF CALIFORNIA

THE STATE OF CALIFORNIA OR ITS OFFICERS OR AGENTS SHALL NOT BE RESPONSIBLE FOR THE ACCURACY OR COMPLETENESS OF ELECTRONIC COPIES OF THIS PLAN SHEET.

SANBAG
1170 WEST 3RD STREET
2ND FLOOR
SAN BERNARDINO, CA 92410

CH2MHILL
2280 MARKET STREET
SUITE 200
RIVERSIDE, CA 92501

CONSTRUCTION DETAILS

SCALE 1"=50'

C-12

STATE OF CALIFORNIA - DEPARTMENT OF TRANSPORTATION

Caltrans

CONSULTANT FUNCTIONAL SUPERVISOR: MARK HAGER

CALCULATED-DESIGNED BY | CHECKED BY

REVISED BY | DATE REVISED

LAST REVISION | DATE PLOTTED => 15-JUL-2009

RELATIVE BORDER SCALE IS IN INCHES 0 1 2 3

USERNAME => atruong

CU 08220

EA 0F1504

Dist	COUNTY	ROUTE	POST MILES TOTAL PROJECT	SHEET No.	TOTAL SHEETS
8	SBd	10	33.3/R36.9	XXX	XXX

REGISTERED CIVIL ENGINEER DATE

PLANS APPROVAL DATE

REGISTERED PROFESSIONAL ENGINEER No. Exp. CIVIL STATE OF CALIFORNIA

THE STATE OF CALIFORNIA OR ITS OFFICERS OR AGENTS SHALL NOT BE RESPONSIBLE FOR THE ACCURACY OR COMPLETENESS OF ELECTRONIC COPIES OF THIS PLAN SHEET.

SANBAG
1170 WEST 3RD STREET
2ND FLOOR
SAN BERNARDINO, CA 92410

CH2MHILL
2280 MARKET STREET
SUITE 200
RIVERSIDE, CA 92501

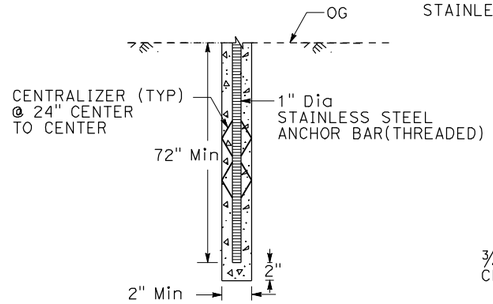

ANCHOR FOUNDATION DETAIL

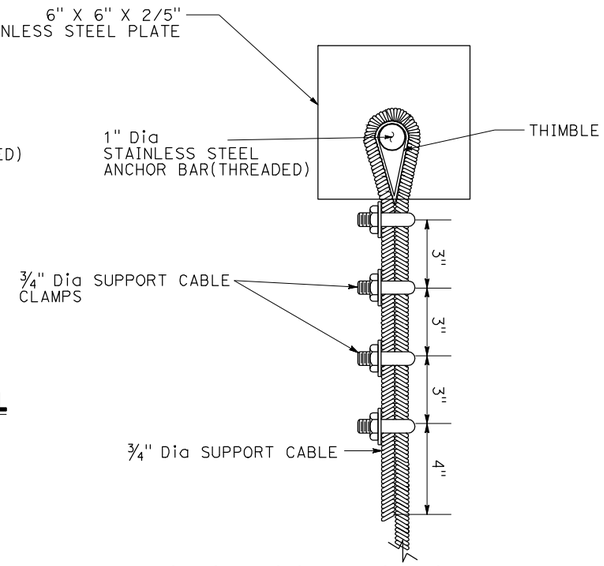

ANCHOR CONNECTION DETAIL

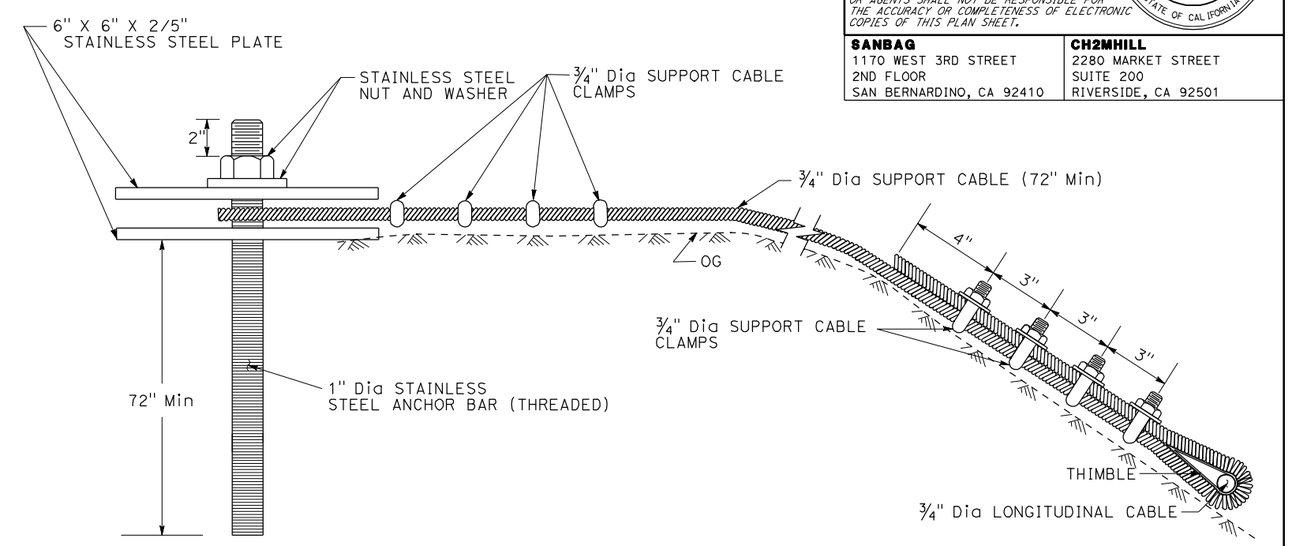

ANCHOR ASSEMBLY AND SUPPORT CABLE DETAIL

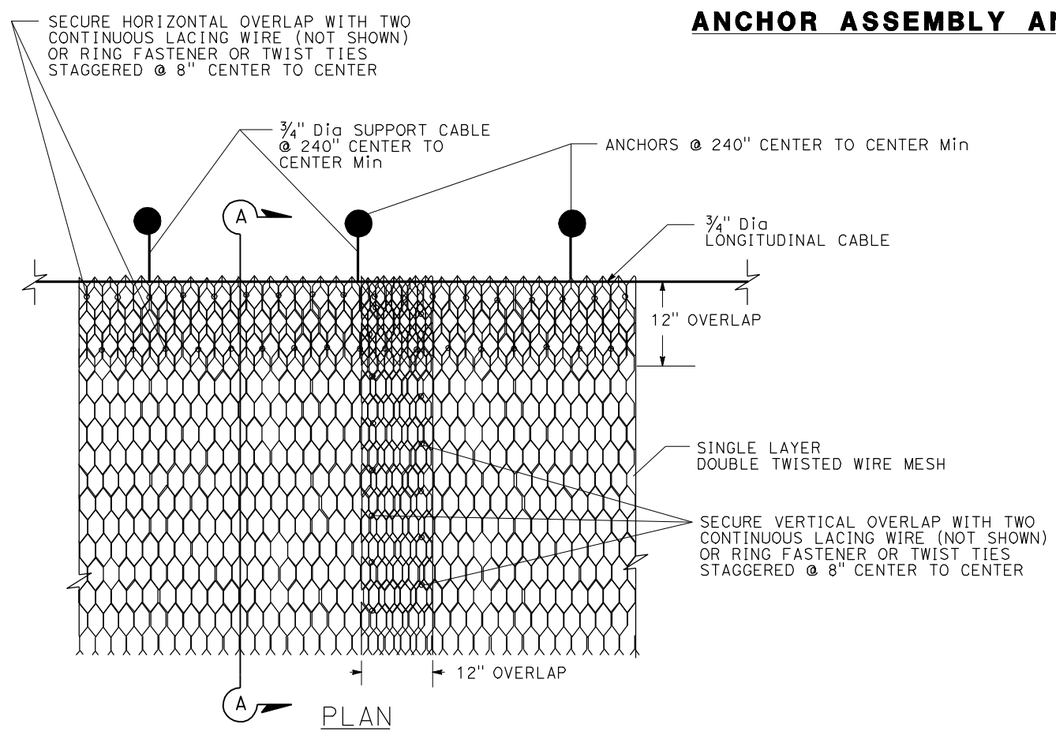

TWISTED WIRE MESH DRAPERY SYSTEM

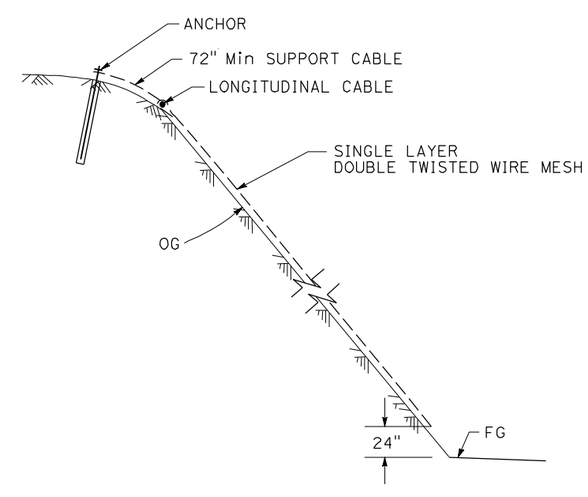

SECTION A-A

CONSTRUCTION DETAILS

NO SCALE

C-13

STATE OF CALIFORNIA - DEPARTMENT OF TRANSPORTATION

Caltrans

CONSULTANT FUNCTIONAL SUPERVISOR: MARK HAGER

CALCULATED-DESIGNED BY | CHECKED BY

REVISED BY | DATE REVISED

LAST REVISION | DATE PLOTTED => 15-JUL-2009

RELATIVE BORDER SCALE IS IN INCHES 0 1 2 3

USERNAME => gtruong

CU 08220 | EA 0F1504

Dist	COUNTY	ROUTE	POST MILES TOTAL PROJECT	SHEET No.	TOTAL SHEETS
8	SBd	10	33.3/R36.9	XXX	XXX

REGISTERED CIVIL ENGINEER DATE

PLANS APPROVAL DATE

REGISTERED PROFESSIONAL ENGINEER No. Exp. CIVIL STATE OF CALIFORNIA

THE STATE OF CALIFORNIA OR ITS OFFICERS OR AGENTS SHALL NOT BE RESPONSIBLE FOR THE ACCURACY OR COMPLETENESS OF ELECTRONIC COPIES OF THIS PLAN SHEET.

SANBAG
1170 WEST 3RD STREET
2ND FLOOR
SAN BERNARDINO, CA 92410

CH2MHILL
2280 MARKET STREET
SUITE 200
RIVERSIDE, CA 92501

CURVE DATA

No.	R	Δ	T	L
5	3799.67′	07°44′39″	257.18′	513.57′
6	1999.83′	21°49′42″	385.62′	761.88′

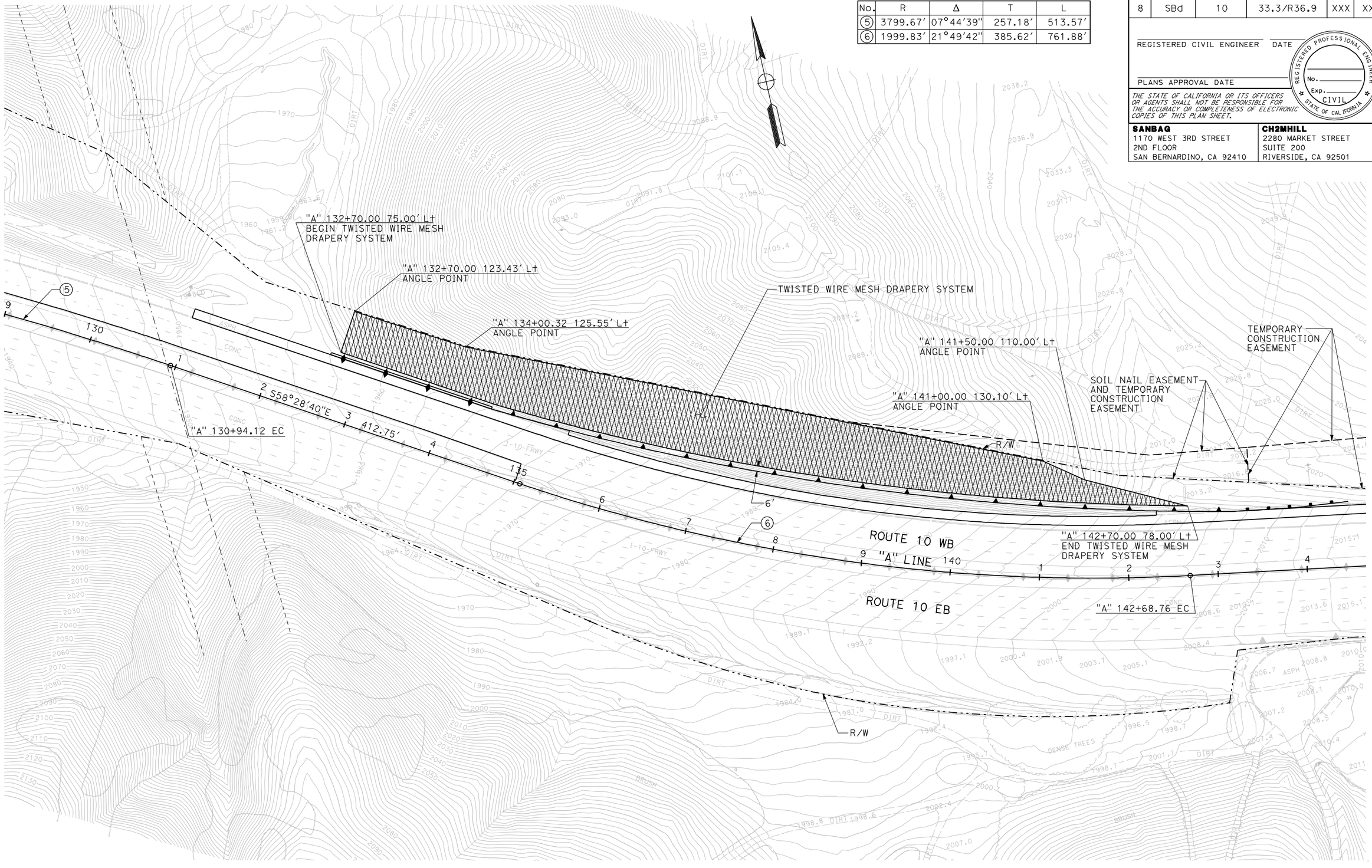

CONSTRUCTION DETAILS

SCALE 1"=50′

C-14

STATE OF CALIFORNIA - DEPARTMENT OF TRANSPORTATION

Caltrans

CONSULTANT FUNCTIONAL SUPERVISOR: MARK HAGER

CALCULATED-DESIGNED BY

CHECKED BY

REVISED BY

DATE REVISED

LAST REVISION

DATE PLOTTED => 15-JUL-2009

RELATIVE BORDER SCALE IS IN INCHES 0 1 2 3

USERNAME => atruong

CU 08220

EA 0F1504

Dist	COUNTY	ROUTE	POST MILES TOTAL PROJECT	SHEET No.	TOTAL SHEETS
8	SBd	10	33.3/R36.9	XXX	XXX

LICENSED LANDSCAPE ARCHITECT

PLANS APPROVAL DATE

LICENSED LANDSCAPE ARCHITECT Shawn T. Burch 2729 Signature 10-29-10 Renewal Date Date STATE OF CALIFORNIA

THE STATE OF CALIFORNIA OR ITS OFFICERS OR AGENTS SHALL NOT BE RESPONSIBLE FOR THE ACCURACY OR COMPLETENESS OF SCANNED COPIES OF THIS PLAN SHEET.

SANBAG
1170 WEST 3RD STREET
2ND FLOOR
SAN BERNARDINO, CA 92410

STB LANDSCAPE ARCHITECTS, INC.
15 SOUTH 5TH STREET
REDLANDS, CA 92373

NOTE:

1. FOR COMPLETE R/W AND ACCURATE ACCESS DATA, SEE R/W RECORD MAPS AT DISTRICT OFFICE.
2. THE BEARINGS AND DISTANCES SHOWN ON THESE PLANS ARE BASED ON THE CALIFORNIA COORDINATE SYSTEM, ZONE 5, PLANE 10.

LEGEND:

EROSION CONTROL (TYPE 'D')

EROSION CONTROL (BLANKET)

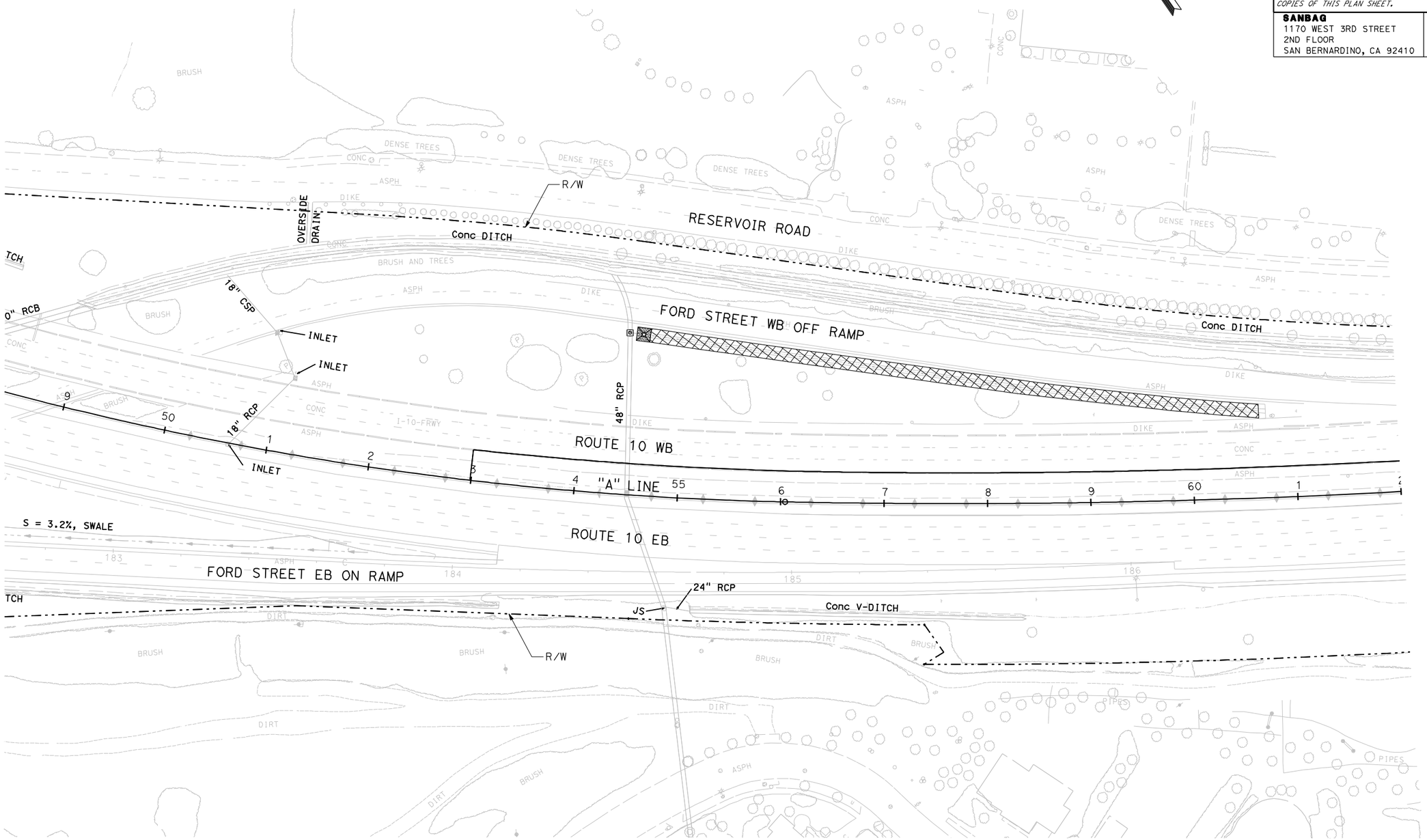

EROSION CONTROL PLAN

SCALE 1"=50'

EC-1

THIS PLAN ACCURATE FOR EROSION CONTROL WORK ONLY.

STATE OF CALIFORNIA - DEPARTMENT OF TRANSPORTATION

Caltrans

CONSULTANT FUNTIONAL SUPERVISOR: SHAWN T. BURCH

CALCULATED-DESIGNED BY | CHECKED BY

REVISED BY | DATE REVISED

LAST REVISION 00-00-00 | DATE PLOTTED => 15-JUL-2009

BORDER LAST REVISED 2/1/2008 | RELATIVE BORDER SCALE IS IN INCHES 0 1 2 3 | USERNAME => atruong | CU 0822 | EA 0F1500

Dist	COUNTY	ROUTE	POST MILES TOTAL PROJECT	SHEET No.	TOTAL SHEETS
8	SBd	10	33.3/R36.9	XXX	XXX

LICENSED LANDSCAPE ARCHITECT

PLANS APPROVAL DATE

LICENSED LANDSCAPE ARCHITECT Shawn T. Burch 2729 Signature 10-29-10 Renewal Date Date STATE OF CALIFORNIA

THE STATE OF CALIFORNIA OR ITS OFFICERS OR AGENTS SHALL NOT BE RESPONSIBLE FOR THE ACCURACY OR COMPLETENESS OF SCANNED COPIES OF THIS PLAN SHEET.

SANBAG
1170 WEST 3RD STREET
2ND FLOOR
SAN BERNARDINO, CA 92410

STB LANDSCAPE ARCHITECTS, INC.
15 SOUTH 5TH STREET
REDLANDS, CA 92373

NOTE:

1. FOR COMPLETE R/W AND ACCURATE ACCESS DATA, SEE R/W RECORD MAPS AT DISTRICT OFFICE.

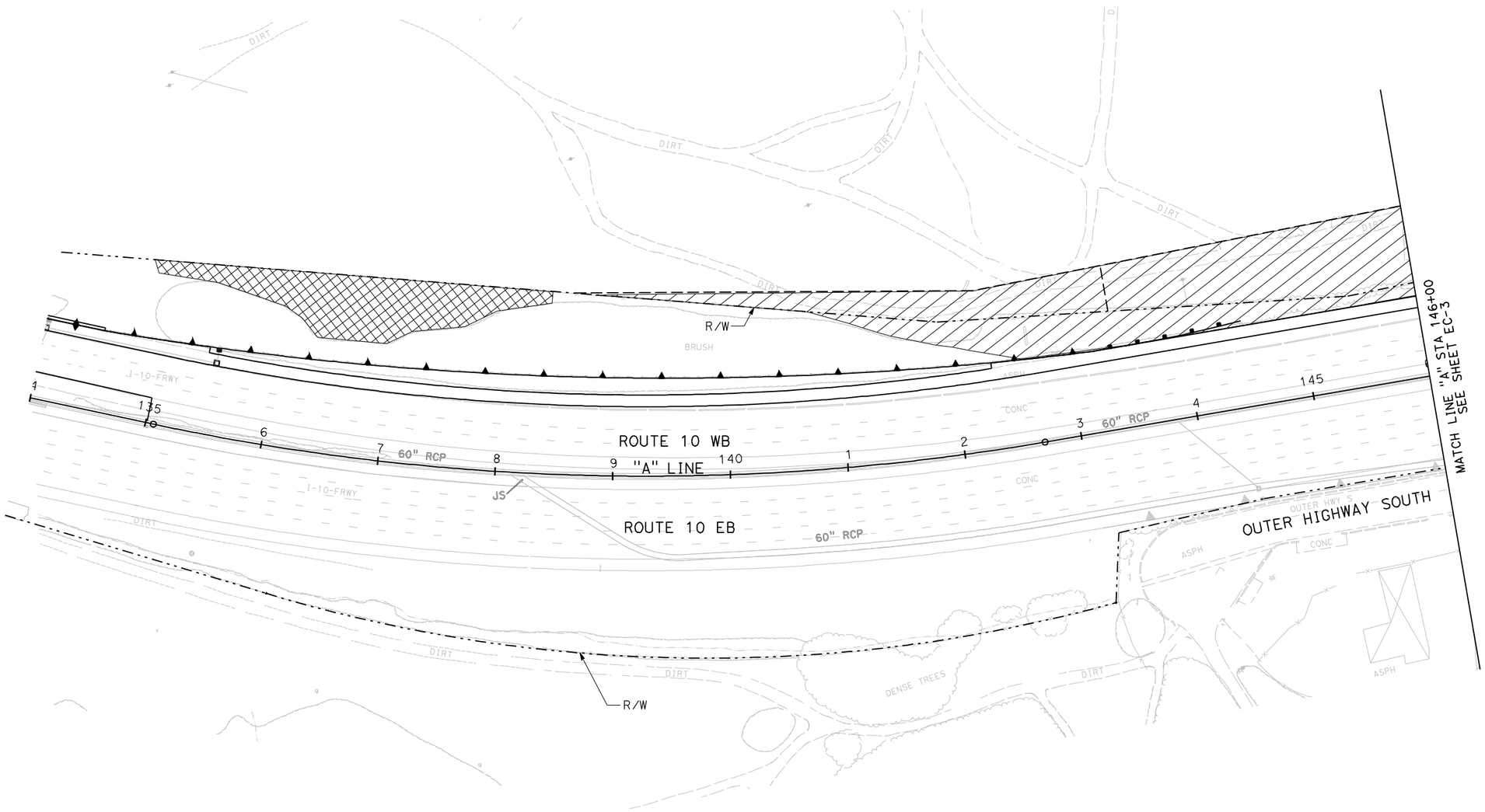

THIS PLAN ACCURATE FOR EROSION CONTROL WORK ONLY.

EROSION CONTROL PLAN

SCALE 1"=50'

EC-2

REVISED BY	DATE REVISED

CALCULATED-DESIGNED BY

CHECKED BY

CONSULTANT FUNTIONAL SUPERVISOR

SHAWN T. BURCH

STATE OF CALIFORNIA - DEPARTMENT OF TRANSPORTATION

Caltrans

LAST REVISION | DATE PLOTTED => 15-JUL-2009

BORDER LAST REVISED 2/1/2008

RELATIVE BORDER SCALE IS IN INCHES 0 1 2 3

USERNAME => atruong

CU 0822

EA 0F1500

Dist	COUNTY	ROUTE	POST MILES TOTAL PROJECT	SHEET No.	TOTAL SHEETS
8	SBd	10	33.3/R36.9	XXX	XXX

LICENSED LANDSCAPE ARCHITECT

PLANS APPROVAL DATE

LICENSED LANDSCAPE ARCHITECT
Shawn T. Burch 2729
Signature
10-29-10
Renewal Date
Date
STATE OF CALIFORNIA

THE STATE OF CALIFORNIA OR ITS OFFICERS OR AGENTS SHALL NOT BE RESPONSIBLE FOR THE ACCURACY OR COMPLETENESS OF SCANNED COPIES OF THIS PLAN SHEET.

SANBAG
1170 WEST 3RD STREET
2ND FLOOR
SAN BERNARDINO, CA 92410

STB LANDSCAPE ARCHITECTS, INC.
15 SOUTH 5TH STREET
REDLANDS, CA 92373

NOTE:

1. FOR COMPLETE R/W AND ACCURATE ACCESS DATA, SEE R/W RECORD MAPS AT DISTRICT OFFICE.

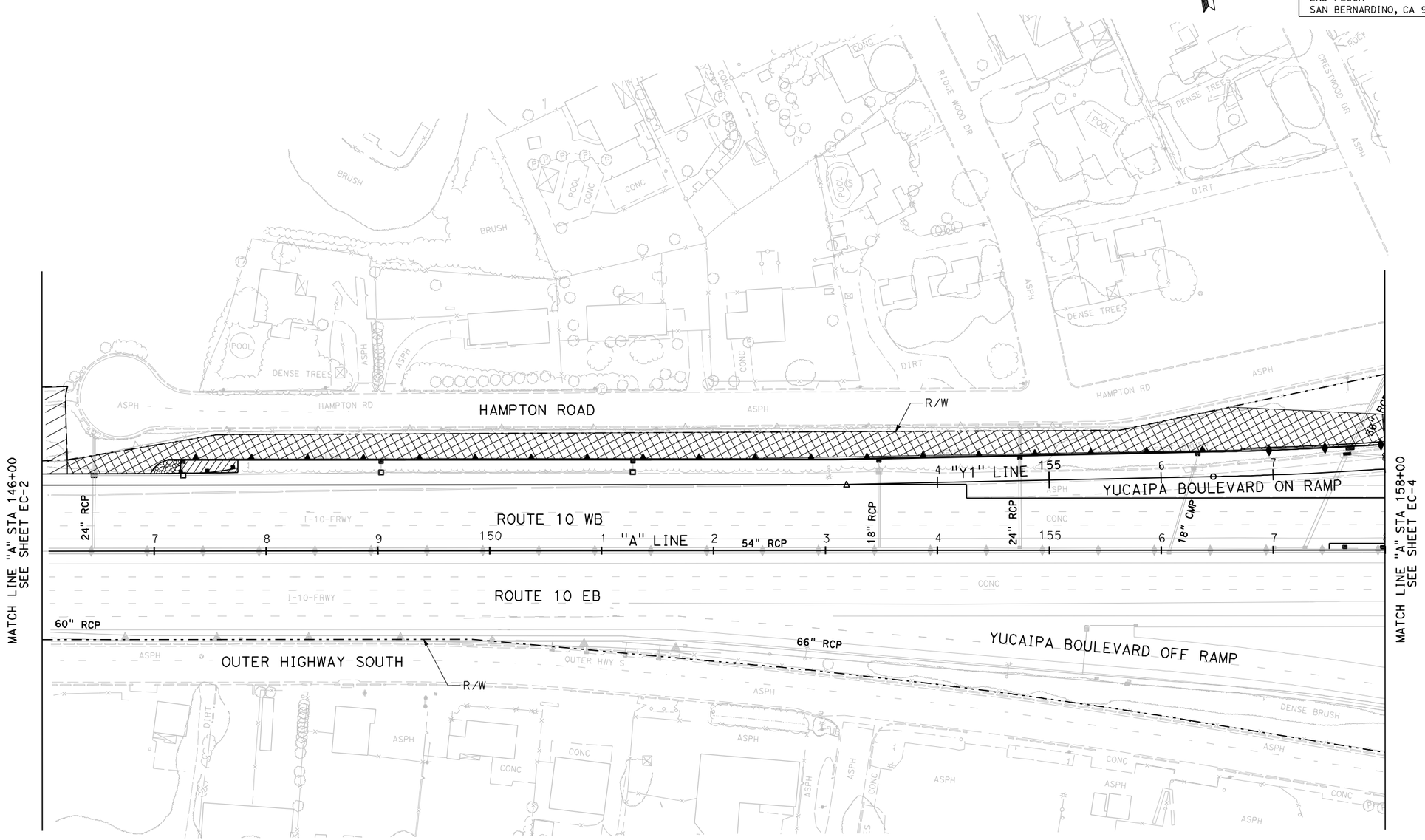

EROSION CONTROL PLAN

SCALE 1"=50'

EC-3

THIS PLAN ACCURATE FOR EROSION CONTROL WORK ONLY.

REVISED BY	DATE REVISED

CALCULATED-DESIGNED BY	CHECKED BY

CONSULTANT FUNTIONAL SUPERVISOR
SHAWN T. BURCH

STATE OF CALIFORNIA - DEPARTMENT OF TRANSPORTATION
Caltrans

LAST REVISION 00-00-00 DATE PLOTTED => 15-JUL-2009

Dist	COUNTY	ROUTE	POST MILES TOTAL PROJECT	SHEET No.	TOTAL SHEETS
8	SBd	10	33.3/R36.9	XXX	XXX

LICENSED LANDSCAPE ARCHITECT

PLANS APPROVAL DATE

LICENSED LANDSCAPE ARCHITECT Shawn T. Burch 2729 Signature 10-29-10 Renewal Date Date STATE OF CALIFORNIA

THE STATE OF CALIFORNIA OR ITS OFFICERS OR AGENTS SHALL NOT BE RESPONSIBLE FOR THE ACCURACY OR COMPLETENESS OF SCANNED COPIES OF THIS PLAN SHEET.

SANBAG
1170 WEST 3RD STREET
2ND FLOOR
SAN BERNARDINO, CA 92410

STB LANDSCAPE ARCHITECTS, INC.
15 SOUTH 5TH STREET
REDLANDS, CA 92373

NOTE:

1. FOR COMPLETE R/W AND ACCURATE ACCESS DATA, SEE R/W RECORD MAPS AT DISTRICT OFFICE.

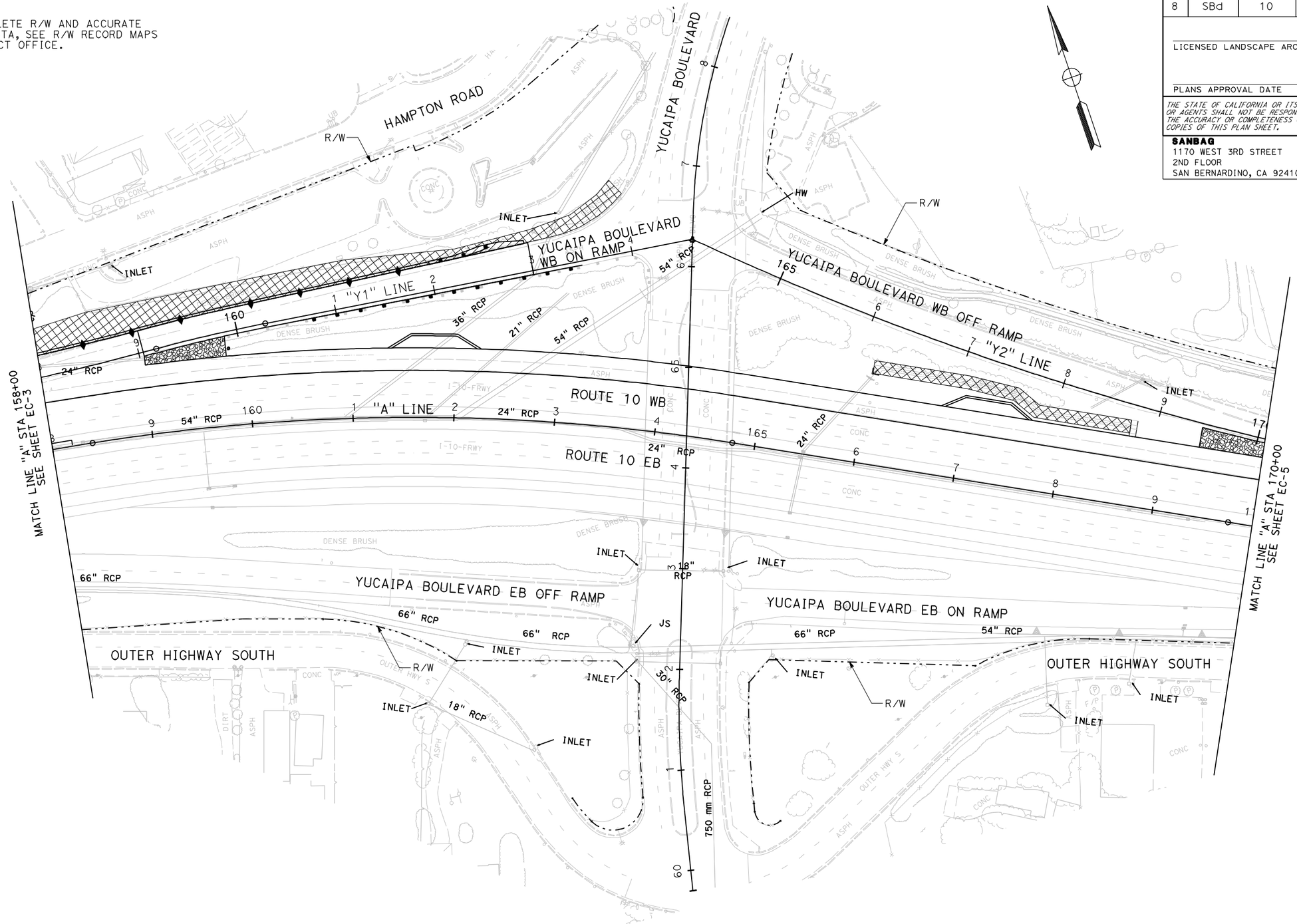

THIS PLAN ACCURATE FOR EROSION CONTROL WORK ONLY.

EROSION CONTROL PLAN

SCALE 1"=50'

EC-4

REVISED BY	DATE REVISED

CALCULATED-DESIGNED BY	CHECKED BY

CONSULTANT FUNTIONAL SUPERVISOR
SHAWN T. BURCH

STATE OF CALIFORNIA - DEPARTMENT OF TRANSPORTATION
Caltrans

LAST REVISION 00-00-00 | DATE PLOTTED => 15-JUL-2009

BORDER LAST REVISED 2/1/2008 | RELATIVE BORDER SCALE IS IN INCHES 0 1 2 3 | USERNAME => dtruong | CU 0822 | EA 0F1500

Dist	COUNTY	ROUTE	POST MILES TOTAL PROJECT	SHEET No.	TOTAL SHEETS
8	SBd	10	33.3/R36.9	XXX	XXX

LICENSED LANDSCAPE ARCHITECT

PLANS APPROVAL DATE

LICENSED LANDSCAPE ARCHITECT Shawn T. Burch 2729 Signature 10-29-10 Renewal Date Date STATE OF CALIFORNIA

THE STATE OF CALIFORNIA OR ITS OFFICERS OR AGENTS SHALL NOT BE RESPONSIBLE FOR THE ACCURACY OR COMPLETENESS OF SCANNED COPIES OF THIS PLAN SHEET.

SANBAG
1170 WEST 3RD STREET
2ND FLOOR
SAN BERNARDINO, CA 92410

STB LANDSCAPE ARCHITECTS, INC.
15 SOUTH 5TH STREET
REDLANDS, CA 92373

NOTE:

1. FOR COMPLETE R/W AND ACCURATE ACCESS DATA, SEE R/W RECORD MAPS AT DISTRICT OFFICE.

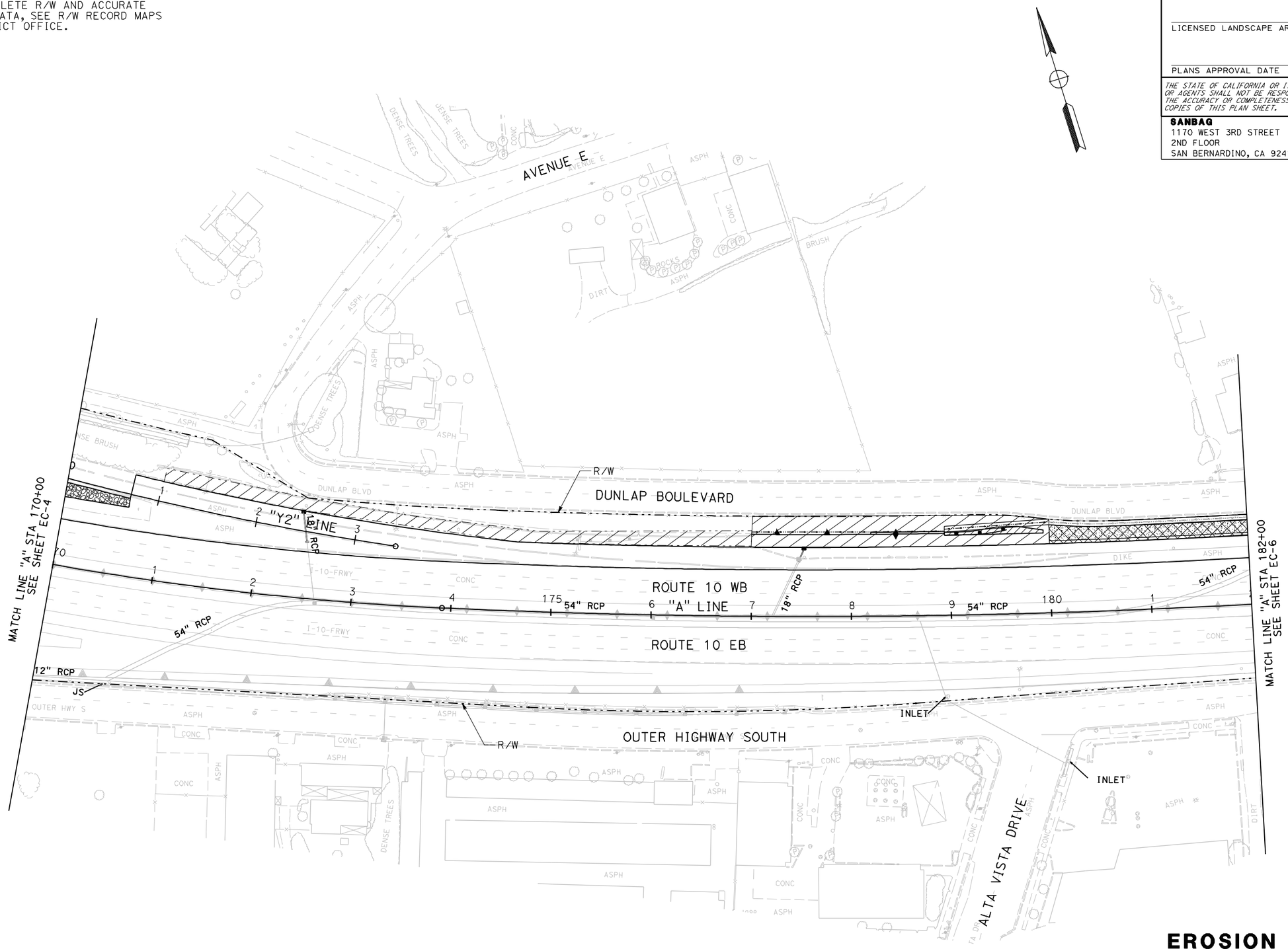

EROSION CONTROL PLAN

SCALE 1"=50'

EC-5

THIS PLAN ACCURATE FOR EROSION CONTROL WORK ONLY.

STATE OF CALIFORNIA - DEPARTMENT OF TRANSPORTATION

Caltrans

CONSULTANT FUNTIONAL SUPERVISOR: SHAWN T. BURCH

CALCULATED-DESIGNED BY

CHECKED BY

REVISED BY

DATE REVISED

LAST REVISION 00-00-00 DATE PLOTTED => 15-JUL-2009

BORDER LAST REVISED 2/1/2008

RELATIVE BORDER SCALE IS IN INCHES 0 1 2 3

USERNAME => atruong

CU 0822

EA 0F1500

Dist	COUNTY	ROUTE	POST MILES TOTAL PROJECT	SHEET No.	TOTAL SHEETS
8	SBd	10	33.3/R36.9	XXX	XXX

LICENSED LANDSCAPE ARCHITECT

PLANS APPROVAL DATE

LICENSED LANDSCAPE ARCHITECT Shawn T. Burch 2729 Signature 10-29-10 Renewal Date Date STATE OF CALIFORNIA

THE STATE OF CALIFORNIA OR ITS OFFICERS OR AGENTS SHALL NOT BE RESPONSIBLE FOR THE ACCURACY OR COMPLETENESS OF SCANNED COPIES OF THIS PLAN SHEET.

SANBAG
1170 WEST 3RD STREET
2ND FLOOR
SAN BERNARDINO, CA 92410

STB LANDSCAPE ARCHITECTS, INC.
15 SOUTH 5TH STREET
REDLANDS, CA 92373

NOTE:

1. FOR COMPLETE R/W AND ACCURATE ACCESS DATA, SEE R/W RECORD MAPS AT DISTRICT OFFICE.

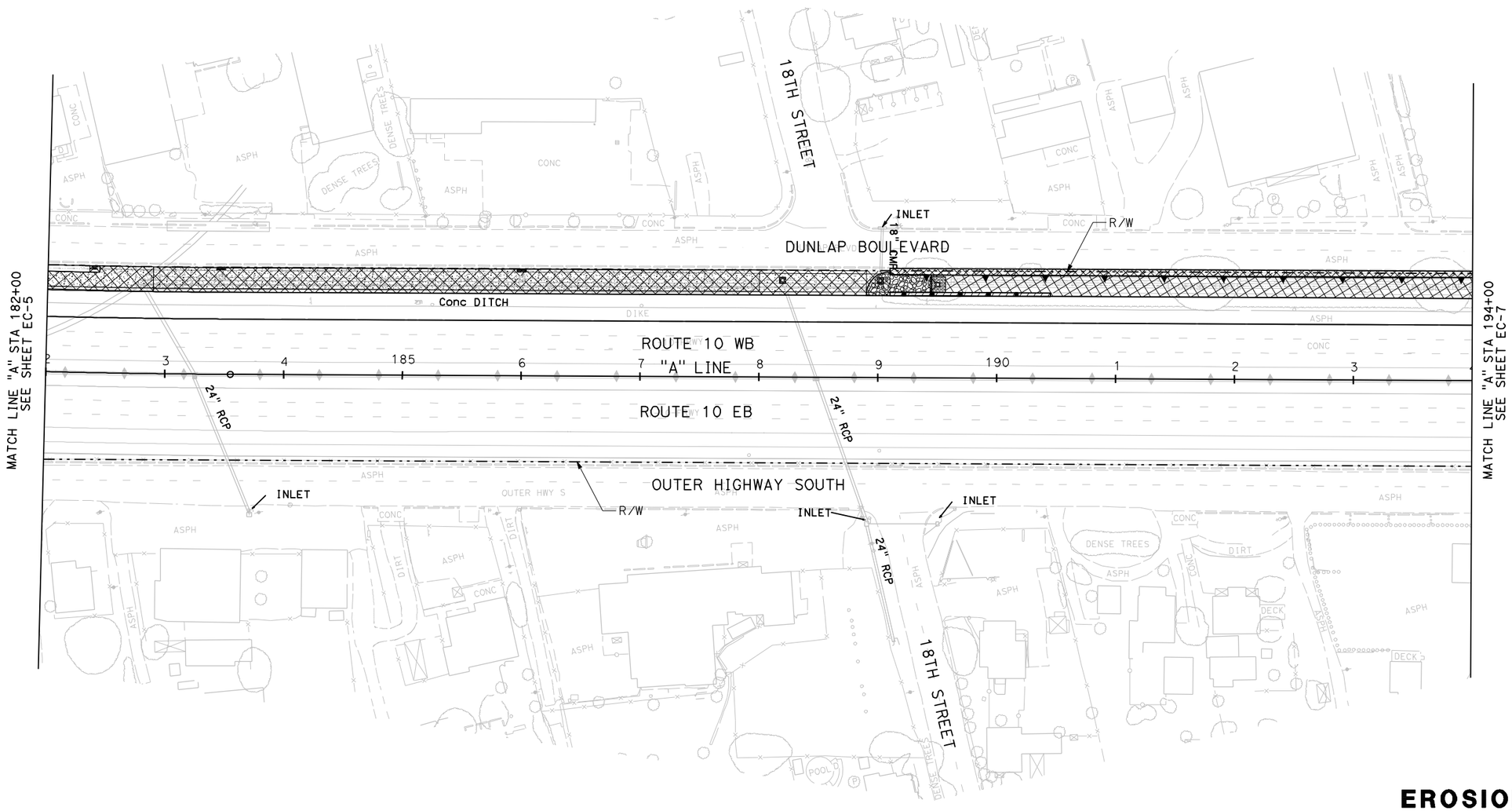

THIS PLAN ACCURATE FOR EROSION CONTROL WORK ONLY.

EROSION CONTROL PLAN

SCALE 1"=50'

EC-6

REVISED BY	DATE REVISED

CALCULATED-DESIGNED BY

CHECKED BY

CONSULTANT FUNTIONAL SUPERVISOR: SHAWN T. BURCH

STATE OF CALIFORNIA - DEPARTMENT OF TRANSPORTATION

Caltrans

LAST REVISION | DATE PLOTTED => 15-JUL-2009

BORDER LAST REVISED 2/1/2008

RELATIVE BORDER SCALE IS IN INCHES 0 1 2 3

USERNAME => atruong

CU 0822

EA 0F1500

Dist	COUNTY	ROUTE	POST MILES TOTAL PROJECT	SHEET No.	TOTAL SHEETS
8	SBd	10	33.3/R36.9	XXX	XXX

LICENSED LANDSCAPE ARCHITECT

PLANS APPROVAL DATE

LICENSED LANDSCAPE ARCHITECT Shawn T. Burch 2729 Signature 10-29-10 Renewal Date Date STATE OF CALIFORNIA

THE STATE OF CALIFORNIA OR ITS OFFICERS OR AGENTS SHALL NOT BE RESPONSIBLE FOR THE ACCURACY OR COMPLETENESS OF SCANNED COPIES OF THIS PLAN SHEET.

SANBAG
1170 WEST 3RD STREET
2ND FLOOR
SAN BERNARDINO, CA 92410

STB LANDSCAPE ARCHITECTS, INC.
15 SOUTH 5TH STREET
REDLANDS, CA 92373

NOTE:

1. FOR COMPLETE R/W AND ACCURATE ACCESS DATA, SEE R/W RECORD MAPS AT DISTRICT OFFICE.

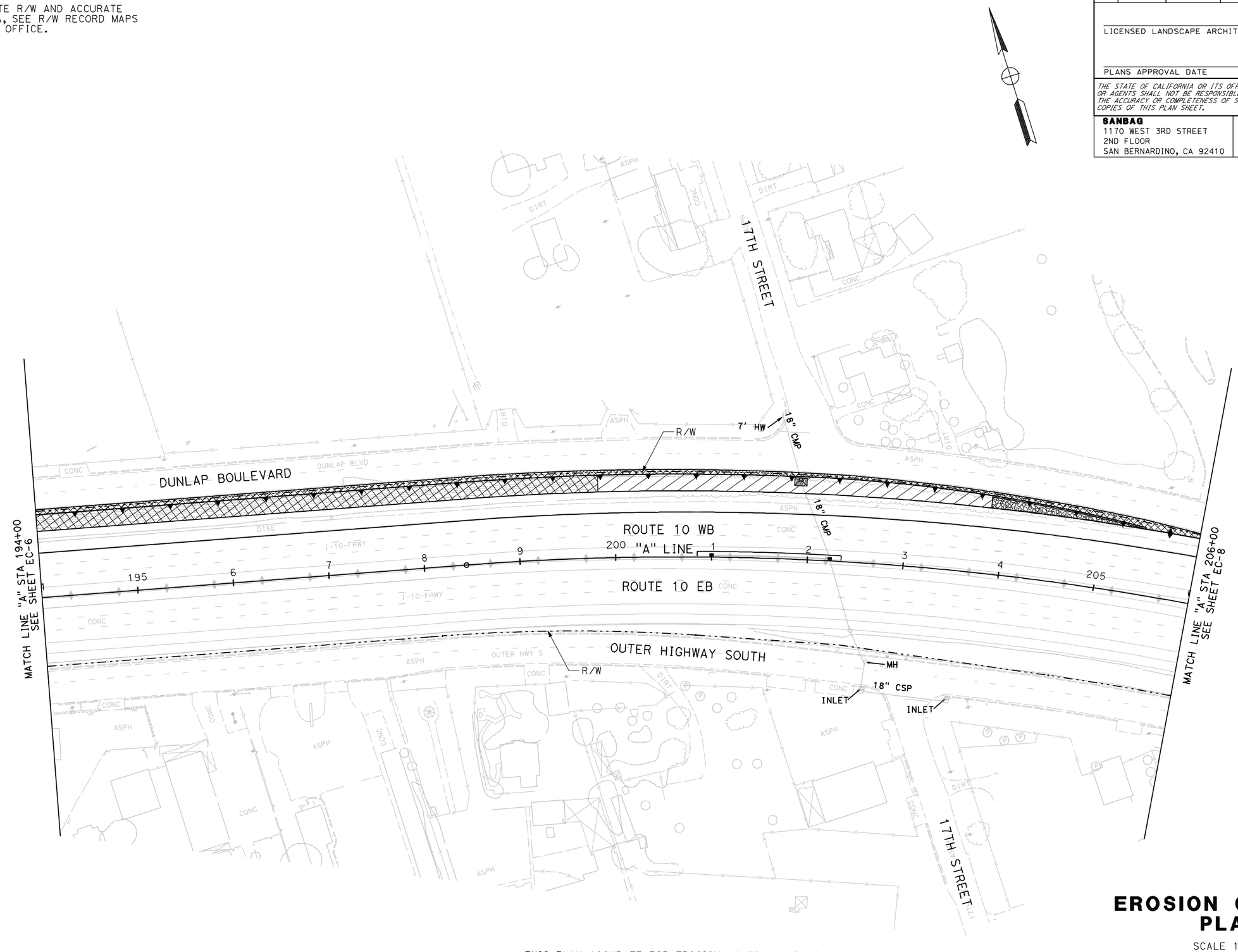

THIS PLAN ACCURATE FOR EROSION CONTROL WORK ONLY.

EROSION CONTROL PLAN

SCALE 1"=50'

EC-7

REVISED BY	DATE REVISED

CALCULATED-DESIGNED BY

CHECKED BY

CONSULTANT FUNTIONAL SUPERVISOR

SHAWN T. BURCH

STATE OF CALIFORNIA - DEPARTMENT OF TRANSPORTATION

Caltrans

LAST REVISION 00-00-00 DATE PLOTTED => 15-JUL-2009

BORDER LAST REVISED 2/1/2008

RELATIVE BORDER SCALE IS IN INCHES 0 1 2 3

USERNAME => atruong

CU 0822

EA 0F1500

Dist	COUNTY	ROUTE	POST MILES TOTAL PROJECT	SHEET No.	TOTAL SHEETS
8	SBd	10	33.3/R36.9	XXX	XXX

LICENSED LANDSCAPE ARCHITECT

PLANS APPROVAL DATE

LICENSED LANDSCAPE ARCHITECT Shawn T. Burch 2723 Signature 10-29-10 Renewal Date Date STATE OF CALIFORNIA

THE STATE OF CALIFORNIA OR ITS OFFICERS OR AGENTS SHALL NOT BE RESPONSIBLE FOR THE ACCURACY OR COMPLETENESS OF SCANNED COPIES OF THIS PLAN SHEET.

SANBAG
1170 WEST 3RD STREET
2ND FLOOR
SAN BERNARDINO, CA 92410

STB LANDSCAPE ARCHITECTS, INC.
15 SOUTH 5TH STREET
REDLANDS, CA 92373

NOTE:

1. FOR COMPLETE R/W AND ACCURATE ACCESS DATA, SEE R/W RECORD MAPS AT DISTRICT OFFICE.

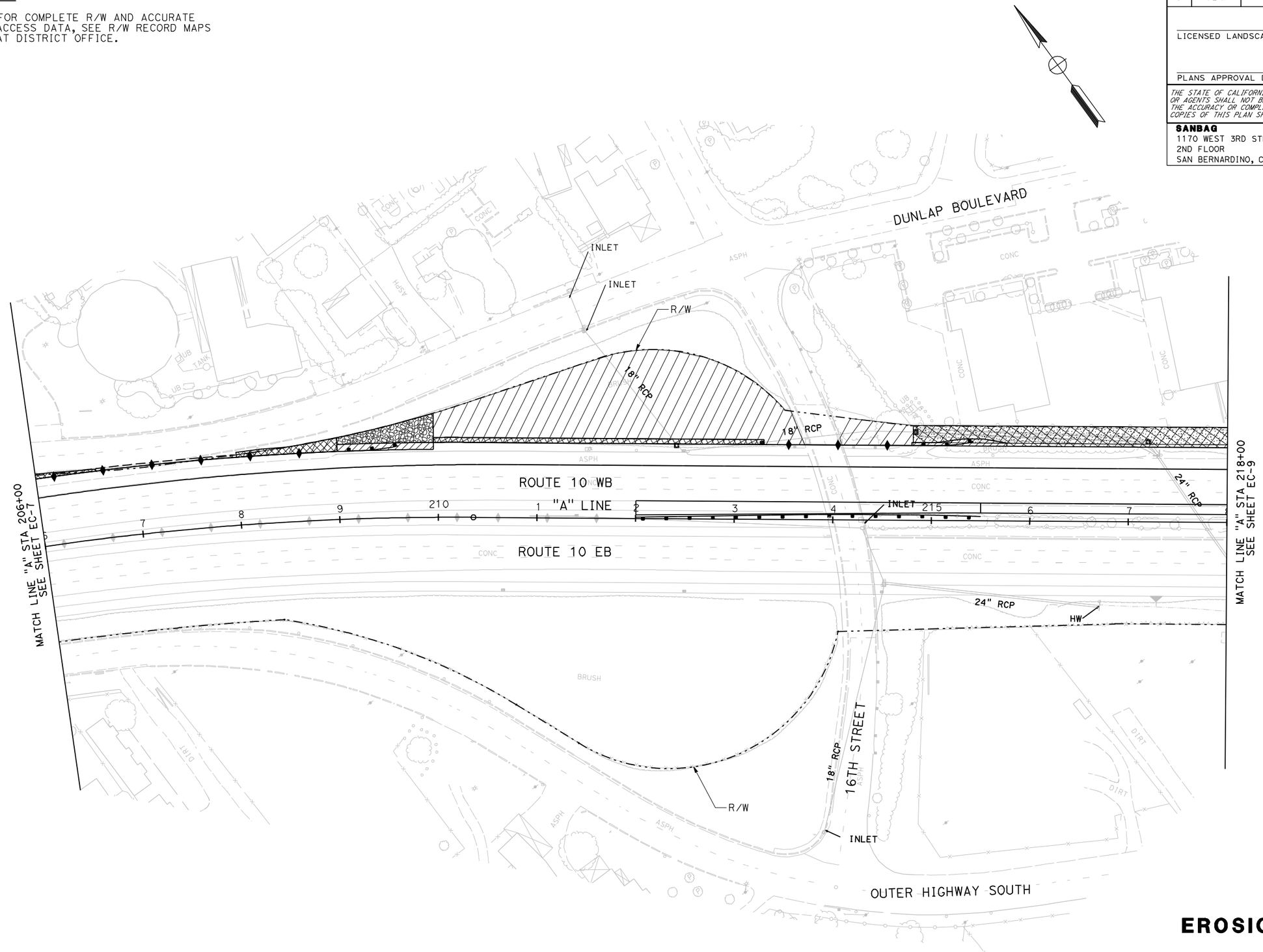

EROSION CONTROL PLAN

SCALE 1"=50'

EC-8

THIS PLAN ACCURATE FOR EROSION CONTROL WORK ONLY.

STATE OF CALIFORNIA - DEPARTMENT OF TRANSPORTATION

Caltrans

CONSULTANT FUNTIONAL SUPERVISOR: SHAWN T. BURCH

CALCULATED-DESIGNED BY

CHECKED BY

REVISED BY

DATE REVISED

LAST REVISION

DATE PLOTTED => 15-JUL-2009

BORDER LAST REVISED 2/1/2008

RELATIVE BORDER SCALE IS IN INCHES 0 1 2 3

USERNAME => atruong

CU 0822

EA 0F1500

NOTE:

1. FOR COMPLETE R/W AND ACCURATE ACCESS DATA, SEE R/W RECORD MAPS AT DISTRICT OFFICE.

Dist	COUNTY	ROUTE	POST MILES TOTAL PROJECT	SHEET No.	TOTAL SHEETS
8	SBd	10	33.3/R36.9	XXX	XXX

LICENSED LANDSCAPE ARCHITECT

PLANS APPROVAL DATE

LICENSED LANDSCAPE ARCHITECT Shawn T. Burch 2723 Signature 10-29-10 Renewal Date Date STATE OF CALIFORNIA

THE STATE OF CALIFORNIA OR ITS OFFICERS OR AGENTS SHALL NOT BE RESPONSIBLE FOR THE ACCURACY OR COMPLETENESS OF SCANNED COPIES OF THIS PLAN SHEET.

SANBAG
1170 WEST 3RD STREET
2ND FLOOR
SAN BERNARDINO, CA 92410

STB LANDSCAPE ARCHITECTS, INC.
15 SOUTH 5TH STREET
REDLANDS, CA 92373

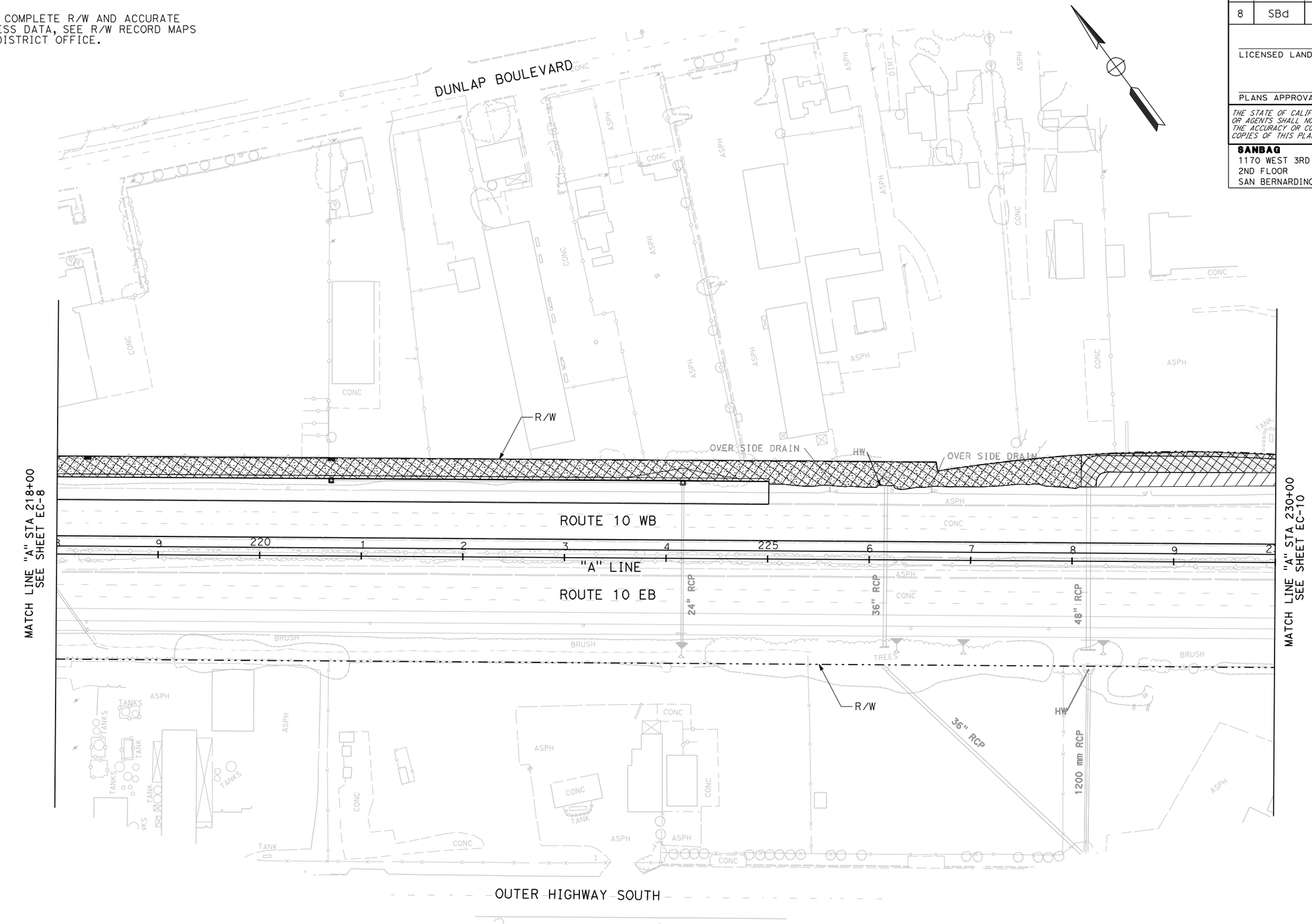

EROSION CONTROL PLAN

SCALE 1"=50'

EC-9

THIS PLAN ACCURATE FOR EROSION CONTROL WORK ONLY.

REVISED BY	DATE REVISED

CALCULATED-DESIGNED BY

CHECKED BY

CONSULTANT FUNTIONAL SUPERVISOR

SHAWN T. BURCH

STATE OF CALIFORNIA - DEPARTMENT OF TRANSPORTATION

Caltrans

LAST REVISION | DATE PLOTTED => 15-JUL-2009

BORDER LAST REVISED 2/1/2008 | RELATIVE BORDER SCALE IS IN INCHES 0 1 2 3 | USERNAME => dtruong | CU 0822 | EA 0F1500

Dist	COUNTY	ROUTE	POST MILES TOTAL PROJECT	SHEET No.	TOTAL SHEETS
8	SBd	10	33.3/R36.9	XXX	XXX

LICENSED LANDSCAPE ARCHITECT

PLANS APPROVAL DATE

LICENSED LANDSCAPE ARCHITECT Shawn T. Burch 2729 Signature 10-29-10 Renewal Date Date STATE OF CALIFORNIA

THE STATE OF CALIFORNIA OR ITS OFFICERS OR AGENTS SHALL NOT BE RESPONSIBLE FOR THE ACCURACY OR COMPLETENESS OF SCANNED COPIES OF THIS PLAN SHEET.

SANBAG
1170 WEST 3RD STREET
2ND FLOOR
SAN BERNARDINO, CA 92410

STB LANDSCAPE ARCHITECTS, INC.
15 SOUTH 5TH STREET
REDLANDS, CA 92373

NOTE:

1. FOR COMPLETE R/W AND ACCURATE ACCESS DATA, SEE R/W RECORD MAPS AT DISTRICT OFFICE.

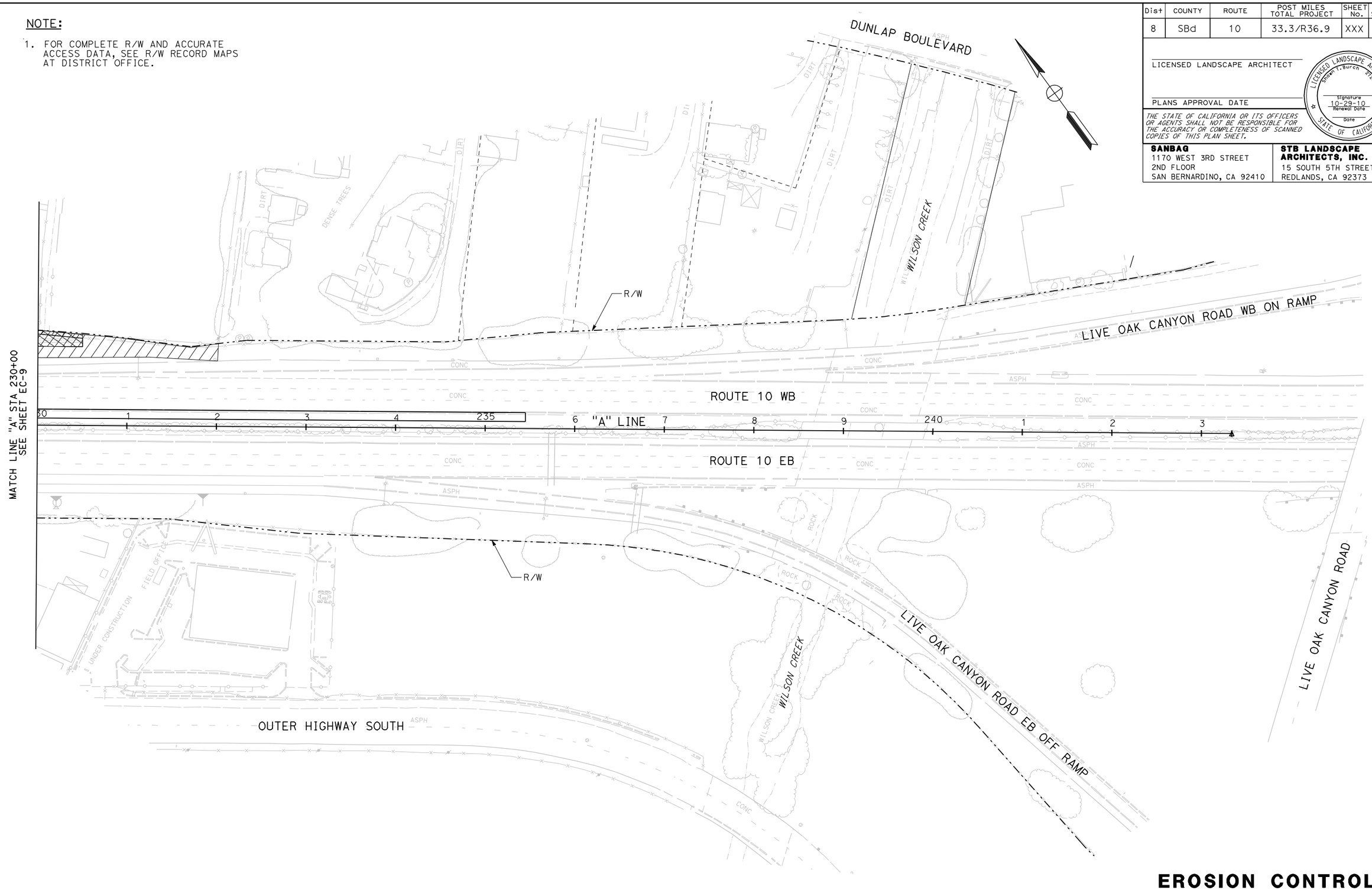

THIS PLAN ACCURATE FOR EROSION CONTROL WORK ONLY.

EROSION CONTROL PLAN

SCALE 1"=50'

EC-10

REVISED BY	DATE REVISED

CALCULATED-DESIGNED BY

CHECKED BY

CONSULTANT FUNTIONAL SUPERVISOR: SHAWN T. BURCH

STATE OF CALIFORNIA - DEPARTMENT OF TRANSPORTATION

Caltrans

LAST REVISION 00-00-00 | DATE PLOTTED => 15-JUL-2009

BORDER LAST REVISED 2/1/2008

RELATIVE BORDER SCALE IS IN INCHES 0 1 2 3

USERNAME => atruong

CU 0822

EA 0F1500

Dist	COUNTY	ROUTE	POST MILES TOTAL PROJECT	SHEET No.	TOTAL SHEETS
8	SBd	10	33.3/R36.9	XXX	XXX

LICENSED LANDSCAPE ARCHITECT

PLANS APPROVAL DATE

LICENSED LANDSCAPE ARCHITECT
Shawn T. Burch 2725
Signature
10-29-10
Renewal Date
Date
STATE OF CALIFORNIA

THE STATE OF CALIFORNIA OR ITS OFFICERS OR AGENTS SHALL NOT BE RESPONSIBLE FOR THE ACCURACY OR COMPLETENESS OF SCANNED COPIES OF THIS PLAN SHEET.

SANBAG
1170 WEST 3RD STREET
2ND FLOOR
SAN BERNARDINO, CA 92410

STB LANDSCAPE ARCHITECTS, INC.
15 SOUTH 5TH STREET
REDLANDS, CA 92373

EROSION CONTROL

	MOVE-IN/MOVE-OUT	TYPE D	BLANKET
	EA	AC	SY
TOTAL	3	2.1	15,560

EROSION CONTROL QUANTITIES

ECQ-1

STATE OF CALIFORNIA - DEPARTMENT OF TRANSPORTATION

Caltrans

CONSULTANT FUNTIONAL SUPERVISOR: SHAWN T. BURCH

CALCULATED-DESIGNED BY

CHECKED BY

REVISED BY

DATE REVISED

LAST REVISION

DATE PLOTTED => 15-JUL-2009

Dist	COUNTY	ROUTE	POST MILES TOTAL PROJECT	SHEET No.	TOTAL SHEETS
8	SBd	10	33.3/R36.9	XXX	XXX

REGISTERED CIVIL ENGINEER DATE

PLANS APPROVAL DATE

REGISTERED PROFESSIONAL ENGINEER No. Exp. CIVIL STATE OF CALIFORNIA

THE STATE OF CALIFORNIA OR ITS OFFICERS OR AGENTS SHALL NOT BE RESPONSIBLE FOR THE ACCURACY OR COMPLETENESS OF ELECTRONIC COPIES OF THIS PLAN SHEET.

SANBAG
1170 WEST 3RD STREET
2ND FLOOR
SAN BERNARDINO, CA 92410

CH2MHILL
2280 MARKET STREET
SUITE 200
RIVERSIDE, CA 92501

NOTE:

1. FOR COMPLETE R/W AND ACCURATE ACCESS DATA, SEE R/W RECORD MAPS AT DISTRICT OFFICE.
2. THE BEARINGS AND DISTANCES SHOWN ON THESE PLANS ARE BASED ON THE CALIFORNIA COORDINATE SYSTEM, ZONE 5, PLANE 10.

LEGEND:

CURVE DATA

No.	R	Δ	T	L
1	3199.23′	33°52′55″	974.50′	1891.87′
2	7943.34′	18°26′29″	1289.48′	2556.66′

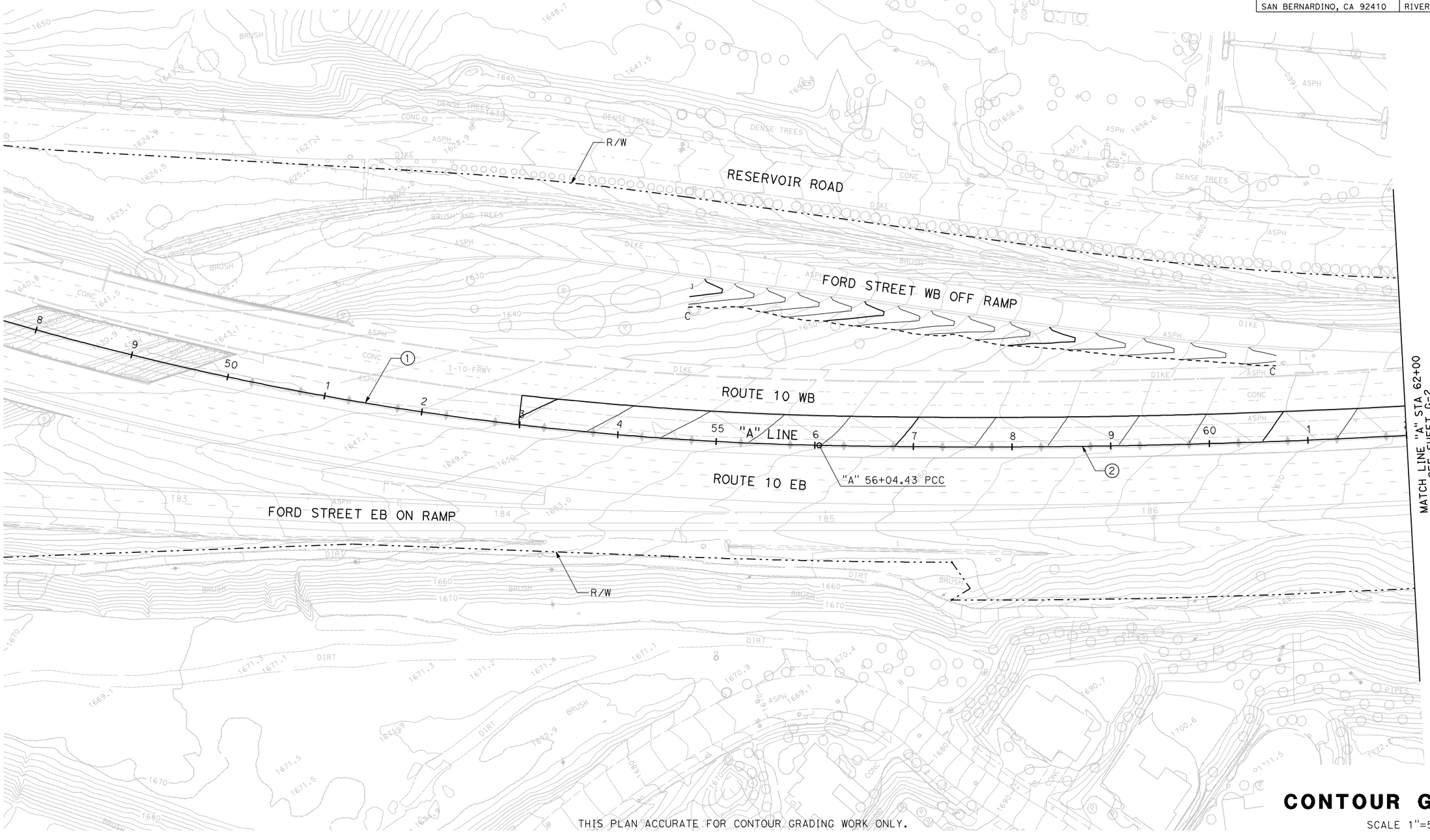

THIS PLAN ACCURATE FOR CONTOUR GRADING WORK ONLY.

CONTOUR GRADING

SCALE 1"=50′

G-1

STATE OF CALIFORNIA - DEPARTMENT OF TRANSPORTATION

Caltrans

CONSULTANT FUNCTIONAL SUPERVISOR: MARK HAGER

CALCULATED-DESIGNED BY

CHECKED BY

REVISED BY

DATE REVISED

LAST REVISION 00-00-00

DATE PLOTTED => 15-JUL-2009

RELATIVE BORDER SCALE IS IN INCHES 0 1 2 3

USERNAME => gtruong

CU 08220

EA 0F1504

Dist	COUNTY	ROUTE	POST MILES TOTAL PROJECT	SHEET No.	TOTAL SHEETS
8	SBd	10	33.3/R36.9	XXX	XXX

REGISTERED CIVIL ENGINEER DATE

PLANS APPROVAL DATE

REGISTERED PROFESSIONAL ENGINEER No. Exp. CIVIL STATE OF CALIFORNIA

THE STATE OF CALIFORNIA OR ITS OFFICERS OR AGENTS SHALL NOT BE RESPONSIBLE FOR THE ACCURACY OR COMPLETENESS OF ELECTRONIC COPIES OF THIS PLAN SHEET.

SANBAG
1170 WEST 3RD STREET
2ND FLOOR
SAN BERNARDINO, CA 92410

CH2MHILL
2280 MARKET STREET
SUITE 200
RIVERSIDE, CA 92501

NOTE:

1. FOR COMPLETE R/W AND ACCURATE ACCESS DATA, SEE R/W RECORD MAPS AT DISTRICT OFFICE.

CURVE DATA

No.	R	Δ	T	L
2	7943.34′	18°26′29″	1289.48′	2556.66′

CONTOUR GRADING

SCALE 1"=50′

G-2

STATE OF CALIFORNIA - DEPARTMENT OF TRANSPORTATION

Caltrans

CONSULTANT FUNCTIONAL SUPERVISOR: MARK HAGER

CALCULATED-DESIGNED BY

CHECKED BY

REVISED BY

DATE REVISED

LAST REVISION

DATE PLOTTED => 15-JUL-2009

RELATIVE BORDER SCALE IS IN INCHES 0 1 2 3

USERNAME => dtruong

CU 08220

EA 0F1504

NOTE:

1. FOR COMPLETE R/W AND ACCURATE ACCESS DATA, SEE R/W RECORD MAPS AT DISTRICT OFFICE.

CURVE DATA

No.	R	Δ	T	L
2	7943.34′	18°26′29″	1289.48′	2556.66′

Dist	COUNTY	ROUTE	POST MILES TOTAL PROJECT	SHEET No.	TOTAL SHEETS
8	SBd	10	33.3/R36.9	XXX	XXX

REGISTERED CIVIL ENGINEER DATE

PLANS APPROVAL DATE

REGISTERED PROFESSIONAL ENGINEER No. Exp. CIVIL STATE OF CALIFORNIA

THE STATE OF CALIFORNIA OR ITS OFFICERS OR AGENTS SHALL NOT BE RESPONSIBLE FOR THE ACCURACY OR COMPLETENESS OF ELECTRONIC COPIES OF THIS PLAN SHEET.

SANBAG
1170 WEST 3RD STREET
2ND FLOOR
SAN BERNARDINO, CA 92410

CH2MHILL
2280 MARKET STREET
SUITE 200
RIVERSIDE, CA 92501

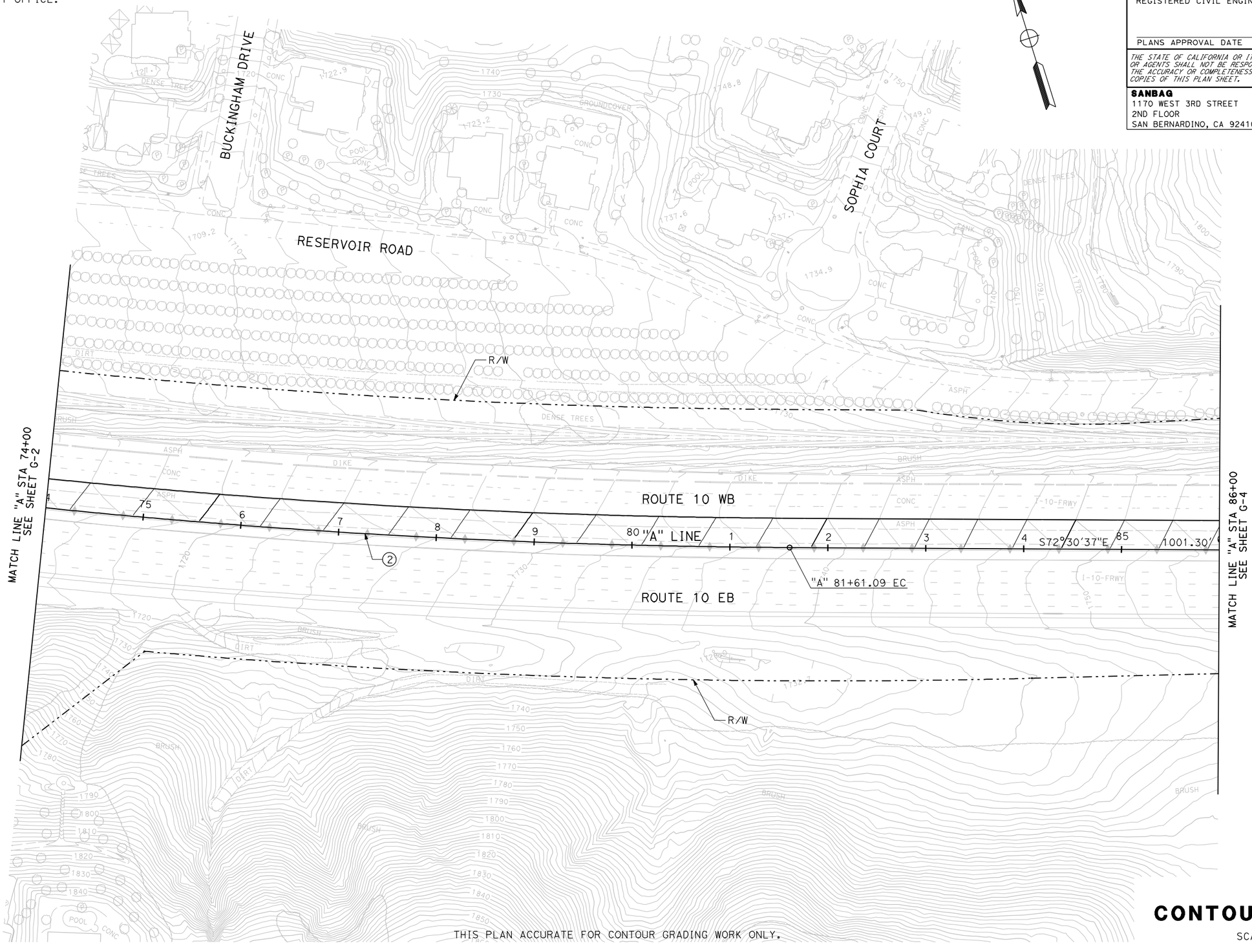

THIS PLAN ACCURATE FOR CONTOUR GRADING WORK ONLY.

CONTOUR GRADING

SCALE 1"=50′

G-3

STATE OF CALIFORNIA - DEPARTMENT OF TRANSPORTATION

Caltrans

CONSULTANT FUNCTIONAL SUPERVISOR: MARK HAGER

CALCULATED-DESIGNED BY

CHECKED BY

REVISED BY

DATE REVISED

LAST REVISION

DATE PLOTTED => 15-JUL-2009

RELATIVE BORDER SCALE IS IN INCHES 0 1 2 3

USERNAME => dtruong

CU 08220

EA 0F1504

NOTE:

1. FOR COMPLETE R/W AND ACCURATE ACCESS DATA, SEE R/W RECORD MAPS AT DISTRICT OFFICE.

CURVE DATA

No.	R	Δ	T	L
3	7999.32′	09°57′59″	697.48′	1391.44′

Dist	COUNTY	ROUTE	POST MILES TOTAL PROJECT	SHEET No.	TOTAL SHEETS
8	SBd	10	33.3/R36.9	XXX	XXX

REGISTERED CIVIL ENGINEER DATE

PLANS APPROVAL DATE

REGISTERED PROFESSIONAL ENGINEER No. Exp. CIVIL STATE OF CALIFORNIA

THE STATE OF CALIFORNIA OR ITS OFFICERS OR AGENTS SHALL NOT BE RESPONSIBLE FOR THE ACCURACY OR COMPLETENESS OF ELECTRONIC COPIES OF THIS PLAN SHEET.

SANBAG
1170 WEST 3RD STREET
2ND FLOOR
SAN BERNARDINO, CA 92410

CH2MHILL
2280 MARKET STREET
SUITE 200
RIVERSIDE, CA 92501

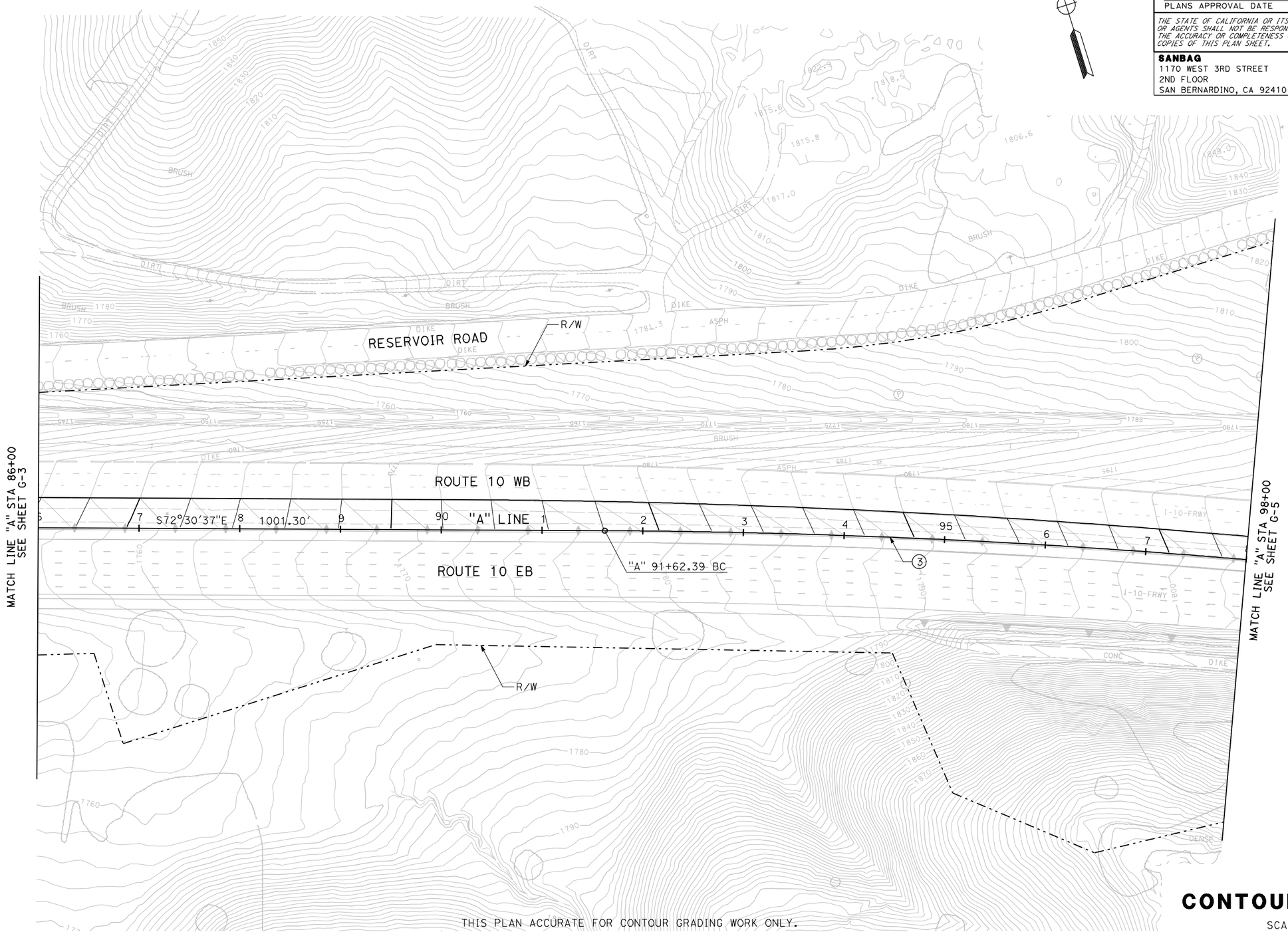

THIS PLAN ACCURATE FOR CONTOUR GRADING WORK ONLY.

CONTOUR GRADING

SCALE 1"=50′

G-4

STATE OF CALIFORNIA - DEPARTMENT OF TRANSPORTATION

Caltrans

CONSULTANT FUNCTIONAL SUPERVISOR: MARK HAGER

CALCULATED-DESIGNED BY | CHECKED BY

REVISED BY | DATE REVISED

LAST REVISION | DATE PLOTTED => 15-JUL-2009

RELATIVE BORDER SCALE IS IN INCHES 0 1 2 3

USERNAME => atruong

CU 08220

EA 0F1504

Dist	COUNTY	ROUTE	POST MILES TOTAL PROJECT	SHEET No.	TOTAL SHEETS
8	SBd	10	33.3/R36.9	XXX	XXX

REGISTERED CIVIL ENGINEER DATE

PLANS APPROVAL DATE

REGISTERED PROFESSIONAL ENGINEER No. Exp. CIVIL STATE OF CALIFORNIA

THE STATE OF CALIFORNIA OR ITS OFFICERS OR AGENTS SHALL NOT BE RESPONSIBLE FOR THE ACCURACY OR COMPLETENESS OF ELECTRONIC COPIES OF THIS PLAN SHEET.

SANBAG
1170 WEST 3RD STREET
2ND FLOOR
SAN BERNARDINO, CA 92410

CH2MHILL
2280 MARKET STREET
SUITE 200
RIVERSIDE, CA 92501

NOTE:

1. FOR COMPLETE R/W AND ACCURATE ACCESS DATA, SEE R/W RECORD MAPS AT DISTRICT OFFICE.

LEGEND:

ENVIRONMENTALLY SENSITIVE AREA

CURVE DATA

No.	R	Δ	T	L
3	7999.32′	09°57′59″	697.48′	1391.44′

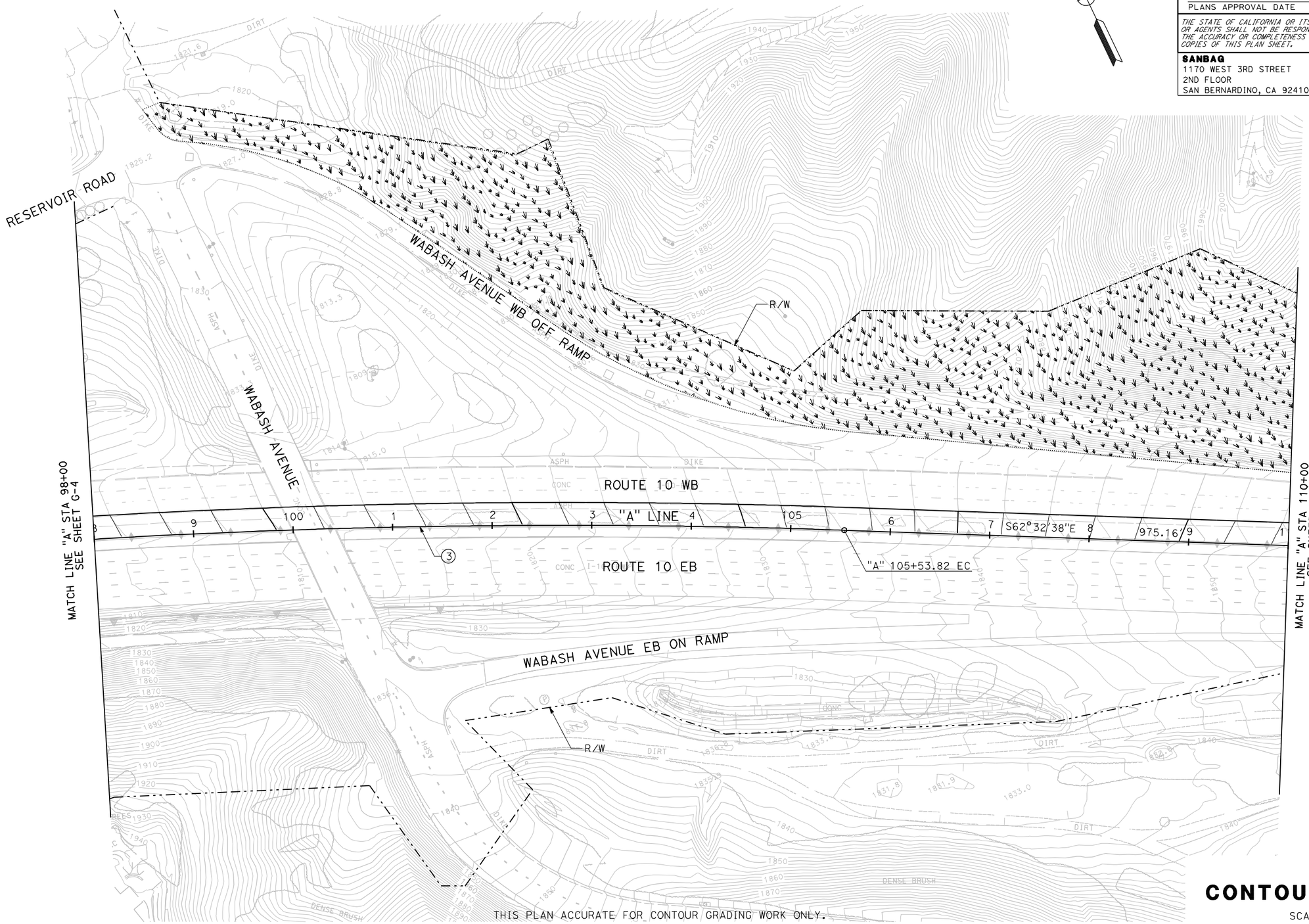

THIS PLAN ACCURATE FOR CONTOUR GRADING WORK ONLY.

CONTOUR GRADING

SCALE 1″=50′

G-5

REVISED BY	DATE REVISED

CALCULATED-DESIGNED BY

CHECKED BY

CONSULTANT FUNCTIONAL SUPERVISOR

MARK HAGER

STATE OF CALIFORNIA - DEPARTMENT OF TRANSPORTATION

Caltrans

LAST REVISION DATE PLOTTED => 15-JUL-2009

RELATIVE BORDER SCALE IS IN INCHES 0 1 2 3

USERNAME => atruong

CU 08220

EA 0F1504

NOTE:

1. FOR COMPLETE R/W AND ACCURATE ACCESS DATA, SEE R/W RECORD MAPS AT DISTRICT OFFICE.

LEGEND:

ENVIRONMENTALLY SENSITIVE AREA

CURVE DATA

No.	R	Δ	T	L
4	9999.15′	03°40′41″	321.05′	641.88′

Dist	COUNTY	ROUTE	POST MILES TOTAL PROJECT	SHEET No.	TOTAL SHEETS
8	SBd	10	33.3/R36.9	XXX	XXX

REGISTERED CIVIL ENGINEER DATE

PLANS APPROVAL DATE

REGISTERED PROFESSIONAL ENGINEER No. Exp. CIVIL STATE OF CALIFORNIA

THE STATE OF CALIFORNIA OR ITS OFFICERS OR AGENTS SHALL NOT BE RESPONSIBLE FOR THE ACCURACY OR COMPLETENESS OF ELECTRONIC COPIES OF THIS PLAN SHEET.

SANBAG
1170 WEST 3RD STREET
2ND FLOOR
SAN BERNARDINO, CA 92410

CH2MHILL
2280 MARKET STREET
SUITE 200
RIVERSIDE, CA 92501

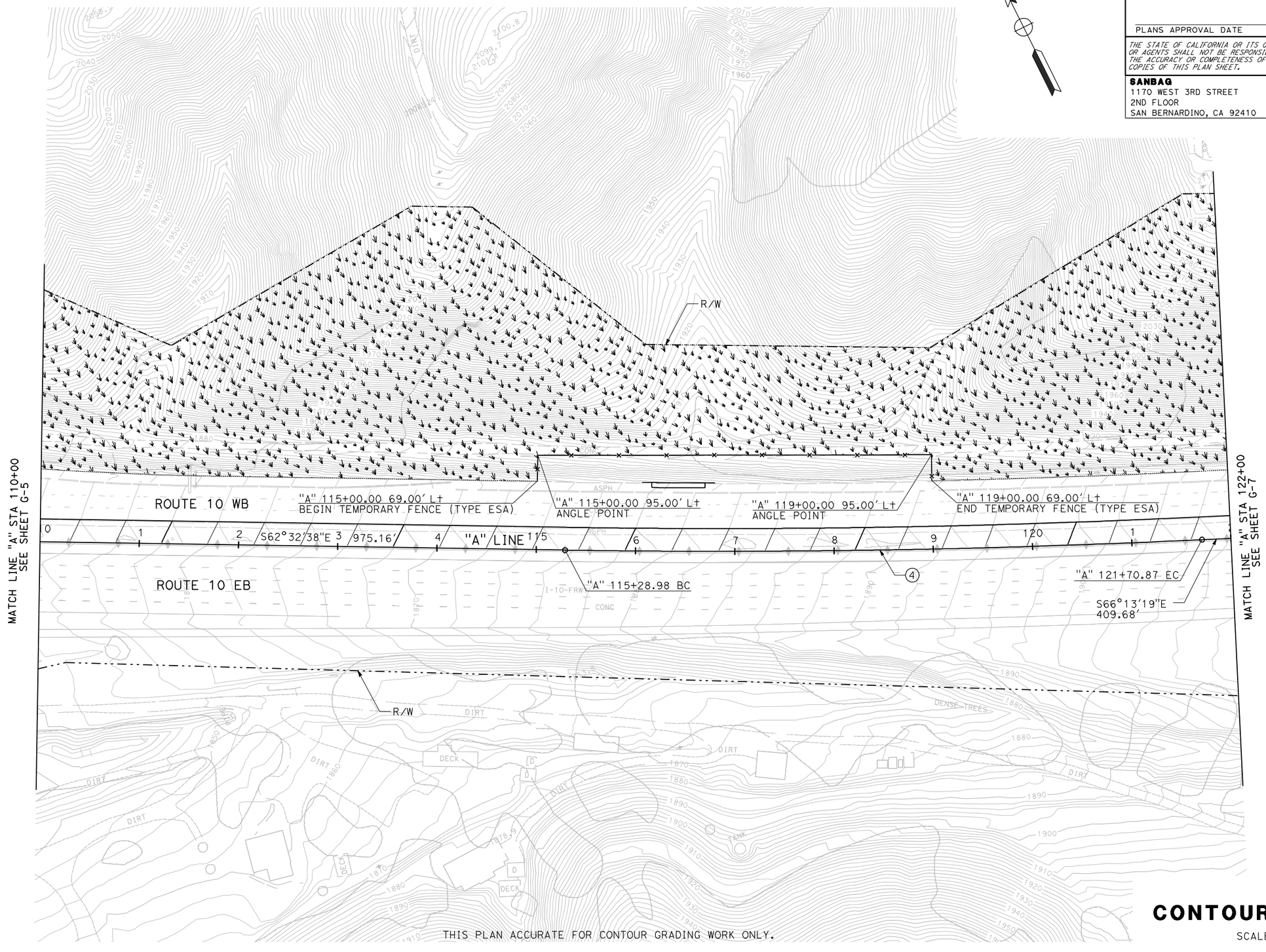

THIS PLAN ACCURATE FOR CONTOUR GRADING WORK ONLY.

CONTOUR GRADING

SCALE 1"=50′

G-6

REVISED BY	DATE REVISED

CALCULATED-DESIGNED BY

CHECKED BY

CONSULTANT FUNCTIONAL SUPERVISOR

MARK HAGER

STATE OF CALIFORNIA - DEPARTMENT OF TRANSPORTATION

Caltrans

LAST REVISION 00-00-00 | DATE PLOTTED => 15-JUL-2009 | TIME PLOTTED => 00:00

RELATIVE BORDER SCALE IS IN INCHES 0 1 2 3

USERNAME => atruong

CU 08220

EA 0F1504

Dist	COUNTY	ROUTE	POST MILES TOTAL PROJECT	SHEET No.	TOTAL SHEETS
8	SBd	10	33.3/R36.9	XXX	XXX

REGISTERED CIVIL ENGINEER DATE

PLANS APPROVAL DATE

REGISTERED PROFESSIONAL ENGINEER No. Exp. CIVIL STATE OF CALIFORNIA

THE STATE OF CALIFORNIA OR ITS OFFICERS OR AGENTS SHALL NOT BE RESPONSIBLE FOR THE ACCURACY OR COMPLETENESS OF ELECTRONIC COPIES OF THIS PLAN SHEET.

SANBAG
1170 WEST 3RD STREET
2ND FLOOR
SAN BERNARDINO, CA 92410

CH2MHILL
2280 MARKET STREET
SUITE 200
RIVERSIDE, CA 92501

NOTE:

1. FOR COMPLETE R/W AND ACCURATE ACCESS DATA, SEE R/W RECORD MAPS AT DISTRICT OFFICE.

LEGEND:

ENVIRONMENTALLY SENSITIVE AREA

CURVE DATA

No.	R	Δ	T	L
5	3799.67′	07°44′39″	257.18′	513.57′

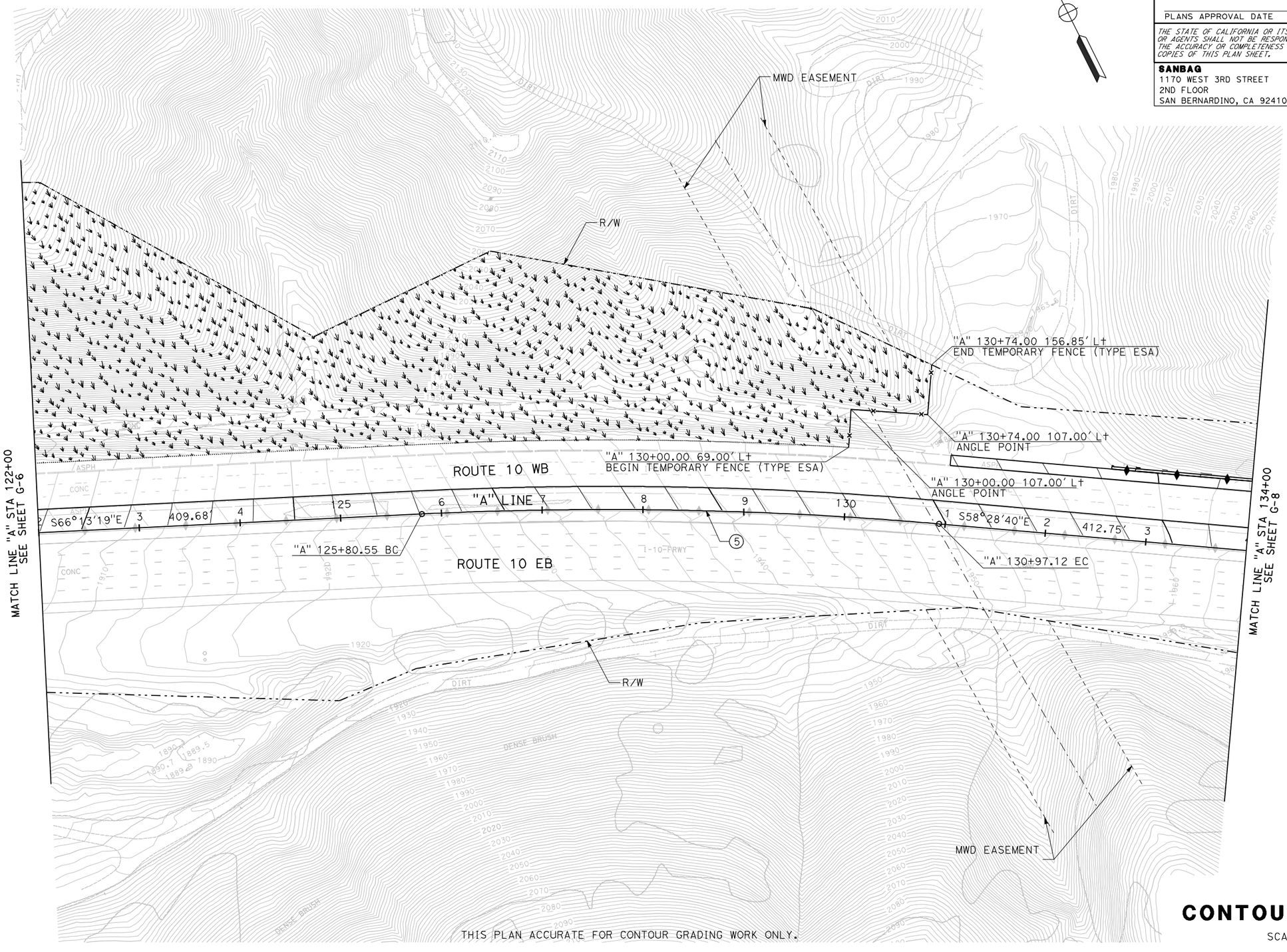

CONTOUR GRADING

SCALE 1"=50′

G-7

STATE OF CALIFORNIA - DEPARTMENT OF TRANSPORTATION

Caltrans

CONSULTANT FUNCTIONAL SUPERVISOR: MARK HAGER

CALCULATED-DESIGNED BY | CHECKED BY

REVISED BY | DATE REVISED

LAST REVISION | DATE PLOTTED => 15-JUL-2009

RELATIVE BORDER SCALE IS IN INCHES 0 1 2 3

USERNAME => atruong

CU 08220

EA 0F1504

Dist	COUNTY	ROUTE	POST MILES TOTAL PROJECT	SHEET No.	TOTAL SHEETS
8	SBd	10	33.3/R36.9	XXX	XXX

REGISTERED CIVIL ENGINEER DATE

PLANS APPROVAL DATE

REGISTERED PROFESSIONAL ENGINEER No. Exp. CIVIL STATE OF CALIFORNIA

THE STATE OF CALIFORNIA OR ITS OFFICERS OR AGENTS SHALL NOT BE RESPONSIBLE FOR THE ACCURACY OR COMPLETENESS OF ELECTRONIC COPIES OF THIS PLAN SHEET.

SANBAG
1170 WEST 3RD STREET
2ND FLOOR
SAN BERNARDINO, CA 92410

CH2MHILL
2280 MARKET STREET
SUITE 200
RIVERSIDE, CA 92501

NOTE:

1. FOR COMPLETE R/W AND ACCURATE ACCESS DATA, SEE R/W RECORD MAPS AT DISTRICT OFFICE.

CURVE DATA

No.	R	Δ	T	L
6	1999.83′	21°49′42″	385.62′	761.88′

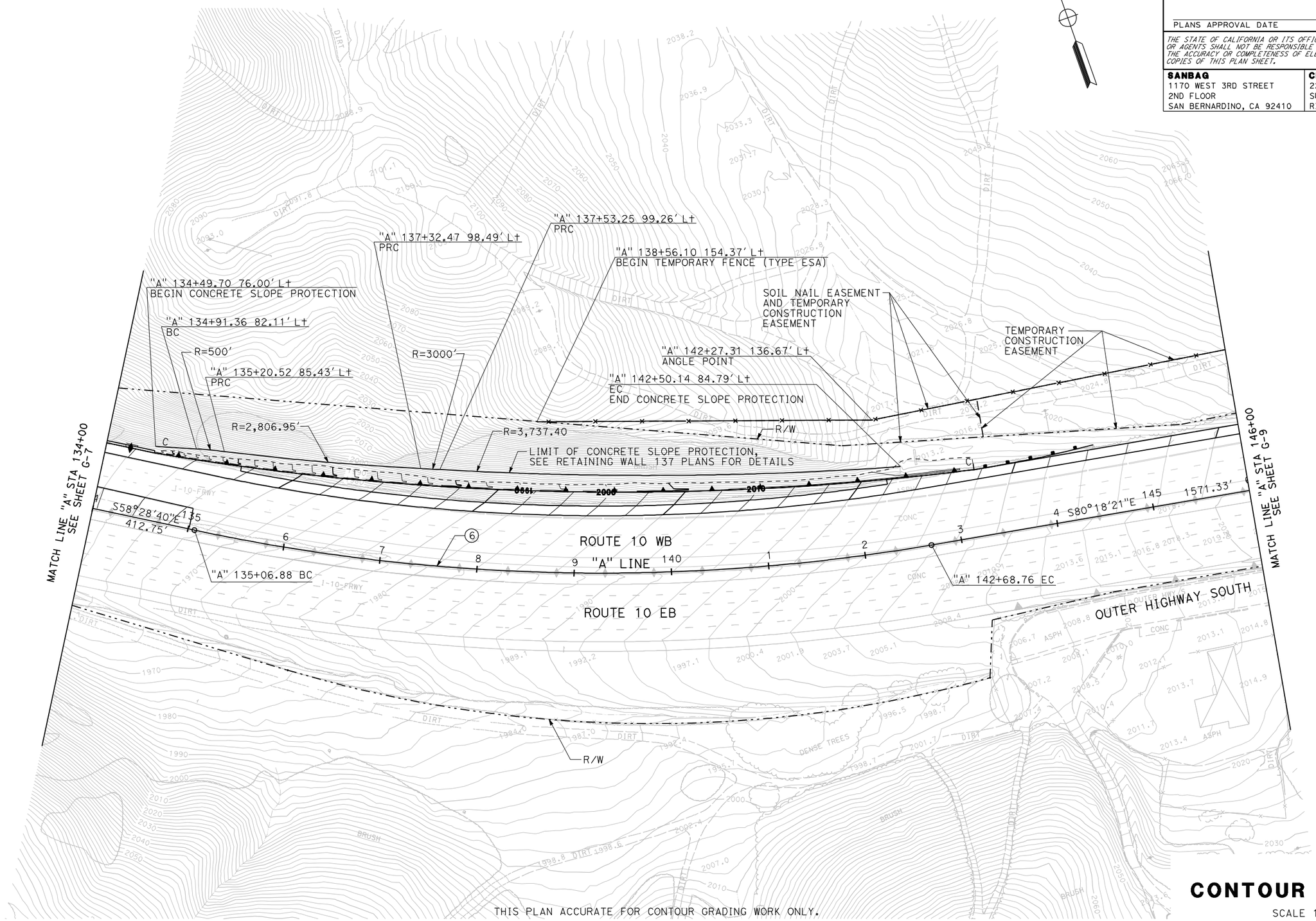

THIS PLAN ACCURATE FOR CONTOUR GRADING WORK ONLY.

CONTOUR GRADING

SCALE 1"=50′

G-8

STATE OF CALIFORNIA - DEPARTMENT OF TRANSPORTATION

Caltrans

CONSULTANT FUNCTIONAL SUPERVISOR: MARK HAGER

CALCULATED-DESIGNED BY

CHECKED BY

REVISED BY

DATE REVISED

LAST REVISION 00-00-00

DATE PLOTTED => 15-JUL-2009

RELATIVE BORDER SCALE IS IN INCHES 0 1 2 3

USERNAME => atruong

CU 08220

EA 0F1504

NOTE:

1. FOR COMPLETE R/W AND ACCURATE ACCESS DATA, SEE R/W RECORD MAPS AT DISTRICT OFFICE.

CURVE DATA

No.	R	Δ	T	L
11	3280.83′	4°44′13″	135.70′	271.24′

Dist	COUNTY	ROUTE	POST MILES TOTAL PROJECT	SHEET No.	TOTAL SHEETS
8	SBd	10	33.3/R36.9	XXX	XXX

REGISTERED CIVIL ENGINEER DATE

PLANS APPROVAL DATE

REGISTERED PROFESSIONAL ENGINEER No. Exp. CIVIL STATE OF CALIFORNIA

THE STATE OF CALIFORNIA OR ITS OFFICERS OR AGENTS SHALL NOT BE RESPONSIBLE FOR THE ACCURACY OR COMPLETENESS OF ELECTRONIC COPIES OF THIS PLAN SHEET.

SANBAG
1170 WEST 3RD STREET
2ND FLOOR
SAN BERNARDINO, CA 92410

CH2MHILL
2280 MARKET STREET
SUITE 200
RIVERSIDE, CA 92501

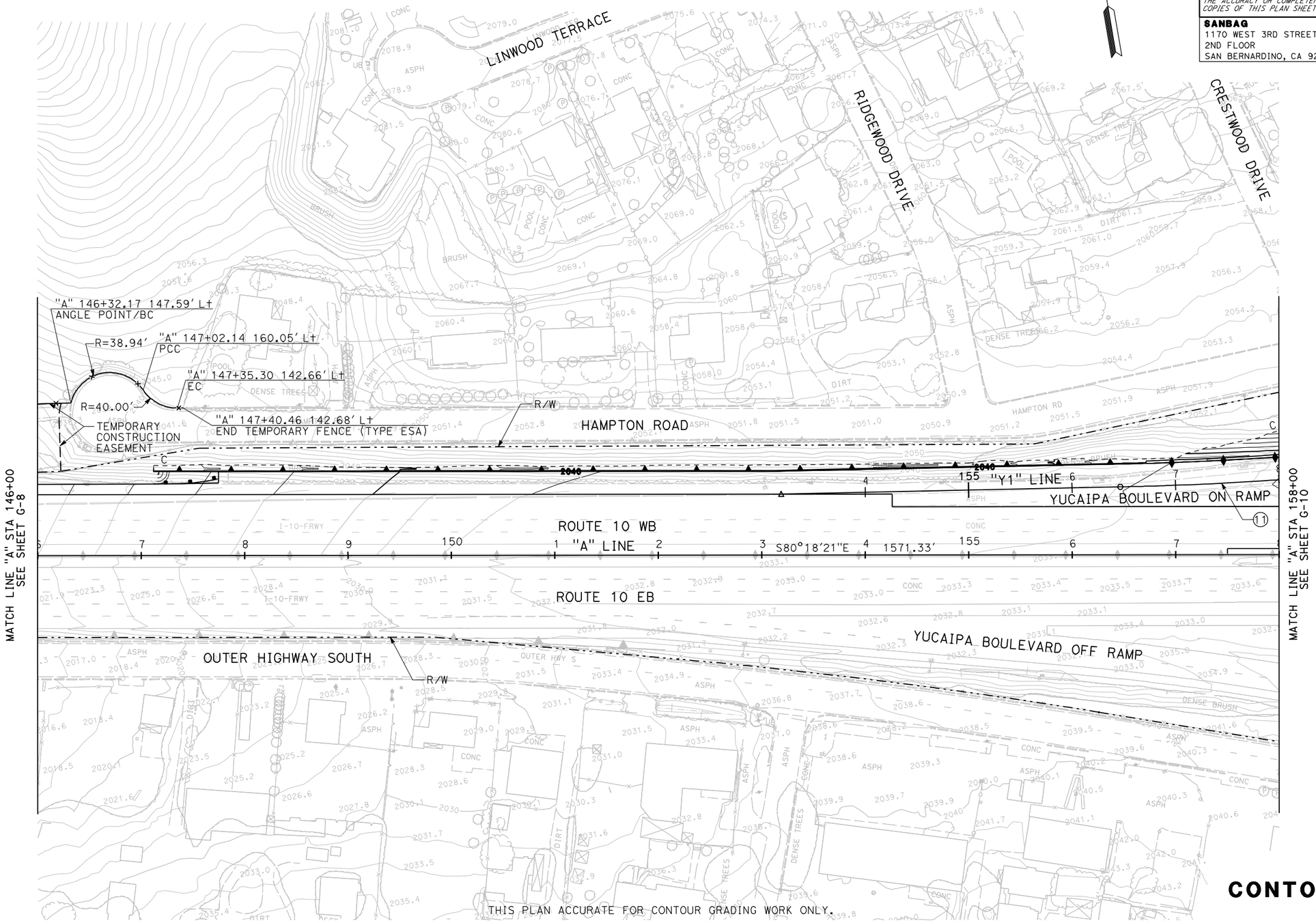

CONTOUR GRADING

SCALE 1"=50′

G-9

REVISED BY | DATE REVISED | CALCULATED-DESIGNED BY | CHECKED BY | CONSULTANT FUNCTIONAL SUPERVISOR: MARK HAGER

STATE OF CALIFORNIA - DEPARTMENT OF TRANSPORTATION

Caltrans

LAST REVISION | DATE PLOTTED => 15-JUL-2009

RELATIVE BORDER SCALE IS IN INCHES 0 1 2 3

USERNAME => dtruong

CU 08220 | EA 0F1504

NOTE:

1. FOR COMPLETE R/W AND ACCURATE ACCESS DATA, SEE R/W RECORD MAPS AT DISTRICT OFFICE.

LEGEND:

ENVIRONMENTALLY SENSITIVE AREA

CURVE DATA

No.	R	Δ	T	L
7	1999.83′	18°16′06"	321.55′	637.63′
8	2999.55′	07°55′46"	207.89′	415.12′
11	3280.83′	4°44′13"	135.70′	271.24′
12	1639.63′	3°52′52"	55.56′	111.07′
13	2999.99′	17°53′51"	135.70′	937.10′

Dist	COUNTY	ROUTE	POST MILES TOTAL PROJECT	SHEET No.	TOTAL SHEETS
8	SBd	10	33.3/R36.9	XXX	XXX

REGISTERED CIVIL ENGINEER DATE

PLANS APPROVAL DATE

REGISTERED PROFESSIONAL ENGINEER No. Exp. CIVIL STATE OF CALIFORNIA

THE STATE OF CALIFORNIA OR ITS OFFICERS OR AGENTS SHALL NOT BE RESPONSIBLE FOR THE ACCURACY OR COMPLETENESS OF ELECTRONIC COPIES OF THIS PLAN SHEET.

SANBAG
1170 WEST 3RD STREET
2ND FLOOR
SAN BERNARDINO, CA 92410

CH2MHILL
2280 MARKET STREET
SUITE 200
RIVERSIDE, CA 92501

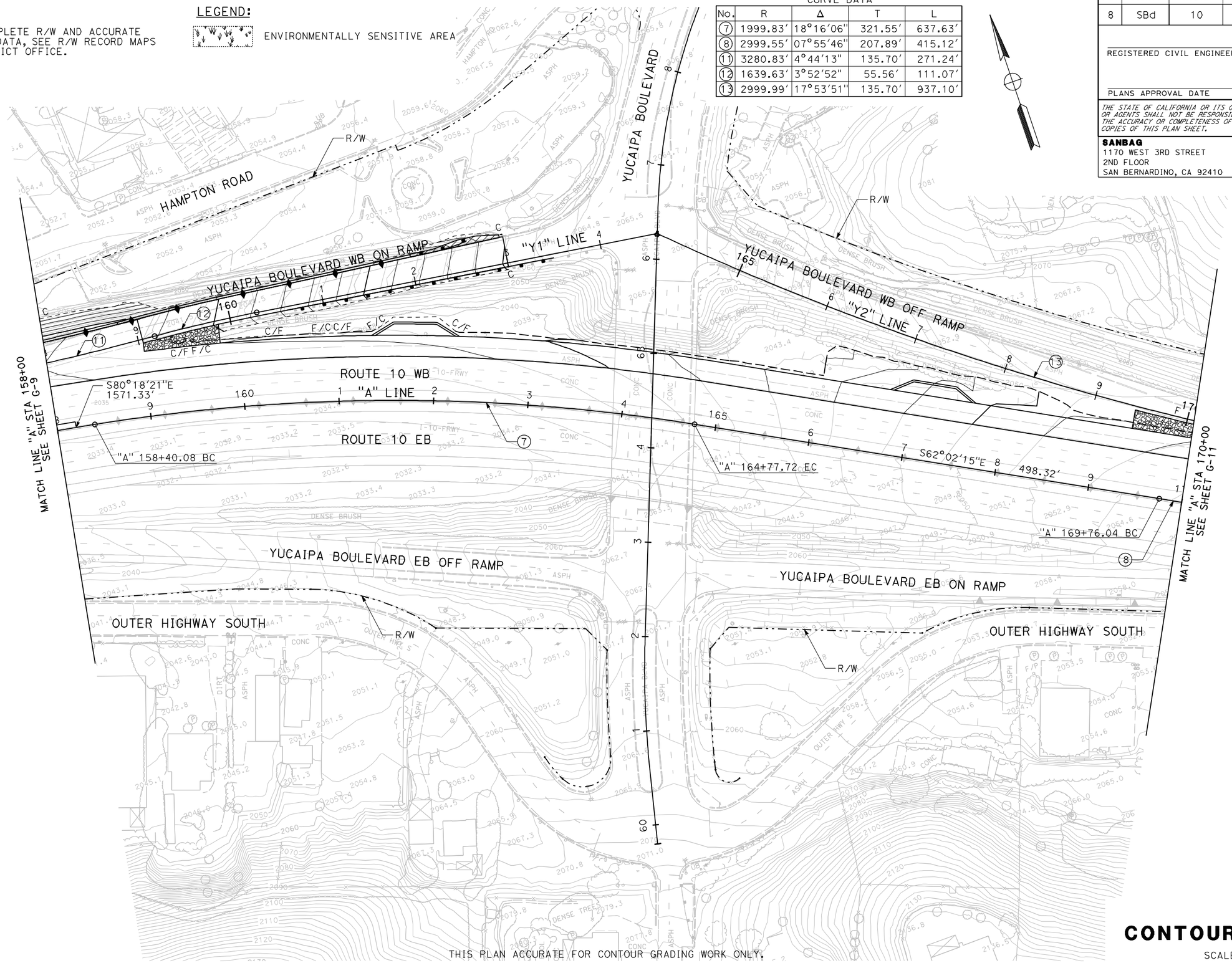

CONTOUR GRADING

SCALE 1"=50′

G-10

STATE OF CALIFORNIA - DEPARTMENT OF TRANSPORTATION

Caltrans

CONSULTANT FUNCTIONAL SUPERVISOR: MARK HAGER

CALCULATED-DESIGNED BY | CHECKED BY

REVISED BY | DATE REVISED

LAST REVISION | DATE PLOTTED => 15-JUL-2009

RELATIVE BORDER SCALE IS IN INCHES 0 1 2 3

USERNAME => atruong

CU 08220

EA 0F1504

Dist	COUNTY	ROUTE	POST MILES TOTAL PROJECT	SHEET No.	TOTAL SHEETS
8	SBd	10	33.3/R36.9	XXX	XXX

REGISTERED CIVIL ENGINEER DATE

PLANS APPROVAL DATE

REGISTERED PROFESSIONAL ENGINEER No. Exp. CIVIL STATE OF CALIFORNIA

THE STATE OF CALIFORNIA OR ITS OFFICERS OR AGENTS SHALL NOT BE RESPONSIBLE FOR THE ACCURACY OR COMPLETENESS OF ELECTRONIC COPIES OF THIS PLAN SHEET.

SANBAG
1170 WEST 3RD STREET
2ND FLOOR
SAN BERNARDINO, CA 92410

CH2MHILL
2280 MARKET STREET
SUITE 200
RIVERSIDE, CA 92501

NOTE:

1. FOR COMPLETE R/W AND ACCURATE ACCESS DATA, SEE R/W RECORD MAPS AT DISTRICT OFFICE.

CURVE DATA

No.	R	Δ	T	L
8	2999.55′	07°55′46"	207.89′	415.12′
9	7963.42′	06°56′10"	482.60′	964.02′
13	2999.99′	17°53′51"	135.70′	937.10′

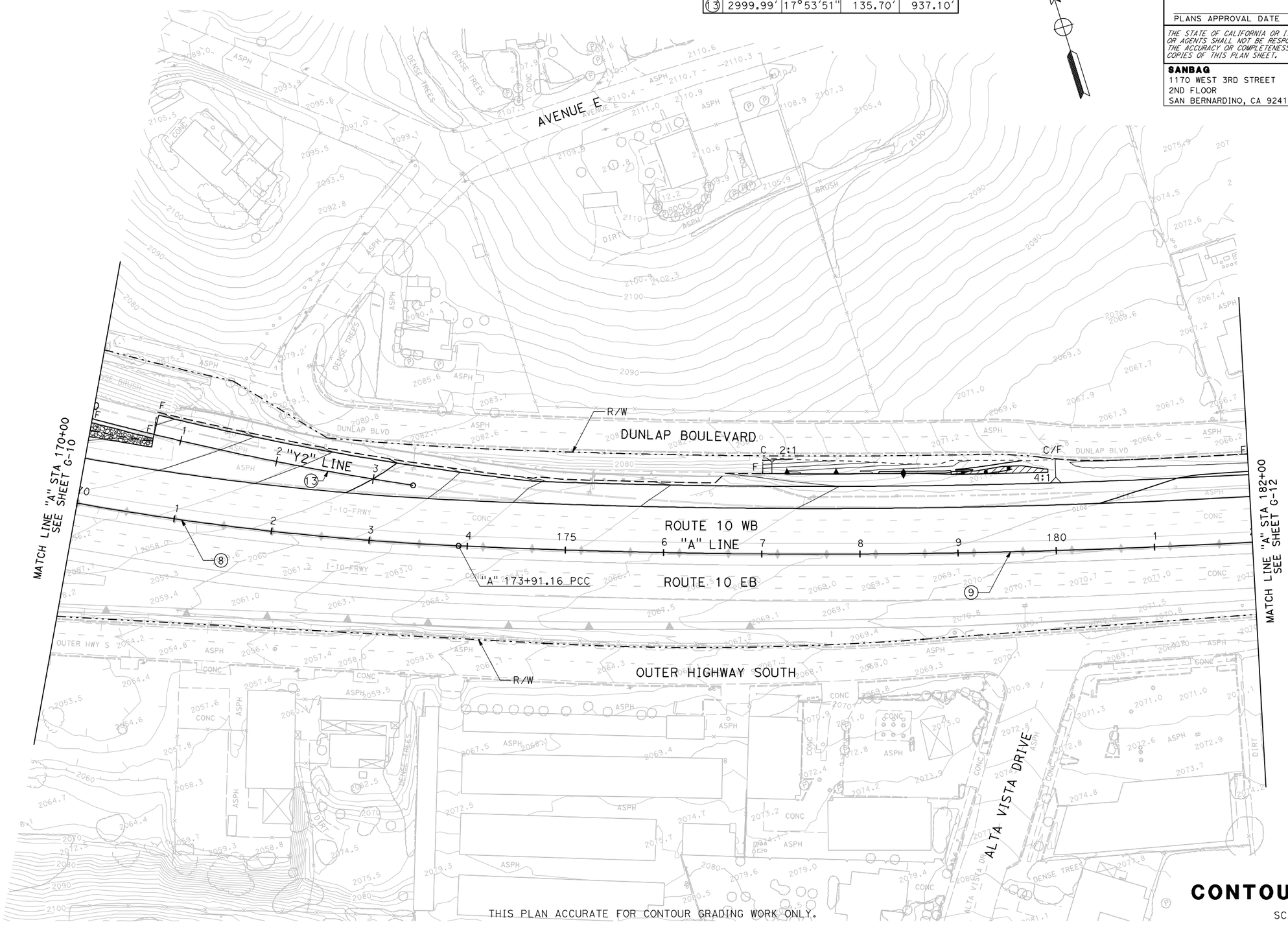

CONTOUR GRADING

SCALE 1"=50′

G-11

STATE OF CALIFORNIA - DEPARTMENT OF TRANSPORTATION

Caltrans

CONSULTANT FUNCTIONAL SUPERVISOR: MARK HAGER

CALCULATED-DESIGNED BY

CHECKED BY

REVISED BY

DATE REVISED

LAST REVISION

DATE PLOTTED => 15-JUL-2009

RELATIVE BORDER SCALE IS IN INCHES 0 1 2 3

USERNAME => atruong

CU 08220

EA 0F1504

NOTE:

1. FOR COMPLETE R/W AND ACCURATE ACCESS DATA, SEE R/W RECORD MAPS AT DISTRICT OFFICE.

CURVE DATA

No.	R	Δ	T	L
9	7963.42′	06°56′10″	482.60′	964.02′

Dist	COUNTY	ROUTE	POST MILES TOTAL PROJECT	SHEET No.	TOTAL SHEETS
8	SBd	10	33.3/R36.9	XXX	XXX

REGISTERED CIVIL ENGINEER DATE

PLANS APPROVAL DATE

REGISTERED PROFESSIONAL ENGINEER No. Exp. CIVIL STATE OF CALIFORNIA

THE STATE OF CALIFORNIA OR ITS OFFICERS OR AGENTS SHALL NOT BE RESPONSIBLE FOR THE ACCURACY OR COMPLETENESS OF ELECTRONIC COPIES OF THIS PLAN SHEET.

SANBAG
1170 WEST 3RD STREET
2ND FLOOR
SAN BERNARDINO, CA 92410

CH2MHILL
2280 MARKET STREET
SUITE 200
RIVERSIDE, CA 92501

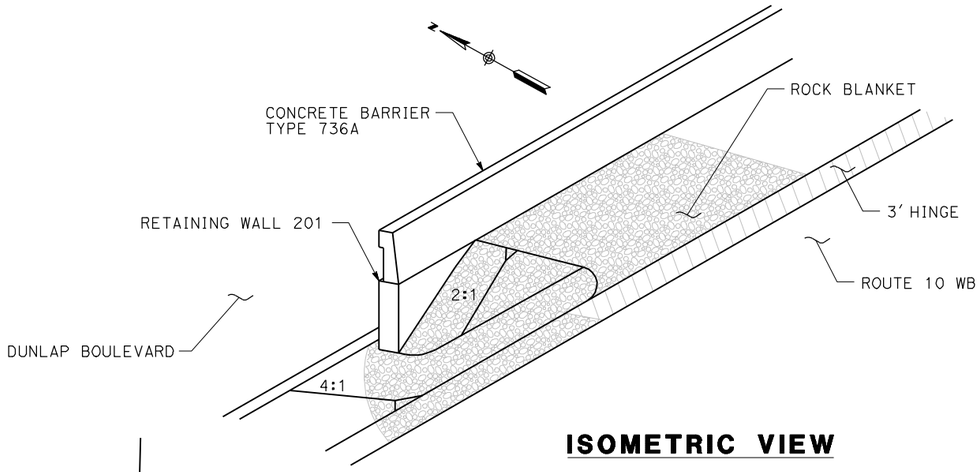

ISOMETRIC VIEW

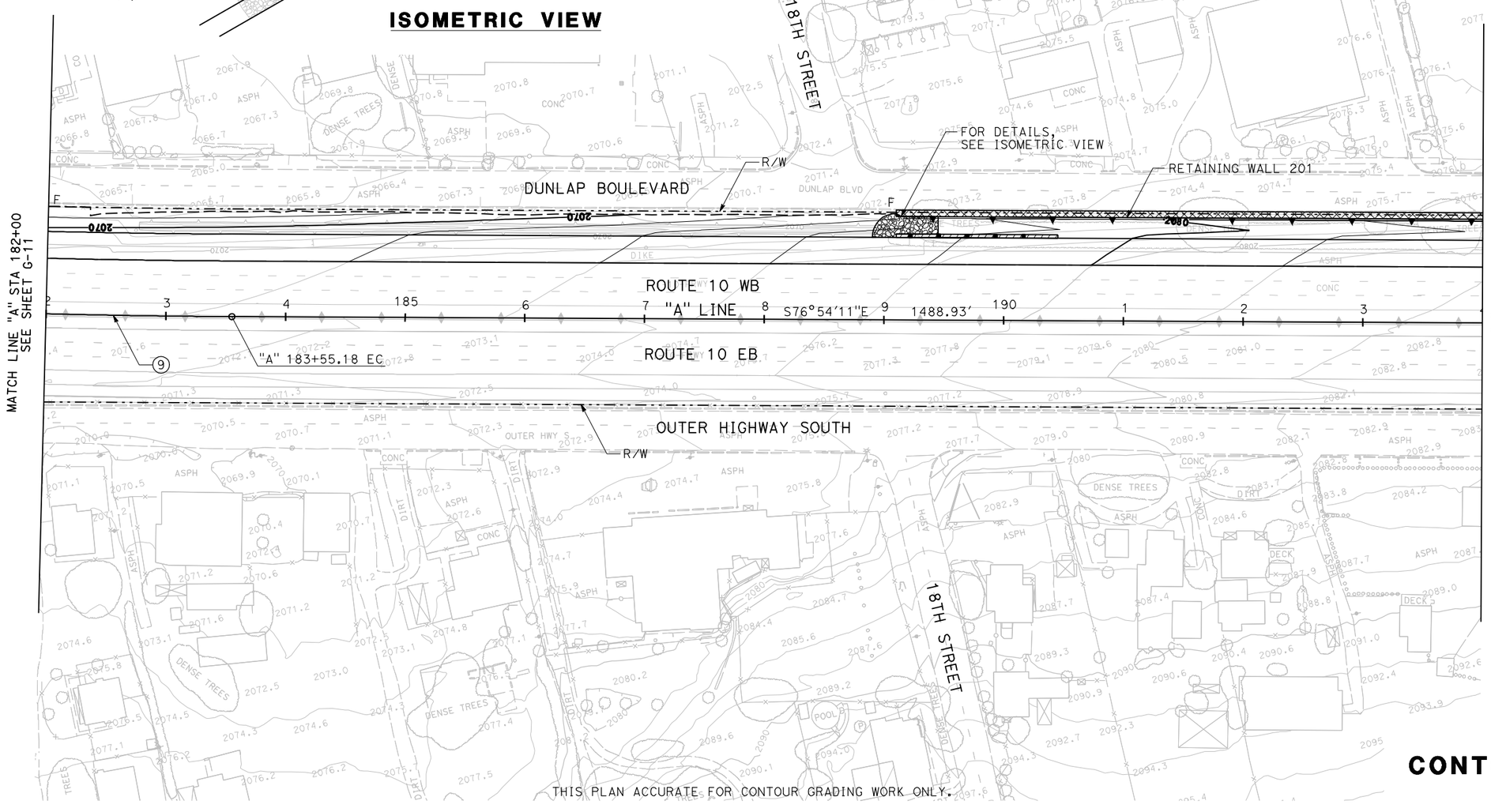

THIS PLAN ACCURATE FOR CONTOUR GRADING WORK ONLY.

CONTOUR GRADING

SCALE 1"=50′

G-12

REVISED BY	DATE REVISED

CALCULATED-DESIGNED BY

CHECKED BY

CONSULTANT FUNCTIONAL SUPERVISOR: MARK HAGER

STATE OF CALIFORNIA - DEPARTMENT OF TRANSPORTATION

Caltrans

LAST REVISION | DATE PLOTTED => 15-JUL-2009

RELATIVE BORDER SCALE IS IN INCHES 0 1 2 3

USERNAME => atruong

CU 08220

EA 0F1504

Dist	COUNTY	ROUTE	POST MILES TOTAL PROJECT	SHEET No.	TOTAL SHEETS
8	SBd	10	33.3/R36.9	XXX	XXX

REGISTERED CIVIL ENGINEER DATE

PLANS APPROVAL DATE

REGISTERED PROFESSIONAL ENGINEER No. Exp. CIVIL STATE OF CALIFORNIA

THE STATE OF CALIFORNIA OR ITS OFFICERS OR AGENTS SHALL NOT BE RESPONSIBLE FOR THE ACCURACY OR COMPLETENESS OF ELECTRONIC COPIES OF THIS PLAN SHEET.

SANBAG
1170 WEST 3RD STREET
2ND FLOOR
SAN BERNARDINO, CA 92410

CH2MHILL
2280 MARKET STREET
SUITE 200
RIVERSIDE, CA 92501

NOTE:

1. FOR COMPLETE R/W AND ACCURATE ACCESS DATA, SEE R/W RECORD MAPS AT DISTRICT OFFICE.

CURVE DATA

No.	R	Δ	T	L
10	2913.09′	23°26′00″	604.15′	1191.42′

THIS PLAN ACCURATE FOR CONTOUR GRADING WORK ONLY.

CONTOUR GRADING

SCALE 1"=50′

G-13

STATE OF CALIFORNIA - DEPARTMENT OF TRANSPORTATION

Caltrans

CONSULTANT FUNCTIONAL SUPERVISOR: MARK HAGER

CALCULATED-DESIGNED BY

CHECKED BY

REVISED BY

DATE REVISED

LAST REVISION 00-00-00 DATE PLOTTED => 15-JUL-2009

RELATIVE BORDER SCALE IS IN INCHES 0 1 2 3

USERNAME => gtruong

CU 08220

EA 0F1504

Dist	COUNTY	ROUTE	POST MILES TOTAL PROJECT	SHEET No.	TOTAL SHEETS
8	SBd	10	33.3/R36.9	XXX	XXX

REGISTERED CIVIL ENGINEER DATE

PLANS APPROVAL DATE

REGISTERED PROFESSIONAL ENGINEER No. Exp. CIVIL STATE OF CALIFORNIA

THE STATE OF CALIFORNIA OR ITS OFFICERS OR AGENTS SHALL NOT BE RESPONSIBLE FOR THE ACCURACY OR COMPLETENESS OF ELECTRONIC COPIES OF THIS PLAN SHEET.

SANBAG
1170 WEST 3RD STREET
2ND FLOOR
SAN BERNARDINO, CA 92410

CH2MHILL
2280 MARKET STREET
SUITE 200
RIVERSIDE, CA 92501

NOTE:

1. FOR COMPLETE R/W AND ACCURATE ACCESS DATA, SEE R/W RECORD MAPS AT DISTRICT OFFICE.

CURVE DATA

No.	R	Δ	T	L
10	2913.09′	23°26′00″	604.15′	1191.42′

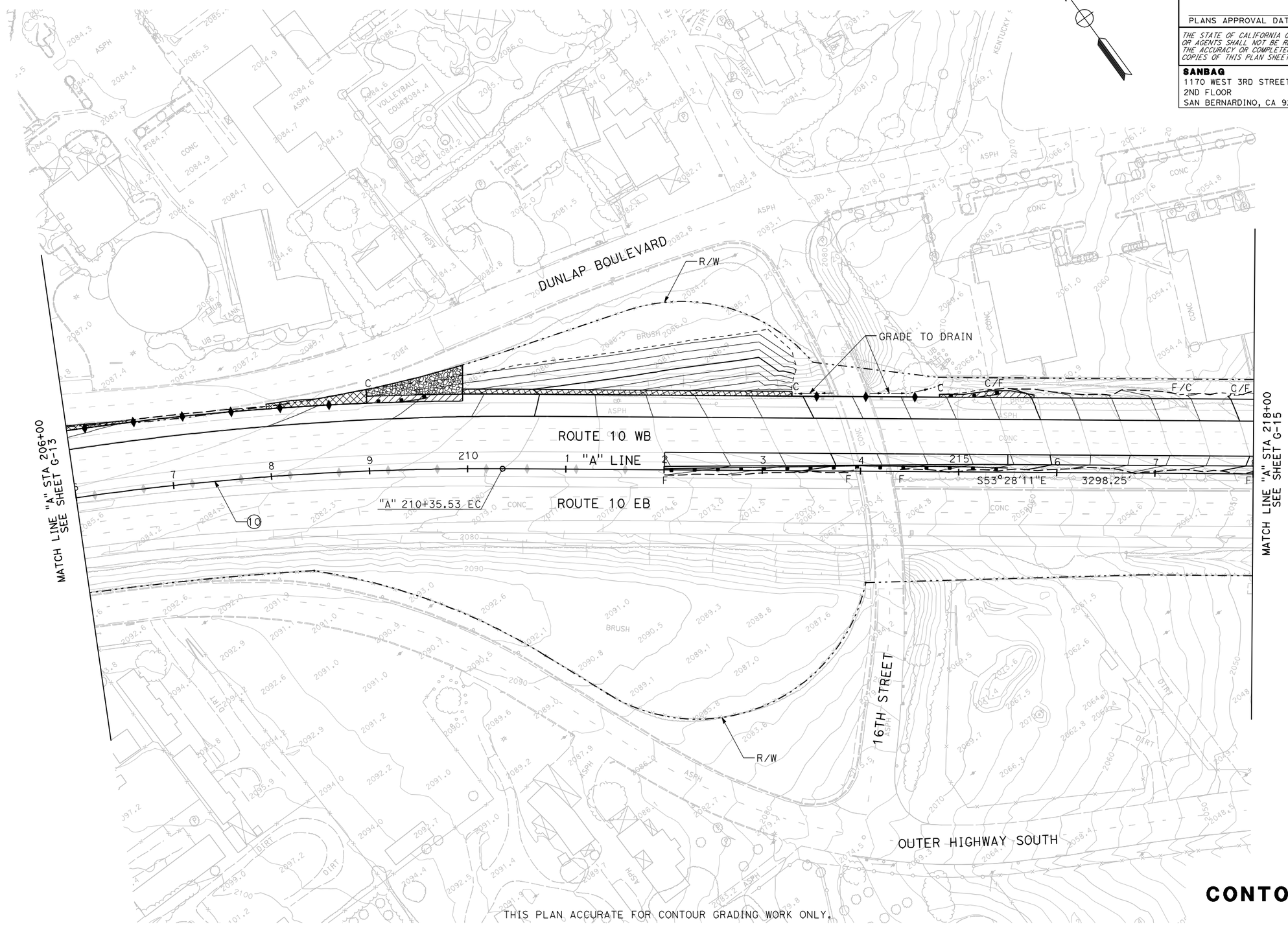

THIS PLAN ACCURATE FOR CONTOUR GRADING WORK ONLY.

CONTOUR GRADING

SCALE 1″=50′

G-14

STATE OF CALIFORNIA - DEPARTMENT OF TRANSPORTATION

Caltrans

CONSULTANT FUNCTIONAL SUPERVISOR: MARK HAGER

CALCULATED-DESIGNED BY

CHECKED BY

REVISED BY

DATE REVISED

LAST REVISION

DATE PLOTTED => 15-JUL-2009

RELATIVE BORDER SCALE IS IN INCHES 0 1 2 3

USERNAME => atruong

CU 08220

EA 0F1504

Dist	COUNTY	ROUTE	POST MILES TOTAL PROJECT	SHEET No.	TOTAL SHEETS
8	SBd	10	33.3/R36.9	XXX	XXX

REGISTERED CIVIL ENGINEER DATE

PLANS APPROVAL DATE

REGISTERED PROFESSIONAL ENGINEER No. Exp. CIVIL STATE OF CALIFORNIA

THE STATE OF CALIFORNIA OR ITS OFFICERS OR AGENTS SHALL NOT BE RESPONSIBLE FOR THE ACCURACY OR COMPLETENESS OF ELECTRONIC COPIES OF THIS PLAN SHEET.

SANBAG
1170 WEST 3RD STREET
2ND FLOOR
SAN BERNARDINO, CA 92410

CH2MHILL
2280 MARKET STREET
SUITE 200
RIVERSIDE, CA 92501

NOTE:

1. FOR COMPLETE R/W AND ACCURATE ACCESS DATA, SEE R/W RECORD MAPS AT DISTRICT OFFICE.

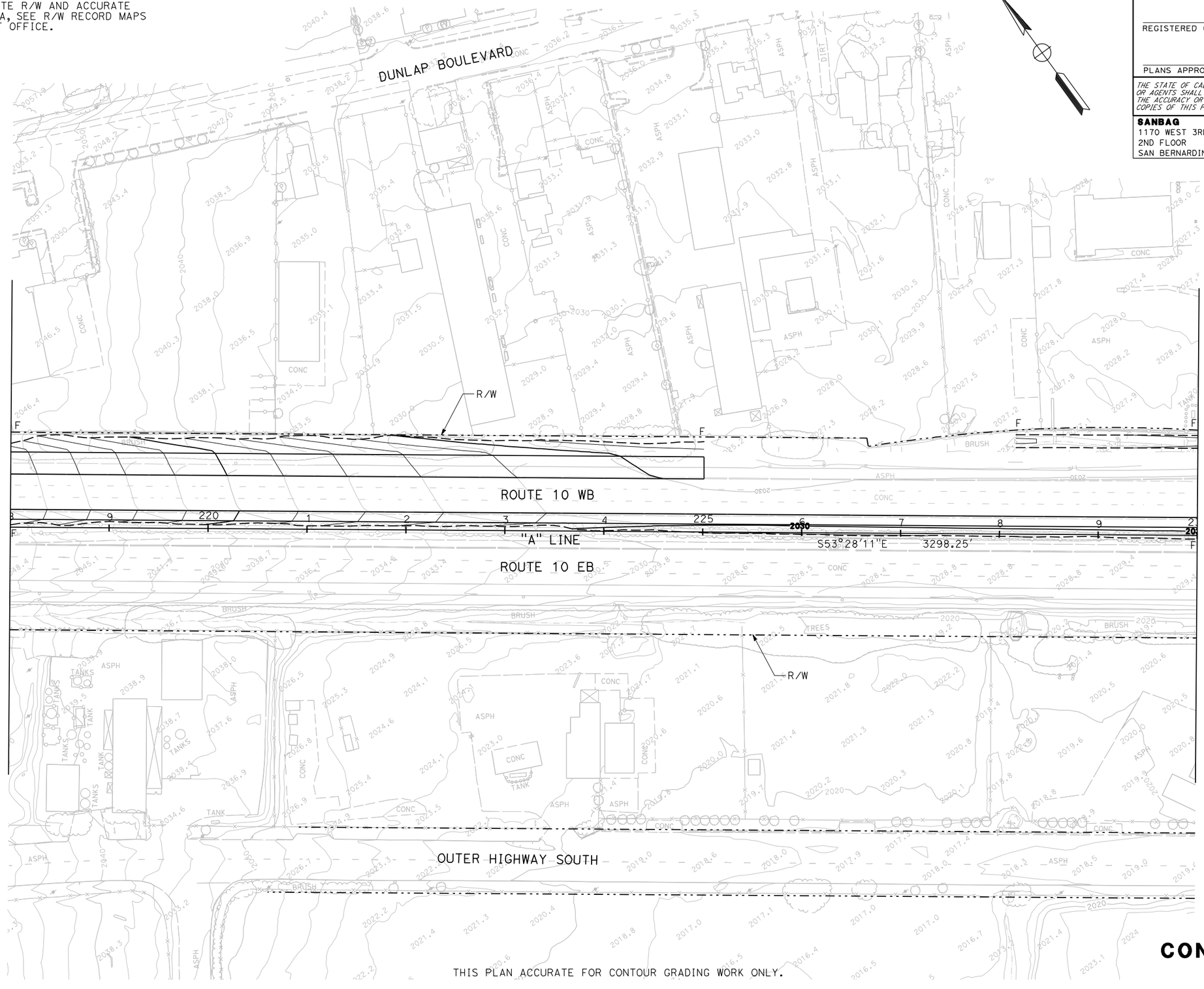

THIS PLAN ACCURATE FOR CONTOUR GRADING WORK ONLY.

CONTOUR GRADING

SCALE 1"=50'

G-15

STATE OF CALIFORNIA - DEPARTMENT OF TRANSPORTATION

Caltrans

CONSULTANT FUNCTIONAL SUPERVISOR: MARK HAGER

CALCULATED-DESIGNED BY

CHECKED BY

REVISED BY

DATE REVISED

LAST REVISION 00-00-00

DATE PLOTTED => 15-JUL-2009

RELATIVE BORDER SCALE IS IN INCHES 0 1 2 3

USERNAME => dtruong

DGN FILE => 0F1504ge015.dgn

CU 08220

EA 0F1504

Dist	COUNTY	ROUTE	POST MILES TOTAL PROJECT	SHEET No.	TOTAL SHEETS
8	SBd	10	33.3/R36.9	XXX	XXX

REGISTERED CIVIL ENGINEER DATE

PLANS APPROVAL DATE

REGISTERED PROFESSIONAL ENGINEER No. Exp. CIVIL STATE OF CALIFORNIA

THE STATE OF CALIFORNIA OR ITS OFFICERS OR AGENTS SHALL NOT BE RESPONSIBLE FOR THE ACCURACY OR COMPLETENESS OF ELECTRONIC COPIES OF THIS PLAN SHEET.

SANBAG
1170 WEST 3RD STREET
2ND FLOOR
SAN BERNARDINO, CA 92410

CH2MHILL
2280 MARKET STREET
SUITE 200
RIVERSIDE, CA 92501

NOTE:

1. FOR COMPLETE R/W AND ACCURATE ACCESS DATA, SEE R/W RECORD MAPS AT DISTRICT OFFICE.

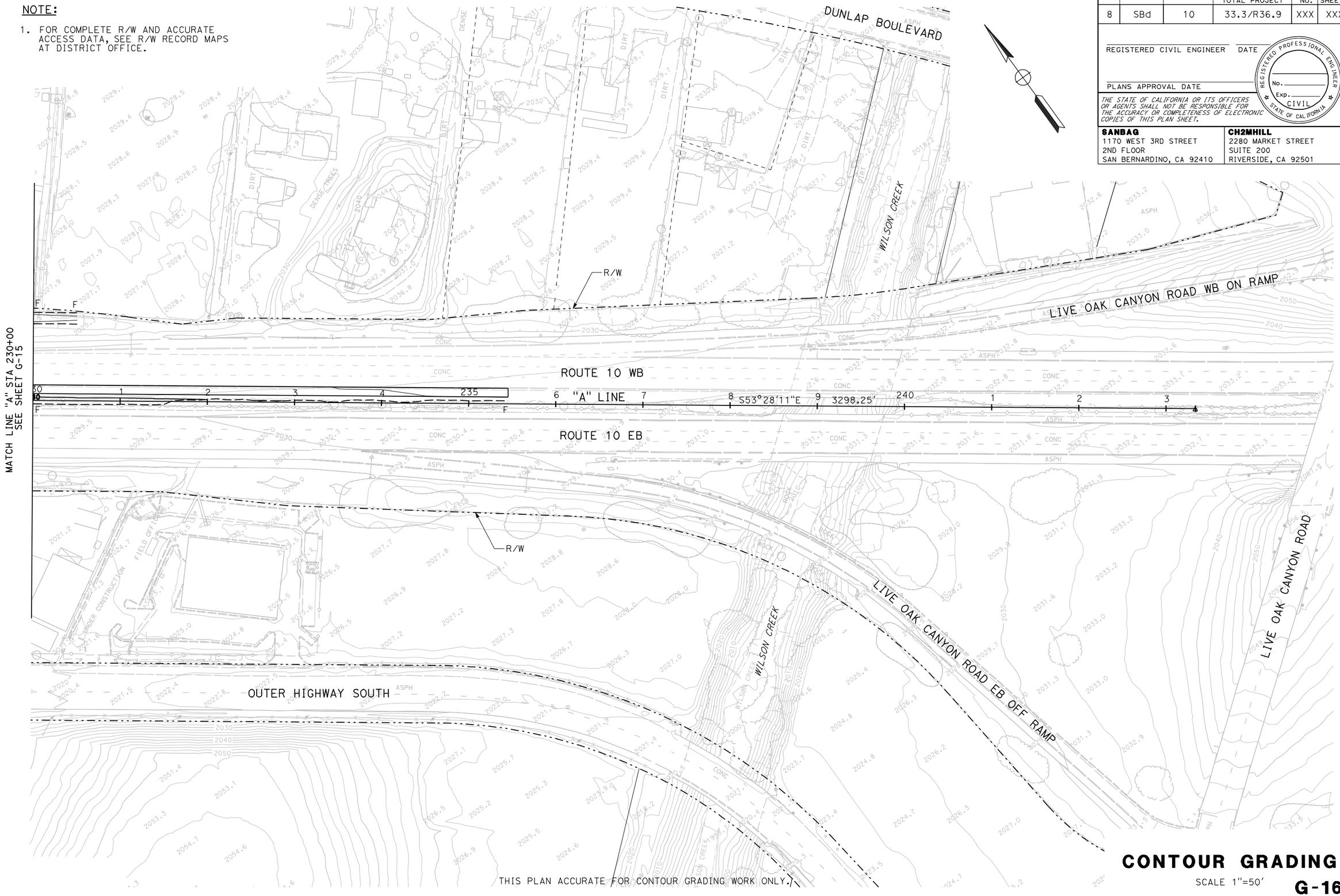

CONTOUR GRADING

SCALE 1"=50'

G-16

STATE OF CALIFORNIA - DEPARTMENT OF TRANSPORTATION

Caltrans

CONSULTANT FUNCTIONAL SUPERVISOR: MARK HAGER

CALCULATED-DESIGNED BY

CHECKED BY

REVISED BY

DATE REVISED

LAST REVISION

DATE PLOTTED => 15-JUL-2009

RELATIVE BORDER SCALE IS IN INCHES 0 1 2 3

USERNAME => dtruong

CU 08220

EA 0F1504

Dist	COUNTY	ROUTE	POST MILES TOTAL PROJECT	SHEET No.	TOTAL SHEETS
8	SBd	10	33.3/R36.9	XXX	XXX

REGISTERED CIVIL ENGINEER DATE

PLANS APPROVAL DATE

REGISTERED PROFESSIONAL ENGINEER GERARD F. DALZIEL No. 36333 Exp. 6/30/10 CIVIL STATE OF CALIFORNIA

THE STATE OF CALIFORNIA OR ITS OFFICERS OR AGENTS SHALL NOT BE RESPONSIBLE FOR THE ACCURACY OR COMPLETENESS OF ELECTRONIC COPIES OF THIS PLAN SHEET.

SANBAG
1170 WEST 3RD STREET
2ND FLOOR
SAN BERNARDINO, CA 92410

AECOM
999 W. TOWN & COUNTRY RD
ORANGE, CA 92868

ABBREVIATIONS

GLD	GRATED LINE DRAIN
SDDS	SEE DRAINAGE DETAIL SHEETS
W/	WITH

LEGEND

- DRAINAGE INLET
- CONCRETE APRON
- 2 DRAINAGE SYSTEM No.
- a DRAINAGE UNIT
- DRAINAGE CULVERT
- BIOFILTRATION SWALE
- JUNCTION STRUCTURE

1
- a JUNCTION STRUCTURE, Hb=5.40′, W/MH F & C (SDDS)
- b 24" x 9.50′ APC
- c GCP INLET W/36R GRATE, H=4.21′
- d CONCRETE APRON - TYPE A (SDDS)
- e 592.09′ BIOFILTRATION SWALE (SDDS)
- f CONCRETE SPILLWAY (SDDS)

2
- a 18" x 5.00′ AP RISER W/J-1 COLLAR, SAFETY CAGE (SDDS)
- b GT3 INLET W/2x24-12 GRATES, H=2.64′, SIDE OPENING (SDDS)
- c REMOVE CULVERT (12" x 3.00′ CSP RISER)
- d REMOVE INLET
- e REMOVE INLET

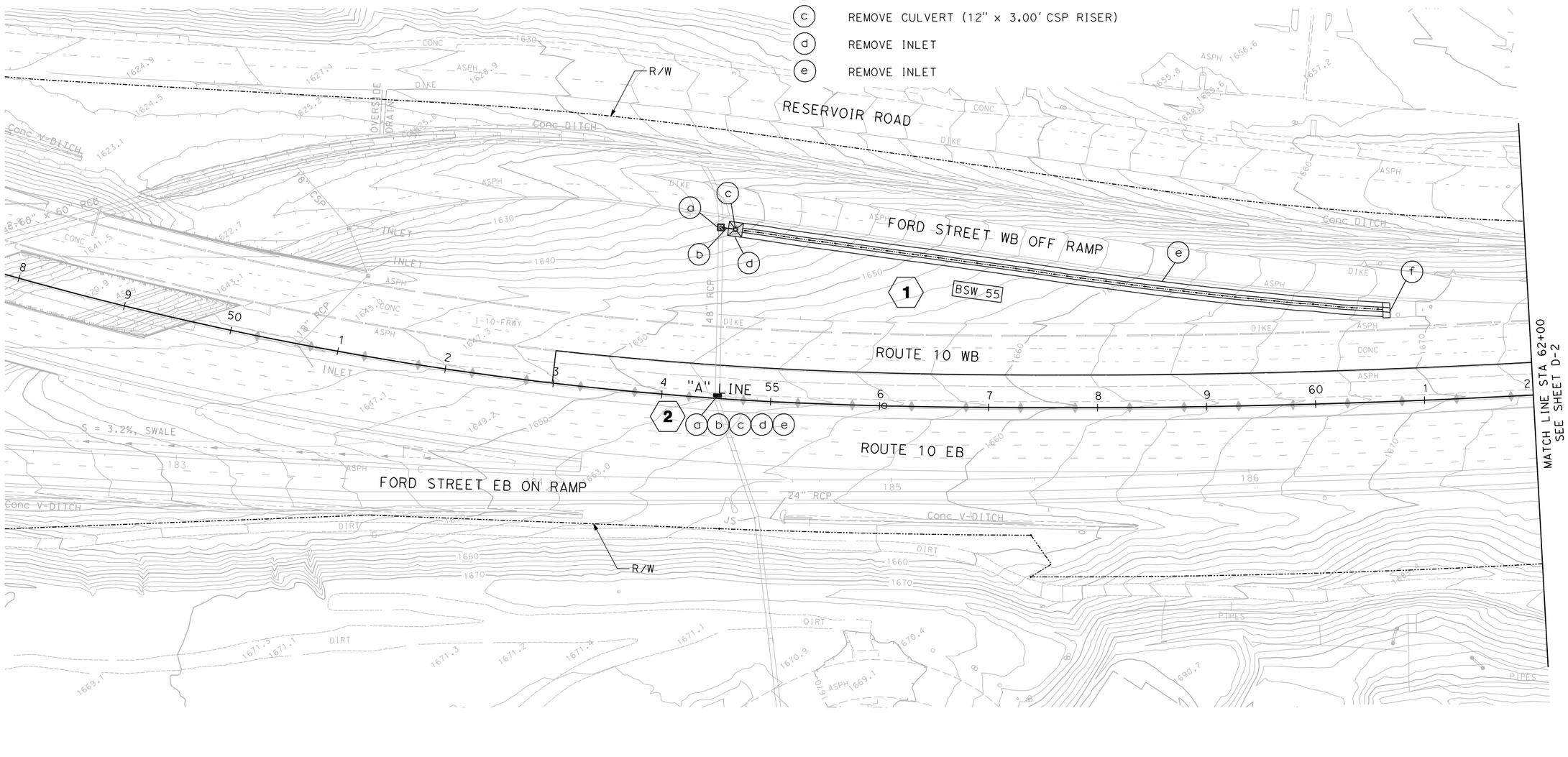

THIS PLAN ACCURATE FOR DRAINAGE WORK ONLY.

DRAINAGE PLAN

SCALE 1"=50′

D-1

STATE OF CALIFORNIA - DEPARTMENT OF TRANSPORTATION

Caltrans

CONSULTANT FUNCTIONAL SUPERVISOR: ED KOUZI

CALCULATED-DESIGNED BY: GREG KEPPLER

CHECKED BY: GLENN YAMANAKA

REVISED BY

DATE REVISED

LAST REVISION 11-25-08

DATE PLOTTED => 6/30/2009
TIME PLOTTED => 5:27:25 PM

RELATIVE BORDER SCALE IS IN INCHES 0 1 2 3

USERNAME => YamanakaG
DGN FILE => ...\0f150ia01.dgn

CU 08220

EA 0F1500

Dist	COUNTY	ROUTE	POST MILES TOTAL PROJECT	SHEET No.	TOTAL SHEETS
8	SBd	10	33.3/R36.9	XXX	XXX

REGISTERED CIVIL ENGINEER DATE

PLANS APPROVAL DATE

REGISTERED PROFESSIONAL ENGINEER GERARD F. DALZIEL No. 36333 Exp 6/30/10 CIVIL STATE OF CALIFORNIA

THE STATE OF CALIFORNIA OR ITS OFFICERS OR AGENTS SHALL NOT BE RESPONSIBLE FOR THE ACCURACY OR COMPLETENESS OF ELECTRONIC COPIES OF THIS PLAN SHEET.

SANBAG
1170 WEST 3RD STREET
2ND FLOOR
SAN BERNARDINO, CA 92410

AECOM
999 W. TOWN & COUNTRY RD
ORANGE, CA 92868

3 a ABANDON INLET

4 a 45.00' GLD

b ABANDON INLET

THIS PLAN ACCURATE FOR DRAINAGE WORK ONLY.

DRAINAGE PLAN

SCALE 1"=50'

D-2

STATE OF CALIFORNIA - DEPARTMENT OF TRANSPORTATION

Caltrans

CONSULTANT FUNCTIONAL SUPERVISOR: ED KOUZI

CALCULATED-DESIGNED BY: GREG KEPPLER

CHECKED BY: GLENN YAMANAKA

REVISED BY

DATE REVISED

LAST REVISION 11-25-08

DATE PLOTTED => 6/30/2009
TIME PLOTTED => 5:27:30 PM

RELATIVE BORDER SCALE IS IN INCHES 0 1 2 3

USERNAME => YamanakaG
DGN FILE => ...\0f150ia02.dgn

CU 08220

EA 0F1500

Dist	COUNTY	ROUTE	POST MILES TOTAL PROJECT	SHEET No.	TOTAL SHEETS
8	SBd	10	33.3/R36.9	XXX	XXX

REGISTERED CIVIL ENGINEER DATE

PLANS APPROVAL DATE

REGISTERED PROFESSIONAL ENGINEER GERARD F. DALZIEL No. 36333 Exp 6/30/10 CIVIL STATE OF CALIFORNIA

THE STATE OF CALIFORNIA OR ITS OFFICERS OR AGENTS SHALL NOT BE RESPONSIBLE FOR THE ACCURACY OR COMPLETENESS OF ELECTRONIC COPIES OF THIS PLAN SHEET.

SANBAG
1170 WEST 3RD STREET
2ND FLOOR
SAN BERNARDINO, CA 92410

AECOM
999 W. TOWN & COUNTRY RD
ORANGE, CA 92868

5 a ABANDON INLET

THIS PLAN ACCURATE FOR DRAINAGE WORK ONLY.

DRAINAGE PLAN

SCALE 1"=50'

D-3

STATE OF CALIFORNIA - DEPARTMENT OF TRANSPORTATION

Caltrans

CONSULTANT FUNCTIONAL SUPERVISOR: ED KOUZI

CALCULATED-DESIGNED BY: GREG KEPPLER

CHECKED BY: GLENN YAMANAKA

REVISED BY

DATE REVISED

LAST REVISION 11-25-08

DATE PLOTTED => 6/30/2009
TIME PLOTTED => 5:27:32 PM

RELATIVE BORDER SCALE IS IN INCHES 0 1 2 3

USERNAME => YamanakaG
DGN FILE => ...\0f150ia03.dgn

CU 08220

EA 0F1500

Dist	COUNTY	ROUTE	POST MILES TOTAL PROJECT	SHEET No.	TOTAL SHEETS
8	SBd	10	33.3/R36.9	XXX	XXX

REGISTERED CIVIL ENGINEER DATE

PLANS APPROVAL DATE

REGISTERED PROFESSIONAL ENGINEER GERARD F. DALZIEL No. 36333 Exp 6/30/10 CIVIL STATE OF CALIFORNIA

THE STATE OF CALIFORNIA OR ITS OFFICERS OR AGENTS SHALL NOT BE RESPONSIBLE FOR THE ACCURACY OR COMPLETENESS OF ELECTRONIC COPIES OF THIS PLAN SHEET.

SANBAG
1170 WEST 3RD STREET
2ND FLOOR
SAN BERNARDINO, CA 92410

AECOM
999 W. TOWN & COUNTRY RD
ORANGE, CA 92868

6

(a)	24" x 105.34' APC W/CHANNEL CONNECTION (SDDS)	(g)	24" x 245.36' APC
(b)	G2 INLET W/24-12 GRATE, H=5.38'	(h)	G2 INLET W/24-12 GRATE, H=5.29'
(c)	40.00' GLD	(i)	40.00' GLD
(d)	24" x 293.58' APC	(j)	24" x 285.56' APC
(e)	G2 INLET W/24-12 GRATE, H=5.30'	(k)	G2 INLET W/24-12 GRATE, H=5.28'
(f)	40.00' GLD	(l)	40.00' GLD

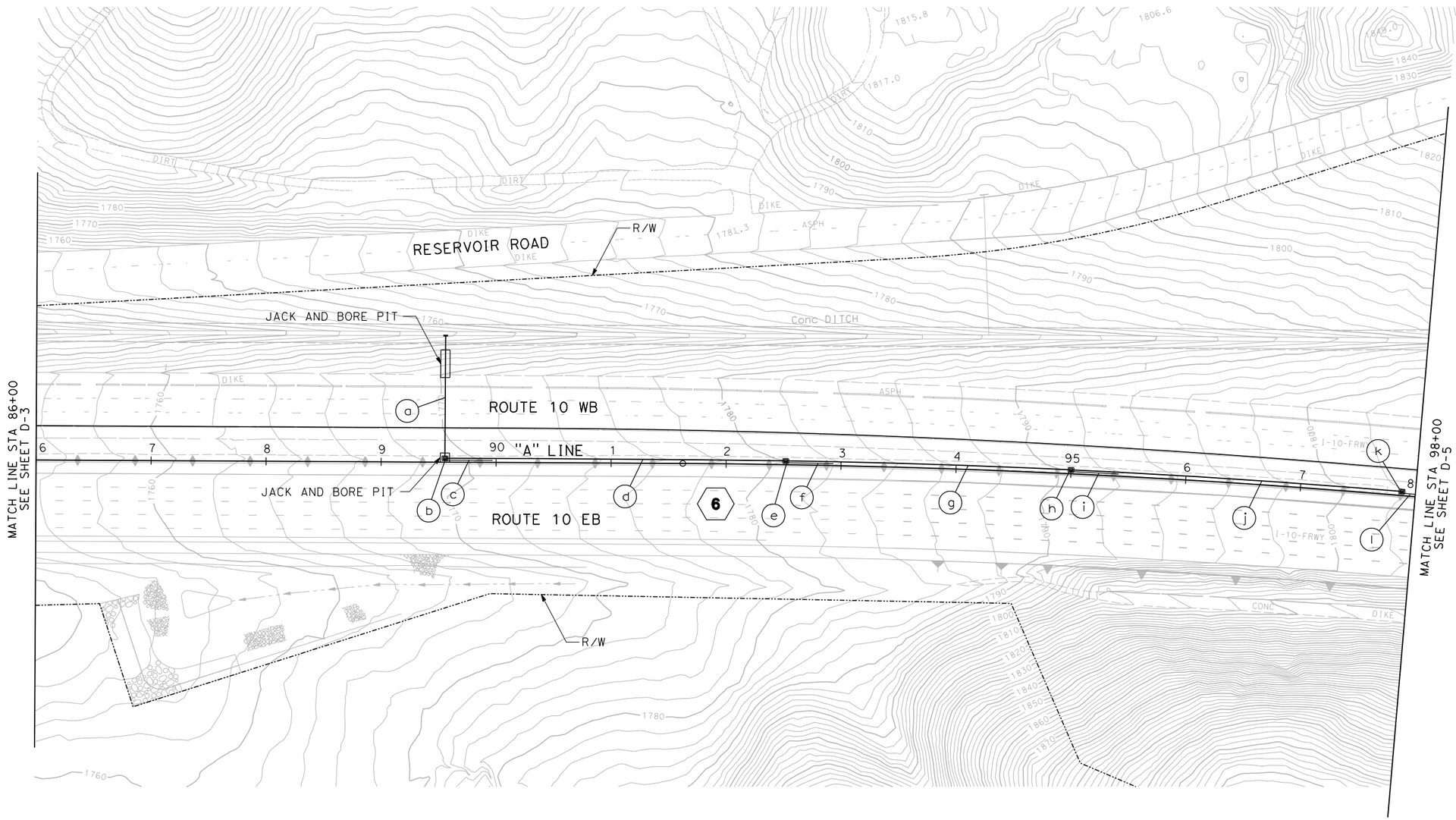

THIS PLAN ACCURATE FOR DRAINAGE WORK ONLY.

DRAINAGE PLAN

SCALE 1"=50'

D-4

REVISED BY	DATE REVISED

GREG KEPPLER — GLENN YAMANAKA

CALCULATED-DESIGNED BY — CHECKED BY

CONSULTANT FUNCTIONAL SUPERVISOR — ED KOUZI

STATE OF CALIFORNIA - DEPARTMENT OF TRANSPORTATION

Caltrans

LAST REVISION 11-25-08

DATE PLOTTED => 6/30/2009
TIME PLOTTED => 5:27:35 PM

RELATIVE BORDER SCALE IS IN INCHES 0 1 2 3

USERNAME => YamanakaG
DGN FILE => ...\0f150ia04.dgn

CU 08220

EA 0F1500

Dist	COUNTY	ROUTE	POST MILES TOTAL PROJECT	SHEET No.	TOTAL SHEETS
8	SBd	10	33.3/R36.9	XXX	XXX

REGISTERED CIVIL ENGINEER DATE

PLANS APPROVAL DATE

REGISTERED PROFESSIONAL ENGINEER GERARD F. DALZIEL No. 36333 Exp. 6/30/10 CIVIL STATE OF CALIFORNIA

THE STATE OF CALIFORNIA OR ITS OFFICERS OR AGENTS SHALL NOT BE RESPONSIBLE FOR THE ACCURACY OR COMPLETENESS OF ELECTRONIC COPIES OF THIS PLAN SHEET.

SANBAG
1170 WEST 3RD STREET
2ND FLOOR
SAN BERNARDINO, CA 92410

AECOM
999 W. TOWN & COUNTRY RD
ORANGE, CA 92868

6 (l) 40.00' GLD

7 (a) G2 INLET W/24-12 GRATE, H=4.91'
(b) 25.00' GLD
(c) 24" x 82.98' APC
(d) G2 INLET W/24-12 GRATE, H=5.74'
(e) 45.00' GLD
(f) 24" x 248.67' APC
(g) G2 INLET W/24-12 GRATE, H=4.74'
(h) 45.00' GLD
(i) REMOVE INLET

THIS PLAN ACCURATE FOR DRAINAGE WORK ONLY.

DRAINAGE PLAN

SCALE 1"=50'

D-5

REVISED BY	DATE REVISED
GREG KEPPLER	GLENN YAMANAKA

CALCULATED-DESIGNED BY
CHECKED BY

CONSULTANT FUNCTIONAL SUPERVISOR: ED KOUZI

STATE OF CALIFORNIA - DEPARTMENT OF TRANSPORTATION

Caltrans

LAST REVISION 11-25-08

DATE PLOTTED => 6/30/2009
TIME PLOTTED => 5:27:38 PM

RELATIVE BORDER SCALE IS IN INCHES 0 1 2 3

USERNAME => YamanakaG
DGN FILE => ...\0f1501a05.dgn

CU 08220

EA 0F1500

Dist	COUNTY	ROUTE	POST MILES TOTAL PROJECT	SHEET No.	TOTAL SHEETS
8	SBd	10	33.3/R36.9	XXX	XXX

REGISTERED CIVIL ENGINEER DATE

PLANS APPROVAL DATE

REGISTERED PROFESSIONAL ENGINEER GERARD F. DALZIEL No. 36333 Exp 6/30/10 CIVIL STATE OF CALIFORNIA

THE STATE OF CALIFORNIA OR ITS OFFICERS OR AGENTS SHALL NOT BE RESPONSIBLE FOR THE ACCURACY OR COMPLETENESS OF ELECTRONIC COPIES OF THIS PLAN SHEET.

SANBAG
1170 WEST 3RD STREET
2ND FLOOR
SAN BERNARDINO, CA 92410

AECOM
999 W. TOWN & COUNTRY RD
ORANGE, CA 92868

8 a CAP INLET (SDDS)

9 a CAP INLET (SDDS)

10 a G1 INLET W/24-12 GRATE, H=2.56'

b 40.00' GLD

c REMOVE INLET

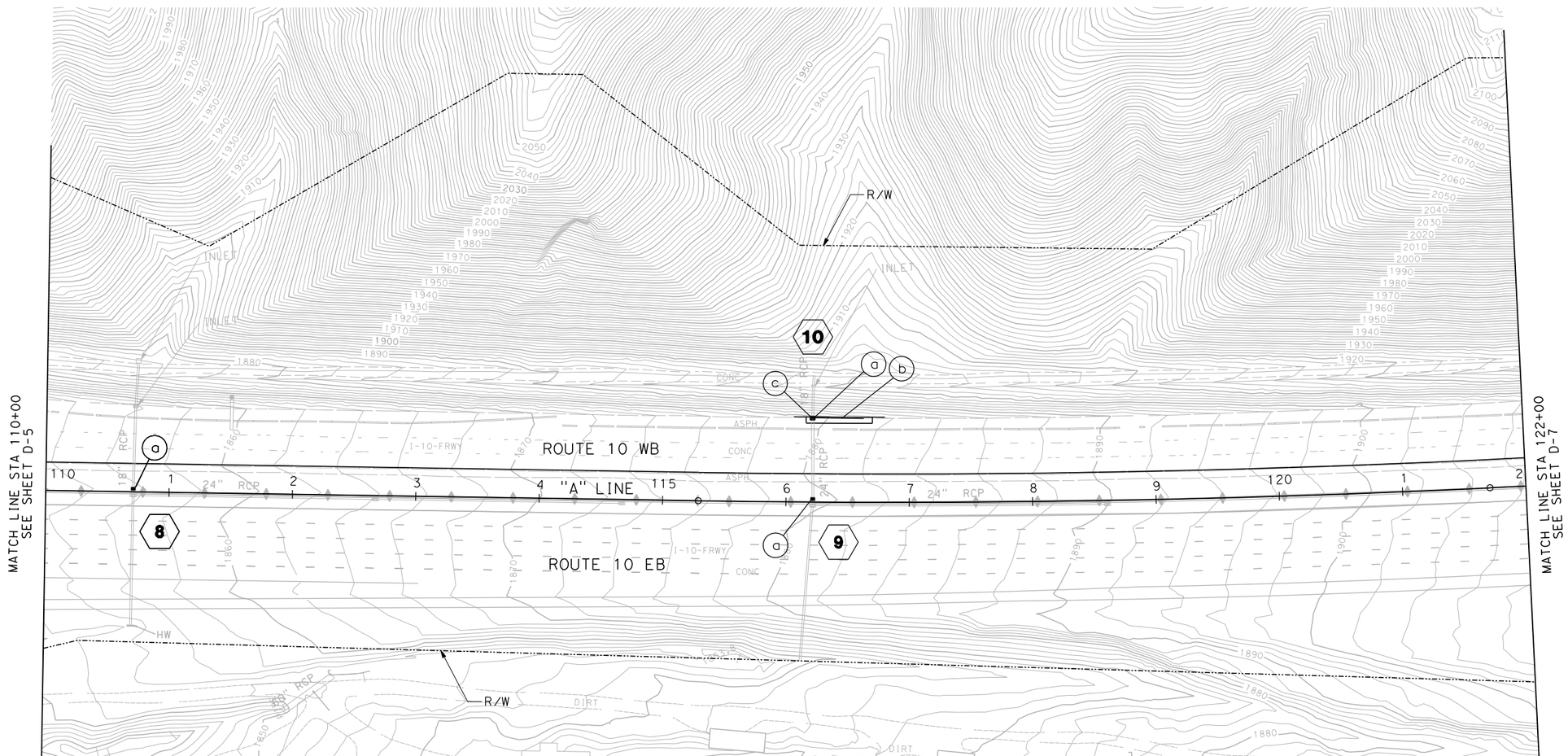

THIS PLAN ACCURATE FOR DRAINAGE WORK ONLY.

DRAINAGE PLAN

SCALE 1"=50'

D-6

REVISED BY	DATE REVISED

GREG KEPPLER — GLENN YAMANAKA

CALCULATED-DESIGNED BY — CHECKED BY

CONSULTANT FUNCTIONAL SUPERVISOR — ED KOUZI

STATE OF CALIFORNIA - DEPARTMENT OF TRANSPORTATION

Caltrans

LAST REVISION 11-25-08 — DATE PLOTTED => 6/30/2009 — TIME PLOTTED => 5:27:39 PM

RELATIVE BORDER SCALE IS IN INCHES 0 1 2 3

USERNAME => YamanakaG
DGN FILE => ...\0f150ia06.dgn

CU 08220 | EA 0F1500

Dist	COUNTY	ROUTE	POST MILES TOTAL PROJECT	SHEET No.	TOTAL SHEETS
8	SBd	10	33.3/R36.9	XXX	XXX

REGISTERED CIVIL ENGINEER DATE

PLANS APPROVAL DATE

REGISTERED PROFESSIONAL ENGINEER GERARD F. DALZIEL No. 36333 Exp. 6/30/10 CIVIL STATE OF CALIFORNIA

THE STATE OF CALIFORNIA OR ITS OFFICERS OR AGENTS SHALL NOT BE RESPONSIBLE FOR THE ACCURACY OR COMPLETENESS OF ELECTRONIC COPIES OF THIS PLAN SHEET.

SANBAG
1170 WEST 3RD STREET
2ND FLOOR
SAN BERNARDINO, CA 92410

AECOM
999 W. TOWN & COUNTRY RD
ORANGE, CA 92868

11
- (a) G1 INLET W/24-12 GRATE, H=4.24′
- (b) 55.00′ GLD
- (c) REMOVE INLET

12
- (a) 18" x 7.35′ AP RISER W/J-1 COLLAR, SAFETY CAGE (SDDS)
- (b) G1 INLET W/24-12 GRATE, H=2.40′
- (c) 45.00′ GLD

13
- (a) 18" x 5.82′ AP RISER W/J-1 COLLAR, SAFETY CAGE (SDDS)
- (b) G1 INLET W/24-12 GRATE, H=2.37′
- (c) 45.00′ GLD

14
- (a) 36" x 10.72′ APC W/L-2 COLLAR (SDDS)
- (b) "L" HEADWALL, W=9.33′
- (c) JUNCTION STRUCTURE, Hb=3.04′ (SDDS)
- (e) G1 INLET W/24-12 GRATE, H=3.85′
- (l) REMOVE HEADWALL

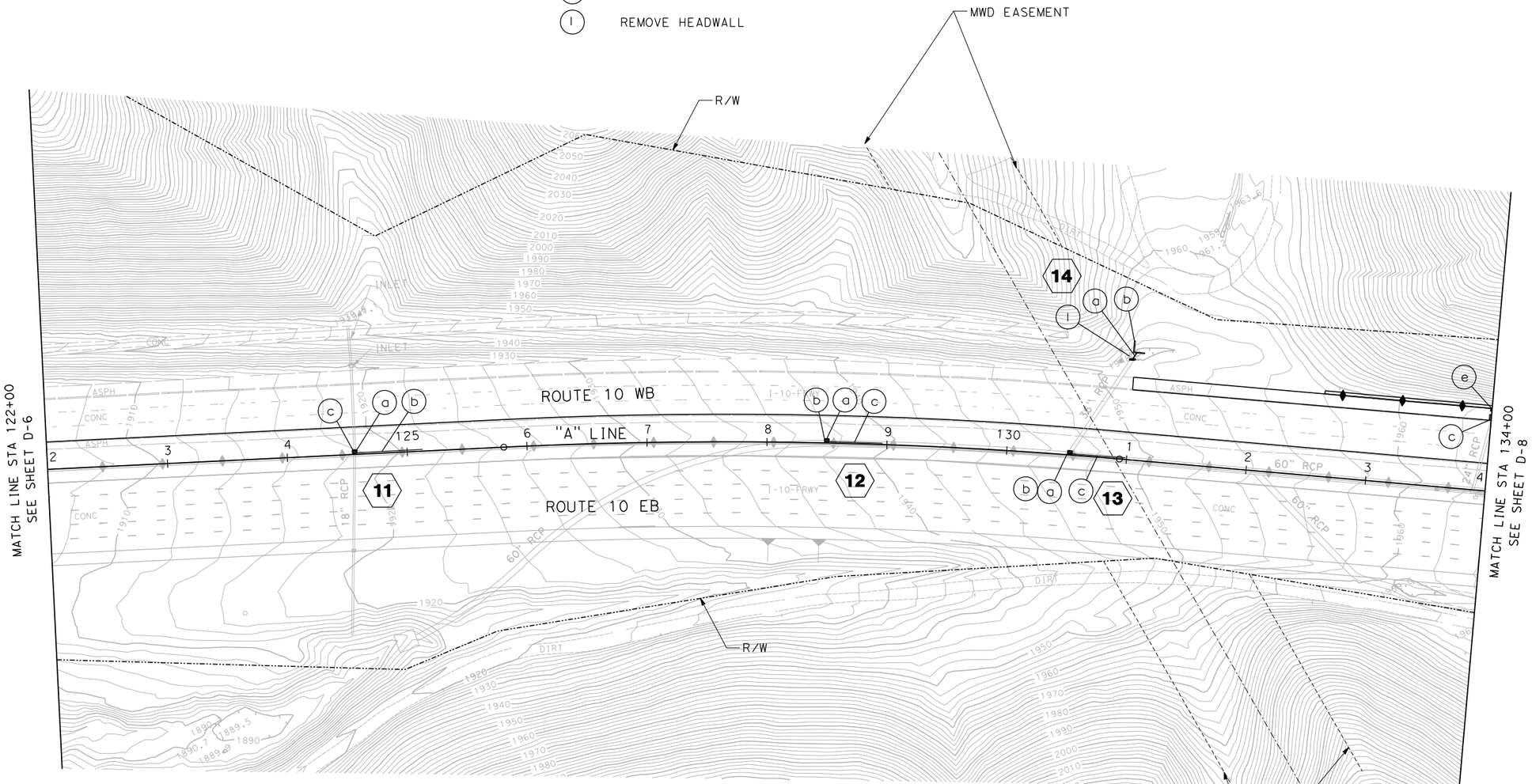

THIS PLAN ACCURATE FOR DRAINAGE WORK ONLY.

DRAINAGE PLAN

SCALE 1"=50′

D-7

STATE OF CALIFORNIA - DEPARTMENT OF TRANSPORTATION

Caltrans

CONSULTANT FUNCTIONAL SUPERVISOR: ED KOUZI

CALCULATED-DESIGNED BY: GREG KEPPLER

CHECKED BY: GLENN YAMANAKA

REVISED BY

DATE REVISED

LAST REVISION 11-25-08

DATE PLOTTED => 6/30/2009
TIME PLOTTED => 5:27:41 PM

RELATIVE BORDER SCALE IS IN INCHES 0 1 2 3

USERNAME => YamanakaG
DGN FILE => ...\0f150ia07.dgn

CU 08220

EA 0F1500

Dist	COUNTY	ROUTE	POST MILES TOTAL PROJECT	SHEET No.	TOTAL SHEETS
8	SBd	10	33.3/R36.9	XXX	XXX

REGISTERED CIVIL ENGINEER DATE

PLANS APPROVAL DATE

REGISTERED PROFESSIONAL ENGINEER GERARD F. DALZIEL No. 36333 Exp 6/30/10 CIVIL STATE OF CALIFORNIA

THE STATE OF CALIFORNIA OR ITS OFFICERS OR AGENTS SHALL NOT BE RESPONSIBLE FOR THE ACCURACY OR COMPLETENESS OF ELECTRONIC COPIES OF THIS PLAN SHEET.

SANBAG
1170 WEST 3RD STREET
2ND FLOOR
SAN BERNARDINO, CA 92410

AECOM
999 W. TOWN & COUNTRY RD
ORANGE, CA 92868

14 (c) JUNCTION STRUCTURE, Hb=3.04′ (SDDS)
(d) 24" x 3.83′ APC
(e) G1 INLET W/24-12 GRATE, H=3.85′
(f) 50.00′ GLD
(g) 24" x 148.56′ APC
(h) JUNCTION STRUCTURE, Hb=3.04′ (SDDS)
(i) 24" x 8.48′ APC
(j) G1 INLET W/24-12 GRATE, H=3.56′
(k) 50.00′ GLD
(m) REMOVE CULVERT (24" x 7.10′ CMP)
(n) REMOVE INLET

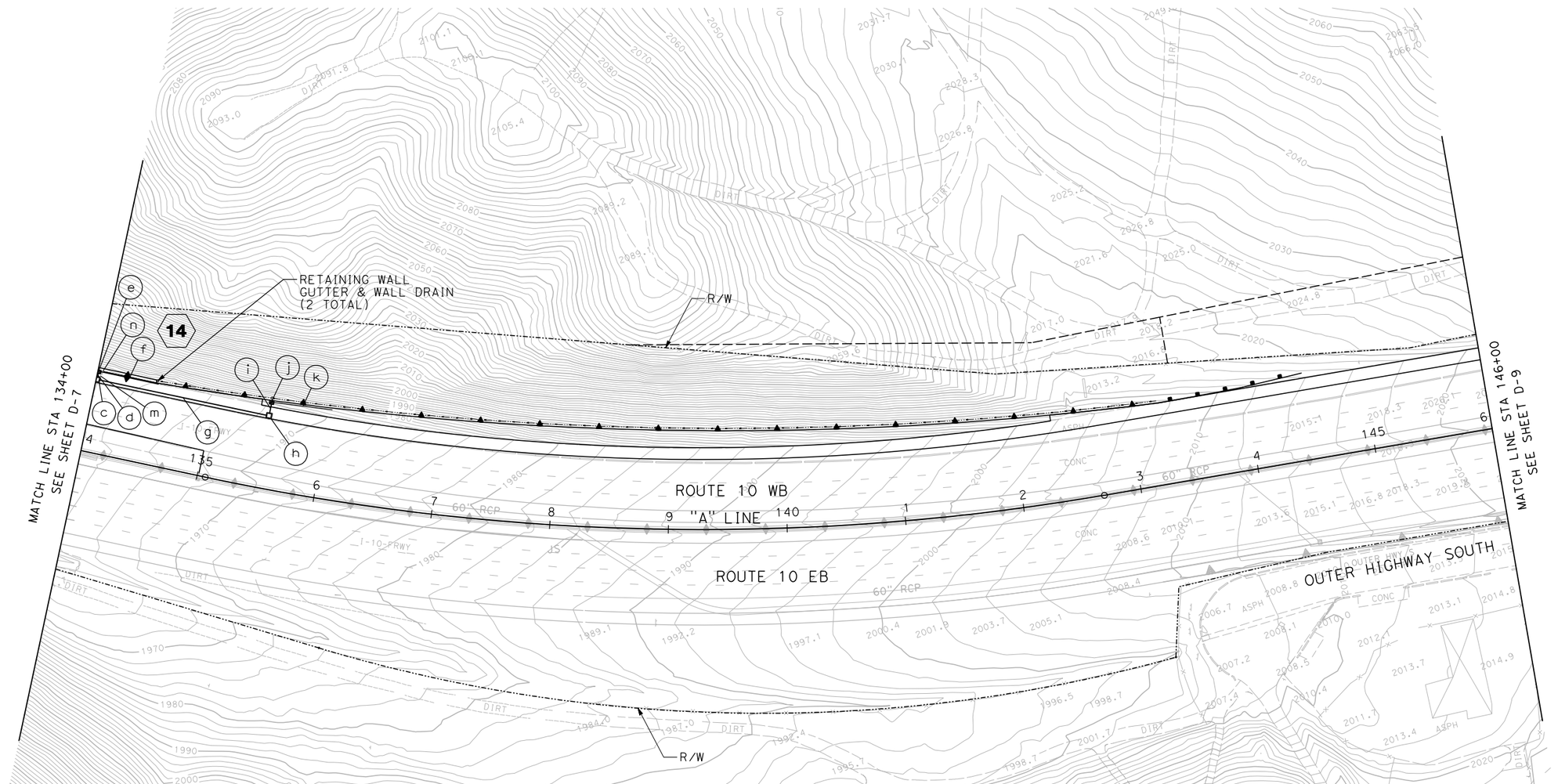

THIS PLAN ACCURATE FOR DRAINAGE WORK ONLY.

DRAINAGE PLAN
SCALE 1"=50′

D-8

STATE OF CALIFORNIA - DEPARTMENT OF TRANSPORTATION
Caltrans

CONSULTANT FUNCTIONAL SUPERVISOR: ED KOUZI

CALCULATED-DESIGNED BY: GREG KEPPLER
CHECKED BY: GLENN YAMANAKA

REVISED BY
DATE REVISED

LAST REVISION 11-25-08
DATE PLOTTED => 7/1/2009
TIME PLOTTED => 9:31:50 AM

RELATIVE BORDER SCALE IS IN INCHES 0 1 2 3

USERNAME => yamanakag
DGN FILE => ...\0f150ia08.dgn

CU 08220

EA 0F1500

Dist	COUNTY	ROUTE	POST MILES TOTAL PROJECT	SHEET No.	TOTAL SHEETS
8	SBd	10	33.3/R36.9	XXX	XXX

REGISTERED CIVIL ENGINEER DATE

PLANS APPROVAL DATE

REGISTERED PROFESSIONAL ENGINEER GERARD F. DALZIEL No. 36333 Exp. 6/30/10 CIVIL STATE OF CALIFORNIA

THE STATE OF CALIFORNIA OR ITS OFFICERS OR AGENTS SHALL NOT BE RESPONSIBLE FOR THE ACCURACY OR COMPLETENESS OF ELECTRONIC COPIES OF THIS PLAN SHEET.

SANBAG
1170 WEST 3RD STREET
2ND FLOOR
SAN BERNARDINO, CA 92410

AECOM
999 W. TOWN & COUNTRY RD
ORANGE, CA 92868

15
- (a) 24" x 2.62' APC W/L-2 COLLAR (SDDS)
- (b) G2 INLET W/24-12 GRATE, H=4.13'
- (c) 24" x 76.35' APC W/CI 4 Conc Bkf (SDDS)
- (d) JUNCTION STRUCTURE, Hb=3.04' (SDDS)
- (e) 24" x 9.72' APC W/CI 4 Conc Bkf (SDDS)
- (f) G1 INLET W/24-12 GRATE, H=3.49'
- (g) 24" x 173.50' APC W/CI 4 Conc Bkf (SDDS)
- (h) JUNCTION STRUCTURE, Hb=3.04' (SDDS)
- (i) 24" x 7.19' APC W/CI 4 Conc Bkf (SDDS)
- (j) G1 INLET W/24-12 GRATE, H=2.94'
- (k) 20.00' GLD
- (l) 24" x 221.39' APC W/CI 4 Conc Bkf (SDDS)
- (m) JUNCTION STRUCTURE, Hb=3.04' (SDDS)
- (n) 24" x 7.19' APC W/CI 4 Conc Bkf (SDDS)
- (o) G1 INLET W/24-12 GRATE, H=2.93'
- (p) 15.00' GLD
- (q) REMOVE INLET

16
- (a) 18" x 11.57' APC W/L-2 COLLAR (SDDS)
- (b) G1 INLET W/24-12 GRATE, H=4.34'
- (c) 7.00' GLD
- (d) REMOVE INLET

17
- (a) 24" x 14.08' APC W/L-2 COLLAR, CI 4 Conc Bkf (SDDS)
- (b) G1 INLET W/24-12 GRATE, H=3.28'
- (c) 15.00' GLD
- (d) 24" x 5.00' APC W/L-2 COLLAR (SDDS)
- (e) 24" x 20.68' APC W/L-2 COLLAR (SDDS)
- (f) REMOVE INLET
- (g) REMOVE CULVERT (24" x 33.30' CMP)

18
- (a) 18" x 14.37' APC W/L-2 COLLAR, CI 4 Conc Bkf (SDDS)
- (b) G1 INLET W/24-12 GRATE, H=2.99'
- (c) REMOVE INLET

19
- (a) CAP INLET (SDDS)
- (b) 24" x 4.15' APC W/L-3 COLLAR (SDDS)
- (c) GT3 INLET W/2x24-12 GRATES, H=3.93'
- (d) 24" x 11.47' APC W/L-2 COLLAR (SDDS)
- (e) 24" x 65.27' APC W/L-3 COLLAR (SDDS)
- (f) CI 4 Conc Bkf (SDDS)
- (i) REMOVE CULVERT (36" x 82.50' CMP)

20
- (a) 18" x 8.28' AP RISER W/J-1 COLLAR, SAFETY CAGE (SDDS)
- (b) G1 INLET W/24-12 GRATE, H=2.47'
- (c) 10.00' GLD
- (d) 18" x 7.48' AP RISER W/J-1 COLLAR, SAFETY CAGE (SDDS)
- (e) G1 INLET W/24-12 GRATE, H=2.46'

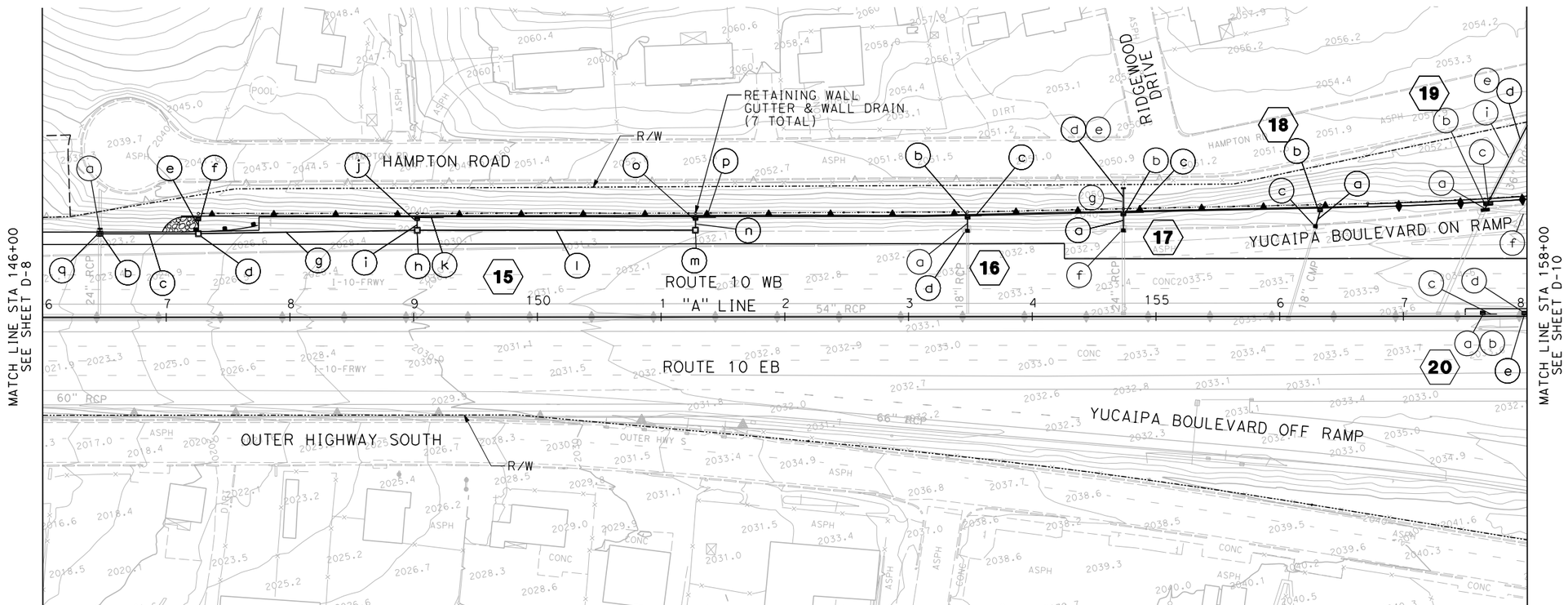

THIS PLAN ACCURATE FOR DRAINAGE WORK ONLY.

DRAINAGE PLAN

SCALE 1"=50'

D-9

STATE OF CALIFORNIA - DEPARTMENT OF TRANSPORTATION

Caltrans

CONSULTANT FUNCTIONAL SUPERVISOR: ED KOUZI

CALCULATED-DESIGNED BY: GREG KEPPLER

CHECKED BY: GLENN YAMANAKA

REVISED BY | DATE REVISED

LAST REVISION 11-25-08

DATE PLOTTED => 7/1/2009
TIME PLOTTED => 9:18:13 AM

RELATIVE BORDER SCALE IS IN INCHES 0 1 2 3

USERNAME => yamanakag
DGN FILE => ...\0f150ia09.dgn

CU 08220

EA 0F1500

Dist	COUNTY	ROUTE	POST MILES TOTAL PROJECT	SHEET No.	TOTAL SHEETS
8	SBd	10	33.3/R36.9	XXX	XXX

REGISTERED CIVIL ENGINEER DATE

PLANS APPROVAL DATE

REGISTERED PROFESSIONAL ENGINEER GERARD F. DALZIEL No. 36333 Exp. 6/30/10 CIVIL STATE OF CALIFORNIA

THE STATE OF CALIFORNIA OR ITS OFFICERS OR AGENTS SHALL NOT BE RESPONSIBLE FOR THE ACCURACY OR COMPLETENESS OF ELECTRONIC COPIES OF THIS PLAN SHEET.

SANBAG
1170 WEST 3RD STREET
2ND FLOOR
SAN BERNARDINO, CA 92410

AECOM
999 W. TOWN & COUNTRY RD
ORANGE, CA 92868

19 (e) 24" x 65.27' APC W/L-3 COLLAR (SDDS)
(f) CI 4 Conc Bkf (SDDS)
(g) 18" x 40.98' APC W/L-2 COLLAR, CI 4 Conc Bkf (SDDS)
(h) GCP INLET W/36R GRATE, H=3.85'
(i) REMOVE CULVERT (36" x 82.50' CMP)

20 (f) 10.00' GLD

21 (a) 24" x 5.63' APC W/L-2 COLLAR (SDDS)
(b) "L" HEADWALL, W=6.33'
(c) 266.11' BIOFILTRATION SWALE (SDDS)
(d) CONCRETE SPILLWAY (SDDS)
(e) REMOVE HEADWALL

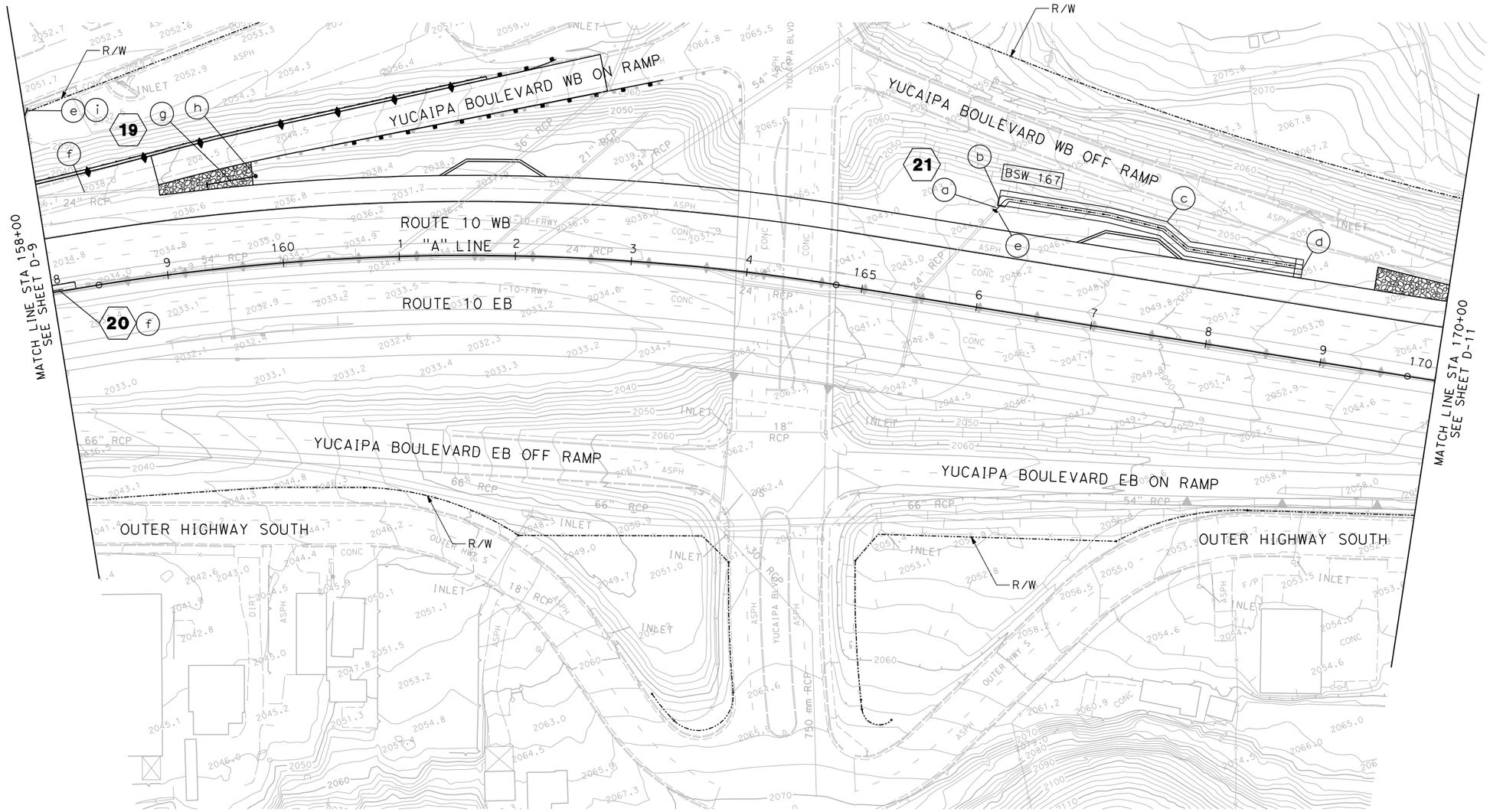

THIS PLAN ACCURATE FOR DRAINAGE WORK ONLY.

DRAINAGE PLAN

SCALE 1"=50'

D-10

REVISED BY	DATE REVISED
GREG KEPPLER	GLENN YAMANAKA

CALCULATED-DESIGNED BY / CHECKED BY

CONSULTANT FUNCTIONAL SUPERVISOR: ED KOUZI

STATE OF CALIFORNIA - DEPARTMENT OF TRANSPORTATION

Caltrans

LAST REVISION 11-25-08 | DATE PLOTTED => 6/30/2009 | TIME PLOTTED => 5:27:47 PM

RELATIVE BORDER SCALE IS IN INCHES 0 1 2 3

USERNAME => YamanakaG
DGN FILE => ...\0f150ia10.dgn

CU 08220 | EA 0F1500

Dist	COUNTY	ROUTE	POST MILES TOTAL PROJECT	SHEET No.	TOTAL SHEETS
8	SBd	10	33.3/R36.9	XXX	XXX

REGISTERED CIVIL ENGINEER DATE

PLANS APPROVAL DATE

REGISTERED PROFESSIONAL ENGINEER GERARD F. DALZIEL No. 36333 Exp. 6/30/10 CIVIL STATE OF CALIFORNIA

THE STATE OF CALIFORNIA OR ITS OFFICERS OR AGENTS SHALL NOT BE RESPONSIBLE FOR THE ACCURACY OR COMPLETENESS OF ELECTRONIC COPIES OF THIS PLAN SHEET.

SANBAG
1170 WEST 3RD STREET
2ND FLOOR
SAN BERNARDINO, CA 92410

AECOM
999 W. TOWN & COUNTRY RD
ORANGE, CA 92868

22 (a) 18" x 27.05' APC W/L-2 COLLAR, Cl 4 Conc Bkf (SDDS)
(b) G1 INLET W/24-12 GRATE, H=2.80'
(c) 25.00' GLD
(d) REMOVE CULVERT (18" x 27.70' RCP)
(e) REMOVE INLET

23 (a) 18" x 12.72' APC W/L-2 COLLAR, Cl 4 Conc Bkf (SDDS)
(b) G1 INLET W/24-12 GRATE, H=2.92'
(c) 30.00' GLD
(d) REMOVE INLET

24 (e) 337.63' CONCRETE CHANNEL (SDDS)

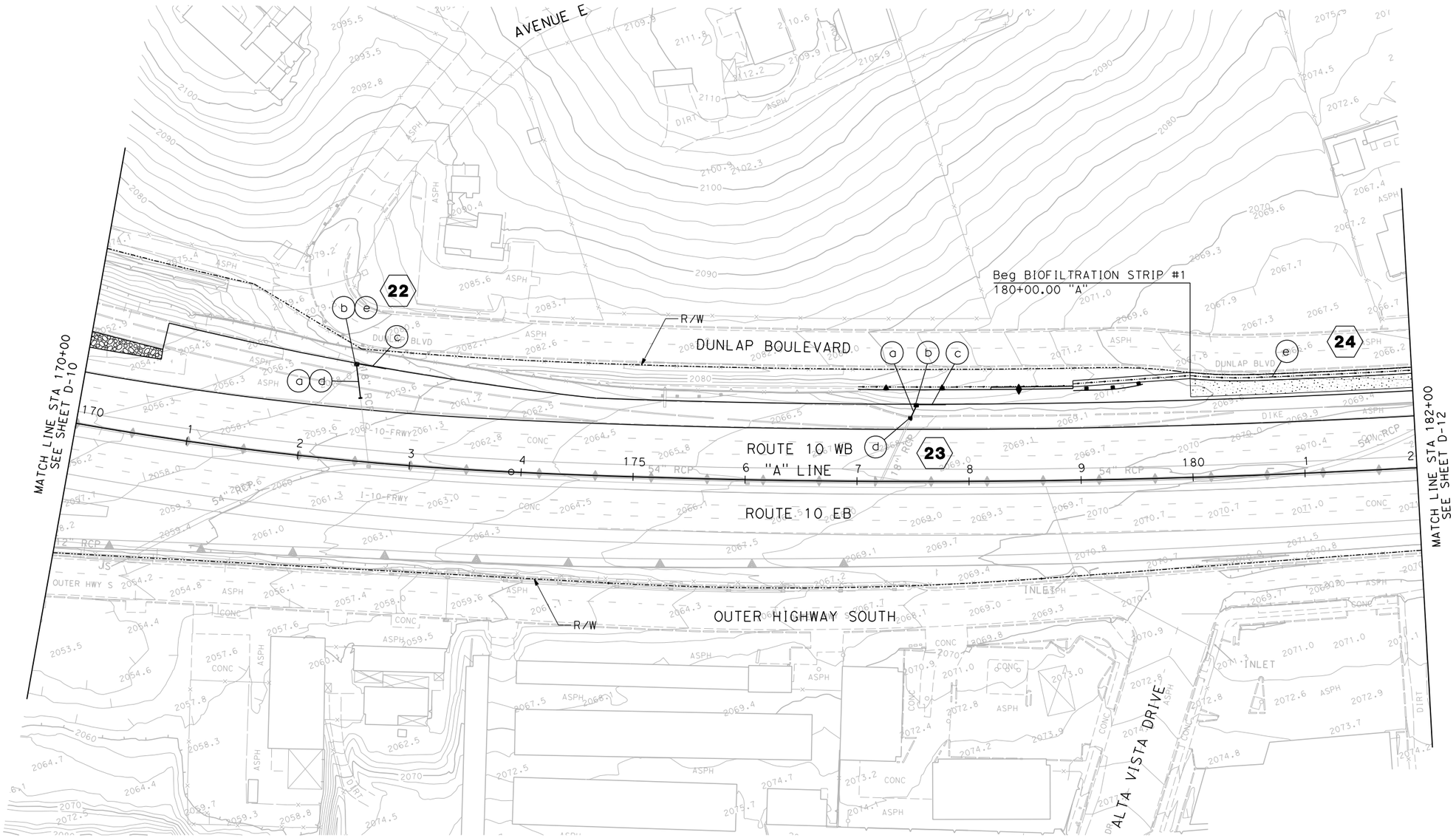

THIS PLAN ACCURATE FOR DRAINAGE WORK ONLY.

DRAINAGE PLAN

SCALE 1"=50'

D-11

STATE OF CALIFORNIA - DEPARTMENT OF TRANSPORTATION
Caltrans

CONSULTANT FUNCTIONAL SUPERVISOR: ED KOUZI
CALCULATED-DESIGNED BY: GREG KEPPLER
CHECKED BY: GLENN YAMANAKA
REVISED BY
DATE REVISED

LAST REVISION 11-25-08
DATE PLOTTED => 6/30/2009
TIME PLOTTED => 5:27:51 PM

RELATIVE BORDER SCALE IS IN INCHES 0 1 2 3

USERNAME => YamanakaG
DGN FILE => ...\0f150ia11.dgn

CU 08220

EA 0F1500

Dist	COUNTY	ROUTE	POST MILES TOTAL PROJECT	SHEET No.	TOTAL SHEETS
8	SBd	10	33.3/R36.9	XXX	XXX

REGISTERED CIVIL ENGINEER DATE

PLANS APPROVAL DATE

REGISTERED PROFESSIONAL ENGINEER GERARD F. DALZIEL No. 36333 Exp. 6/30/10 CIVIL STATE OF CALIFORNIA

THE STATE OF CALIFORNIA OR ITS OFFICERS OR AGENTS SHALL NOT BE RESPONSIBLE FOR THE ACCURACY OR COMPLETENESS OF ELECTRONIC COPIES OF THIS PLAN SHEET.

SANBAG
1170 WEST 3RD STREET
2ND FLOOR
SAN BERNARDINO, CA 92410

AECOM
999 W. TOWN & COUNTRY RD
ORANGE, CA 92868

24

(a) MANHOLE 322, H=6.00′, W/36" x 6.95′ AP RISER, MH F & C (SDDS)
(b) 18" x 46.70′ APC
(c) G1 INLET W/24-12 GRATE, H=3.00′
(d) CONCRETE APRON - TYPE B (SDDS)
(e) 337.63′ CONCRETE CHANNEL (SDDS)
(f) 42" x 50.24′ APC
(g) JUNCTION STRUCTURE, Hb=5.55′, W/MH F & C (SDDS)
(h) 18" x 3.82′ APC
(i) GT3 INLET W/2x24-12 GRATES, H=3.00′
(j) 42" x 248.77′ APC
(k) JUNCTION STRUCTURE, Hb=5.39′, W/MH F & C (SDDS)
(l) 18" x 3.83′ APC
(m) GT3 INLET W/2x24-12 GRATES, H=3.00′
(n) 42" x 215.65′ APC
(o) JUNCTION STRUCTURE, Hb=6.01′, W/MH F & C (SDDS)
(p) 24" x 10.98′ APC W/L-2 COLLAR (SDDS)
(q) 42" x 78.30′ APC
(r) JUNCTION STRUCTURE, Hb=3.68′, W/MH F & C (SDDS)
(s) 18" x 44.90′ APC
(t) GCP INLET W/36R GRATE, H=3.00′
(u) CONCRETE APRON - TYPE A (SDDS)
(v) CURB (TYPE A2-8) (SDDS)
(w) REMOVE CONCRETE CHANNEL

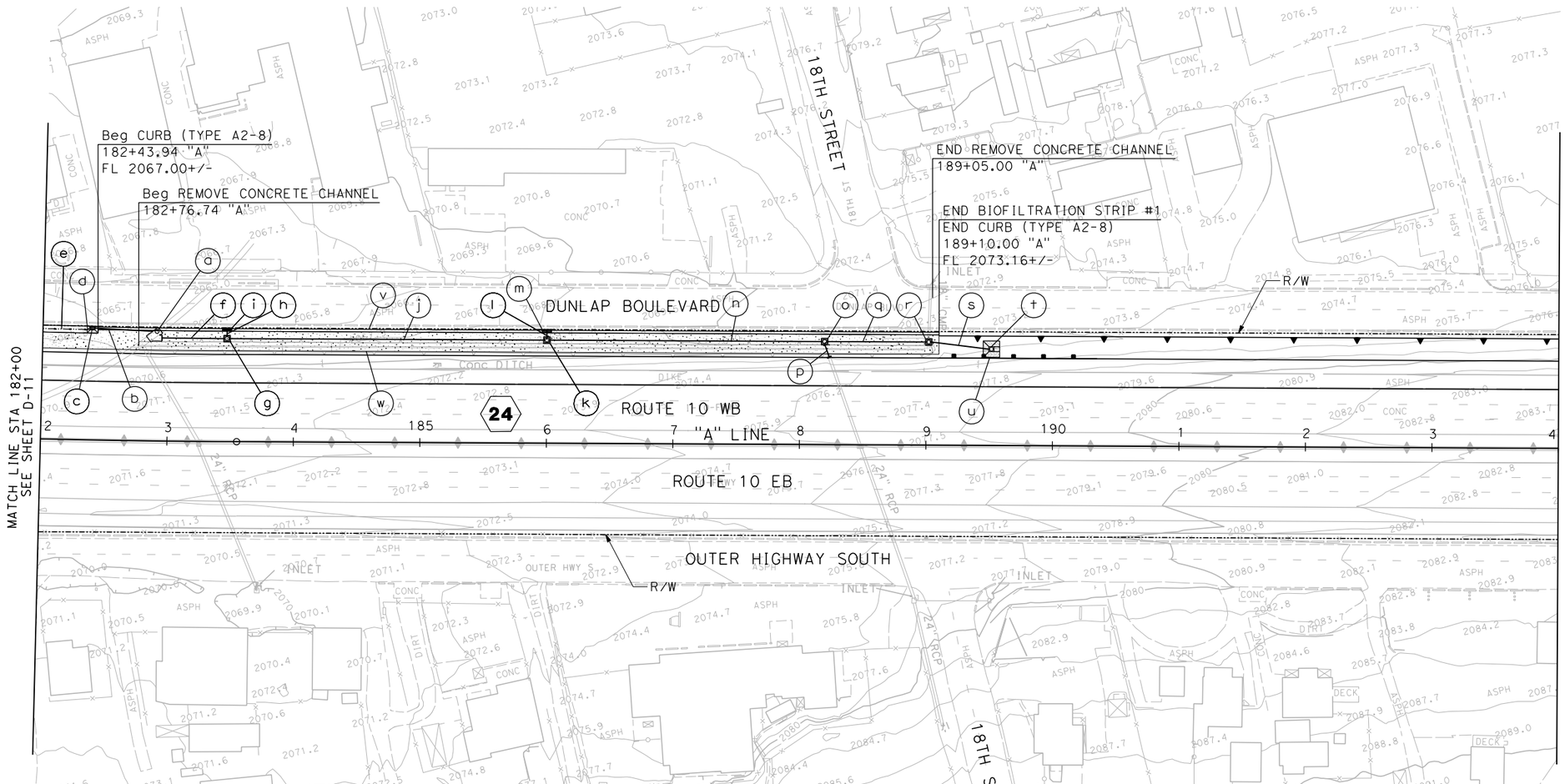

THIS PLAN ACCURATE FOR DRAINAGE WORK ONLY.

DRAINAGE PLAN

SCALE 1"=50′

D-12

REVISED BY	DATE REVISED
GREG KEPPLER	GLENN YAMANAKA

CALCULATED-DESIGNED BY
CHECKED BY

CONSULTANT FUNCTIONAL SUPERVISOR
ED KOUZI

STATE OF CALIFORNIA - DEPARTMENT OF TRANSPORTATION
Caltrans

LAST REVISION 11-25-08
DATE PLOTTED => 6/30/2009
TIME PLOTTED => 5:27:54 PM

RELATIVE BORDER SCALE IS IN INCHES 0 1 2 3

USERNAME => YamanakaG
DGN FILE => ...\0f150ia12.dgn

CU 08220

EA 0F1500

Dist	COUNTY	ROUTE	POST MILES TOTAL PROJECT	SHEET No.	TOTAL SHEETS
8	SBd	10	33.3/R36.9	XXX	XXX

REGISTERED CIVIL ENGINEER DATE

PLANS APPROVAL DATE

REGISTERED PROFESSIONAL ENGINEER GERARD F. DALZIEL No. 36333 Exp. 6/30/10 CIVIL STATE OF CALIFORNIA

THE STATE OF CALIFORNIA OR ITS OFFICERS OR AGENTS SHALL NOT BE RESPONSIBLE FOR THE ACCURACY OR COMPLETENESS OF ELECTRONIC COPIES OF THIS PLAN SHEET.

SANBAG
1170 WEST 3RD STREET
2ND FLOOR
SAN BERNARDINO, CA 92410

AECOM
999 W. TOWN & COUNTRY RD
ORANGE, CA 92868

25
- (a) G2 INLET W/24-12 GRATE, H=9.78′
- (b) 18" x 120.23′ APC
- (c) G1 INLET W/24-12 GRATE, H=3.50′
- (d) JUNCTION STRUCTURE, Hb=3.00′, W/36" x 9.40′ AP RISER, 36R GRATE (SDDS)
- (e) CONCRETE APRON - TYPE C (SDDS)
- (f) CAP INLET (SDDS)
- (g) 18" x 187.60′ APC
- (h) GCP INLET W/36R GRATE, H=3.50′
- (i) CONCRETE APRON - TYPE C (SDDS)
- (j) REMOVE CULVERT (12" x 6.30′ CSP RISER)
- (k) REMOVE INLET

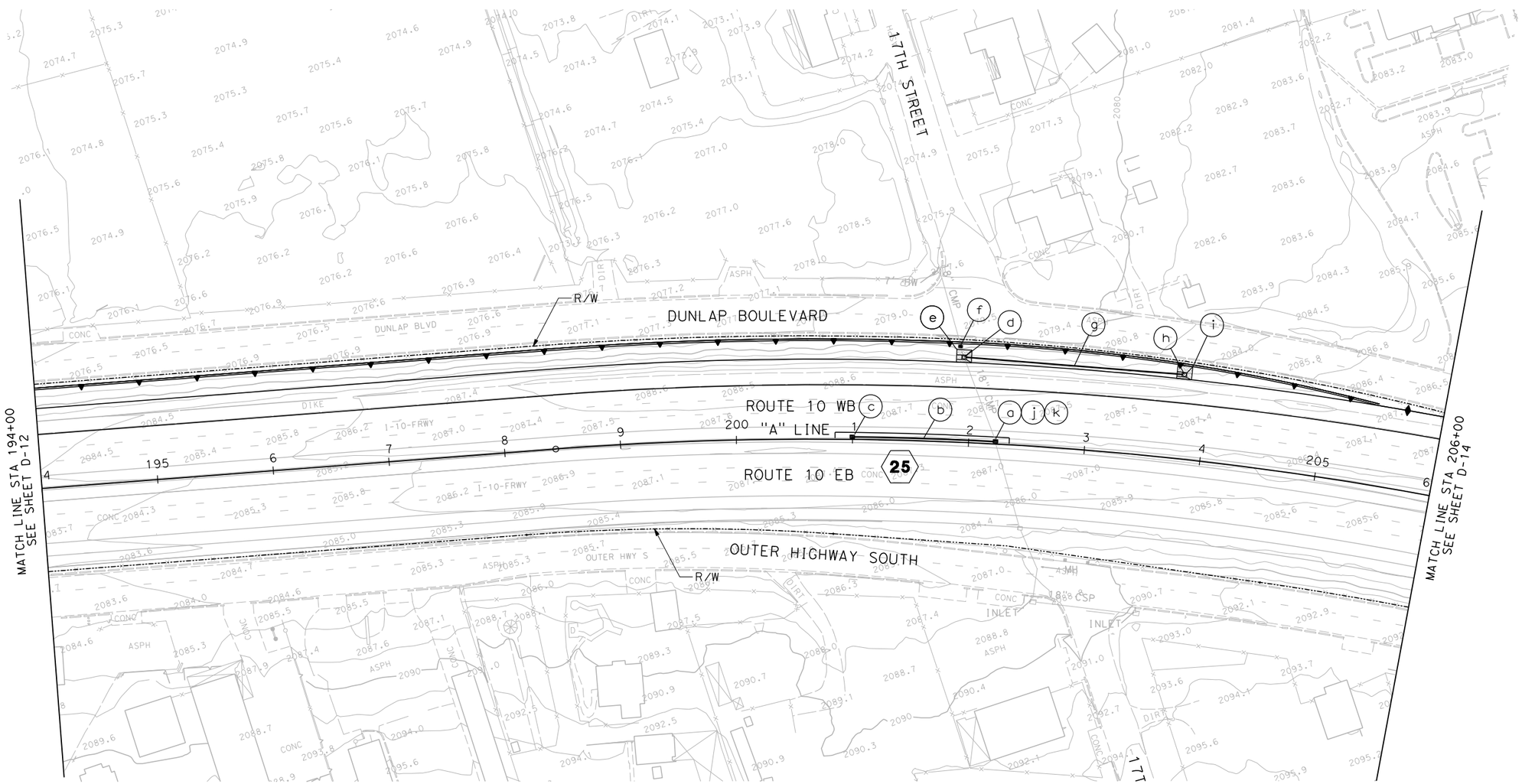

THIS PLAN ACCURATE FOR DRAINAGE WORK ONLY.

DRAINAGE PLAN

SCALE 1"=50′

D-13

REVISED BY	DATE REVISED
GREG KEPPLER	GLENN YAMANAKA

CALCULATED-DESIGNED BY
CHECKED BY

CONSULTANT FUNCTIONAL SUPERVISOR
ED KOUZI

STATE OF CALIFORNIA - DEPARTMENT OF TRANSPORTATION
Caltrans

LAST REVISION 11-25-08
DATE PLOTTED => 6/30/2009
TIME PLOTTED => 5:27:56 PM

RELATIVE BORDER SCALE IS IN INCHES 0 1 2 3

USERNAME => YamanakaG
DGN FILE => ...\0f150ia13.dgn

CU 08220

EA 0F1500

Dist	COUNTY	ROUTE	POST MILES TOTAL PROJECT	SHEET No.	TOTAL SHEETS
8	SBd	10	33.3/R36.9	XXX	XXX

REGISTERED CIVIL ENGINEER DATE

PLANS APPROVAL DATE

REGISTERED PROFESSIONAL ENGINEER GERARD F. DALZIEL No. 36333 Exp 6/30/10 CIVIL STATE OF CALIFORNIA

THE STATE OF CALIFORNIA OR ITS OFFICERS OR AGENTS SHALL NOT BE RESPONSIBLE FOR THE ACCURACY OR COMPLETENESS OF ELECTRONIC COPIES OF THIS PLAN SHEET.

SANBAG
1170 WEST 3RD STREET
2ND FLOOR
SAN BERNARDINO, CA 92410

AECOM
999 W. TOWN & COUNTRY RD
ORANGE, CA 92868

26
- (a) G1 INLET W/24-12 GRATE, H=3.47′
- (b) 18" x 88.41′ APC
- (c) G1 INLET W/24-12 GRATE, H=3.56′
- (d) REMOVE CULVERT (18" x 13.70′ RCP)
- (e) REMOVE INLET
- (f) REMOVE CULVERT (18" x 97.50′ RCP)
- (g) 18" x 15.43′ APC W/L-2 COLLAR (SDDS)

27
- (a) 24" x 14.84′ APC W/L-2 COLLAR (SDDS)
- (b) JUNCTION STRUCTURE, Hb=3.66′, W/36R GRATE (SDDS)
- (c) 18" x 232.94′ APC
- (d) JUNCTION STRUCTURE, Hb=3.00′, W/36R GRATE (SDDS)
- (e) REMOVE HEADWALL
- (f) REMOVE CONCRETE CHANNEL

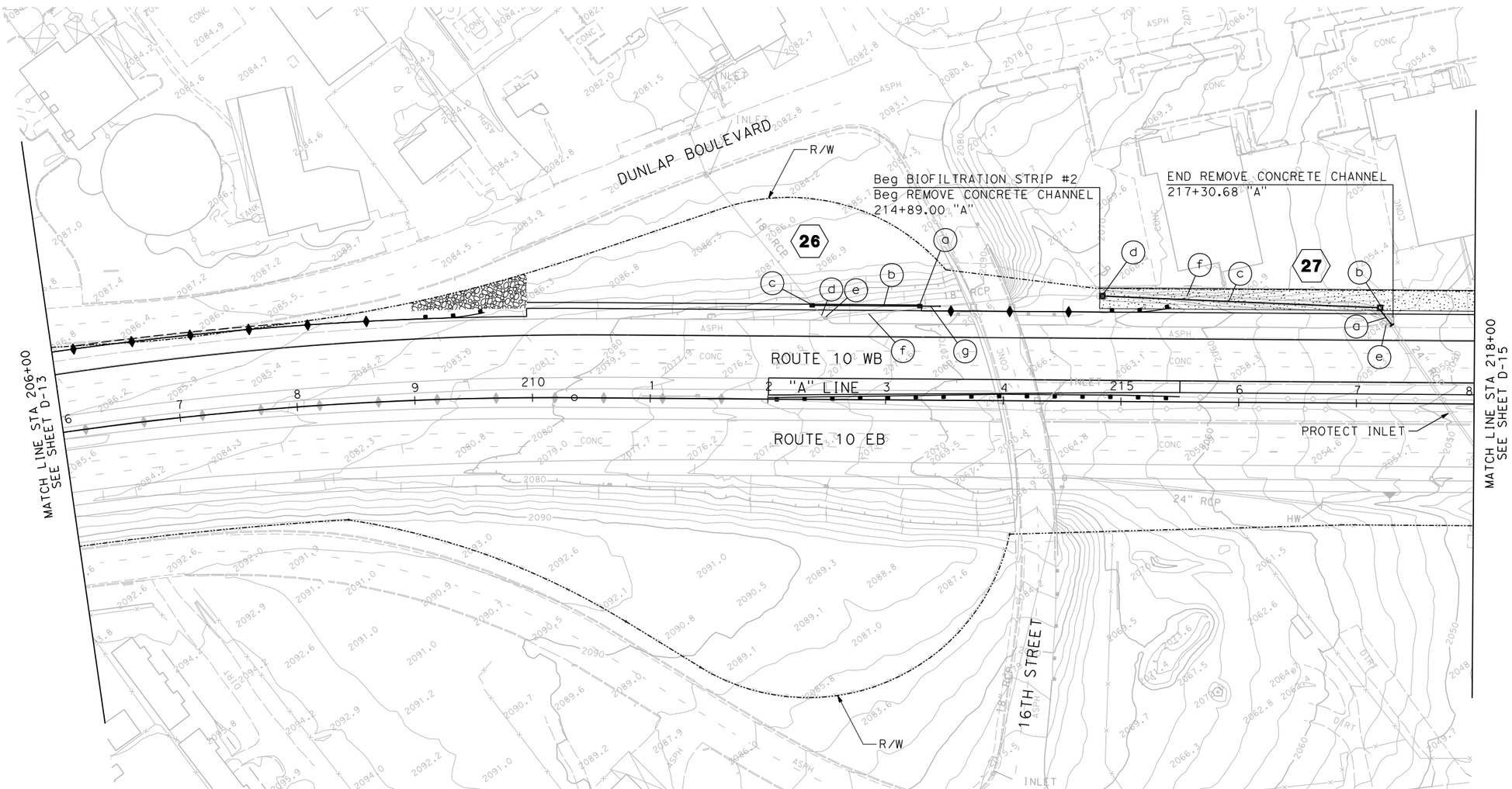

THIS PLAN ACCURATE FOR DRAINAGE WORK ONLY.

DRAINAGE PLAN

SCALE 1"=50′

D-14

REVISED BY	DATE REVISED
GREG KEPPLER	GLENN YAMANAKA
CALCULATED-DESIGNED BY	CHECKED BY
CONSULTANT FUNCTIONAL SUPERVISOR	ED KOUZI

STATE OF CALIFORNIA - DEPARTMENT OF TRANSPORTATION

Caltrans

LAST REVISION 11-25-08 | DATE PLOTTED => 6/30/2009 TIME PLOTTED => 5:27:58 PM

RELATIVE BORDER SCALE IS IN INCHES 0 1 2 3

USERNAME => YamanakaG
DGN FILE => ...\0f150ia14.dgn

CU 08220 | EA 0F1500

Dist	COUNTY	ROUTE	POST MILES TOTAL PROJECT	SHEET No.	TOTAL SHEETS
8	SBd	10	33.3/R36.9	XXX	XXX

REGISTERED CIVIL ENGINEER DATE

PLANS APPROVAL DATE

REGISTERED PROFESSIONAL ENGINEER GERARD F. DALZIEL No. 36333 Exp 6/30/10 CIVIL STATE OF CALIFORNIA

THE STATE OF CALIFORNIA OR ITS OFFICERS OR AGENTS SHALL NOT BE RESPONSIBLE FOR THE ACCURACY OR COMPLETENESS OF ELECTRONIC COPIES OF THIS PLAN SHEET.

SANBAG
1170 WEST 3RD STREET
2ND FLOOR
SAN BERNARDINO, CA 92410

AECOM
999 W. TOWN & COUNTRY RD
ORANGE, CA 92868

28 (a) JUNCTION STRUCTURE, Hb=2.52′ (SDDS)
(b) 24" x 195.22′ APC W/CI 4 Conc Bkf (SDDS)
(c) 24" x 147.58′ APC
(d) JUNCTION STRUCTURE, Hb=3.04′ (SDDS)
(e) 24" x 17.96′ APC
(f) GT3 INLET W/2x24-12 GRATES, H=3.00′

28 (g) 18" x 233.69′ APC
(h) GT3 INLET W/2x24-12 GRATES, H=2.89′

29 (a) 242.21′ BIOFILTRATION SWALE (SDDS)

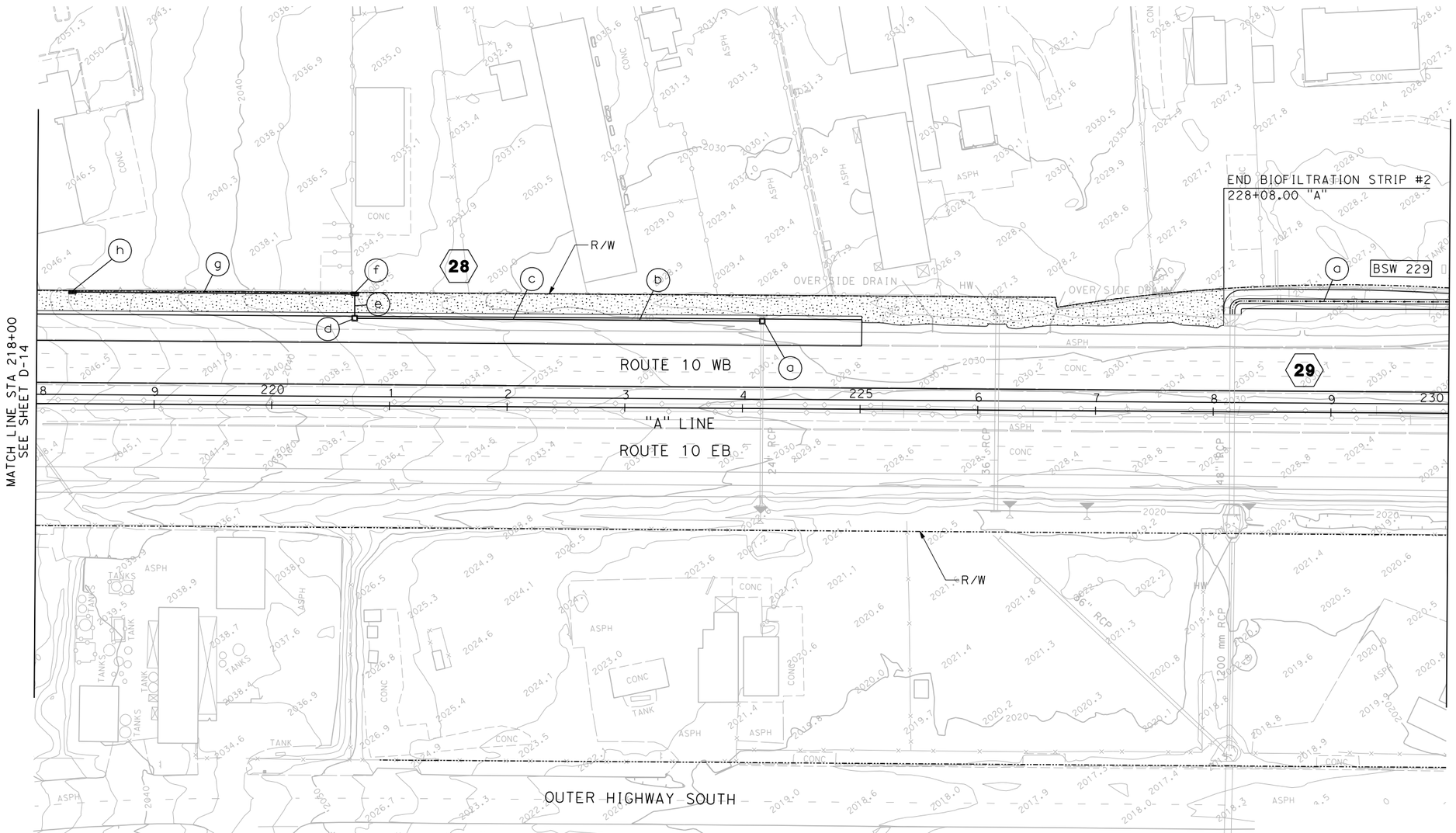

THIS PLAN ACCURATE FOR DRAINAGE WORK ONLY.

DRAINAGE PLAN

SCALE 1"=50′

D-15

STATE OF CALIFORNIA - DEPARTMENT OF TRANSPORTATION	CONSULTANT FUNCTIONAL SUPERVISOR	CALCULATED-DESIGNED BY	CHECKED BY	REVISED BY	DATE REVISED
Caltrans	ED KOUZI	GREG KEPPLER	GLENN YAMANAKA		

LAST REVISION 11-25-08 | DATE PLOTTED => 6/30/2009 TIME PLOTTED => 5:28:04 PM

RELATIVE BORDER SCALE IS IN INCHES 0 1 2 3

USERNAME => YamanakaG
DGN FILE => ...\0f150ia15.dgn

CU 08220 | EA 0F1500

Dist	COUNTY	ROUTE	POST MILES TOTAL PROJECT	SHEET No.	TOTAL SHEETS
8	SBd	10	33.3/R36.9	XXX	XXX

REGISTERED CIVIL ENGINEER DATE

PLANS APPROVAL DATE

REGISTERED PROFESSIONAL ENGINEER GERARD F. DALZIEL No. 36333 Exp 6/30/10 CIVIL STATE OF CALIFORNIA

THE STATE OF CALIFORNIA OR ITS OFFICERS OR AGENTS SHALL NOT BE RESPONSIBLE FOR THE ACCURACY OR COMPLETENESS OF ELECTRONIC COPIES OF THIS PLAN SHEET.

SANBAG
1170 WEST 3RD STREET
2ND FLOOR
SAN BERNARDINO, CA 92410

AECOM
999 W. TOWN & COUNTRY RD
ORANGE, CA 92868

29 a 242.21' BIOFILTRATION SWALE (SDDS)

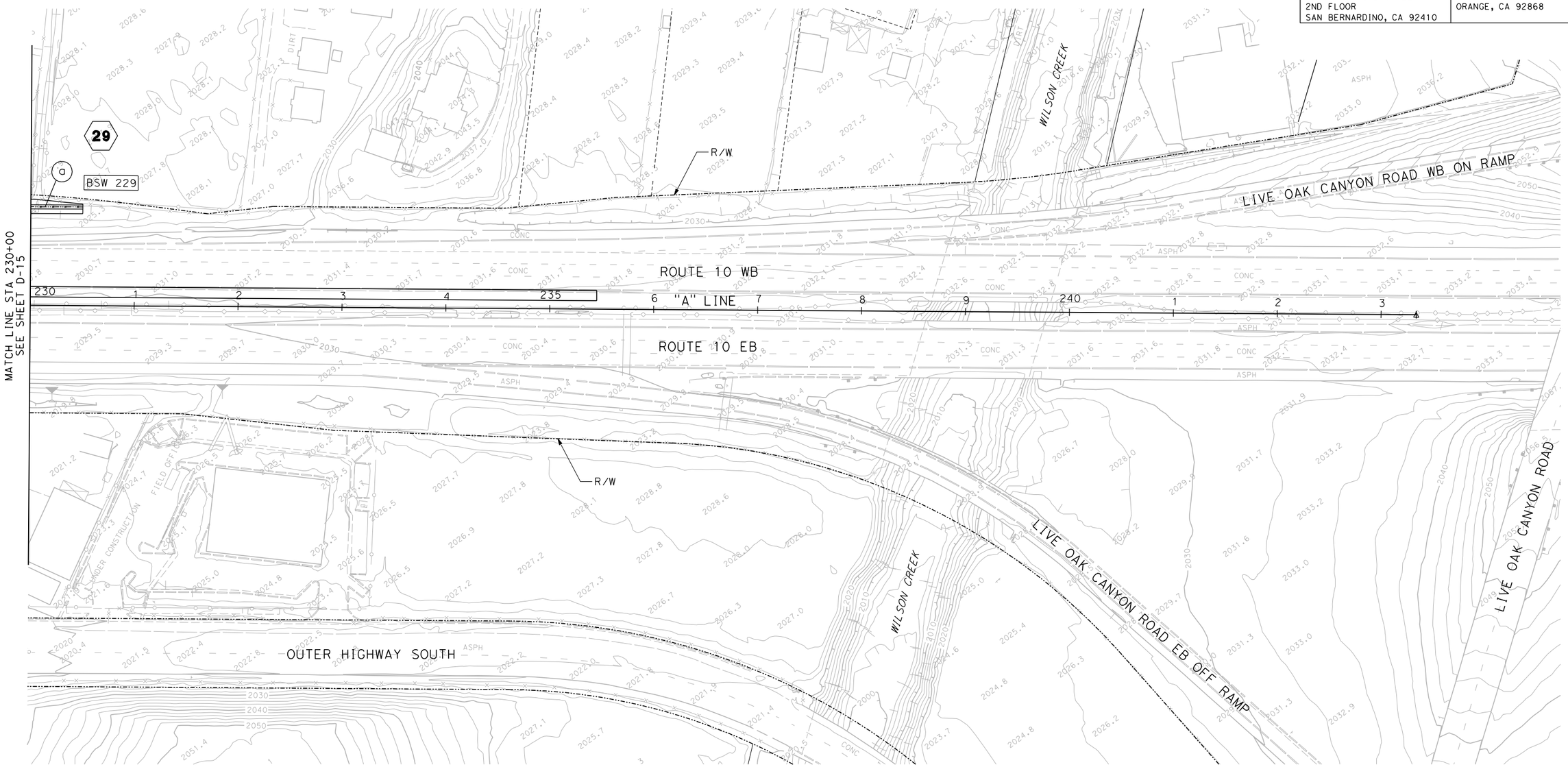

THIS PLAN ACCURATE FOR DRAINAGE WORK ONLY.

DRAINAGE PLAN

SCALE 1"=50'

D-16

STATE OF CALIFORNIA - DEPARTMENT OF TRANSPORTATION

Caltrans

CONSULTANT FUNCTIONAL SUPERVISOR: ED KOUZI

CALCULATED-DESIGNED BY: GREG KEPPLER

CHECKED BY: GLENN YAMANAKA

REVISED BY

DATE REVISED

LAST REVISION 11-25-08

DATE PLOTTED => 6/30/2009
TIME PLOTTED => 5:28:07 PM

RELATIVE BORDER SCALE IS IN INCHES 0 1 2 3

USERNAME => YamanakaG
DGN FILE => ...\0f150ia16.dgn

CU 08220

EA 0F1500

Dist	COUNTY	ROUTE	POST MILES TOTAL PROJECT	SHEET No.	TOTAL SHEETS
8	SBd	10	33.3/R36.9	XXX	XXX

REGISTERED CIVIL ENGINEER DATE

PLANS APPROVAL DATE

REGISTERED PROFESSIONAL ENGINEER GERARD F. DALZIEL No. 36333 Exp 6/30/10 CIVIL STATE OF CALIFORNIA

THE STATE OF CALIFORNIA OR ITS OFFICERS OR AGENTS SHALL NOT BE RESPONSIBLE FOR THE ACCURACY OR COMPLETENESS OF ELECTRONIC COPIES OF THIS PLAN SHEET.

SANBAG
1170 WEST 3RD STREET
2ND FLOOR
SAN BERNARDINO, CA 92410

BOYLE ENGINEERING CORPORATION
1501 QUAIL ST
NEWPORT BEACH, CA 92660

(a) 18" x 5.00' AP RISER W/J-1 COLLAR, SAFETY CAGE (SDDS)
(b) GT3 INLET W/2x24-12 GRATES, H=2.64', SIDE OPENING (SDDS)
(c) REMOVE CULVERT (12" x 3.00' CSP RISER)
(d) REMOVE INLET
(e) REMOVE INLET

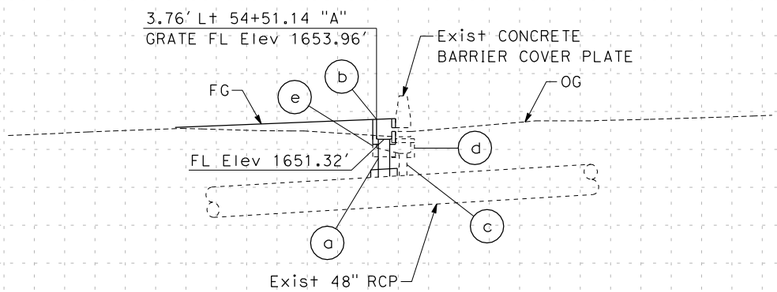

DRAINAGE SYSTEM No. 2

(a) ABANDON INLET

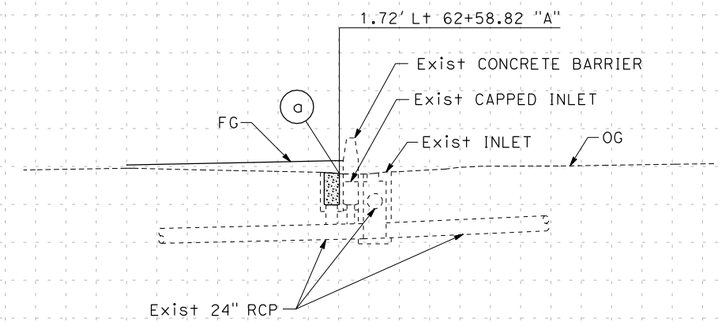

DRAINAGE SYSTEM No. 3

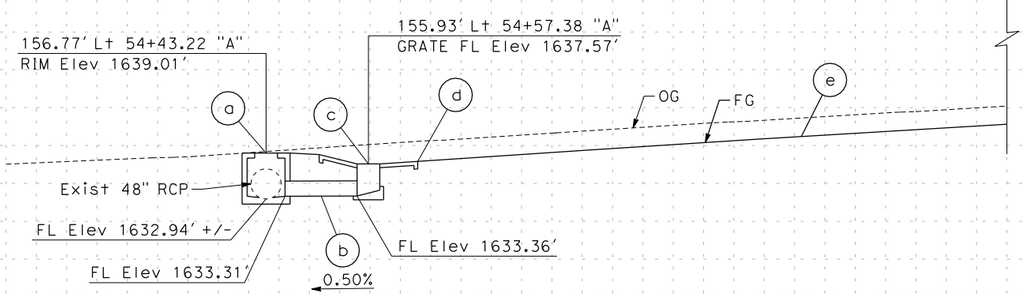

DRAINAGE SYSTEM No. 1

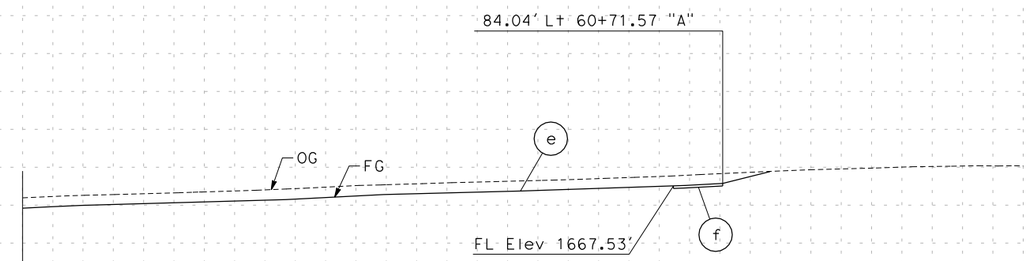

(a) JUNCTION STRUCTURE, Hb=5.40', W/MH F & C (SDDS)
(b) 24" x 9.50' APC
(c) GCP INLET W/36R GRATE, H=4.21'
(d) CONCRETE APRON - TYPE A (SDDS)
(e) 592.09' BIOFILTRATION SWALE (SDDS)
(f) CONCRETE SPILLWAY (SDDS)

DRAINAGE PROFILE

SCALE Horiz 1"=10'
Vert 1"=10'

DP-1

REVISED BY	DATE REVISED
GREG KEPPLER	GLENN YAMANAKA
CALCULATED-DESIGNED BY	CHECKED BY
CONSULTANT FUNCTIONAL SUPERVISOR	ED KOUZI

STATE OF CALIFORNIA - DEPARTMENT OF TRANSPORTATION

Caltrans

Station
m^3 Exc
Emb

LAST REVISION 11-25-08 DATE PLOTTED => 6/30/2009 TIME PLOTTED => 5:34:28 PM

6/30/2009 5:34:28 PM YamanakaG H:\CH2MHill\17044.00\CAD\planset\0f150ib01.dgn

BORDER LAST REVISED 05/28/2008

RELATIVE BORDER SCALE IS IN INCHES 0 1 2 3

USERNAME => YamanakaG
DGN FILE => ...\0f150ib01.dgn

CU 08220

EA 0F1500

Dist	COUNTY	ROUTE	POST MILES TOTAL PROJECT	SHEET No.	TOTAL SHEETS
8	SBd	10	33.3/R36.9	XXX	XXX

REGISTERED CIVIL ENGINEER DATE

PLANS APPROVAL DATE

REGISTERED PROFESSIONAL ENGINEER GERARD F. DALZIEL No. 36333 Exp 6/30/10 CIVIL STATE OF CALIFORNIA

THE STATE OF CALIFORNIA OR ITS OFFICERS OR AGENTS SHALL NOT BE RESPONSIBLE FOR THE ACCURACY OR COMPLETENESS OF ELECTRONIC COPIES OF THIS PLAN SHEET.

SANBAG
1170 WEST 3RD STREET
2ND FLOOR
SAN BERNARDINO, CA 92410

BOYLE ENGINEERING CORPORATION
1501 QUAIL ST
NEWPORT BEACH, CA 92660

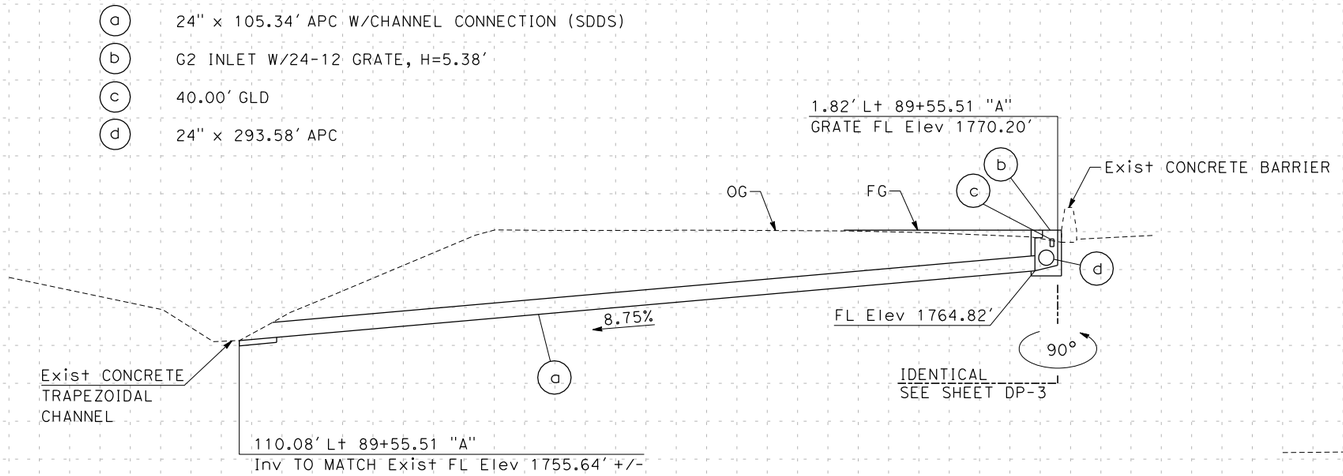

DRAINAGE SYSTEM No. 6

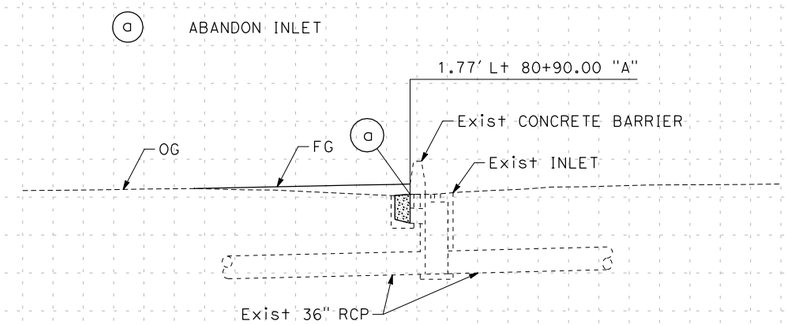

DRAINAGE SYSTEM No. 5

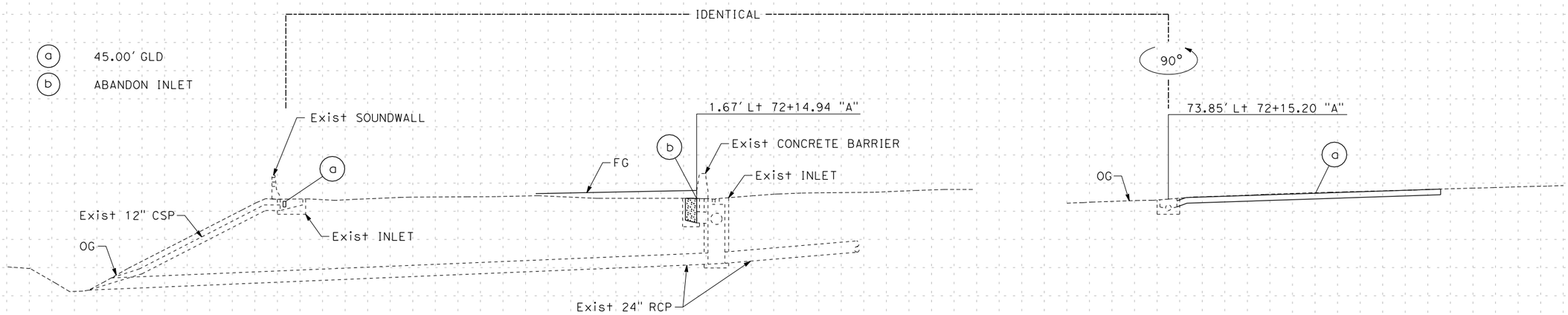

DRAINAGE SYSTEM No. 4

DRAINAGE PROFILE

SCALE Horiz 1"=10'
Vert 1"=10'

DP-2

STATE OF CALIFORNIA - DEPARTMENT OF TRANSPORTATION

Caltrans

CONSULTANT FUNCTIONAL SUPERVISOR: ED KOUZI

CALCULATED-DESIGNED BY: GREG KEPPLER

CHECKED BY: GLENN YAMANAKA

REVISED BY / DATE REVISED

Station

m^3 Exc / Emb

LAST REVISION 11-25-08

DATE PLOTTED => 6/30/2009
TIME PLOTTED => 5:34:28 PM

6/30/2009 5:34:28 PM YamanakaG h:\ch2mhill\17044.00\cad\planset\0f150ib02.dgn

BORDER LAST REVISED 05/28/2008

RELATIVE BORDER SCALE IS IN INCHES 0 1 2 3

USERNAME => YamanakaG
DGN FILE => ...\0f150ib02.dgn

CU 08220

EA 0F1500

Dist	COUNTY	ROUTE	POST MILES TOTAL PROJECT	SHEET No.	TOTAL SHEETS
8	SBd	10	33.3/R36.9	XXX	XXX

REGISTERED CIVIL ENGINEER DATE

PLANS APPROVAL DATE

REGISTERED PROFESSIONAL ENGINEER GERARD F. DALZIEL No. 36333 Exp. 6/30/10 CIVIL STATE OF CALIFORNIA

THE STATE OF CALIFORNIA OR ITS OFFICERS OR AGENTS SHALL NOT BE RESPONSIBLE FOR THE ACCURACY OR COMPLETENESS OF ELECTRONIC COPIES OF THIS PLAN SHEET.

SANBAG
1170 WEST 3RD STREET
2ND FLOOR
SAN BERNARDINO, CA 92410

BOYLE ENGINEERING CORPORATION
1501 QUAIL ST
NEWPORT BEACH, CA 92660

(a) 24" x 105.34' APC W/CHANNEL CONNECTION (SDDS)
(b) G2 INLET W/24-12 GRATE, H=5.38'
(c) 40.00' GLD
(d) 24" x 293.58' APC
(e) G2 INLET W/24-12 GRATE, H=5.30'
(f) 40.00' GLD
(g) 24" x 245.36' APC
(h) G2 INLET W/24-12 GRATE, H=5.29'
(i) 40.00' GLD
(j) 24" x 285.56' APC
(k) G2 INLET W/24-12 GRATE, H=5.28'
(l) 40.00' GLD

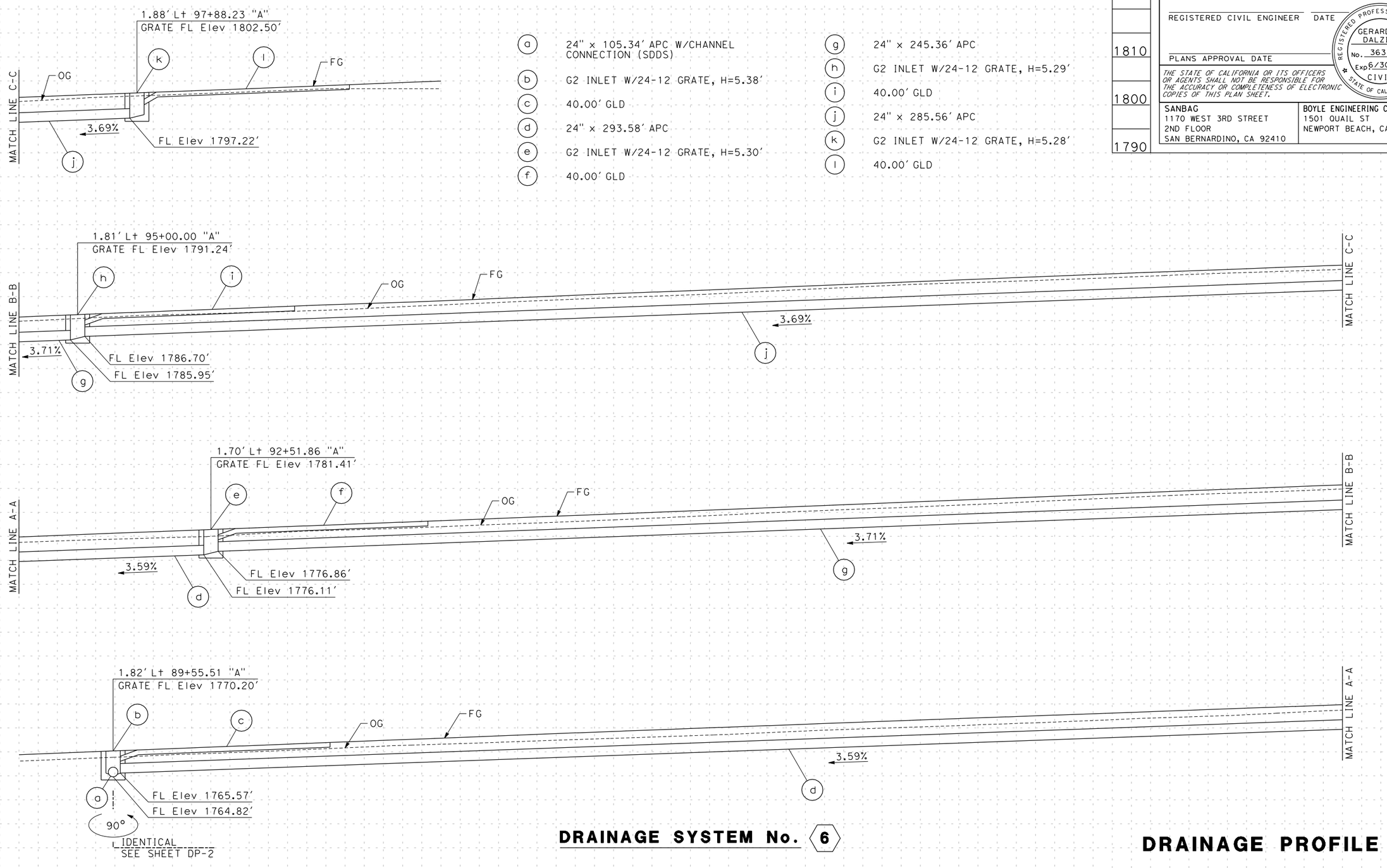

DRAINAGE SYSTEM No. 6

DRAINAGE PROFILE

SCALE Horiz 1"=10'
Vert 1"=10'

DP-3

Station	
m^3	Exc
	Emb

STATE OF CALIFORNIA - DEPARTMENT OF TRANSPORTATION
Caltrans

CONSULTANT FUNCTIONAL SUPERVISOR: ED KOUZI
CALCULATED-DESIGNED BY: GREG KEPPLER
CHECKED BY: GLENN YAMANAKA
REVISED BY / DATE REVISED

LAST REVISION 11-25-08
DATE PLOTTED => 6/30/2009
TIME PLOTTED => 5:34:29 PM

6/30/2009 5:34:29 PM YamanakaG hs\ch2mhill\7044.00\cad\planset\0f150ib03.dgn
BORDER LAST REVISED 05/28/2008

RELATIVE BORDER SCALE IS IN INCHES 0 1 2 3

USERNAME => YamanakaG
DGN FILE => ...\0f150ib03.dgn

CU 08220

EA 0F1500

Dist	COUNTY	ROUTE	POST MILES TOTAL PROJECT	SHEET No.	TOTAL SHEETS
8	SBd	10	33.3/R36.9	XXX	XXX

REGISTERED CIVIL ENGINEER DATE

PLANS APPROVAL DATE

REGISTERED PROFESSIONAL ENGINEER GERARD F. DALZIEL No. 36333 Exp 6/30/10 CIVIL STATE OF CALIFORNIA

THE STATE OF CALIFORNIA OR ITS OFFICERS OR AGENTS SHALL NOT BE RESPONSIBLE FOR THE ACCURACY OR COMPLETENESS OF ELECTRONIC COPIES OF THIS PLAN SHEET.

SANBAG
1170 WEST 3RD STREET
2ND FLOOR
SAN BERNARDINO, CA 92410

BOYLE ENGINEERING CORPORATION
1501 QUAIL ST
NEWPORT BEACH, CA 92660

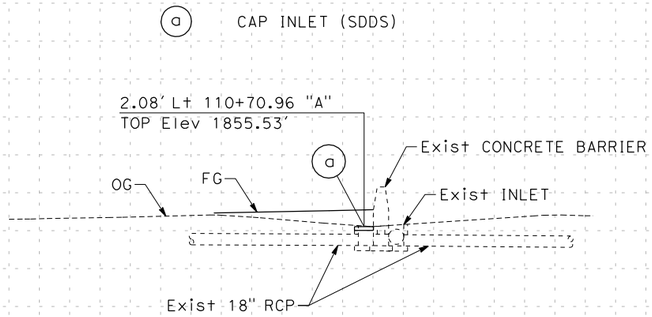

DRAINAGE SYSTEM No. 8

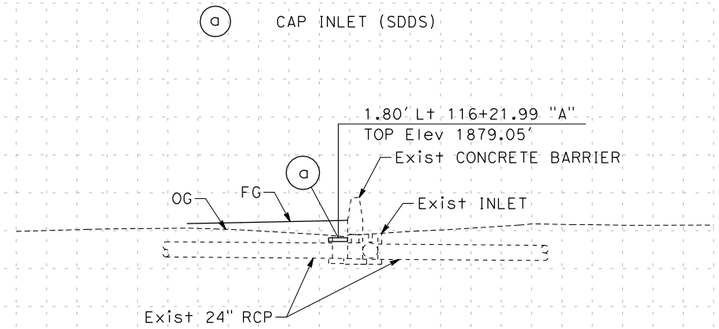

DRAINAGE SYSTEM No. 9

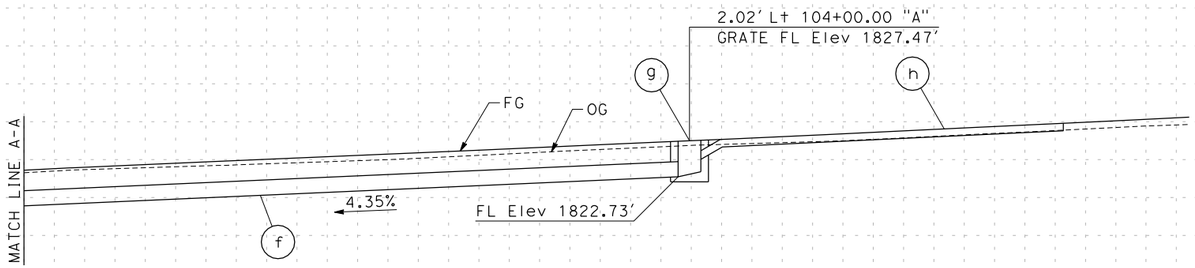

- (a) G2 INLET W/24-12 GRATE, H=4.91'
- (b) 25.00' GLD
- (c) 24" x 82.98' APC
- (d) G2 INLET W/24-12 GRATE, H=5.74'
- (e) 45.00' GLD
- (f) 24" x 248.67' APC
- (g) G2 INLET W/24-12 GRATE, H=4.74'
- (h) 45.00' GLD
- (i) REMOVE INLET

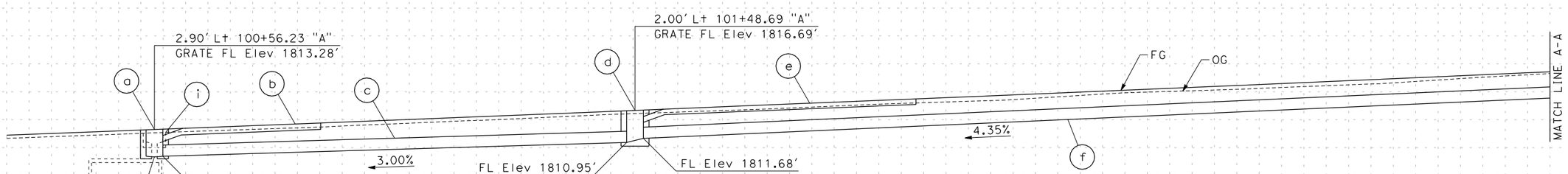

DRAINAGE SYSTEM No. 7

DRAINAGE PROFILE

SCALE Horiz 1"=10'
Vert 1"=10'

DP-4

Station	
m^3 Exc	
m^3 Emb	

STATE OF CALIFORNIA - DEPARTMENT OF TRANSPORTATION

Caltrans

CONSULTANT FUNCTIONAL SUPERVISOR: ED KOUZI

CALCULATED-DESIGNED BY: GREG KEPPLER

CHECKED BY: GLENN YAMANAKA

REVISED BY / DATE REVISED

LAST REVISION 11-25-08

DATE PLOTTED => 6/30/2009
TIME PLOTTED => 5:34:29 PM

6/30/2009 5:34:29 PM YamanakaG h:\ch2mhill\17044.00\cad\planset\0f150ib04.dgn

BORDER LAST REVISED 05/28/2008

RELATIVE BORDER SCALE IS IN INCHES 0 1 2 3

USERNAME => YamanakaG
DGN FILE => ...\0f150ib04.dgn

CU 08220

EA 0F1500

Dist	COUNTY	ROUTE	POST MILES TOTAL PROJECT	SHEET No.	TOTAL SHEETS
8	SBd	10	33.3/R36.9	XXX	XXX

REGISTERED CIVIL ENGINEER DATE

PLANS APPROVAL DATE

REGISTERED PROFESSIONAL ENGINEER GERARD F. DALZIEL No. 36333 Exp 6/30/10 CIVIL STATE OF CALIFORNIA

THE STATE OF CALIFORNIA OR ITS OFFICERS OR AGENTS SHALL NOT BE RESPONSIBLE FOR THE ACCURACY OR COMPLETENESS OF ELECTRONIC COPIES OF THIS PLAN SHEET.

SANBAG
1170 WEST 3RD STREET
2ND FLOOR
SAN BERNARDINO, CA 92410

BOYLE ENGINEERING CORPORATION
1501 QUAIL ST
NEWPORT BEACH, CA 92660

(a) 18" x 5.82' AP RISER W/J-1 COLLAR, SAFETY CAGE (SDDS)
(b) G1 INLET W/24-12 GRATE, H=2.37'
(c) 45.00' GLD

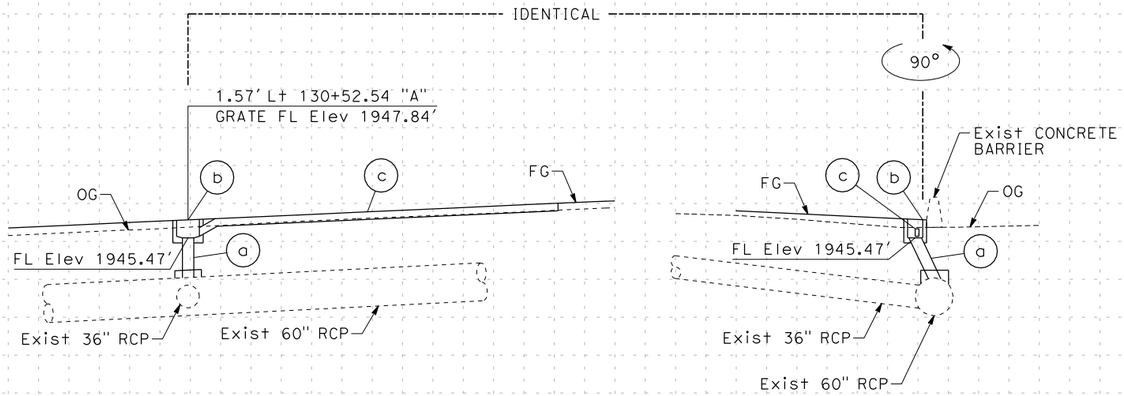

DRAINAGE SYSTEM No. 13

(a) G1 INLET W/24-12 GRATE, H=2.56'
(b) 40.00' GLD
(c) REMOVE INLET

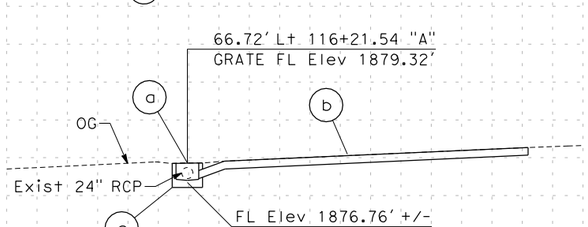

DRAINAGE SYSTEM No. 10

(a) G1 INLET W/24-12 GRATE, H=4.24'
(b) 55.00' GLD
(c) REMOVE INLET

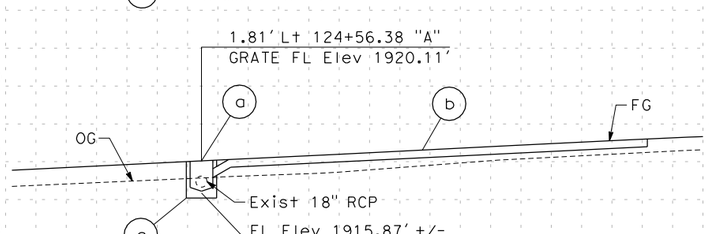

DRAINAGE SYSTEM No. 11

(a) 18" x 7.35' AP RISER W/J-1 COLLAR, SAFETY CAGE (SDDS)
(b) G1 INLET W/24-12 GRATE, H=2.40'
(c) 45.00' GLD

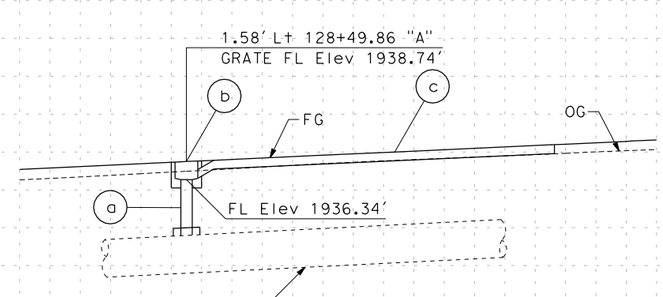

DRAINAGE SYSTEM No. 12

DRAINAGE PROFILE

SCALE Horiz 1"=10'
Vert 1"=10'

DP-5

REVISED BY	DATE REVISED
GREG KEPPLER	GLENN YAMANAKA

CALCULATED-DESIGNED BY / CHECKED BY

CONSULTANT FUNCTIONAL SUPERVISOR: ED KOUZI

STATE OF CALIFORNIA - DEPARTMENT OF TRANSPORTATION

Caltrans

Station | m^3 Exc | Emb

LAST REVISION 11-25-08 | DATE PLOTTED => 6/30/2009 | TIME PLOTTED => 5:34:30 PM

Dist	COUNTY	ROUTE	POST MILES TOTAL PROJECT	SHEET No.	TOTAL SHEETS
8	SBd	10	33.3/R36.9	XXX	XXX

REGISTERED CIVIL ENGINEER DATE

PLANS APPROVAL DATE

REGISTERED PROFESSIONAL ENGINEER GERARD F. DALZIEL No. 36333 Exp 6/30/10 CIVIL STATE OF CALIFORNIA

THE STATE OF CALIFORNIA OR ITS OFFICERS OR AGENTS SHALL NOT BE RESPONSIBLE FOR THE ACCURACY OR COMPLETENESS OF ELECTRONIC COPIES OF THIS PLAN SHEET.

SANBAG
1170 WEST 3RD STREET
2ND FLOOR
SAN BERNARDINO, CA 92410

BOYLE ENGINEERING CORPORATION
1501 QUAIL ST
NEWPORT BEACH, CA 92660

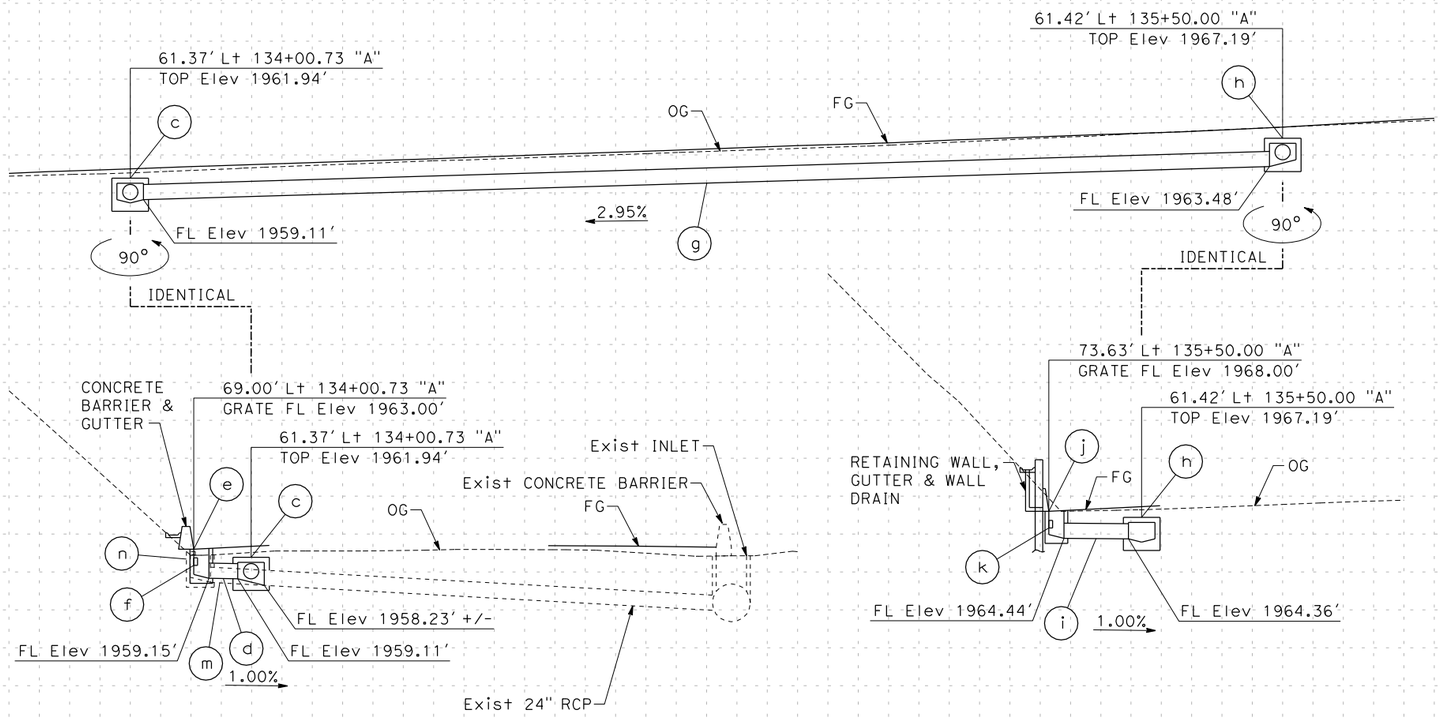

(a) 24" x 2.62' APC W/L-2 COLLAR (SDDS)
(b) G2 INLET W/24-12 GRATE, H=4.13'
(c) 24" x 76.35' APC W/CI 4 Conc Bkf (SDDS)
(q) REMOVE INLET

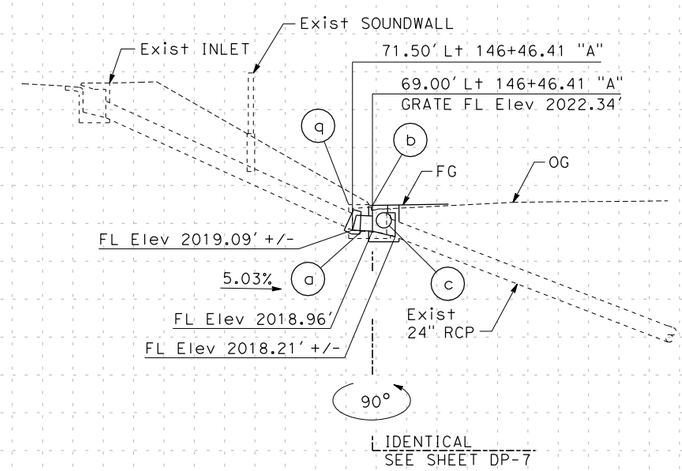

DRAINAGE SYSTEM No. 15

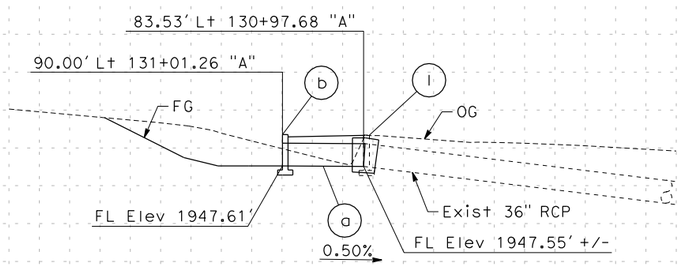

DRAINAGE SYSTEM No. 14

(a) 36" x 10.72' APC W/L-2 COLLAR (SDDS)
(b) "L" HEADWALL, W=9.33'
(c) JUNCTION STRUCTURE, Hb=3.04' (SDDS)
(d) 24" x 3.83' APC
(e) G1 INLET W/24-12 GRATE, H=3.85'
(f) 50.00' GLD
(g) 24" x 148.56' APC
(h) JUNCTION STRUCTURE, Hb=3.04' (SDDS)
(i) 24" x 8.48' APC
(j) G1 INLET W/24-12 GRATE, H=3.56'
(k) 50.00' GLD
(l) REMOVE HEADWALL
(m) REMOVE CULVERT (24" x 7.10' CMP)
(n) REMOVE INLET

DRAINAGE PROFILE

SCALE Horiz 1"=10'
Vert 1"=10'

DP-6

REVISED BY	DATE REVISED
GREG KEPPLER	GLENN YAMANAKA
CALCULATED-DESIGNED BY	CHECKED BY
CONSULTANT FUNCTIONAL SUPERVISOR	ED KOUZI

STATE OF CALIFORNIA - DEPARTMENT OF TRANSPORTATION

Caltrans

Station | m^3 Exc | Emb

LAST REVISION 11-25-08 | DATE PLOTTED => 6/30/2009 | TIME PLOTTED => 5:34:31 PM

6/30/2009 5:34:31PM YamanakaG hy\ch2mhill\17044.00\cad\planset\0f150ib06.dgn

BORDER LAST REVISED 05/28/2008

RELATIVE BORDER SCALE IS IN INCHES 0 1 2 3

USERNAME => YamanakaG
DGN FILE => ...\0f150ib06.dgn

CU 08220

EA 0F1500

Dist	COUNTY	ROUTE	POST MILES TOTAL PROJECT	SHEET No.	TOTAL SHEETS
8	SBd	10	33.3/R36.9	XXX	XXX

REGISTERED CIVIL ENGINEER DATE

PLANS APPROVAL DATE

REGISTERED PROFESSIONAL ENGINEER GERARD F. DALZIEL No. 36333 Exp 6/30/10 CIVIL STATE OF CALIFORNIA

THE STATE OF CALIFORNIA OR ITS OFFICERS OR AGENTS SHALL NOT BE RESPONSIBLE FOR THE ACCURACY OR COMPLETENESS OF ELECTRONIC COPIES OF THIS PLAN SHEET.

SANBAG
1170 WEST 3RD STREET
2ND FLOOR
SAN BERNARDINO, CA 92410

BOYLE ENGINEERING CORPORATION
1501 QUAIL ST
NEWPORT BEACH, CA 92660

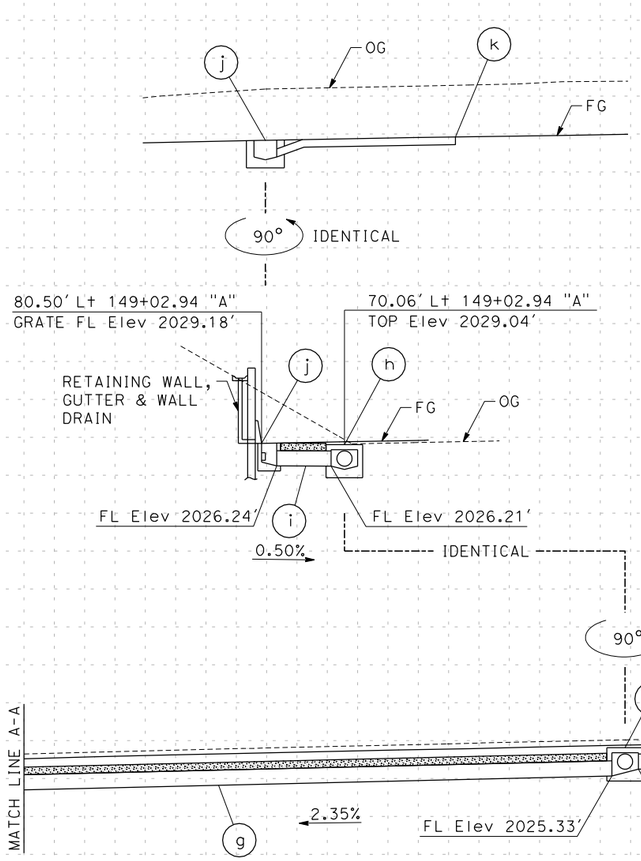

a 24" x 2.62' APC W/L-2 COLLAR (SDDS)
b G2 INLET W/24-12 GRATE, H=4.13'
c 24" x 76.35' APC W/Cl 4 Conc Bkf (SDDS)
d JUNCTION STRUCTURE, Hb=3.04' (SDDS)
e 24" x 9.72' APC W/Cl 4 Conc Bkf (SDDS)
f G1 INLET W/24-12 GRATE, H=3.49'
g 24" x 173.50' APC W/Cl 4 Conc Bkf (SDDS)
h JUNCTION STRUCTURE, Hb=3.04' (SDDS)
i 24" x 7.19' APC W/Cl 4 Conc Bkf (SDDS)
j G1 INLET W/24-12 GRATE, H=2.94'
k 20.00' GLD

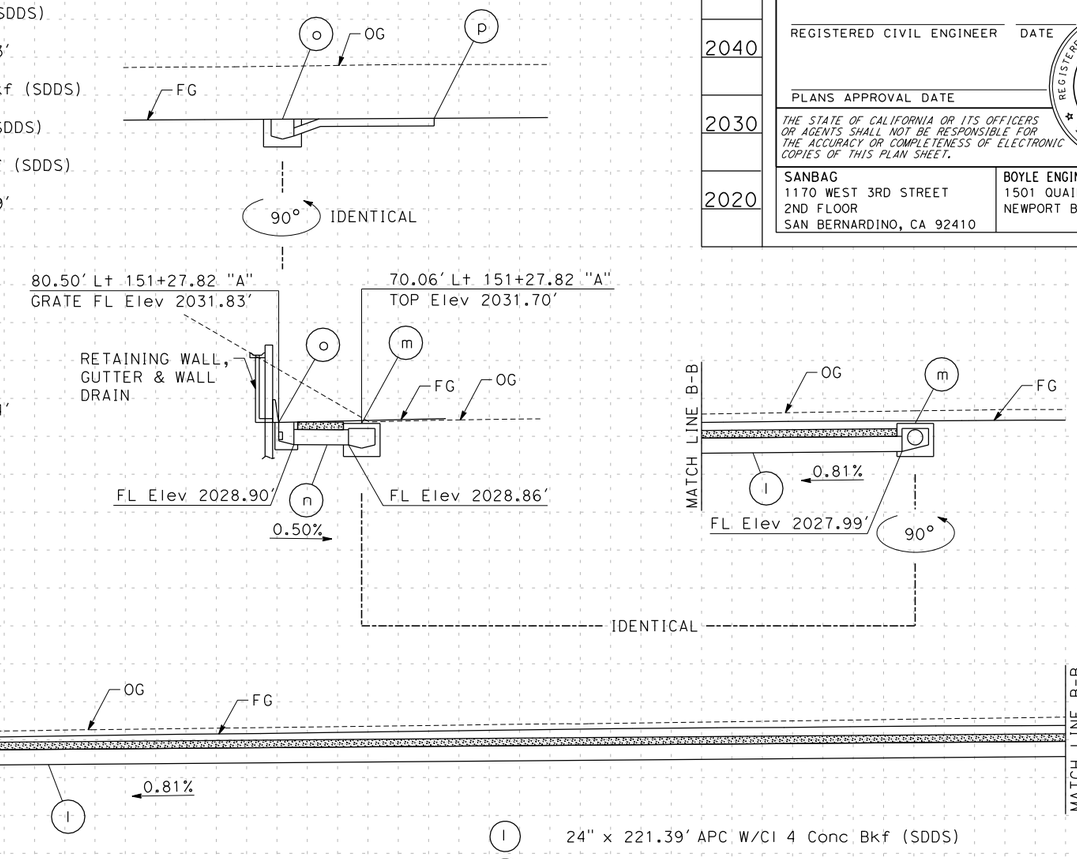

l 24" x 221.39' APC W/Cl 4 Conc Bkf (SDDS)
m JUNCTION STRUCTURE, Hb=3.04' (SDDS)
n 24" x 7.19' APC W/Cl 4 Conc Bkf (SDDS)
o G1 INLET W/24-12 GRATE, H=2.93'
p 15.00' GLD
q REMOVE INLET

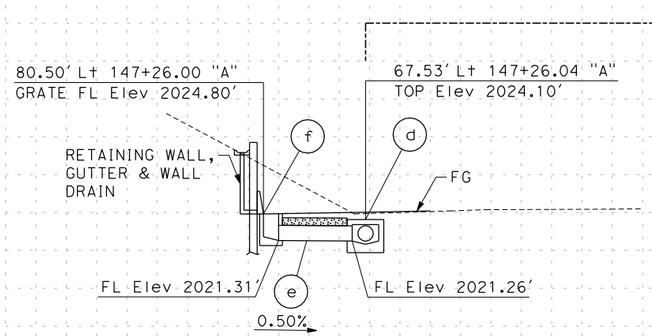

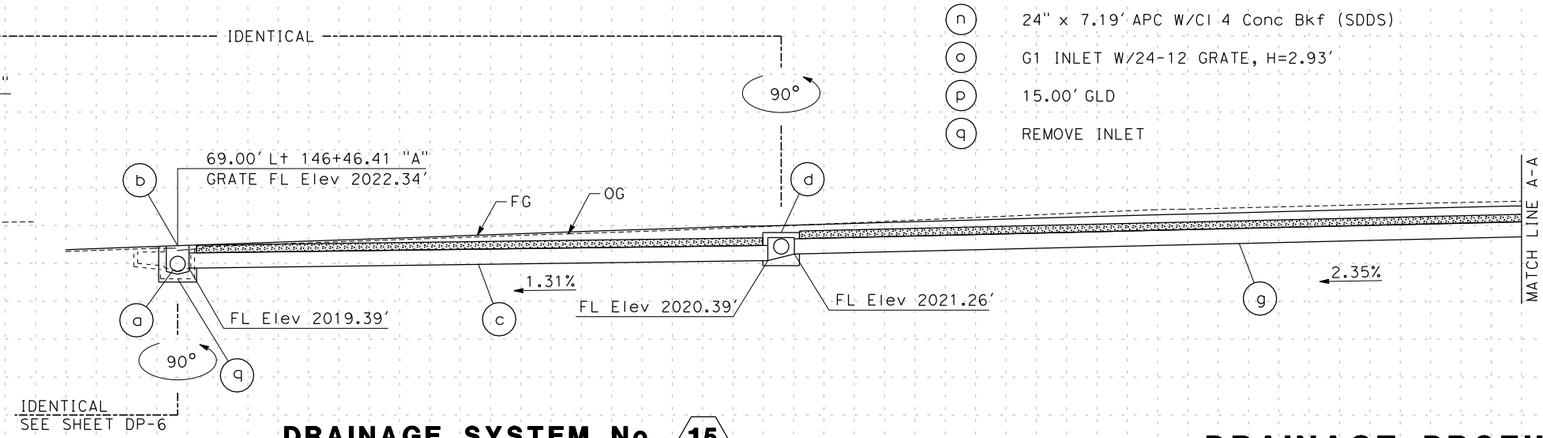

DRAINAGE SYSTEM No. 15

DRAINAGE PROFILE

SCALE Horiz 1"=10'
Vert 1"=10'

DP-7

GREG KEPPLER — GLENN YAMANAKA — CALCULATED-DESIGNED BY — CHECKED BY — CONSULTANT FUNCTIONAL SUPERVISOR — ED KOUZI — REVISED BY — DATE REVISED

STATE OF CALIFORNIA - DEPARTMENT OF TRANSPORTATION — Caltrans

Station | m³ Exc | Emb

LAST REVISION 11-25-08 — DATE PLOTTED => 6/30/2009 TIME PLOTTED => 5:34:31 PM

6/30/2009 5:34:31 PM YamanakaG hs\ch2mhill\1f044,00\cad\planset\0f150ib07.dgn

BORDER LAST REVISED 05/28/2008 — RELATIVE BORDER SCALE IS IN INCHES 0 1 2 3 — USERNAME => YamanakaG DGN FILE => ...\0f150ib07.dgn — CU 08220 — EA 0F1500

Dist	COUNTY	ROUTE	POST MILES TOTAL PROJECT	SHEET No.	TOTAL SHEETS
8	SBd	10	33.3/R36.9	XXX	XXX

REGISTERED CIVIL ENGINEER DATE

PLANS APPROVAL DATE

REGISTERED PROFESSIONAL ENGINEER GERARD F. DALZIEL No. 36333 Exp. 6/30/10 CIVIL STATE OF CALIFORNIA

THE STATE OF CALIFORNIA OR ITS OFFICERS OR AGENTS SHALL NOT BE RESPONSIBLE FOR THE ACCURACY OR COMPLETENESS OF ELECTRONIC COPIES OF THIS PLAN SHEET.

SANBAG
1170 WEST 3RD STREET
2ND FLOOR
SAN BERNARDINO, CA 92410

BOYLE ENGINEERING CORPORATION
1501 QUAIL ST
NEWPORT BEACH, CA 92660

(a) 18" x 14.37' APC W/L-2 COLLAR, Cl 4 Conc Bkf (SDDS)
(b) G1 INLET W/24-12 GRATE, H=2.99'
(c) REMOVE INLET

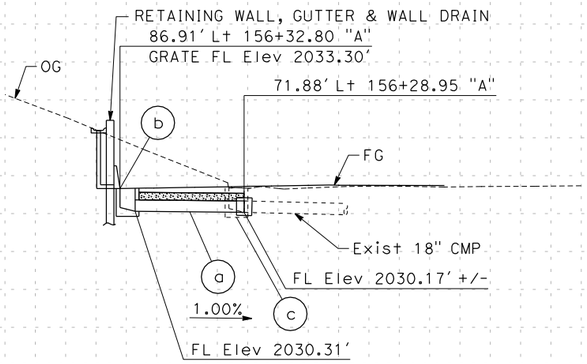

DRAINAGE SYSTEM No. 18

(a) 24" x 14.08' APC W/L-2 COLLAR, Cl 4 Conc Bkf (SDDS)
(b) G1 INLET W/24-12 GRATE, H=3.28'
(c) 15.00' GLD
(d) 24" x 5.00' APC W/L-2 COLLAR (SDDS)
(e) 24" x 20.68' APC W/L-2 COLLAR (SDDS)
(f) REMOVE INLET
(g) REMOVE CULVERT (24" x 33.30' CMP)

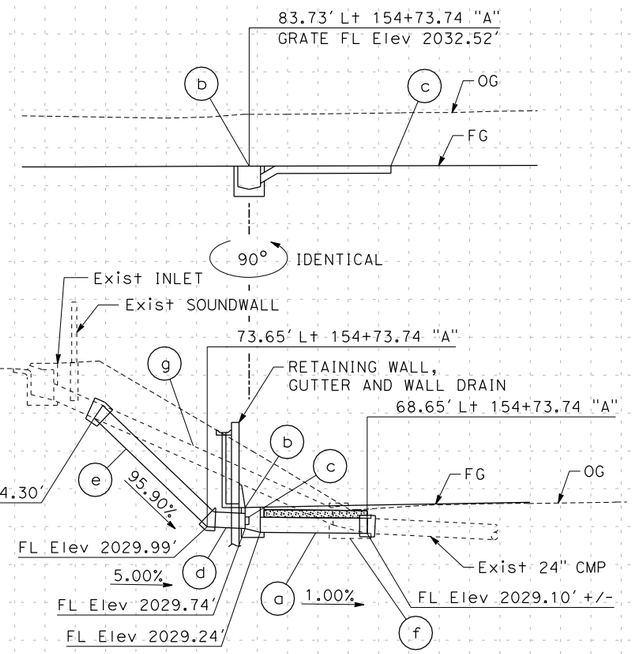

DRAINAGE SYSTEM No. 17

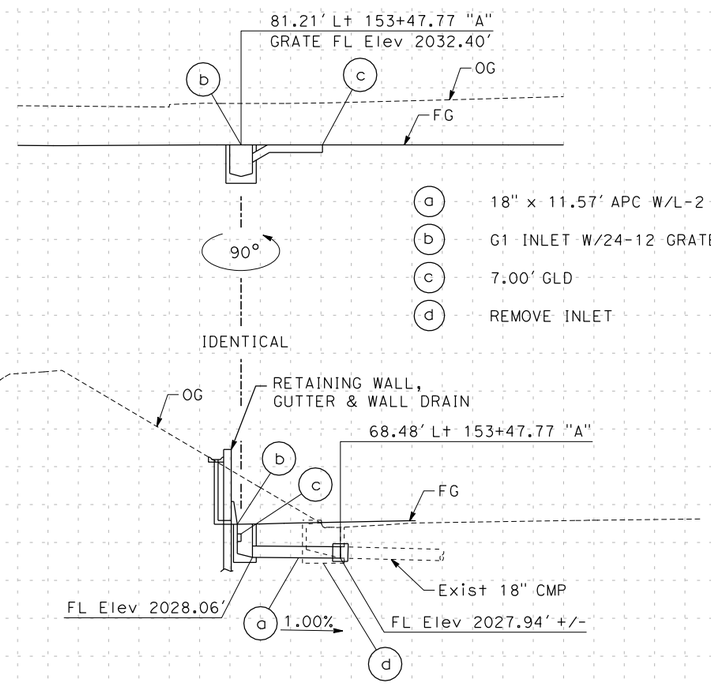

(a) 18" x 11.57' APC W/L-2 COLLAR (SDDS)
(b) G1 INLET W/24-12 GRATE, H=4.34'
(c) 7.00' GLD
(d) REMOVE INLET

DRAINAGE SYSTEM No. 16

DRAINAGE PROFILE

SCALE Horiz 1"=10'
Vert 1"=10'

DP-8

Station	
m^3	Exc
	Emb

STATE OF CALIFORNIA - DEPARTMENT OF TRANSPORTATION
Caltrans

CONSULTANT FUNCTIONAL SUPERVISOR: ED KOUZI
CALCULATED-DESIGNED BY: GREG KEPPLER
CHECKED BY: GLENN YAMANAKA
REVISED BY
DATE REVISED

LAST REVISION 11-25-08
DATE PLOTTED => 7/1/2009
TIME PLOTTED => 9:21:10 AM

7/1/2009 9:21:10 AM yamanakag H:\CH2MHILL\7044.00\CAD\planset\0f150ib08.dgn

BORDER LAST REVISED 05/28/2008

RELATIVE BORDER SCALE IS IN INCHES 0 1 2 3

USERNAME => yamanakag
DGN FILE => ...\0f150ib08.dgn

CU 08220

EA 0F1500

Dist	COUNTY	ROUTE	POST MILES TOTAL PROJECT	SHEET No.	TOTAL SHEETS
8	SBd	10	33.3/R36.9	XXX	XXX

REGISTERED CIVIL ENGINEER DATE

PLANS APPROVAL DATE

REGISTERED PROFESSIONAL ENGINEER GERARD F. DALZIEL No. 36333 Exp 6/30/10 CIVIL STATE OF CALIFORNIA

THE STATE OF CALIFORNIA OR ITS OFFICERS OR AGENTS SHALL NOT BE RESPONSIBLE FOR THE ACCURACY OR COMPLETENESS OF ELECTRONIC COPIES OF THIS PLAN SHEET.

SANBAG
1170 WEST 3RD STREET
2ND FLOOR
SAN BERNARDINO, CA 92410

BOYLE ENGINEERING CORPORATION
1501 QUAIL ST
NEWPORT BEACH, CA 92660

(a) CAP INLET (SDDS)
(b) 24" x 4.15' APC W/L-3 COLLAR (SDDS)
(c) GT3 INLET W/2x24-12 GRATES, H=3.93'
(d) 24" x 11.47' APC W/L-2 COLLAR (SDDS)
(e) 24" x 65.27' APC W/L-3 COLLAR (SDDS)
(f) CI 4 Conc Bkf (SDDS)
(g) 18" x 40.98' APC W/L-2 COLLAR, CI 4 Conc Bkf (SDDS)
(h) GCP INLET W/36R GRATE, H=3.85'
(i) REMOVE CULVERT (36" x 82.50' CMP)

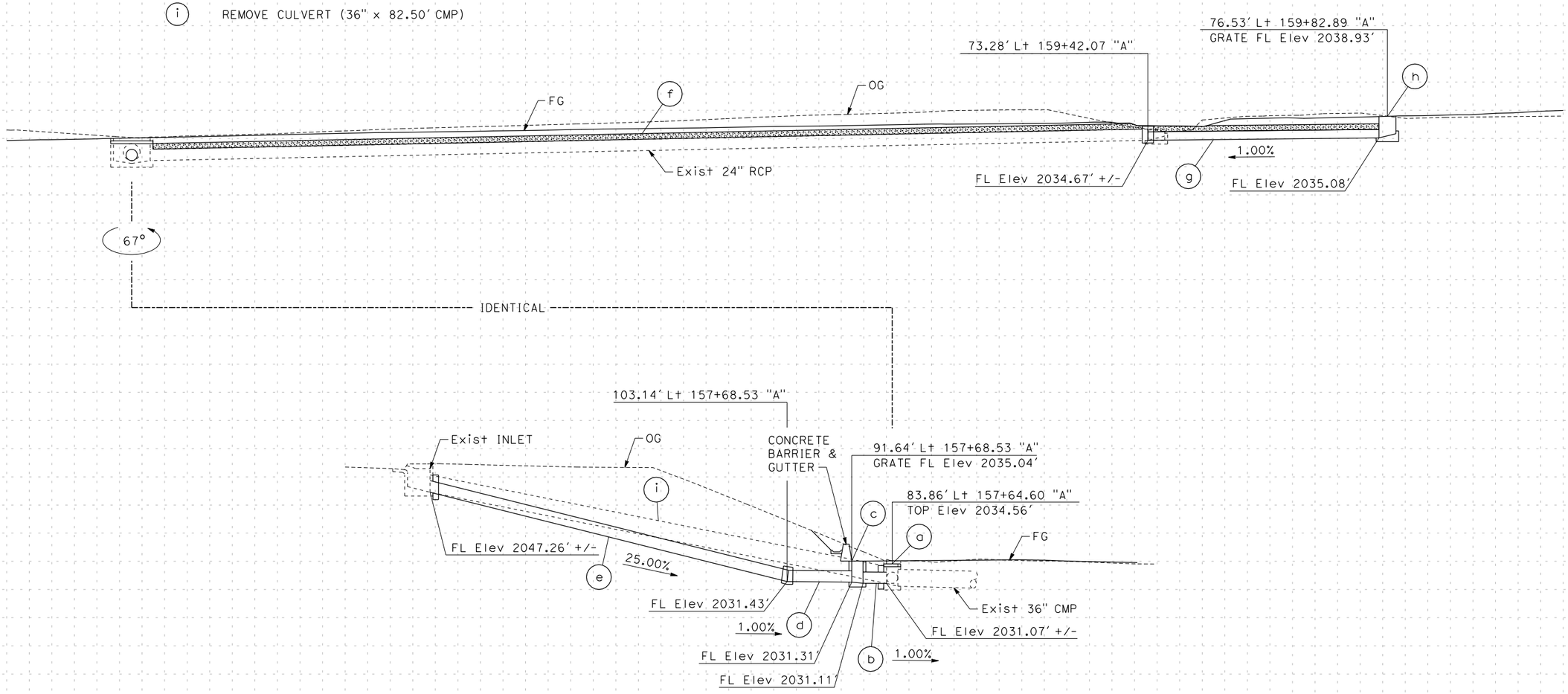

DRAINAGE SYSTEM No. 19

DRAINAGE PROFILE

SCALE Horiz 1"=10'
Vert 1"=10'

DP-9

Station	
m^3 Exc	
m^3 Emb	

STATE OF CALIFORNIA - DEPARTMENT OF TRANSPORTATION

CONSULTANT FUNCTIONAL SUPERVISOR: ED KOUZI

CALCULATED-DESIGNED BY: GREG KEPPLER

CHECKED BY: GLENN YAMANAKA

REVISED BY / DATE REVISED

LAST REVISION 11-25-08

DATE PLOTTED => 7/1/2009
TIME PLOTTED => 9:21:27 AM

7/1/2009 9:21:27 AM yamanakag H:\CH2MHILL\17044.00\CAD\planset\0f150ib09.dgn

BORDER LAST REVISED 05/28/2008

RELATIVE BORDER SCALE IS IN INCHES 0 1 2 3

USERNAME => yamanakag
DGN FILE => ...\0f150ib09.dgn

CU 08220

EA 0F1500

Dist	COUNTY	ROUTE	POST MILES TOTAL PROJECT	SHEET No.	TOTAL SHEETS
8	SBd	10	33.3/R36.9	XXX	XXX

REGISTERED CIVIL ENGINEER DATE

PLANS APPROVAL DATE

REGISTERED PROFESSIONAL ENGINEER GERARD F. DALZIEL No. 36333 Exp 6/30/10 CIVIL STATE OF CALIFORNIA

THE STATE OF CALIFORNIA OR ITS OFFICERS OR AGENTS SHALL NOT BE RESPONSIBLE FOR THE ACCURACY OR COMPLETENESS OF ELECTRONIC COPIES OF THIS PLAN SHEET.

SANBAG
1170 WEST 3RD STREET
2ND FLOOR
SAN BERNARDINO, CA 92410

BOYLE ENGINEERING CORPORATION
1501 QUAIL ST
NEWPORT BEACH, CA 92660

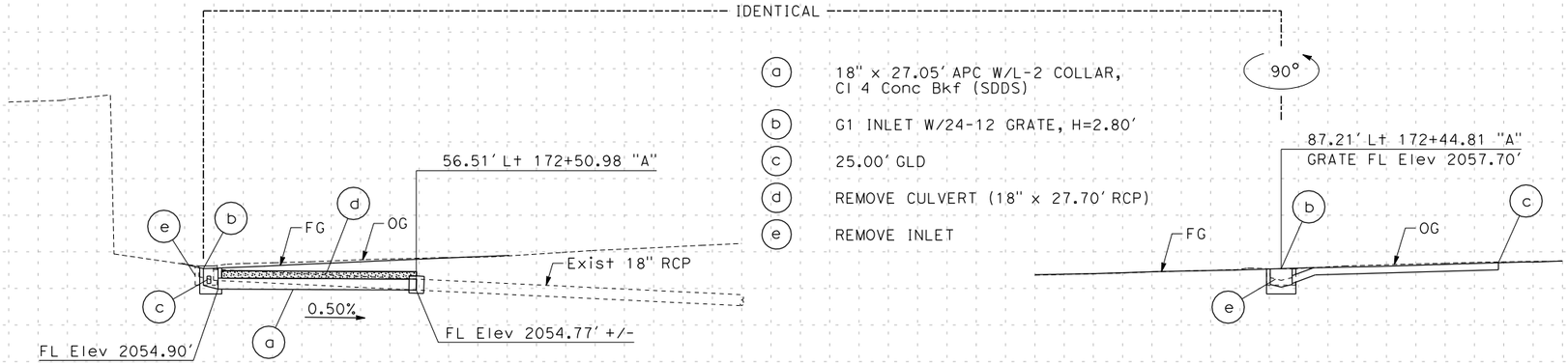

(a) 18" x 27.05' APC W/L-2 COLLAR, CI 4 Conc Bkf (SDDS)
(b) G1 INLET W/24-12 GRATE, H=2.80'
(c) 25.00' GLD
(d) REMOVE CULVERT (18" x 27.70' RCP)
(e) REMOVE INLET

DRAINAGE SYSTEM No. 22

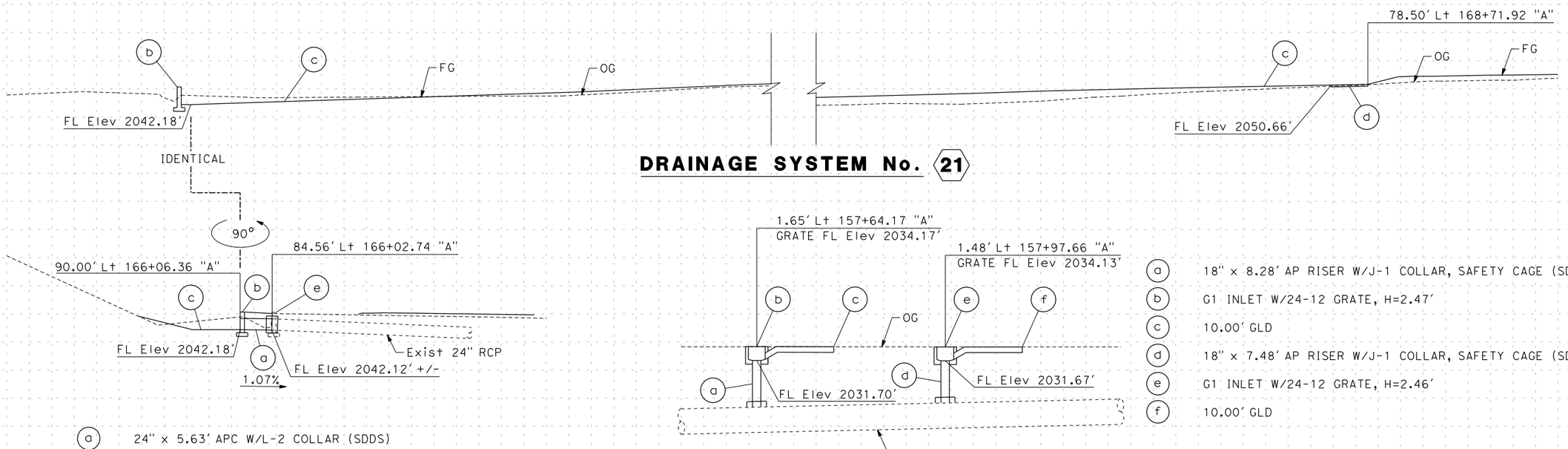

DRAINAGE SYSTEM No. 21

(a) 24" x 5.63' APC W/L-2 COLLAR (SDDS)
(b) "L" HEADWALL, W=6.33'
(c) 266.11' BIOFILTRATION SWALE (SDDS)
(d) CONCRETE SPILLWAY (SDDS)
(e) REMOVE HEADWALL

DRAINAGE SYSTEM No. 20

(a) 18" x 8.28' AP RISER W/J-1 COLLAR, SAFETY CAGE (SDDS)
(b) G1 INLET W/24-12 GRATE, H=2.47'
(c) 10.00' GLD
(d) 18" x 7.48' AP RISER W/J-1 COLLAR, SAFETY CAGE (SDDS)
(e) G1 INLET W/24-12 GRATE, H=2.46'
(f) 10.00' GLD

DRAINAGE PROFILE

SCALE Horiz 1"=10' Vert 1"=10'

DP-10

REVISED BY | DATE REVISED
GREG KEPPLER | GLENN YAMANAKA
CALCULATED-DESIGNED BY | CHECKED BY
CONSULTANT FUNCTIONAL SUPERVISOR | ED KOUZI
STATE OF CALIFORNIA - DEPARTMENT OF TRANSPORTATION
Caltrans

Station | m³ Exc | Emb

DATE PLOTTED => 6/30/2009
TIME PLOTTED => 5:34:36 PM
LAST REVISION 11-25-08

6/30/2009 5:34:36 PM YamanakaG h:\ch2mhill\1f044.00\cad\planset\0f150ib10.dgn
BORDER LAST REVISED 05/28/2008
RELATIVE BORDER SCALE IS IN INCHES 0 1 2 3
USERNAME => YamanakaG
DGN FILE => ...\0f150ib10.dgn
CU 08220
EA 0F1500

Dist	COUNTY	ROUTE	POST MILES TOTAL PROJECT	SHEET No.	TOTAL SHEETS
8	SBd	10	33.3/R36.9	XXX	XXX

REGISTERED CIVIL ENGINEER DATE

PLANS APPROVAL DATE

REGISTERED PROFESSIONAL ENGINEER GERARD F. DALZIEL No. 36333 Exp 6/30/10 CIVIL STATE OF CALIFORNIA

THE STATE OF CALIFORNIA OR ITS OFFICERS OR AGENTS SHALL NOT BE RESPONSIBLE FOR THE ACCURACY OR COMPLETENESS OF ELECTRONIC COPIES OF THIS PLAN SHEET.

SANBAG
1170 WEST 3RD STREET
2ND FLOOR
SAN BERNARDINO, CA 92410

BOYLE ENGINEERING CORPORATION
1501 QUAIL ST
NEWPORT BEACH, CA 92660

(a) MANHOLE 322, H=6.00', W/36" x 6.95' AP RISER, MH F & C (SDDS)
(b) 18" x 46.70' APC
(c) G1 INLET W/24-12 GRATE, H=3.00'
(d) CONCRETE APRON - TYPE B (SDDS)
(e) 337.63' CONCRETE CHANNEL (SDDS)

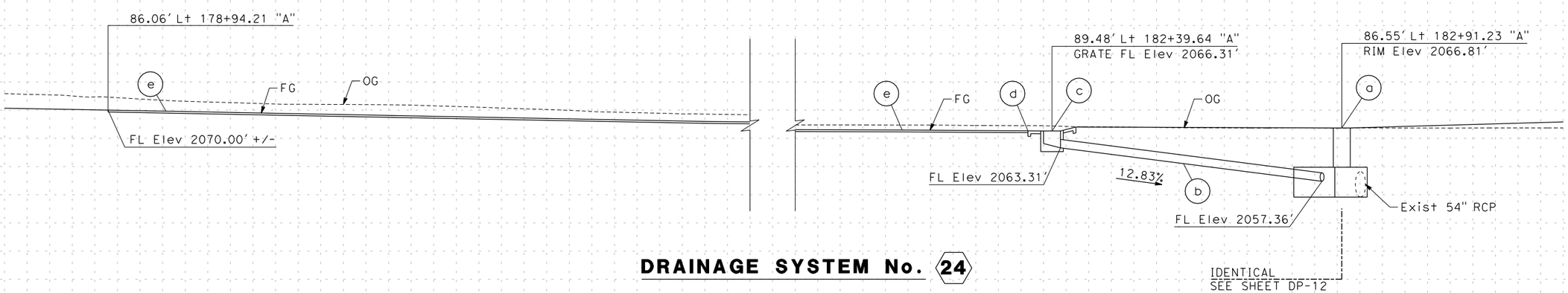

DRAINAGE SYSTEM No. 24

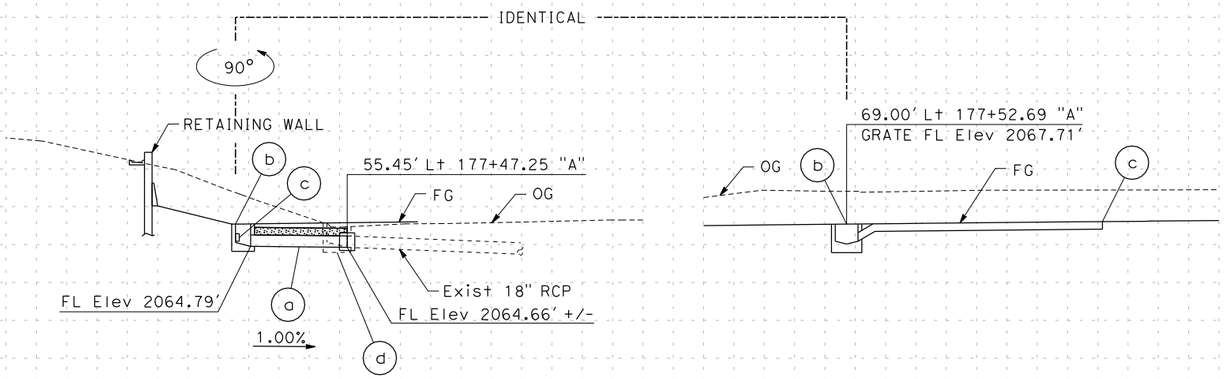

(a) 18" x 12.72' APC W/L-2 COLLAR, CI 4 Conc Bkf (SDDS)
(b) G1 INLET W/24-12 GRATE, H=2.92'
(c) 30.00' GLD
(d) REMOVE INLET

DRAINAGE SYSTEM No. 23

DRAINAGE PROFILE

SCALE Horiz 1"=10'
Vert 1"=10'

DP-11

REVISED BY | DATE REVISED
GREG KEPPLER | GLENN YAMANAKA
CALCULATED-DESIGNED BY | CHECKED BY
CONSULTANT FUNCTIONAL SUPERVISOR | ED KOUZI
STATE OF CALIFORNIA - DEPARTMENT OF TRANSPORTATION
Caltrans

Station
m³ Exc
Emb

LAST REVISION 11-25-08 | DATE PLOTTED => 6/30/2009 | TIME PLOTTED => 5:34:37 PM

6/30/2009 5:34:37 PM YamanakaG h:\ch2mhill\17044.00\cad\planset\0f150ib11.dgn
BORDER LAST REVISED 05/28/2008

RELATIVE BORDER SCALE IS IN INCHES 0 1 2 3

USERNAME => YamanakaG
DGN FILE => ...\0f150ib11.dgn

CU 08220 | EA 0F1500

Dist	COUNTY	ROUTE	POST MILES TOTAL PROJECT	SHEET No.	TOTAL SHEETS
8	SBd	10	33.3/R36.9	XXX	XXX

REGISTERED CIVIL ENGINEER DATE

PLANS APPROVAL DATE

REGISTERED PROFESSIONAL ENGINEER GERARD F. DALZIEL No. 36333 Exp 6/30/10 CIVIL STATE OF CALIFORNIA

THE STATE OF CALIFORNIA OR ITS OFFICERS OR AGENTS SHALL NOT BE RESPONSIBLE FOR THE ACCURACY OR COMPLETENESS OF ELECTRONIC COPIES OF THIS PLAN SHEET.

SANBAG
1170 WEST 3RD STREET
2ND FLOOR
SAN BERNARDINO, CA 92410

BOYLE ENGINEERING CORPORATION
1501 QUAIL ST
NEWPORT BEACH, CA 92660

(a) MANHOLE 322, H=6.00', W/36" x 6.95' AP RISER, MH F & C (SDDS)
(f) 42" x 50.24' APC
(g) JUNCTION STRUCTURE, Hb=5.55', W/MH F & C (SDDS)
(h) 18" x 3.82' APC
(i) GT3 INLET W/2x24-12 GRATES, H=3.00'
(j) 42" x 248.77' APC
(k) JUNCTION STRUCTURE, Hb=5.39', W/MH F & C (SDDS)
(l) 18" x 3.83' APC
(m) GT3 INLET W/2x24-12 GRATES, H=3.00'
(n) 42" x 215.65' APC
(v) CURB (TYPE A2-8) (SDDS)
(w) REMOVE CONCRETE CHANNEL

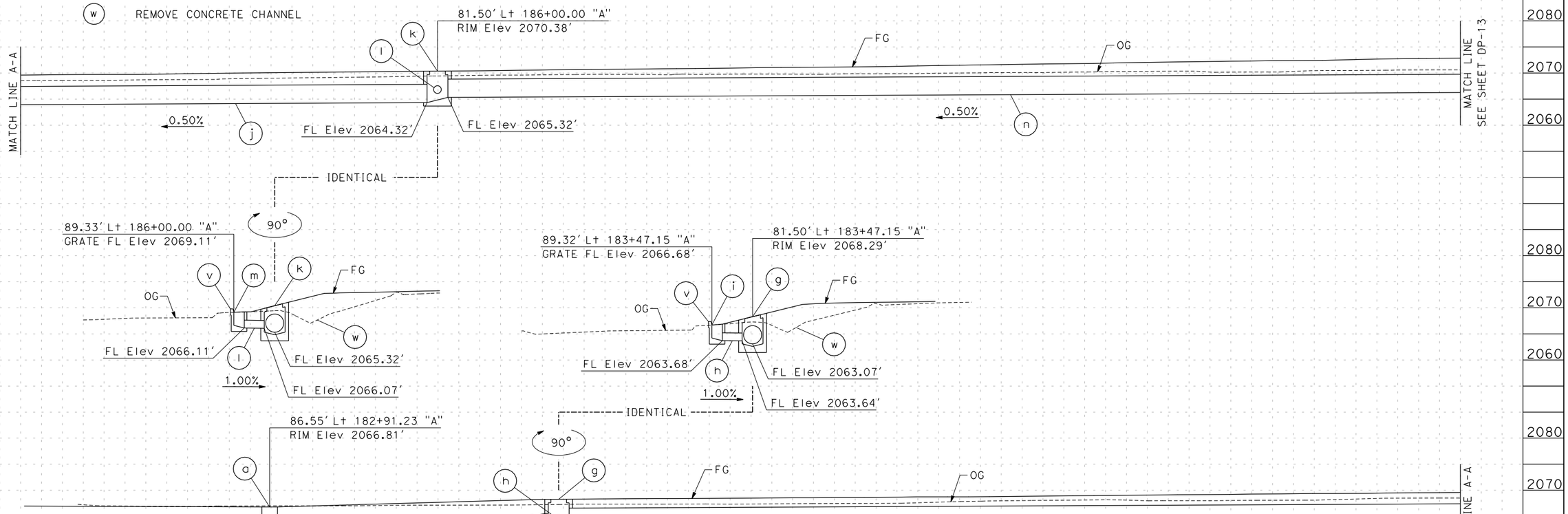

DRAINAGE SYSTEM No. 24

DRAINAGE PROFILE

SCALE Horiz 1"=10'
Vert 1"=10'

DP-12

Station	
m^3 Exc	
m^3 Emb	

STATE OF CALIFORNIA - DEPARTMENT OF TRANSPORTATION
Caltrans

CONSULTANT FUNCTIONAL SUPERVISOR: ED KOUZI
CALCULATED-DESIGNED BY: GREG KEPPLER
CHECKED BY: GLENN YAMANAKA
REVISED BY
DATE REVISED

LAST REVISION 11-25-08
DATE PLOTTED => 6/30/2009
TIME PLOTTED => 5:34:38 PM

6/30/2009 5:34:38 PM YamanakaG hs\ch2mhill\17044.00\cad\planset\0f150ib12.dgn
BORDER LAST REVISED 05/28/2008

RELATIVE BORDER SCALE IS IN INCHES 0 1 2 3

USERNAME => YamanakaG
DGN FILE => ...\0f150ib12.dgn

CU 08220

EA 0F1500

Dist	COUNTY	ROUTE	POST MILES TOTAL PROJECT	SHEET No.	TOTAL SHEETS
8	SBd	10	33.3/R36.9	XXX	XXX

REGISTERED CIVIL ENGINEER DATE

PLANS APPROVAL DATE

REGISTERED PROFESSIONAL ENGINEER GERARD F. DALZIEL No. 36333 Exp 6/30/10 CIVIL STATE OF CALIFORNIA

THE STATE OF CALIFORNIA OR ITS OFFICERS OR AGENTS SHALL NOT BE RESPONSIBLE FOR THE ACCURACY OR COMPLETENESS OF ELECTRONIC COPIES OF THIS PLAN SHEET.

SANBAG
1170 WEST 3RD STREET
2ND FLOOR
SAN BERNARDINO, CA 92410

BOYLE ENGINEERING CORPORATION
1501 QUAIL ST
NEWPORT BEACH, CA 92660

(d) JUNCTION STRUCTURE, Hb=3.00', W/36" x 9.40' AP RISER, 36R GRATE (SDDS)
(e) CONCRETE APRON - TYPE C (SDDS)
(g) 18" x 187.60' APC
(h) GCP INLET W/36R GRATE, H=3.50'
(i) CONCRETE APRON - TYPE C (SDDS)

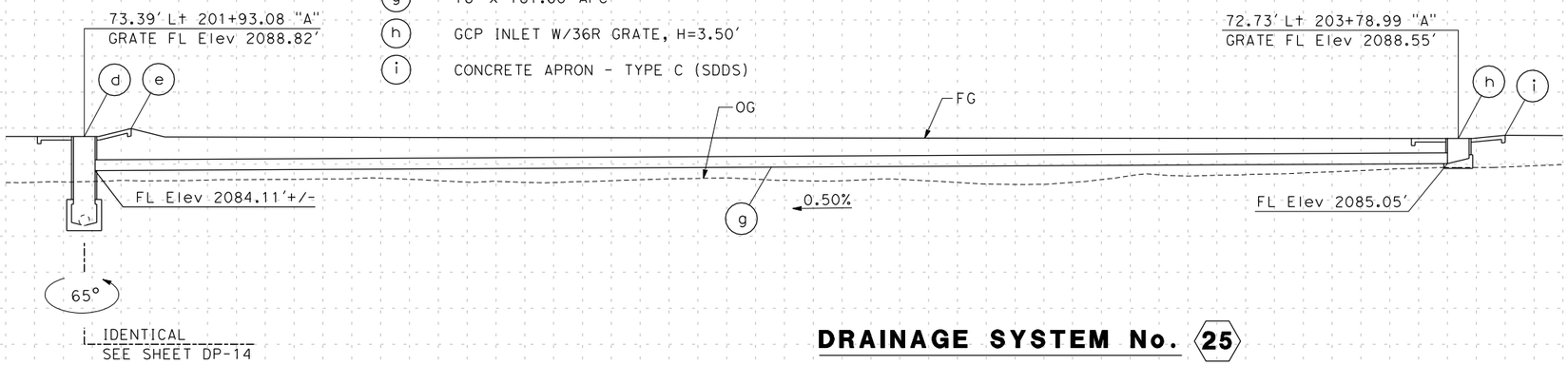

DRAINAGE SYSTEM No. 25

(n) 42" x 215.65' APC
(o) JUNCTION STRUCTURE, Hb=6.01', W/MH F & C (SDDS)
(p) 24" x 10.98' APC W/L-2 COLLAR (SDDS)
(q) 42" x 78.30' APC
(r) JUNCTION STRUCTURE, Hb=3.68', W/MH F & C (SDDS)
(s) 18" x 46.39' APC
(t) GCP INLET W/36R GRATE, H=3.11'
(u) CONCRETE APRON - TYPE A (SDDS)
(v) CURB (TYPE A2-8) (SDDS)
(w) REMOVE CONCRETE CHANNEL

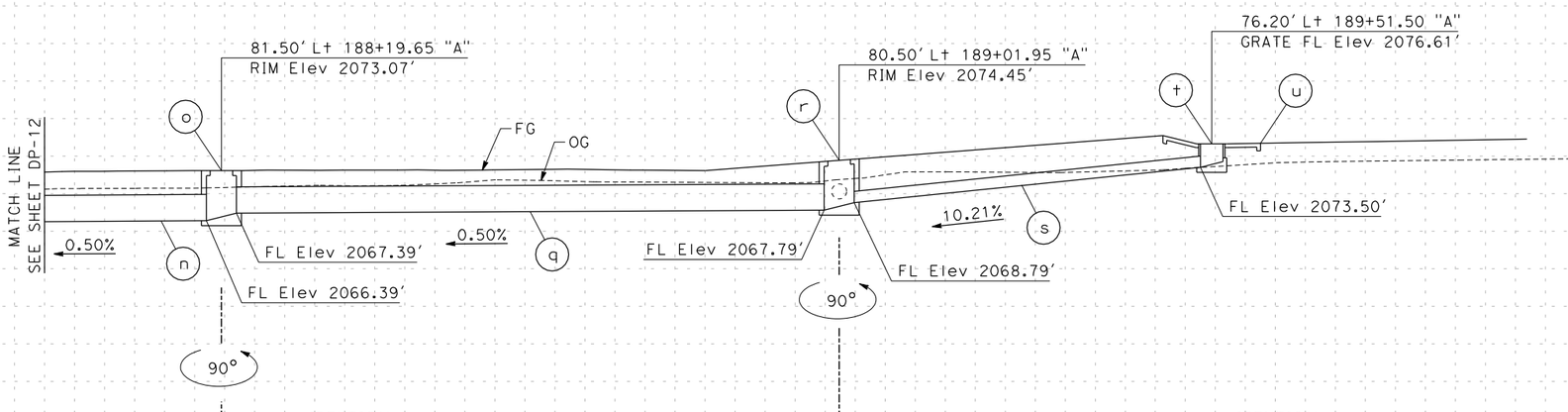

IDENTICAL

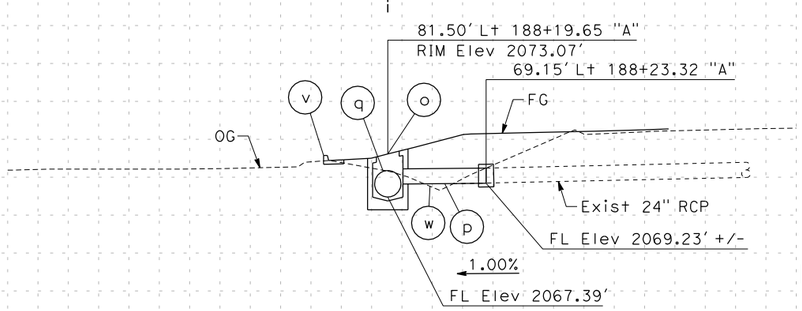

DRAINAGE SYSTEM No. 24

IDENTICAL

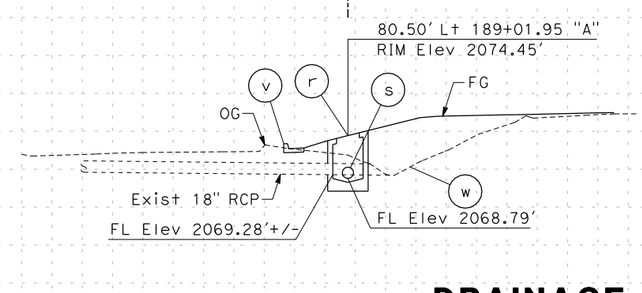

DRAINAGE PROFILE

SCALE Horiz 1"=10'
Vert 1"=10'

DP-13

REVISED BY	DATE REVISED
GREG KEPPLER	GLENN YAMANAKA

CALCULATED-DESIGNED BY / CHECKED BY

CONSULTANT FUNCTIONAL SUPERVISOR: ED KOUZI

STATE OF CALIFORNIA - DEPARTMENT OF TRANSPORTATION

Caltrans

Station	
m^3	Exc
	Emb

LAST REVISION 11-25-08 | DATE PLOTTED => 6/30/2009 | TIME PLOTTED => 5:34:38 PM

6/30/2009 5:34:38 PM YamanakaG hs\ch2mhill\1044,00\cad\planset\0f150ib13.dgn

BORDER LAST REVISED 05/28/2008

RELATIVE BORDER SCALE IS IN INCHES 0 1 2 3

USERNAME => YamanakaG
DGN FILE => ...\0f150ib13.dgn

CU 08220

EA 0F1500

Dist	COUNTY	ROUTE	POST MILES TOTAL PROJECT	SHEET No.	TOTAL SHEETS
8	SBd	10	33.3/R36.9	XXX	XXX

REGISTERED CIVIL ENGINEER DATE

PLANS APPROVAL DATE

REGISTERED PROFESSIONAL ENGINEER GERARD F. DALZIEL No. 36333 Exp 6/30/10 CIVIL STATE OF CALIFORNIA

THE STATE OF CALIFORNIA OR ITS OFFICERS OR AGENTS SHALL NOT BE RESPONSIBLE FOR THE ACCURACY OR COMPLETENESS OF ELECTRONIC COPIES OF THIS PLAN SHEET.

SANBAG
1170 WEST 3RD STREET
2ND FLOOR
SAN BERNARDINO, CA 92410

BOYLE ENGINEERING CORPORATION
1501 QUAIL ST
NEWPORT BEACH, CA 92660

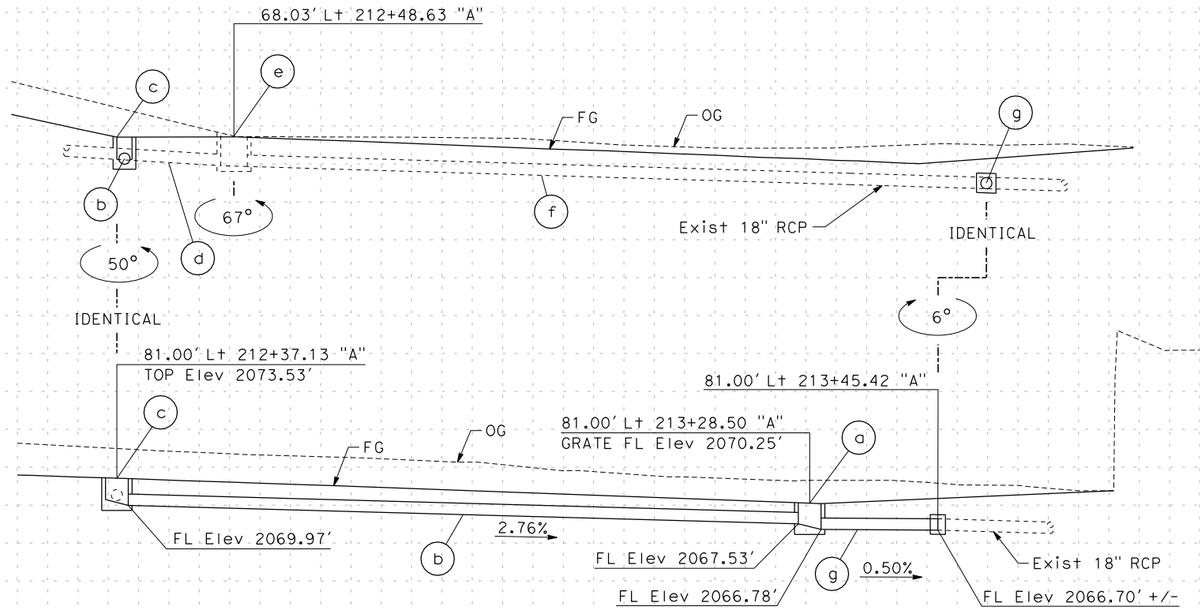

(a) G1 INLET W/24-12 GRATE, H=3.47'
(b) 18" x 88.41' APC
(c) G1 INLET W/24-12 GRATE, H=3.56'
(d) REMOVE CULVERT (18" x 13.70' RCP)
(e) REMOVE INLET
(f) REMOVE CULVERT (18" x 97.50' RCP)
(g) 18" x 15.43' APC W/L-2 COLLAR (SDDS)

DRAINAGE SYSTEM No. 26

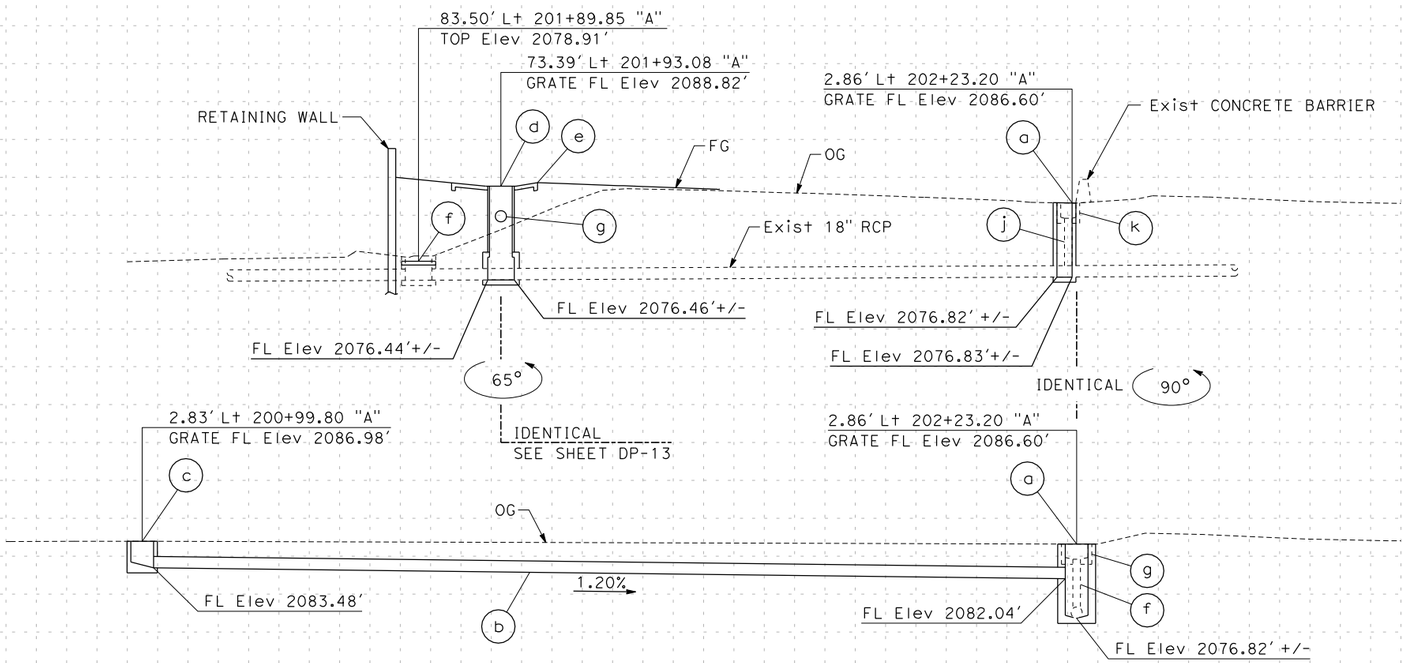

(a) G2 INLET W/24-12 GRATE, H=9.78'
(b) 18" x 120.23' APC
(c) G1 INLET W/24-12 GRATE, H=3.50'
(d) JUNCTION STRUCTURE, Hb=3.00', W/36" x 9.40' AP RISER, 36R GRATE (SDDS)
(e) CONCRETE APRON - TYPE C (SDDS)
(f) CAP INLET (SDDS)
(g) 18" x 187.60' APC
(j) REMOVE CULVERT (12" x 6.30' CSP RISER)
(k) REMOVE INLET

DRAINAGE SYSTEM No. 25

DRAINAGE PROFILE

SCALE Horiz 1"=10'
Vert 1"=10'

DP-14

REVISED BY | DATE REVISED
GREG KEPPLER | GLENN YAMANAKA
CALCULATED-DESIGNED BY | CHECKED BY
CONSULTANT FUNCTIONAL SUPERVISOR
ED KOUZI
STATE OF CALIFORNIA - DEPARTMENT OF TRANSPORTATION
Caltrans

Station
m³ Exc
Emb

LAST REVISION 11-25-08 | DATE PLOTTED => 6/30/2009 | TIME PLOTTED => 5:34:39 PM

6/30/2009 5:34:39 PM YamanakaG hs\ch2mhill\1f044,00\cad\planset\0f150ib14.dgn
BORDER LAST REVISED 05/28/2008

RELATIVE BORDER SCALE IS IN INCHES 0 1 2 3

USERNAME => YamanakaG
DGN FILE => ...\0f150ib14.dgn

CU 08220 | EA 0F1500

Dist	COUNTY	ROUTE	POST MILES TOTAL PROJECT	SHEET No.	TOTAL SHEETS
8	SBd	10	33.3/R36.9	XXX	XXX

REGISTERED CIVIL ENGINEER DATE

PLANS APPROVAL DATE

REGISTERED PROFESSIONAL ENGINEER GERARD F. DALZIEL No. 36333 Exp 6/30/10 CIVIL STATE OF CALIFORNIA

THE STATE OF CALIFORNIA OR ITS OFFICERS OR AGENTS SHALL NOT BE RESPONSIBLE FOR THE ACCURACY OR COMPLETENESS OF ELECTRONIC COPIES OF THIS PLAN SHEET.

SANBAG
1170 WEST 3RD STREET
2ND FLOOR
SAN BERNARDINO, CA 92410

BOYLE ENGINEERING CORPORATION
1501 QUAIL ST
NEWPORT BEACH, CA 92660

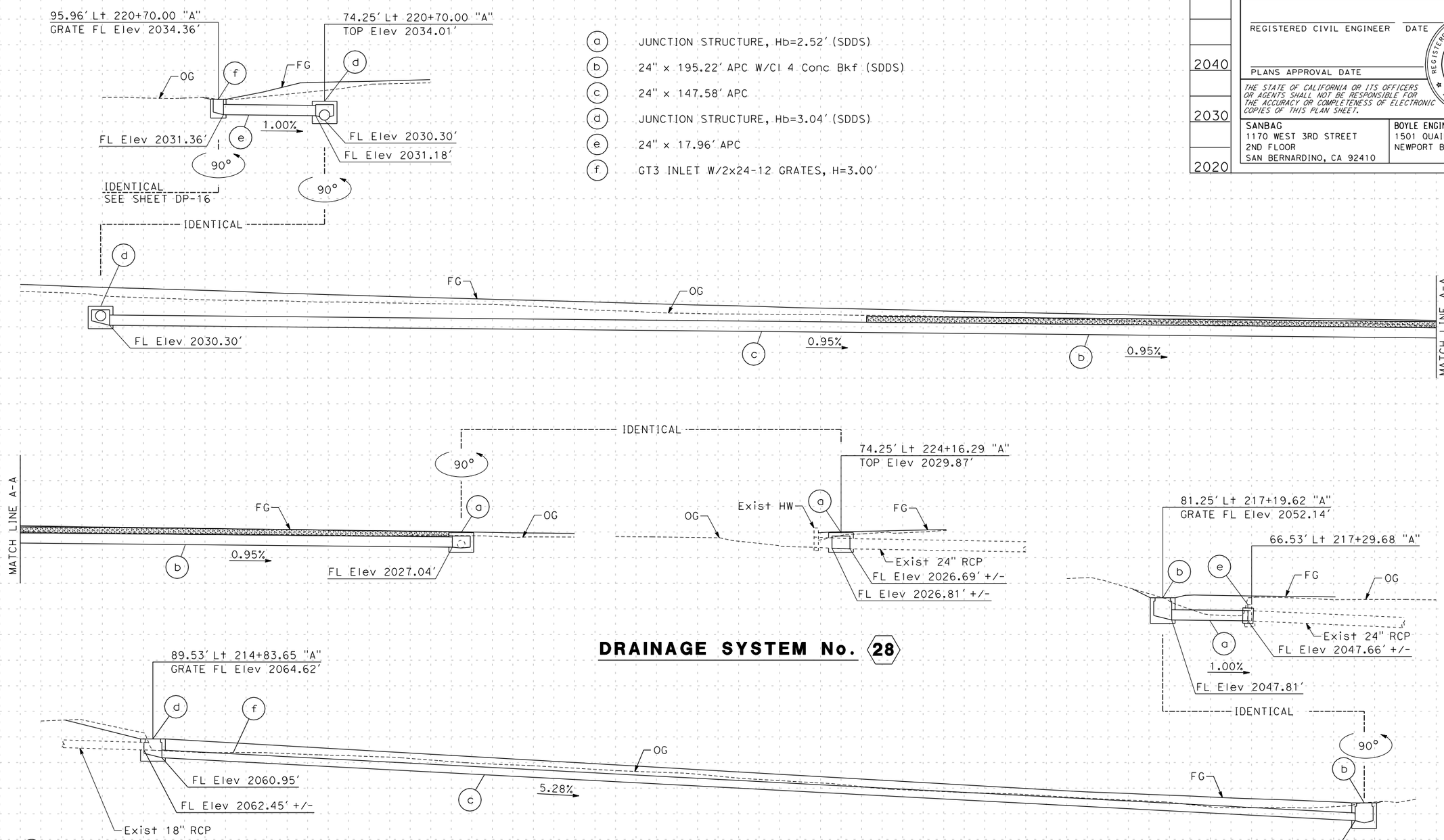

(a) JUNCTION STRUCTURE, Hb=2.52' (SDDS)
(b) 24" x 195.22' APC W/Cl 4 Conc Bkf (SDDS)
(c) 24" x 147.58' APC
(d) JUNCTION STRUCTURE, Hb=3.04' (SDDS)
(e) 24" x 17.96' APC
(f) GT3 INLET W/2x24-12 GRATES, H=3.00'

DRAINAGE SYSTEM No. 28

(a) 24" x 14.84' APC W/L-2 COLLAR (SDDS)
(b) JUNCTION STRUCTURE, Hb=3.66', W/36R GRATE (SDDS)
(c) 18" x 232.94' APC
(d) JUNCTION STRUCTURE, Hb=3.00', W/36R GRATE (SDDS)
(e) REMOVE HEADWALL
(f) REMOVE CONCRETE CHANNEL

DRAINAGE SYSTEM No. 27

DRAINAGE PROFILE

SCALE Horiz 1"=10'
Vert 1"=10'

DP-15

REVISED BY	DATE REVISED
GREG KEPPLER	GLENN YAMANAKA
CALCULATED-DESIGNED BY	CHECKED BY
CONSULTANT FUNCTIONAL SUPERVISOR	ED KOUZI

STATE OF CALIFORNIA - DEPARTMENT OF TRANSPORTATION

Caltrans

Station	
m^3	Exc
	Emb

6/30/2009 5:34:40 PM YamanakaG hs\ch2mhill\17044.00\cad\planset\0f150ib15.dgn

BORDER LAST REVISED 05/28/2008

RELATIVE BORDER SCALE IS IN INCHES 0 1 2 3

USERNAME => YamanakaG
DGN FILE => ...\0f150ib15.dgn

CU 08220

EA 0F1500

LAST REVISION 11-25-08

DATE PLOTTED => 6/30/2009
TIME PLOTTED => 5:34:40 PM

Dist	COUNTY	ROUTE	POST MILES TOTAL PROJECT	SHEET No.	TOTAL SHEETS
8	SBd	10	33.3/R36.9	XXX	XXX

REGISTERED CIVIL ENGINEER DATE

PLANS APPROVAL DATE

REGISTERED PROFESSIONAL ENGINEER GERARD F. DALZIEL No. 36333 Exp 6/30/10 CIVIL STATE OF CALIFORNIA

THE STATE OF CALIFORNIA OR ITS OFFICERS OR AGENTS SHALL NOT BE RESPONSIBLE FOR THE ACCURACY OR COMPLETENESS OF ELECTRONIC COPIES OF THIS PLAN SHEET.

SANBAG
1170 WEST 3RD STREET
2ND FLOOR
SAN BERNARDINO, CA 92410

BOYLE ENGINEERING CORPORATION
1501 QUAIL ST
NEWPORT BEACH, CA 92660

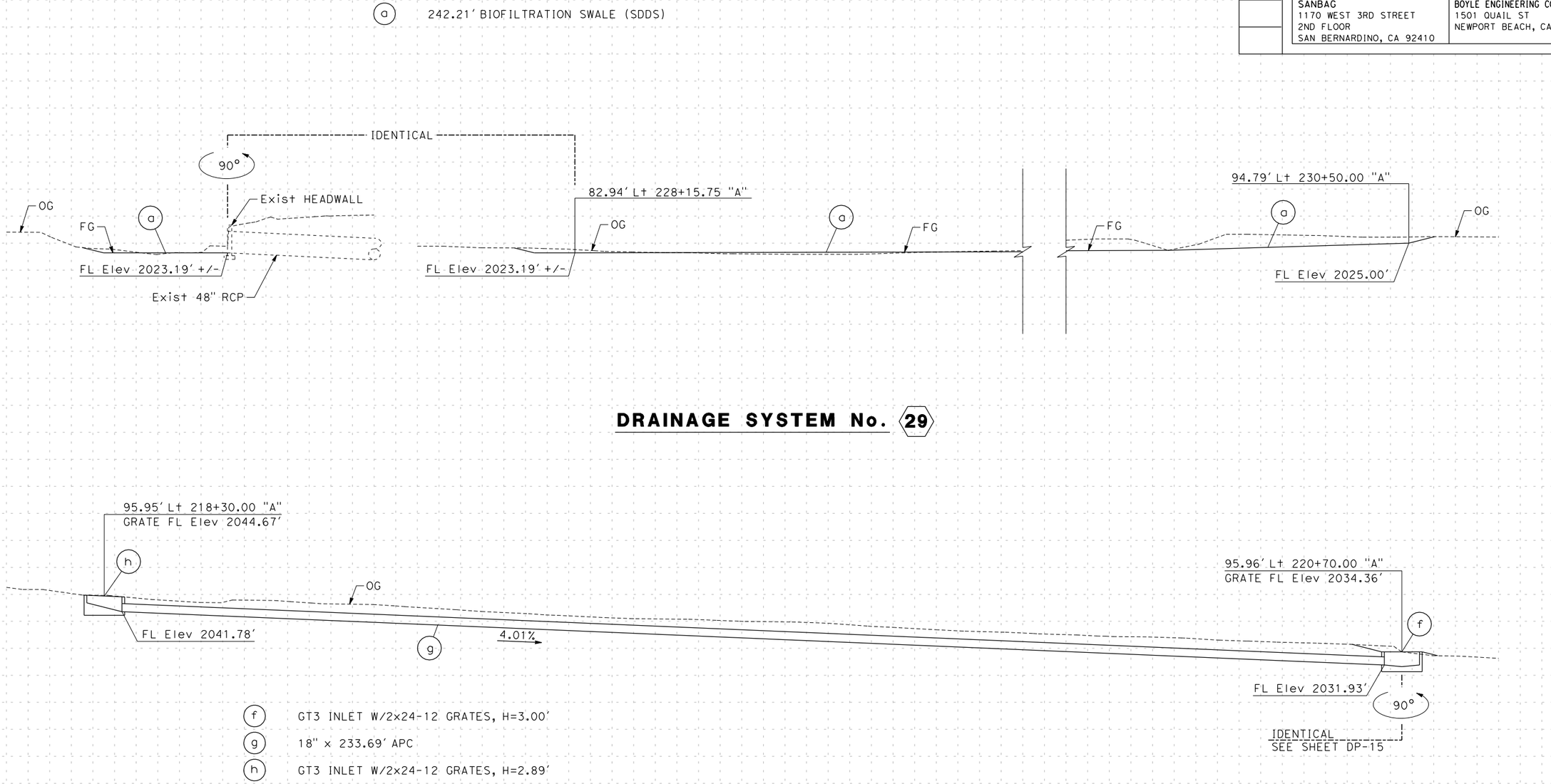

DRAINAGE PROFILE

SCALE Horiz 1"=10'
Vert 1"=10'

DP-16

REVISED BY	DATE REVISED
GREG KEPPLER	GLENN YAMANAKA

CALCULATED-DESIGNED BY	CHECKED BY

CONSULTANT FUNCTIONAL SUPERVISOR: ED KOUZI

STATE OF CALIFORNIA - DEPARTMENT OF TRANSPORTATION

Caltrans

Station	
m^3 Exc	
m^3 Emb	

LAST REVISION 11-25-08 DATE PLOTTED => 6/30/2009 TIME PLOTTED => 5:34:42 PM

6/30/2009 5:34:42 PM YamanakaG h:\ch2mhill\7044.00\cad\planset\0f150ib16.dgn

BORDER LAST REVISED 05/28/2008

RELATIVE BORDER SCALE IS IN INCHES 0 1 2 3

USERNAME => YamanakaG
DGN FILE => ...\0f150ib16.dgn

CU 08220

EA 0F1500

Dist	COUNTY	ROUTE	POST MILES TOTAL PROJECT	SHEET No.	TOTAL SHEETS
8	SBd	10	33.3/R36.9	XXX	XXX

REGISTERED CIVIL ENGINEER DATE

PLANS APPROVAL DATE

REGISTERED PROFESSIONAL ENGINEER GERARD F. DALZIEL No. 36333 Exp 6/30/10 CIVIL STATE OF CALIFORNIA

THE STATE OF CALIFORNIA OR ITS OFFICERS OR AGENTS SHALL NOT BE RESPONSIBLE FOR THE ACCURACY OR COMPLETENESS OF ELECTRONIC COPIES OF THIS PLAN SHEET.

SANBAG
1170 WEST 3RD STREET
2ND FLOOR
SAN BERNARDINO, CA 92410

AECOM
999 W. TOWN & COUNTRY RD
ORANGE, CA 92868

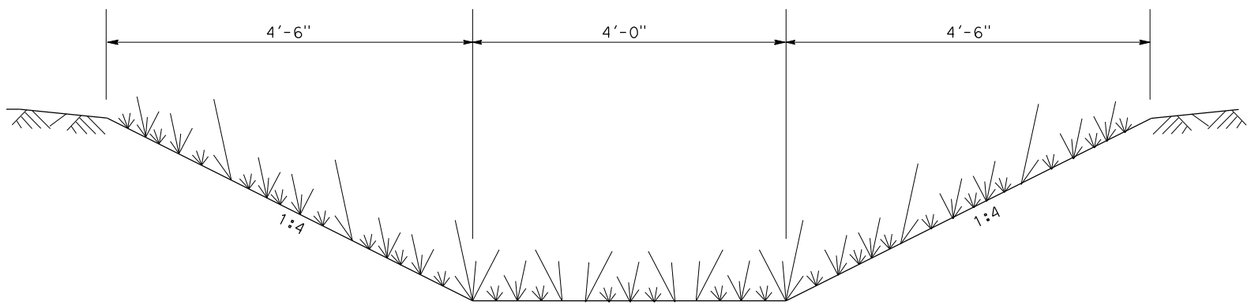

BIOFILTRATION SWALE

1 e 21 c 29 a

BIOFILTRATION SWALE		BEGIN			END			
SYSTEM	UNIT	OFFSET	STATION	LINE	OFFSET	STATION	LINE	LENGTH
1	e	154.49' Lt	54+64.20	"A"	84.64' Lt	60+65.00	"A"	592.09'
21	c	90.00' Lt	166+06.36	"A"	78.50' Lt	168+65.42	"A"	266.11'
29	a	82.94' Lt	228+15.76	"A"	94.79' Lt	230+50.00	"A"	242.21'

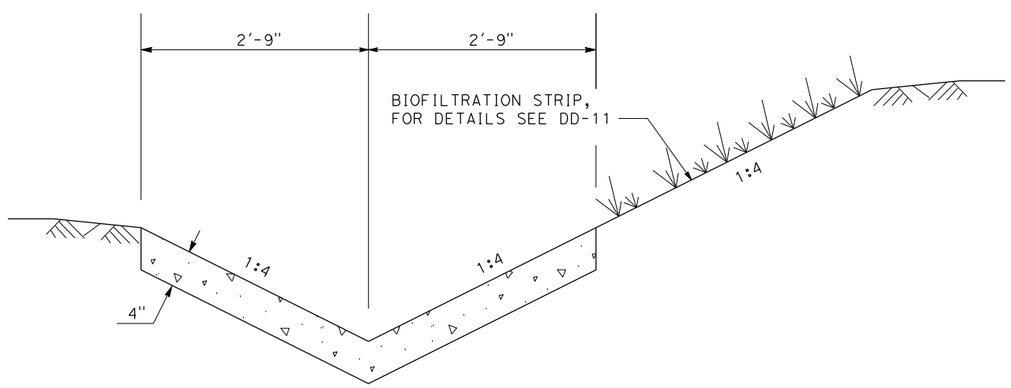

CONCRETE CHANNEL

24 e

CONCRETE CHANNEL		BEGIN			END			
SYSTEM	UNIT	OFFSET	STATION	LINE	OFFSET	STATION	LINE	LENGTH
24	e	86.06' Lt	178+94.21	"A"	87.23' Lt	182+35.34	"A"	337.63'

DRAINAGE DETAILS

NO SCALE

DD-1

LAST REVISION 11-25-08 | DATE PLOTTED => 6/30/2009 TIME PLOTTED => 5:34:42 PM

STATE OF CALIFORNIA - DEPARTMENT OF TRANSPORTATION

Caltrans

CONSULTANT FUNCTIONAL SUPERVISOR: ED KOUZI

CALCULATED-DESIGNED BY: GREG KEPPLER

CHECKED BY: GLENN YAMANAKA

REVISED BY | DATE REVISED

RELATIVE BORDER SCALE IS IN INCHES 0 1 2 3

USERNAME => YamanakaG
DGN FILE => ...\0f150ic01.dgn

CU 08220 | EA 0F1500

Dist	COUNTY	ROUTE	POST MILES TOTAL PROJECT	SHEET No.	TOTAL SHEETS
8	SBd	10	33.3/R36.9	XXX	XXX

REGISTERED CIVIL ENGINEER DATE

PLANS APPROVAL DATE

REGISTERED PROFESSIONAL ENGINEER GERARD F. DALZIEL No. 36333 Exp 6/30/10 CIVIL STATE OF CALIFORNIA

THE STATE OF CALIFORNIA OR ITS OFFICERS OR AGENTS SHALL NOT BE RESPONSIBLE FOR THE ACCURACY OR COMPLETENESS OF ELECTRONIC COPIES OF THIS PLAN SHEET.

SANBAG
1170 WEST 3RD STREET
2ND FLOOR
SAN BERNARDINO, CA 92410

AECOM
999 W. TOWN & COUNTRY RD
ORANGE, CA 92868

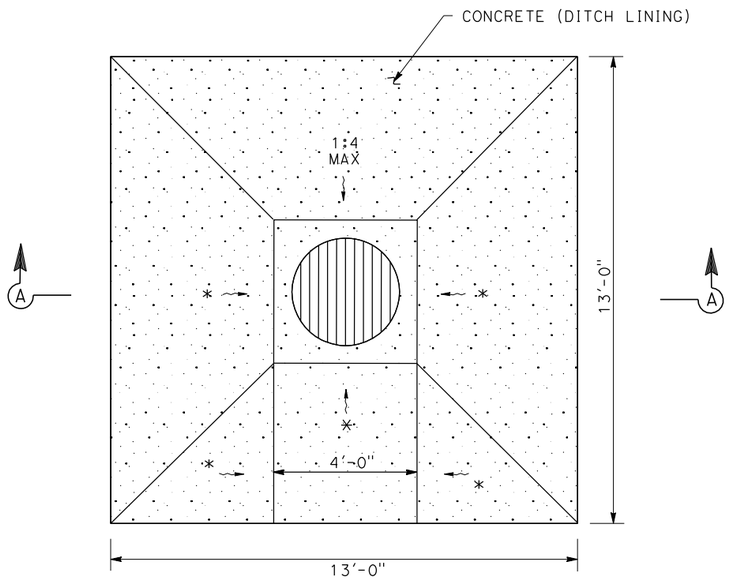

PLAN

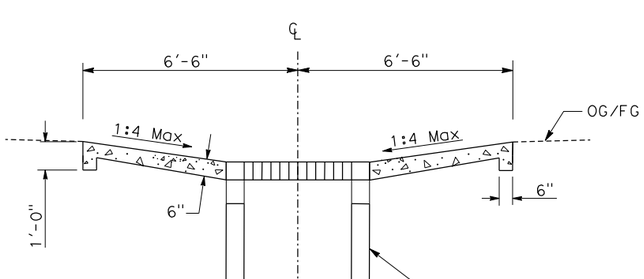

SECTION A-A

CONCRETE APRON - TYPE A

* SLOPE TO MATCH BIOFILTRATION SWALE

1 d 24 u

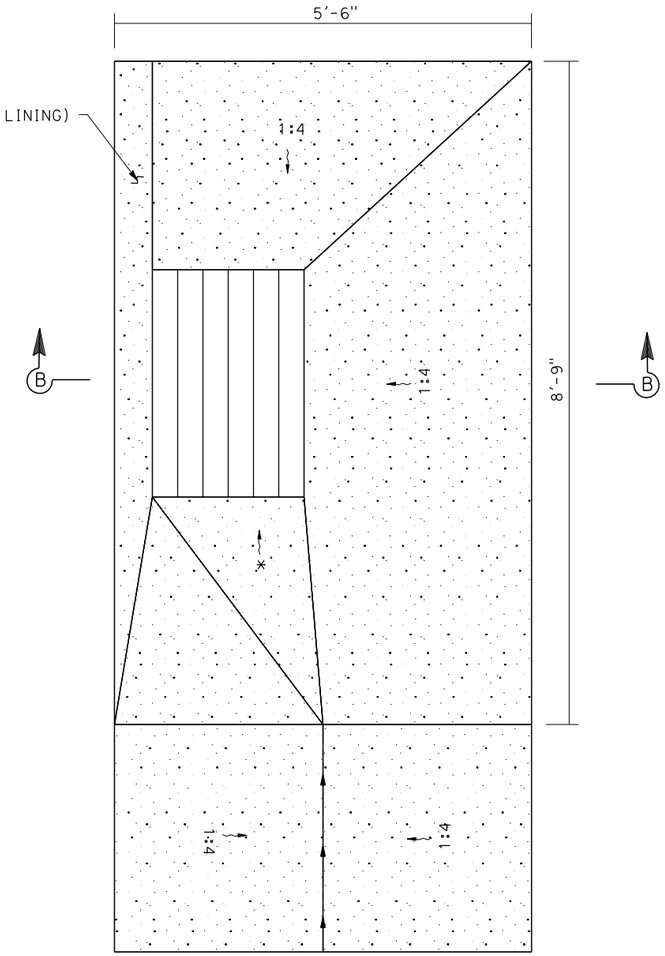

PLAN

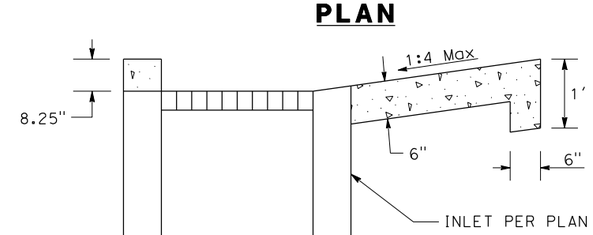

SECTION B-B

CONCRETE APRON - TYPE B

* SLOPE TO MATCH BIOFILTRATION SWALE

24 d

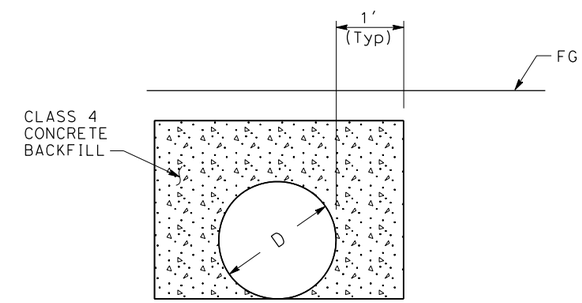

CLASS 4 CONCRETE BACKFILL

NOTE:

REFER TO PIPE PROFILE FOR ACTUAL DEPTH OF PIPE

15 c e g i l n 17 a 18 a

19 f g 22 a 23 a 28 b

DRAINAGE DETAILS

NO SCALE

DD-2

REVISED BY	DATE REVISED
GREG KEPPLER	GLENN YAMANAKA
CALCULATED-DESIGNED BY	CHECKED BY
CONSULTANT FUNCTIONAL SUPERVISOR	ED KOUZI

STATE OF CALIFORNIA - DEPARTMENT OF TRANSPORTATION

Caltrans

LAST REVISION 11-25-08 DATE PLOTTED => 6/30/2009 TIME PLOTTED => 5:34:43 PM

RELATIVE BORDER SCALE IS IN INCHES 0 1 2 3

USERNAME => YamanakaG
DGN FILE => ...\0f150ic02.dgn

CU 08220 EA 0F1500

Dist	COUNTY	ROUTE	POST MILES TOTAL PROJECT	SHEET No.	TOTAL SHEETS
8	SBd	10	33.3/R36.9	XXX	XXX

REGISTERED CIVIL ENGINEER DATE

PLANS APPROVAL DATE

REGISTERED PROFESSIONAL ENGINEER GERARD F. DALZIEL No. 36333 Exp 6/30/10 CIVIL STATE OF CALIFORNIA

THE STATE OF CALIFORNIA OR ITS OFFICERS OR AGENTS SHALL NOT BE RESPONSIBLE FOR THE ACCURACY OR COMPLETENESS OF ELECTRONIC COPIES OF THIS PLAN SHEET.

SANBAG
1170 WEST 3RD STREET
2ND FLOOR
SAN BERNARDINO, CA 92410

AECOM
999 W. TOWN & COUNTRY RD
ORANGE, CA 92868

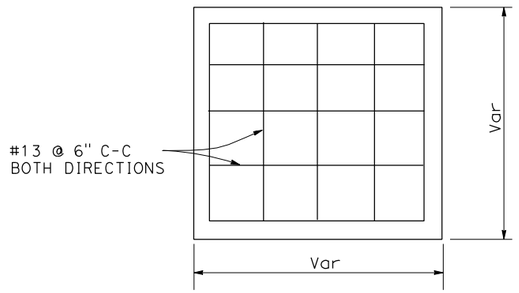

PLAN

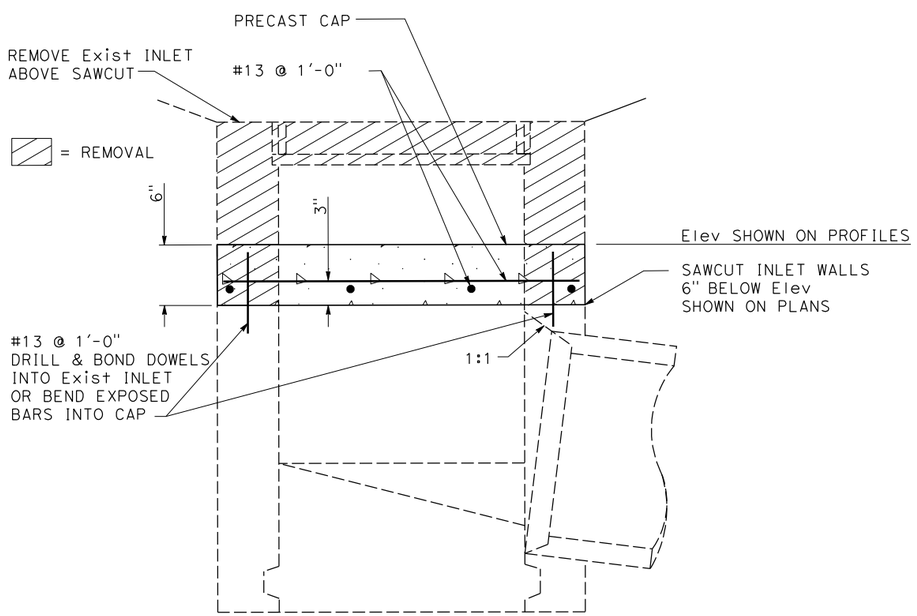

CAP INLET

8 a 9 a 19 a 25 f

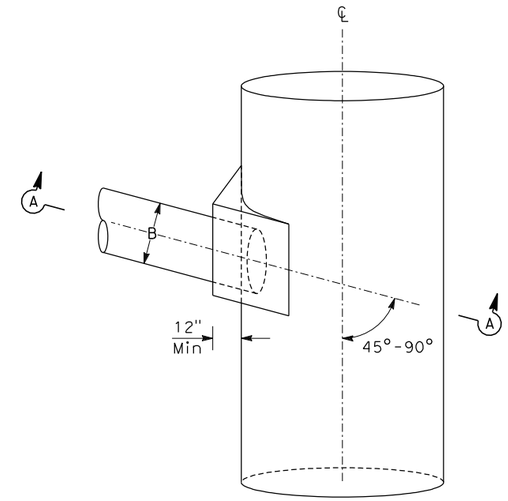

ROTATED VIEW

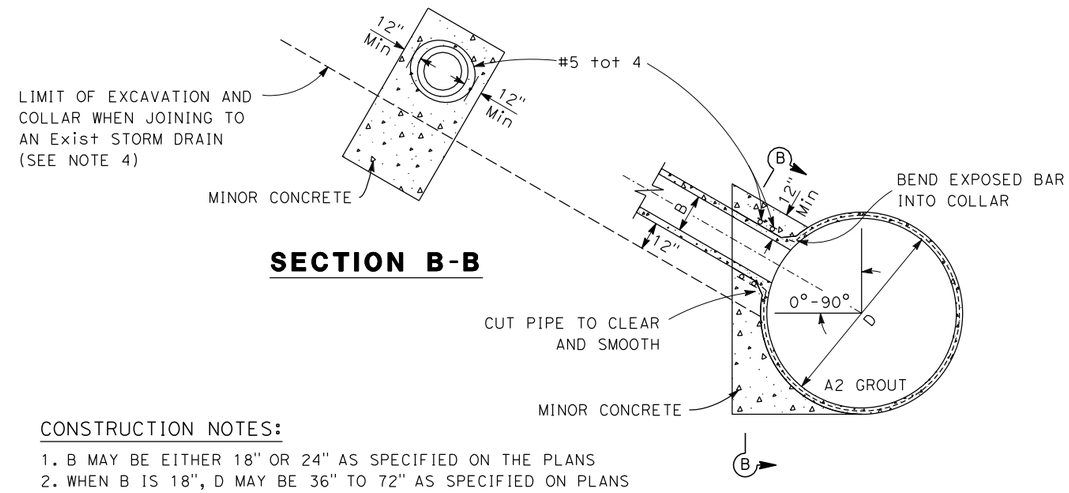

SECTION B-B

SECTION A-A

CONSTRUCTION NOTES:

1. B MAY BE EITHER 18" OR 24" AS SPECIFIED ON THE PLANS
2. WHEN B IS 18", D MAY BE 36" TO 72" AS SPECIFIED ON PLANS
3. WHEN B IS 24", D MAY BE 60" TO 72" AS SPECIFIED ON PLANS
4. FOR EXISTING STORM DRAINS, THE CONCRETE SHALL ONLY EXTEND TO 12" BELOW INLET PIPE

J-1 COLLAR

2 a 12 a 13 a 20 a d

DRAINAGE DETAILS

NO SCALE

DD-3

STATE OF CALIFORNIA - DEPARTMENT OF TRANSPORTATION

Caltrans

CONSULTANT FUNCTIONAL SUPERVISOR: ED KOUZI

CALCULATED-DESIGNED BY: GREG KEPPLER

CHECKED BY: GLENN YAMANAKA

REVISED BY

DATE REVISED

LAST REVISION 11-25-08

DATE PLOTTED => 6/30/2009
TIME PLOTTED => 5:34:43 PM

RELATIVE BORDER SCALE IS IN INCHES 0 1 2 3

USERNAME => YamanakaG
DGN FILE => ...\0f150ic03.dgn

CU 08220

EA 0F1500

Dist	COUNTY	ROUTE	POST MILES TOTAL PROJECT	SHEET No.	TOTAL SHEETS
8	SBd	10	33.3/R36.9	XXX	XXX

REGISTERED CIVIL ENGINEER DATE

PLANS APPROVAL DATE

REGISTERED PROFESSIONAL ENGINEER GERARD F. DALZIEL No. 36333 Exp 6/30/10 CIVIL STATE OF CALIFORNIA

THE STATE OF CALIFORNIA OR ITS OFFICERS OR AGENTS SHALL NOT BE RESPONSIBLE FOR THE ACCURACY OR COMPLETENESS OF ELECTRONIC COPIES OF THIS PLAN SHEET.

SANBAG
1170 WEST 3RD STREET
2ND FLOOR
SAN BERNARDINO, CA 92410

AECOM
999 W. TOWN & COUNTRY RD
ORANGE, CA 92868

D	L	T
12"	12"	4"
18"	12"	5"
24"	12"	6"
30"	18"	7"
36"	18"	9"
42"	18"	9"
48"	18"	10"
54"	18"	10"
60"	21"	11"
66"	21"	11"
72"	24"	12"

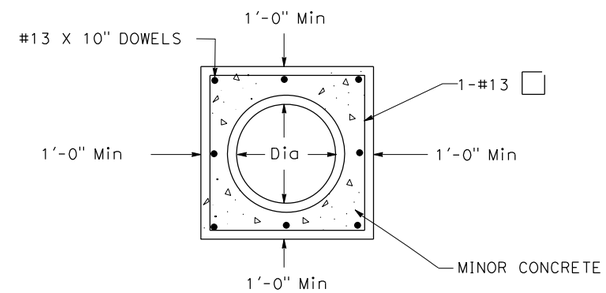

SECTION B-B

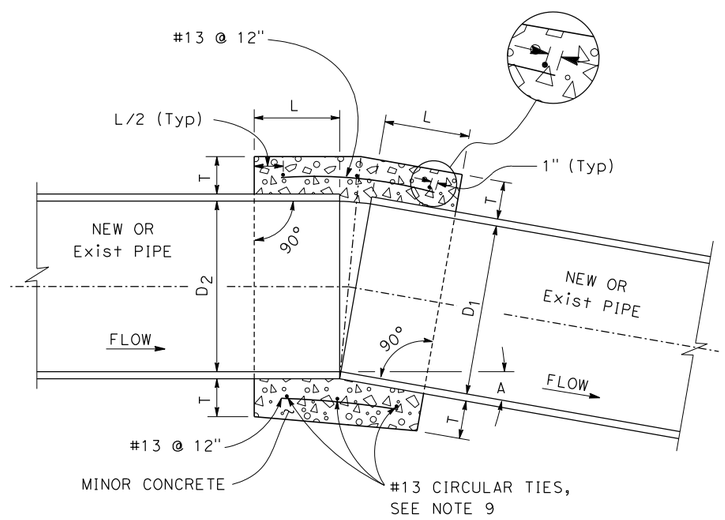

TYPE L-2 COLLAR

14 a 15 a 16 a 17 a d e 18 a

19 d g 21 a 22 a 23 a 24 p 26 g

27 a

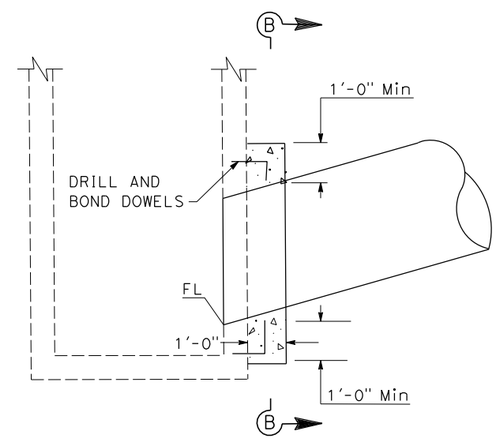

TYPE L-3 COLLAR

19 b e

NOTES:

1. A CONCRETE COLLAR IS REQUIRED WHERE THE CHANGE IN GRADE EXCEEDS 10 PERCENT.
2. FOR CURVE JOINTS
   IF THE EXTREME ENDS OF THE PIPE LEAVE A CLEAR SPACE THAT IS GREATER THAN 1", BUT IS LESS THAN 3"
   A CONCRETE COVER IS REQUIRED IN ACCORDANCE WITH SUBSECTION 306-1.2.4 OF THE SSPWC.
3. CONCRETE COLLAR SHALL NOT BE USED FOR A SIZE CHANGE ON THE MAIN LINE.
4. CONNECTOR PIPES
   A. WHERE PIPES OF DIFFERENT DIAMETERS ARE JOINED WITH A CONCRETE COLLAR. L AND T SHALL BE THOSE OF THE LARGER PIPE. $D=D_1$ OR D_2, WHICHEVER IS GREATER.
   B. WHEN D_1 IS EQUAL TO OR LESS THAN D_2, JOIN INVERTS AND WHEN D_1 IS GREAER THAN D_2, JOIN SOFFITS.
5. FOR PIPE LARGER THAN 70" SPECIAL COLLAR DETAILS ARE REQUIRED.
6. FOR PIPE SIZE NOT LISTED USED NEXT SIZE LARGER.
7. WHERE REINFORCING IS REQUIRED THE DIAMETER OF THE CIRCULAR TIES SHALL BE D + (2X WALL THICKNESS) + T.
8. REINFORCING SHALL BE USED WHERE THE PIPE DIAMETER IS GREATER THAN 525 mm AND ON ALL PIPES WHERE THE SPACES BETWEEN THE EXTREME OUTER ENDS IS 3" OR LARGER.

   CIRCULAR TIES:

PIPE DIAMETER	No. OF CIRCULAR TIES
21" OR LESS	3
24" TO 30"	3
34" TO 56"	4
60" TO 71"	5

   WHERE THE SPACE BETWEEN PIPE ENDS EXCEEDS 3" THE NUMBER OF CIRCULAR TIES SHALL BE INCREASED TO MAINTAIN AN APPROXIMATE SPACING OF 6" O/C.
9. WHERE THE PIPE IS 21" OR LESS IN DIAMETER AN INTERIOR FORM OF UNSEALED SONO-TUBE OR EQUAL SHALL BE USED TO PROVIDE A SMOOTH INTERIOR JOINT. THE PAPER FORM CAN BE LEFT IN PLACE (SEE DETAIL A). WHEN THE PIPE IS 600 mm OR LARGER A REMOVABLE INTERIOR FORM SHALL BE USED OR THE INTERIOR JOINT SHALL BE COMPLETELY FILLED WITH MORTAR AND NEATLY POINTED.

DRAINAGE DETAILS

NO SCALE

DD-4

STATE OF CALIFORNIA - DEPARTMENT OF TRANSPORTATION
Caltrans

CONSULTANT FUNCTIONAL SUPERVISOR: ED KOUZI

CALCULATED-DESIGNED BY: GREG KEPPLER
CHECKED BY: GLENN YAMANAKA

REVISED BY
DATE REVISED

LAST REVISION 11-25-08
DATE PLOTTED => 6/30/2009
TIME PLOTTED => 5:34:44 PM

RELATIVE BORDER SCALE IS IN INCHES 0 1 2 3

USERNAME => YamanakaG
DGN FILE => ...\0f150ic04.dgn

CU 08220

EA 0F1500

Dist	COUNTY	ROUTE	POST MILES TOTAL PROJECT	SHEET No.	TOTAL SHEETS
8	SBd	10	33.3/R36.9	XXX	XXX

REGISTERED CIVIL ENGINEER DATE

PLANS APPROVAL DATE

REGISTERED PROFESSIONAL ENGINEER GERARD F. DALZIEL No. 36333 Exp 6/30/10 CIVIL STATE OF CALIFORNIA

THE STATE OF CALIFORNIA OR ITS OFFICERS OR AGENTS SHALL NOT BE RESPONSIBLE FOR THE ACCURACY OR COMPLETENESS OF ELECTRONIC COPIES OF THIS PLAN SHEET.

SANBAG
1170 WEST 3RD STREET
2ND FLOOR
SAN BERNARDINO, CA 92410

AECOM
999 W. TOWN & COUNTRY RD
ORANGE, CA 92868

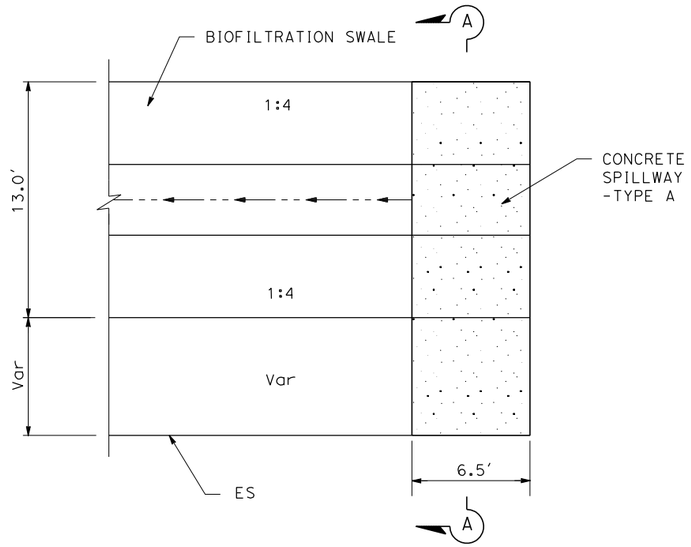

PLAN

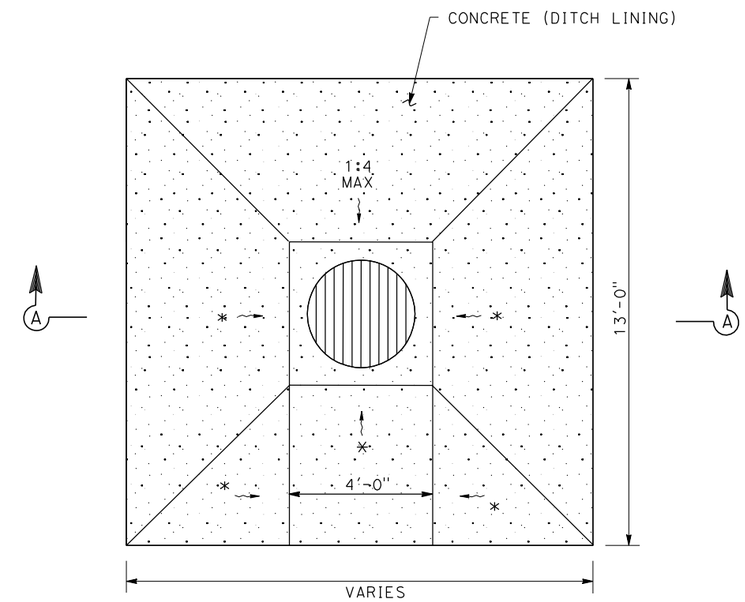

PLAN

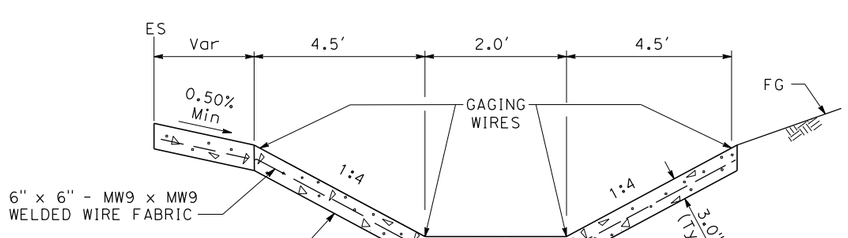

SECTION A-A

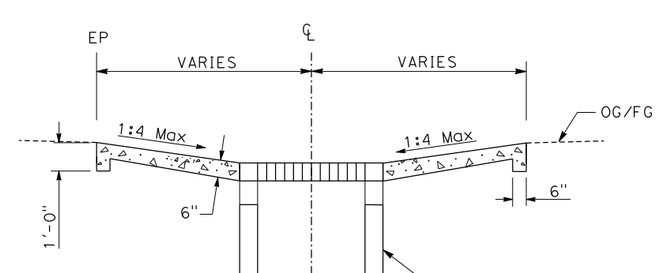

SECTION A-A

CONCRETE SPILLWAY

1 f 21 d

CONCRETE APRON - TYPE C

* SLOPE TO MATCH GRADING

24 u 25 e i

DRAINAGE DETAILS

NO SCALE

DD-5

REVISED BY	DATE REVISED

CALCULATED-DESIGNED BY	GREG KEPPLER
CHECKED BY	GLENN YAMANAKA

CONSULTANT FUNCTIONAL SUPERVISOR	ED KOUZI

STATE OF CALIFORNIA - DEPARTMENT OF TRANSPORTATION

Caltrans

LAST REVISION 11-25-08 | DATE PLOTTED => 6/30/2009 | TIME PLOTTED => 5:34:44 PM

RELATIVE BORDER SCALE IS IN INCHES 0 1 2 3

USERNAME => YamanakaG
DGN FILE => ...\0f150ic05.dgn

CU 08220 | EA 0F1500

Dist	COUNTY	ROUTE	POST MILES TOTAL PROJECT	SHEET No.	TOTAL SHEETS
8	SBd	10	33.3/R36.9	XXX	XXX

REGISTERED CIVIL ENGINEER DATE

PLANS APPROVAL DATE

REGISTERED PROFESSIONAL ENGINEER GERARD F. DALZIEL No. 36333 Exp 6/30/10 CIVIL STATE OF CALIFORNIA

THE STATE OF CALIFORNIA OR ITS OFFICERS OR AGENTS SHALL NOT BE RESPONSIBLE FOR THE ACCURACY OR COMPLETENESS OF ELECTRONIC COPIES OF THIS PLAN SHEET.

SANBAG
1170 WEST 3RD STREET
2ND FLOOR
SAN BERNARDINO, CA 92410

AECOM
999 W. TOWN & COUNTRY RD
ORANGE, CA 92868

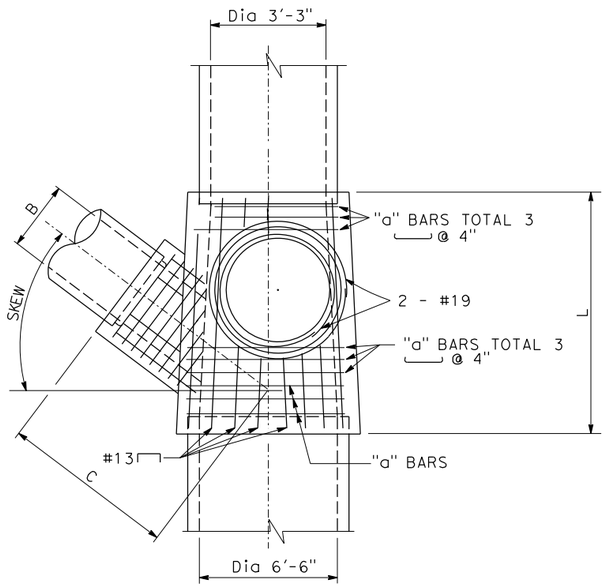

PLAN

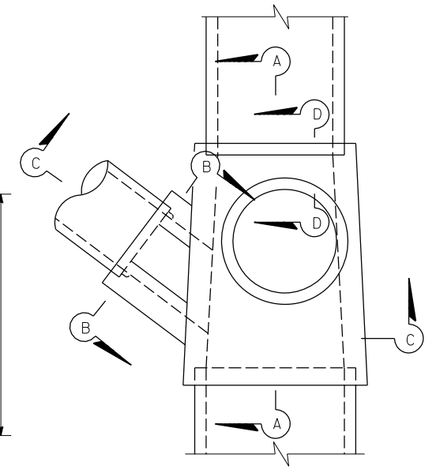

PLAN

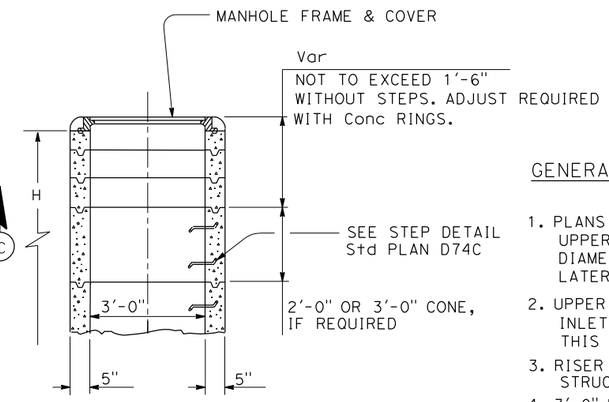

UPPER STRUCTURE TYPE MH

GENERAL NOTES:

1. PLANS SHALL DESIGNATE: INLET AND OUTLET PIPE DIAMETERS UPPER STRUCTURE OR MANHOLE (IF REQUIRED), LATERAL PIPE DIAMETER AND SKEW (IF REQUIRED), C, H, AND H . MANHOLE OR LATERAL MAY BE OMITTED.
2. UPPER STRUCTURE, WHEN REQUIRED, MAY BE ANY DESIGNATED INLET TYPE AS SHOWN ON STANDARD PLAN D72, D73, D74, D75, THIS SHEET OR WITHIN THE DRAINAGE DETAILS.
3. RISER SHALL BE POSITIONED TO EITHER SIDE OF THE STRUCTURE AS SHOWN.
4. 3'-0" RISERS SHALL HAVE A LADDER PER Std PLAN D74C. 1'-6" RISERS SHALL HAVE A SAFETY CAGE PER Std PLAN D93B.
5. THICKNESS OF DECK SHALL VARY AS NECESSARY TO PROVIDE A LEVEL MANHOLE SEAT.
6. REINFORCING STEEL SHALL BE PLACED 2" CLEAR. EXCEPT AS SHOWN.
7. MAXIMUM SKEW OF LATERAL PIPE B IS 45°.
8. LATERAL MAY BE PLACED IN EITHER SIDE WALL.
9. WHERE Dia 1 AND/OR Dia 2 ARE LESS THAN 3'-5", CLEAR DISTANCE BETWEEN SIDES WALLS SHALL BE 3'-5". END WALLS SHALL BE 6" THICK WITH #13 @ 300 PLACED BOTH WAYS.
10. SIDE WALLS SHALL BE FLUSH WITH THE INSIDE OF THE INLET AND OUTLET PIPES WHEN PIPE DIAMETERS ARE 3'-5" OR MORE.
11. L IS 4'-11" Min.
12. WHEN C IS NOT SPECIFIED, BRING THE LATERAL DIRECTLY INTO THE WALL OF THE STRUCTURE.
13. WHEN C IS SPECIFIED, CONTRACTOR MAY, AT HIS OPTION, BRING THE LATERAL DIRECTLY INTO THE WALL FOR USE AS AN INSIDE FORM. A COLLAR CONFORMING WITH THE WALL THICKNESS AND THE REINFORCEMENT AS SHOWN IN SECTION B-B SHALL BE POURED AROUND THE PIPE.
14. WHEN LATERAL IS EXTENDED DIRECTLY INTO THE WALL. IT SHALL BE MITERED AS NECESSARY TO BE FLUSH WITH WALL.
15. "b" BARS SHALL EXTEND A MINIMUM OF 8" ON EITHER SIDE OF THE OPENING.
16. ADJACENT TO EACH SIDE OF THE OPENING, PLACE ADDITIONAL REINFORCEMENT EQUIVALENT TO HALF THE INTERRUPTED MAIN REINFORCEMENT.
17. FOR BURIED JUNCTION STRUCTURES, NEGLECT MANHOLE SEAT AND CONTINUE REINFORCEMENT AND CONCRETE THROUGH THE TOP OF THE STRUCTURE.

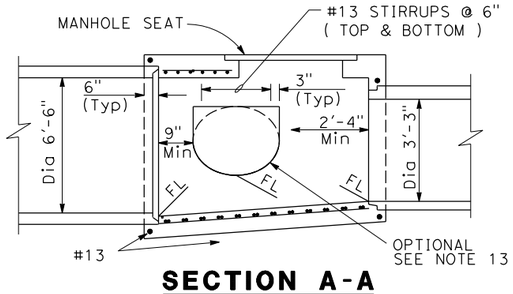

SECTION A-A

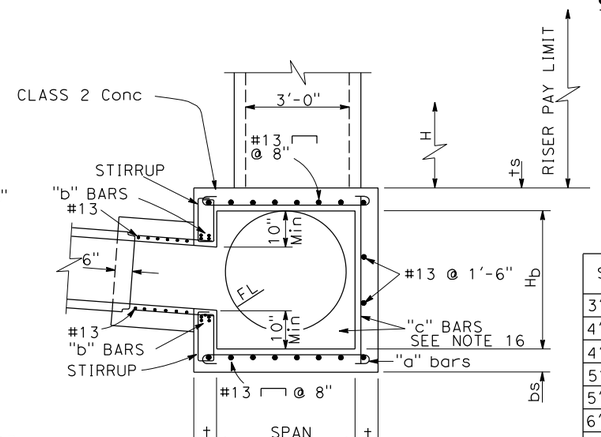

SECTION C-C

SPAN	"a" BARS	TOP AND BOTTOM SLAB THICKNESS (ts, bs) *
3'-6"	#13 @ 4"	8"
4'-0"	#13 @ 4"	8"
4'-6"	#16 @ 5"	8"
5'-0"	#16 @ 4.5"	8"
5'-6"	#19 @ 5.5"	8"
6'-0"	#19 @ 5.5"	9"
6'-6"	#19 @ 4.5"	9"
7'-0"	#19 @ 4"	9.5"

* WHEN FILL OVER JUNCTION STRUCTURE IS 24" OR LESS, ts SHALL BE INCREASED BY 2".

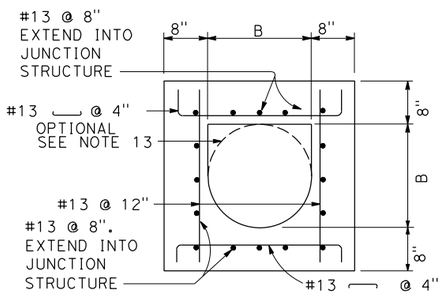

SECTION B-B

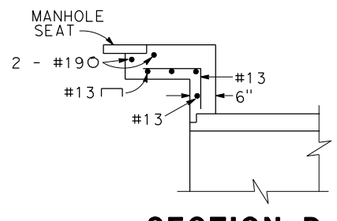

SECTION D-D

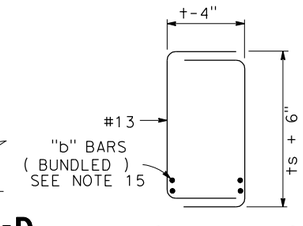

STIRRUPS

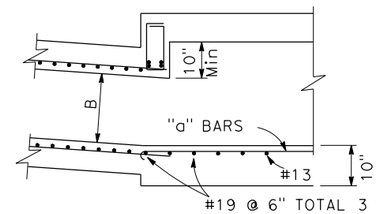

SECTION C-C (OPTIONAL)

MAXIMUM FILL HEIGHT = 8.0'
FOR REINFORCEMENT AND DETAILS NOT SHOWN, SEE SECTION C-C

B	"b" BARS TOP & BOTTOM
2'-6"	#16 TOTAL 4
3'-0"	#16 TOTAL 4
3'-6"	#16 TOTAL 4
4'-0"	#16 TOTAL 4
4'-6"	#16 TOTAL 4
5'-0"	#19 TOTAL 4

Hb	"c" BARS	SIDEWALL THICKNESS (t)
5'-6" or less	#13 @ 4"	8"
6'-6"	#16 @ 4"	8.5"
7'-0"	#16 @ 4"	9"
8'-0"	#19 @ 4"	9.5"

JUNCTION STRUCTURE

1 a | 14 c h | 15 d h m | 24 g k o r | 25 d | 27 b d | 28 a d

DRAINAGE DETAILS

NO SCALE

DD-6

STATE OF CALIFORNIA - DEPARTMENT OF TRANSPORTATION
Caltrans

CONSULTANT FUNCTIONAL SUPERVISOR: ED KOUZI
CALCULATED-DESIGNED BY: GREG KEPPLER
CHECKED BY: GLENN YAMANAKA
REVISED BY
DATE REVISED

LAST REVISION 11-25-08
DATE PLOTTED => 6/30/2009
TIME PLOTTED => 5:34:46 PM

RELATIVE BORDER SCALE IS IN INCHES 0 1 2 3

USERNAME => YamanakaG
DGN FILE => ...\0f150ic06.dgn

CU 08220 | EA 0F1500

Dist	COUNTY	ROUTE	POST MILES TOTAL PROJECT	SHEET No.	TOTAL SHEETS
8	SBd	10	33.3/R36.9	XXX	XXX

REGISTERED CIVIL ENGINEER DATE

PLANS APPROVAL DATE

REGISTERED PROFESSIONAL ENGINEER GERARD F. DALZIEL No. 36333 Exp 6/30/10 CIVIL STATE OF CALIFORNIA

THE STATE OF CALIFORNIA OR ITS OFFICERS OR AGENTS SHALL NOT BE RESPONSIBLE FOR THE ACCURACY OR COMPLETENESS OF ELECTRONIC COPIES OF THIS PLAN SHEET.

SANBAG
1170 WEST 3RD STREET
2ND FLOOR
SAN BERNARDINO, CA 92410

AECOM
999 W. TOWN & COUNTRY RD
ORANGE, CA 92868

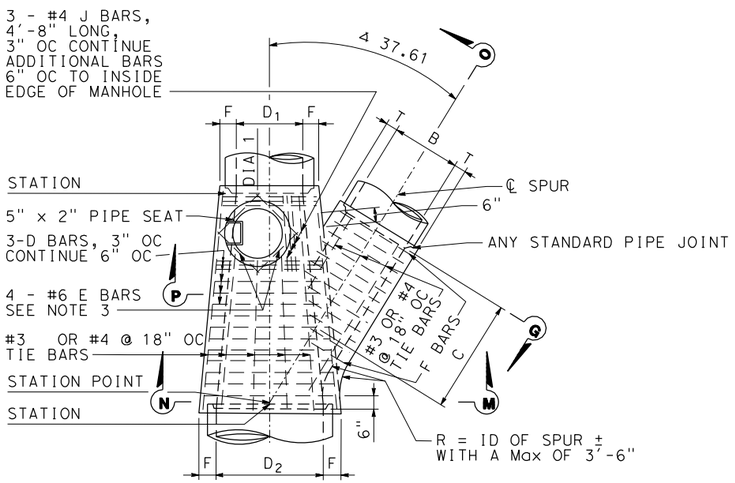

PLAN

(SHAFT NOT SHOWN)

* SEE DD-10 FOR TABLES OF VALUE

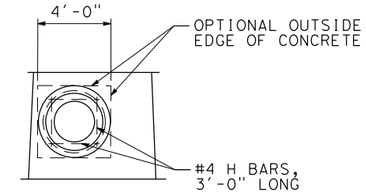

DETAIL "N"

* (RINGS AND COVER NOT SHOWN SEE NOTE 2)

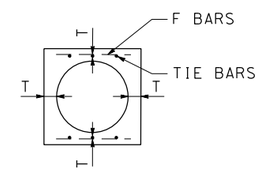

SECTION G - G

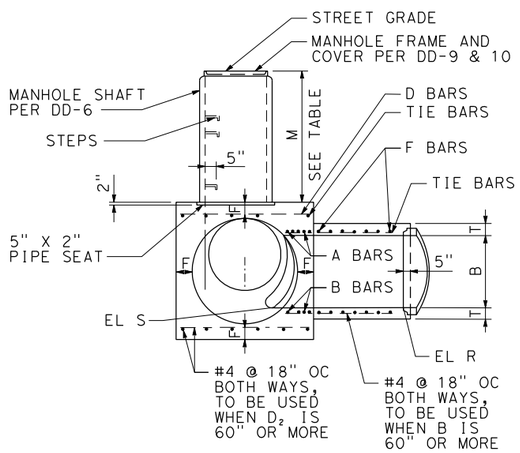

SECTION M - N - O - P

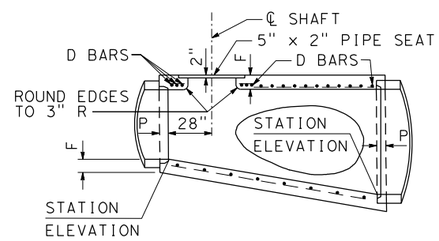

LONGITUDINAL SECTION

NOTES:

1. VALUES FOR A, B, C, D1, D2, ELEVATION R, AND ELEVATION S ARE SHOWN ON THE PLANS. ELEVATION S APPLIES AT INSIDE WALL OF STRUCTURE
2. WHEN DEPTH M FROM STREET GRADE TO THE TOP OF THE BOX IS LESS THAN 2'-10½" FOR PAVED STREETS OR 3'-6" FOR UNPAVED STREETS, CONSTRUCT MONOLITHIC SHAFT PER SECTION C-C AND DETAIL "N". SHAFT FOR ANY DEPTH OF MANHOLE MAY BE CONSTRUCTED PER SECTION C-C. WHEN DIAMETER D1 IS 48" OR LESS, CENTER OF SHAFT MAY BE LOCATED PER NOTE 3.
3. CENTER OF MANHOLE SHAFT SHALL BE LOCATED OVER CENTERLINE OF STORM DRAIN WHEN DIAMATER D1 IS 48" OR LESS, IN WHICH CASE PLACE E BARS SYMMETRICALLY AROUND SHAFT AT 45° WITH CENTERLINE.
4. LENGTH OF MANHOLE MAY BE INCREASED AT OPTION TO MEET PIPE ENDS, BUT ANY CHANGE IN LOCATION OF SPUR MUST BE APPROVED BY THE ENGINEER.
5. P SHALL BE 5" FOR D2 = 69" OR LESS AND 8" FOR D2 OVER 96".
6. REINFORCEMENT SHALL CONFORM TO ASTM A615M, GRADE 300 (ASTM A615, GRADE 40), AND SHALL TERMINATE 1½" CLEAR FO CONCRETE SURFACES UNLESS OTHERWISE SHOWN.
7. FLOOR OF MANHOLE SHALL BE STEEL TROWLED TO SPRING LINE.
8. BODY OF MANHOLE SHALL BE POURED IN ONE CONTINUOUS OPERATION EXCEPT THAT A CONSTRUCTION JOINT WITH A LOGITUDINAL KEYWAY MAY BE PLACED AT SPRING LINE.
9. THICKNESS OF THE DECK SHALL VARY WHEN NECESSARY TO PROVIDE A LEVEL SEAT BUT SHALL NOT BE LESS THAN THE TABULAR VALUES OF F SHOWN ON TABLE, SHEET1.
10. IF LATERALS ENTER ON BOTH SIDES OF MANHOLE, SHAFT WHALL VE LOCATED ON SIDE RECEIVING THE SMALLER LATERAL.
11. STEPS SHALL CONFORM TO SPPWC 635 OR 636. UNLESS OTHERWISE SHOWN, STEPS SHALL BE UNIFORMLY SPACED 14" TO 15" OC. THE LOWEST STEP SHALL NOT BE MORE THAN 24" ABOVE THE INVERT.
12. THE FOLLOWING CRITERIA SHALL BE USED FOR THIS MANHOLE:
    A. THIS STANDARD PLAN IS USED WHEN SPPWC 320 IS INADEQUATE. MAIN LINE = 36" INSIDE DIAMETER OR LARGER.
    B. LATERAL = 12" TO 144" INSIDE DIAMETER; HOWEVER, THE INSIDE DIAMETER SHALL NOT EXCEED THE INSIDE DIAMETER OF THE MAIN LINE.
13. MANHOLE FRAME AND COVER SHALL CONFORM TO SPPWC 630 UNLESS OTHER WISE SHOWN.
14. MANHOLE SHAFT SHALL CONFORM TO SPPWC 324 UNLESS OTHERWISE SHOWN.
15. WHERE A MANHOLE SHAFT - 36" WITHOUT REDUCER IS SPECIFIED REFER TO SPPWC 326.
16. WHERE A PRESSURE MANHOLE SHAFT - 36" WITHOUT REDUCER IS SPECIFIED REFER TO SPPWC 329.
17. SEE SHEET DD-8 FOR FOR TABLES OF VALUES.

MANHOLE 322

24 a

DRAINAGE DETAILS

NO SCALE

DD-7

STATE OF CALIFORNIA - DEPARTMENT OF TRANSPORTATION

Caltrans

CONSULTANT FUNCTIONAL SUPERVISOR: ED KOUZI

CALCULATED-DESIGNED BY: GREG KEPPLER

CHECKED BY: GLENN YAMANAKA

REVISED BY

DATE REVISED

LAST REVISION 11-25-08

DATE PLOTTED => 6/30/2009
TIME PLOTTED => 5:34:46 PM

RELATIVE BORDER SCALE IS IN INCHES 0 1 2 3

USERNAME => YamanakaG
DGN FILE => ...\0f150ic07.dgn

CU 08220

EA 0F1500

Dist	COUNTY	ROUTE	POST MILES TOTAL PROJECT	SHEET No.	TOTAL SHEETS
8	SBd	10	33.3/R36.9	XXX	XXX

REGISTERED CIVIL ENGINEER DATE

PLANS APPROVAL DATE

REGISTERED PROFESSIONAL ENGINEER GERARD F. DALZIEL No. 36333 Exp 6/30/10 CIVIL STATE OF CALIFORNIA

THE STATE OF CALIFORNIA OR ITS OFFICERS OR AGENTS SHALL NOT BE RESPONSIBLE FOR THE ACCURACY OR COMPLETENESS OF ELECTRONIC COPIES OF THIS PLAN SHEET.

SANBAG
1170 WEST 3RD STREET
2ND FLOOR
SAN BERNARDINO, CA 92410

AECOM
999 W. TOWN & COUNTRY RD
ORANGE, CA 92868

TABLE OF BARS SIZES		
D_2 OR B	A & B	D OR F
12" - 39"	#5 @ 3"	#4 @ 6"
42" - 84"	#6 @ 3"	#5 @ 6"
90" - 144"	#7 @ 3"	#6 @ 6"

TABLE OF VALUES FOR M (SEE NOTE 2)				
SECTION	PAVED STREET		UNPAVED STREET	
	Max	Min	Max	Min
M - N - O - P		2'-10½"		3'-6"
C - C	11"	8½"	16"	15"

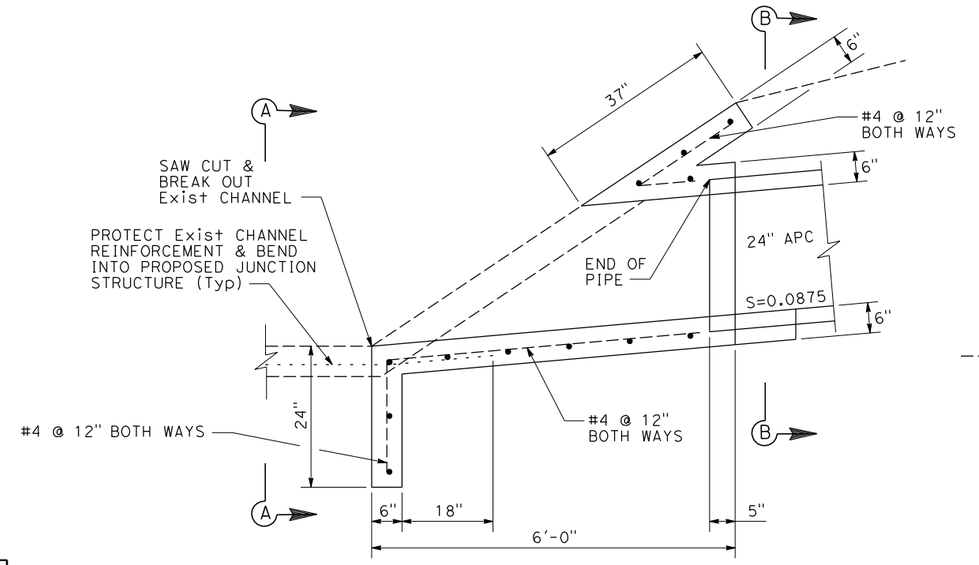

PROFILE

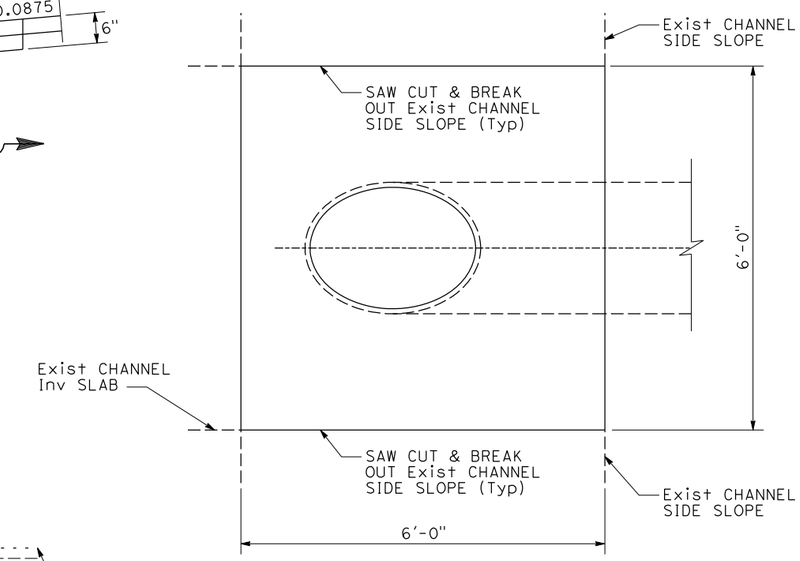

PLAN

TABLE OF VALUES FOR F	
D_2	F
36"	6½"
39"	7"
42"	7½"
45"	7¾"
48"	8"
51"	8½"
54"	9"
57"	9¼"
60"	9½"
63"	10"
66"	10¼"
69"	10¾"
72"	11"
78"	11¾"
84"	12½"
90"	13¼"
96"	14"
102"	15½"
108"	16"
114"	16½"
120"	17"
126"	17"
132"	17½"
138"	17½"
144"	18"

TABLE OF VALUES FOR T	
B	T
12"	4"
15"	4¼"
18"	4½"
21"	5"
24"	5¼"
27"	5½"
30"	6"
33"	6¼"
36"	6½"
39"	7"
42"	7½"
45"	7¾"
48"	8"
51"	8½"
54"	9"
57"	9¼"
60"	9½"
63"	10"
66"	10¼"
69"	10¾"
72"	11"
78"	11¾"
84"	12½"
90"	13¼"
96"	14"
102"	15½"
108"	16"
114"	16½"
120"	17"
126"	17"
132"	17½"
138"	17½"
144"	18"

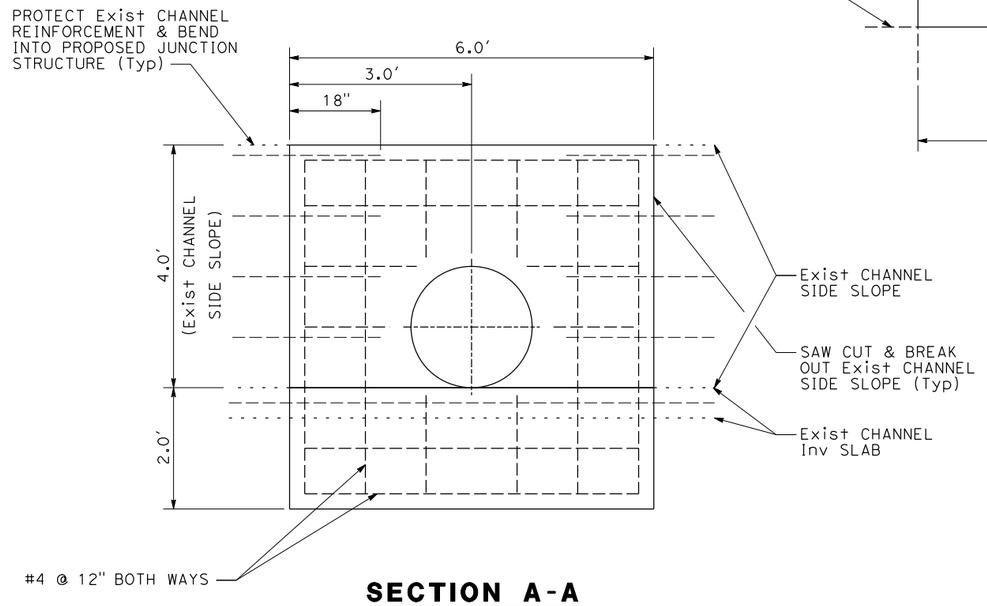

SECTION A-A

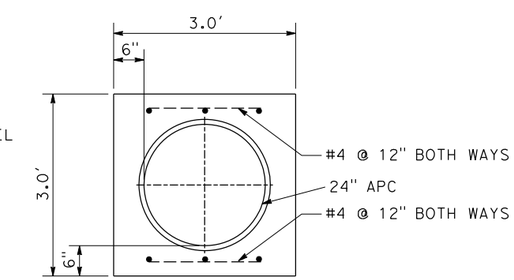

SECTION B-B

CHANNEL CONNECTION

6 a

MANHOLE 322 (Cont)

DRAINAGE DETAILS

NO SCALE

DD-8

STATE OF CALIFORNIA - DEPARTMENT OF TRANSPORTATION

Caltrans

CONSULTANT FUNCTIONAL SUPERVISOR: ED KOUZI

CALCULATED-DESIGNED BY: GREG KEPPLER

CHECKED BY: GLENN YAMANAKA

REVISED BY

DATE REVISED

LAST REVISION 11-25-08

DATE PLOTTED => 6/30/2009
TIME PLOTTED => 5:34:47 PM

RELATIVE BORDER SCALE IS IN INCHES 0 1 2 3

USERNAME => YamanakaG
DGN FILE => ...\0f150ic08.dgn

CU 08220

EA 0F1500

Dist	COUNTY	ROUTE	POST MILES TOTAL PROJECT	SHEET No.	TOTAL SHEETS
8	SBd	10	33.3/R36.9	XXX	XXX

REGISTERED CIVIL ENGINEER DATE

PLANS APPROVAL DATE

REGISTERED PROFESSIONAL ENGINEER GERARD F. DALZIEL No. 36333 Exp. 6/30/10 CIVIL STATE OF CALIFORNIA

THE STATE OF CALIFORNIA OR ITS OFFICERS OR AGENTS SHALL NOT BE RESPONSIBLE FOR THE ACCURACY OR COMPLETENESS OF ELECTRONIC COPIES OF THIS PLAN SHEET.

SANBAG
1170 WEST 3RD STREET
2ND FLOOR
SAN BERNARDINO, CA 92410

AECOM
999 W. TOWN & COUNTRY RD
ORANGE, CA 92868

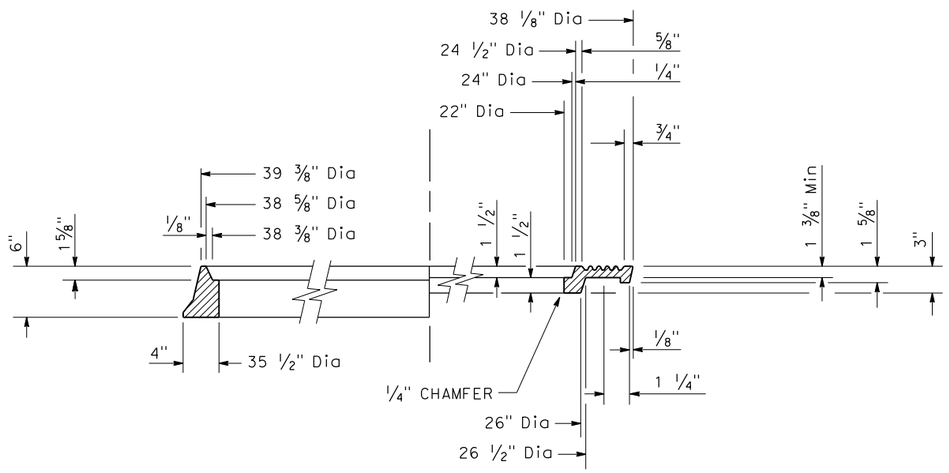

HALF SECTION FRAME AND COVER

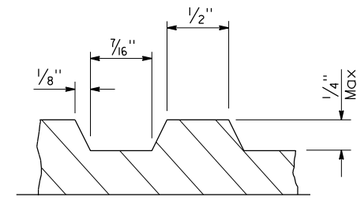

DETAIL A

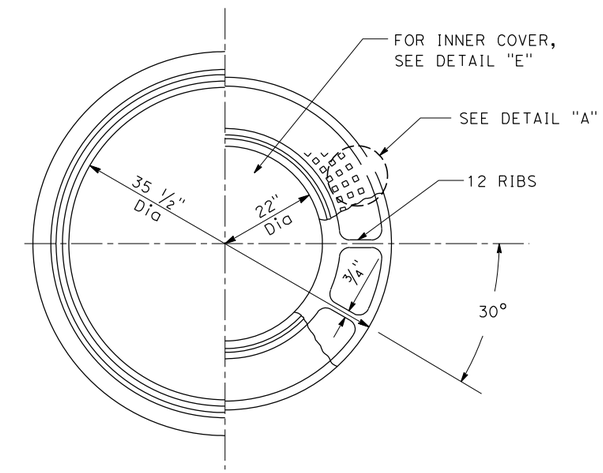

HALF PLAN FRAME AND COVER

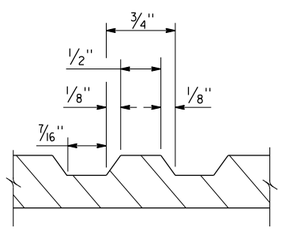

DETAIL B

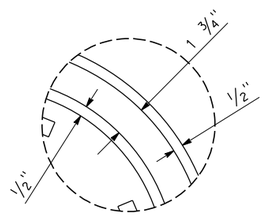

DETAIL C

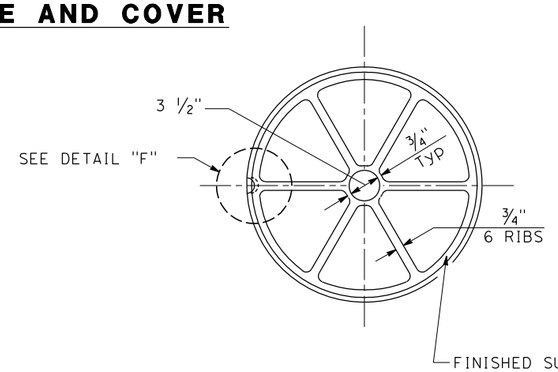

DETAIL E

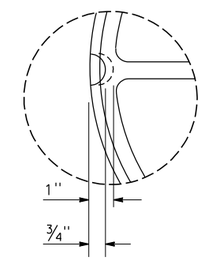

DETAIL F

NOTE:

1. SEE SHEET DD-10 FOR DETAILS ON THE MANHOLE COVER LOCK.

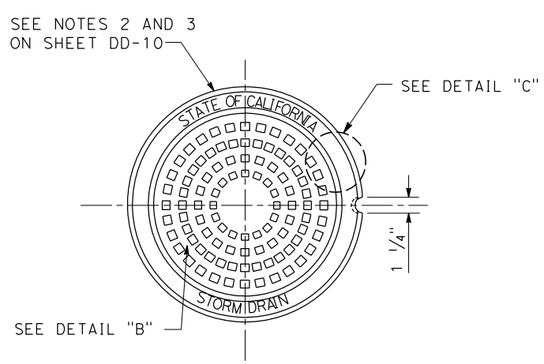

(TYPE A SHOWN)

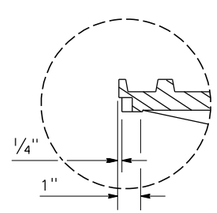

DETAIL D

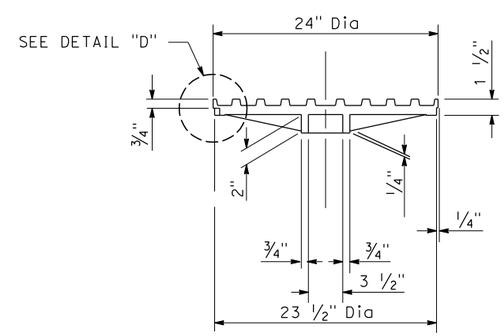

MANHOLE FRAME AND COVER
HEAVY DUTY

1 a 24 a g k o r

DRAINAGE DETAILS
NO SCALE
DD-9

STATE OF CALIFORNIA - DEPARTMENT OF TRANSPORTATION
Caltrans

CONSULTANT FUNCTIONAL SUPERVISOR: ED KOUZI
CALCULATED-DESIGNED BY: GREG KEPPLER
CHECKED BY: GLENN YAMANAKA
REVISED BY
DATE REVISED

LAST REVISION 11-25-08
DATE PLOTTED => 6/30/2009
TIME PLOTTED => 5:34:48 PM

RELATIVE BORDER SCALE IS IN INCHES 0 1 2 3

USERNAME => YamanakaG
DGN FILE => ...\0f150ic09.dgn

CU 08220

EA 0F1500

Dist	COUNTY	ROUTE	POST MILES TOTAL PROJECT	SHEET No.	TOTAL SHEETS
8	SBd	10	33.3/R36.9	XXX	XXX

REGISTERED CIVIL ENGINEER DATE

PLANS APPROVAL DATE

REGISTERED PROFESSIONAL ENGINEER GERARD F. DALZIEL No. 36333 Exp. 6/30/10 CIVIL STATE OF CALIFORNIA

THE STATE OF CALIFORNIA OR ITS OFFICERS OR AGENTS SHALL NOT BE RESPONSIBLE FOR THE ACCURACY OR COMPLETENESS OF ELECTRONIC COPIES OF THIS PLAN SHEET.

SANBAG
1170 WEST 3RD STREET
2ND FLOOR
SAN BERNARDINO, CA 92410

AECOM
999 W. TOWN & COUNTRY RD
ORANGE, CA 92868

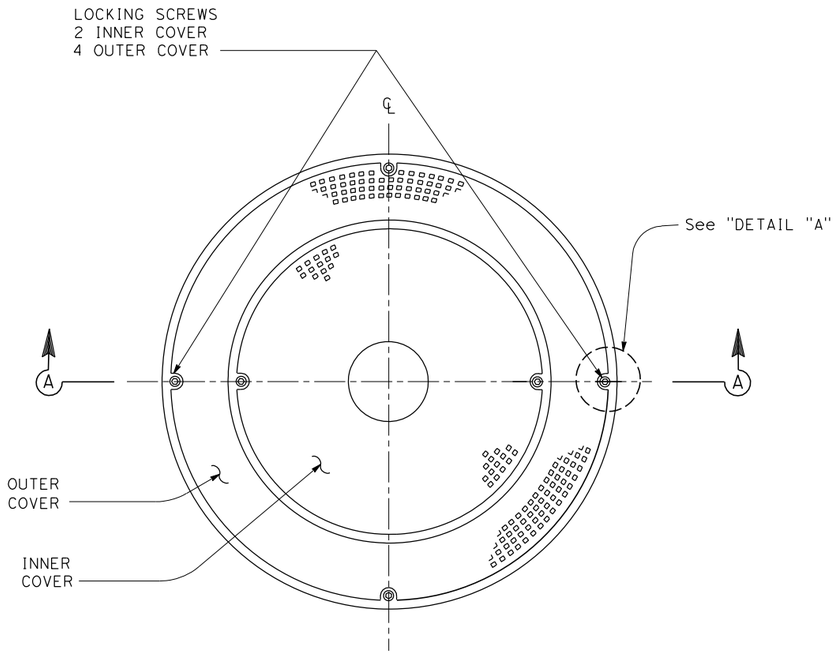

PLAN

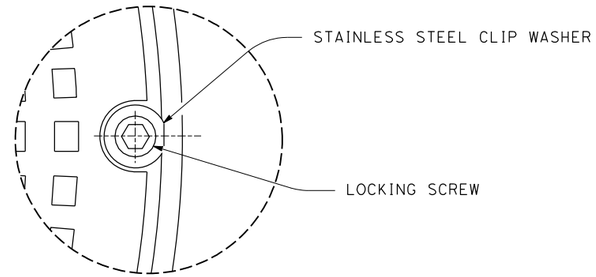

DETAIL A

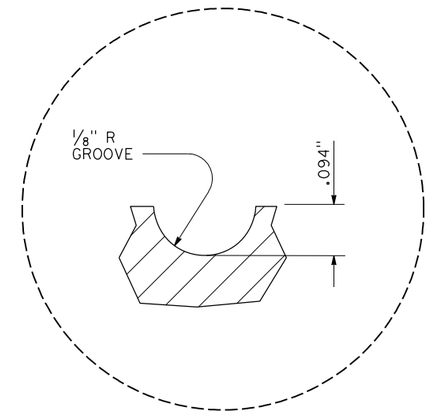

DETAIL C

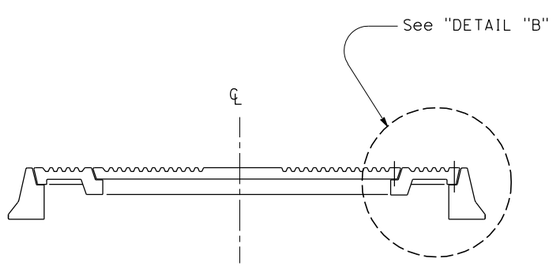

SECTION A-A

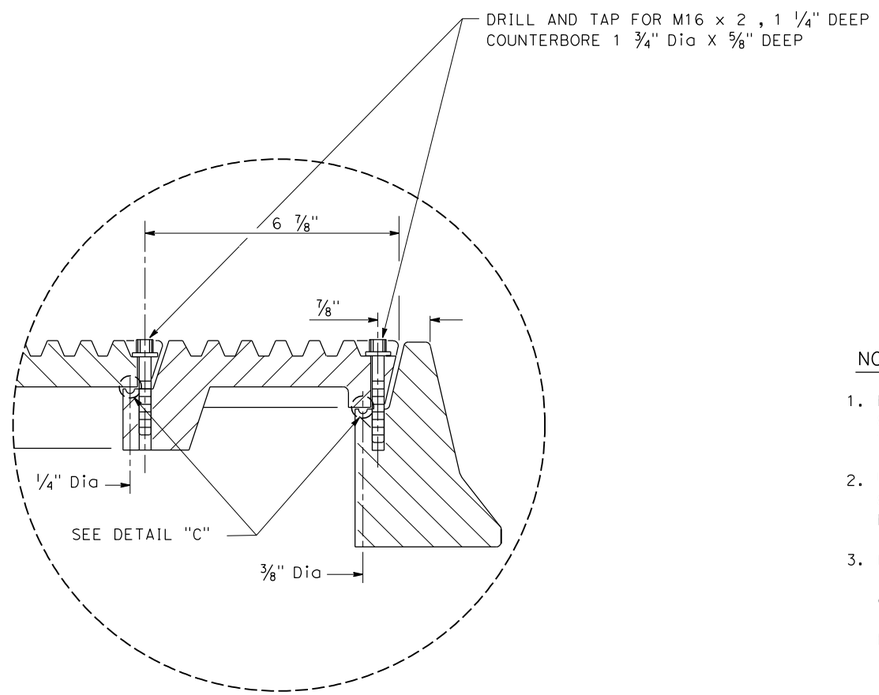

DETAIL B

NOTES:

1. M16 x 2 , 316 STAINLESS STEEL SOCKET HEAD CAP SCREW AND 1 1/2" OD X 0.687" ID X .09" THICK 316 STAINLESS STEEL WASHER.
2. 1/4" NEOPRENE O-RING GASKET SHALL BE GLUED INTO MACHINED GROOVE. GLUE SHALL MEET THE REQUIREMENTS OFMIL-M-81288
3. BOLTDOWN PATTERNS:
   a. BETWEEN INNER AND OUTER COVERS INSTALL TWO BOLTS AT 180°
   b. BETWEEN OUTER COVER AND FRAME INSTALL FOUR BOLTS AT 90°.

MANHOLE FRAME & COVER (Cont)

DRAINAGE DETAILS

NO SCALE

DD-10

REVISED BY	DATE REVISED
GREG KEPPLER	GLENN YAMANAKA
CALCULATED-DESIGNED BY	CHECKED BY
CONSULTANT FUNCTIONAL SUPERVISOR	ED KOUZI

STATE OF CALIFORNIA - DEPARTMENT OF TRANSPORTATION

Caltrans

LAST REVISION 11-25-08 | DATE PLOTTED => 6/30/2009 TIME PLOTTED => 5:34:48 PM

RELATIVE BORDER SCALE IS IN INCHES 0 1 2 3

USERNAME => YamanakaG
DGN FILE => ...\0f150ic10.dgn

CU 08220 | EA 0F1500

Dist	COUNTY	ROUTE	POST MILES TOTAL PROJECT	SHEET No.	TOTAL SHEETS
8	SBd	10	33.3/R36.9	XXX	XXX

REGISTERED CIVIL ENGINEER DATE

PLANS APPROVAL DATE

REGISTERED PROFESSIONAL ENGINEER GERARD F. DALZIEL No. 36333 Exp 6/30/10 CIVIL STATE OF CALIFORNIA

THE STATE OF CALIFORNIA OR ITS OFFICERS OR AGENTS SHALL NOT BE RESPONSIBLE FOR THE ACCURACY OR COMPLETENESS OF ELECTRONIC COPIES OF THIS PLAN SHEET.

SANBAG
1170 WEST 3RD STREET
2ND FLOOR
SAN BERNARDINO, CA 92410

AECOM
999 W. TOWN & COUNTRY RD
ORANGE, CA 92868

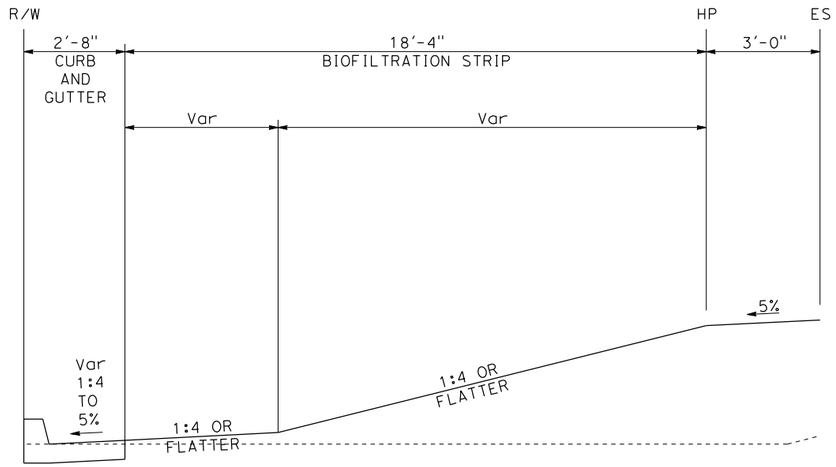

CURB AND GUTTER

24 v

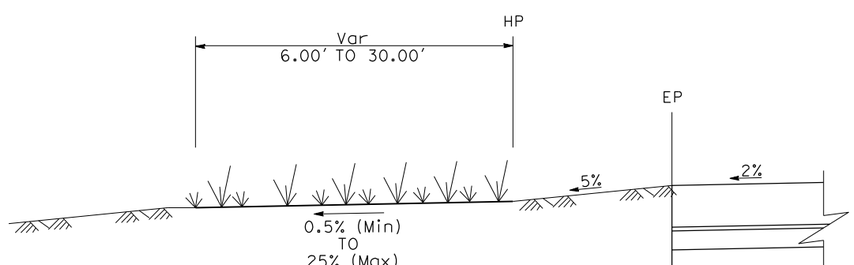

BIOFILTRATION STRIP	BEGIN		END		AREA
No.	STATION	LINE	STATION	LINE	(Ft^2)
1	180+00.00	"A"	189+10.00	"A"	13,283
2	214+89.00	"A"	228+08.00	"A"	24,729

NOTE: SEED MIX PER EROSION CONTROL PLANS

BIOFILTRATION STRIP

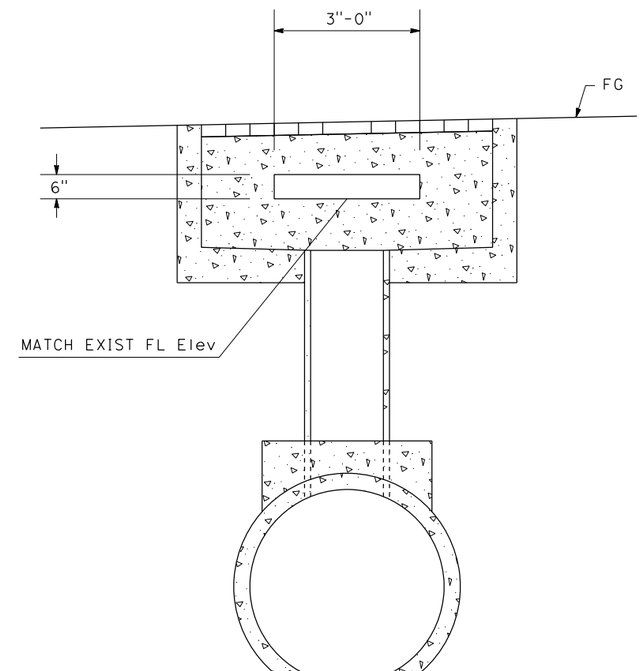

SIDE OPENING

2 b

DRAINAGE DETAILS

NO SCALE

DD-11

STATE OF CALIFORNIA - DEPARTMENT OF TRANSPORTATION

Caltrans

CONSULTANT FUNCTIONAL SUPERVISOR: ED KOUZI

CALCULATED-DESIGNED BY: GREG KEPPLER

CHECKED BY: GLENN YAMANAKA

REVISED BY | DATE REVISED

LAST REVISION 11-25-08 | DATE PLOTTED => 6/30/2009 | TIME PLOTTED => 5:34:48 PM

RELATIVE BORDER SCALE IS IN INCHES 0 1 2 3

USERNAME => YamanakaG
DGN FILE => ...\0f150ic11.dgn

CU 08220 | EA 0F1500

Dist	COUNTY	ROUTE	POST MILES TOTAL PROJECT	SHEET No.	TOTAL SHEETS
8	SBd	10	33.3/R36.9	XXX	XXX

REGISTERED CIVIL ENGINEER DATE

PLANS APPROVAL DATE

REGISTERED PROFESSIONAL ENGINEER GERARD F. DALZIEL No. 36333 Exp 6/30/10 CIVIL STATE OF CALIFORNIA

THE STATE OF CALIFORNIA OR ITS OFFICERS OR AGENTS SHALL NOT BE RESPONSIBLE FOR THE ACCURACY OR COMPLETENESS OF ELECTRONIC COPIES OF THIS PLAN SHEET.

SANBAG
1170 WEST 3RD STREET
2ND FLOOR
SAN BERNARDINO, CA 92410

AECOM
999 W. TOWN & COUNTRY RD
ORANGE, CA 92868

ABBREVIATIONS
(N) NOT A PAY ITEM
S STANDARD
D DOWNDRAIN

DRAINAGE PLAN SHEET No.	DRAINAGE SYSTEM No.	DRAINAGE UNIT No.	MODIFICATIONS: REMOVE INLET	REMOVE HEADWALL	REMOVE CULVERT	ABANDON INLET	CAP INLET	REMOVE CONCRETE (CHANNEL)	CULVERTS: (N) PIPE JOINT CLASSIFICATION	18" APC	24" APC	36" APC	42" APC	18" AP RISER	36" AP RISER	CLASS 4 CONCRETE (BACKFILL)	(N) MAXIMUM HEIGHT COVER	STRUCTURES: (N) STRUCTURE HEIGHT	(N) G1 INLET	(N) G2 INLET	(N) GCP INLET	(N) GT3 INLET	(N) JUNCTION STRUCTURE	(N) "L" HEADWALL	(N) MANHOLE 322	GRATED LINE DRAIN	(N) GRATE TYPE 24-12	GRATE TYPE 36R	(N) MANHOLE FRAME AND COVER	MISCELLANEOUS IRON AND STEEL	MINOR CONCRETE (MINOR STRUCTURE)	MINOR CONCRETE (CURB AND GUTTER)	CLASS 2 CONCRETE (MINOR STRUCTURE)	DITCH EXCAVATION	CONCRETE (DITCH LINING)	DESCRIPTION	STATION	SYSTEM No.	UNIT No.
			EA	EA	Ft	EA	EA	Ft	-	Ft	Ft	Ft	Ft	Ft	Ft	Yd3	Ft	Ft	EA	EA	EA	EA	EA	EA	EA	Ft	EA	EA	EA	lbs	Yd3	Yd3	Yd3	Yd3	Yd3				
D-1	1	a																5.40					1						1	235			3.38			JUNCTION STRUCTURE W/MH F & C	156.77′ Lt 54+43.22 "A"	1	a
D-1	1	b							S		9.50						3.7																			24" APC	"A"	1	b
D-1	1	c													4.71			4.21			1							1		236	0.42					GCP INLET W/36R GRATE	155.93′ Lt 54+57.38 "A"	1	c
D-1	1	d																																	3.5	CONCRETE APRON - TYPE A	155.93′ Lt 54+57.38 "A"	1	d
D-1	1	e																																209.6		BIOFILTRATION SWALE	"A"	1	e
D-1	1	f																																	1.0	CONCRETE SPILLWAY	84.04′ Lt 60+71.57 "A"	1	f
D-1	2	a												5.00																	0.43					18" AP RISER W/J-1 COLLAR, SAFETY CAGE	3.76′ Lt 54+51.14 "A"	2	a
D-1	2	b																2.64				1					2			652	1.73					GT3 INLET W/2x24-12 GRATES	3.76′ Lt 54+51.14 "A"	2	b
D-1	2	c			3.00																															REMOVE CULVERT (12" CSP RISER)	54+51.14 "A"	2	c
D-1	2	d	1																																	REMOVE INLET	54+51.14 "A"	2	d
D-1	2	e	1																																	REMOVE INLET	3.76′ Lt 54+51.14 "A"	2	e
D-2	3	a				1																														ABANDON INLET	1.72′ Lt 62+58.82 "A"	3	a
D-2	4	a																							45											GLD	73.85′ Lt 72+15.20 "A"	4	a
D-2	4	b				1																														ABANDON INLET	1.67′ Lt 72+14.94 "A"	4	b
D-3	5	a				1																														ABANDON INLET	1.77′ Lt 80+90.00 "A"	5	a
D-4	6	a							S		105.34						9.6														1.19					24" APC W/CHANNEL CONNECTION	"A"	6	a
D-4	6	b																5.38		1							1			326	1.92					G2 INLET W/24-12 GRATE	1.82′ Lt 89+55.51 "A"	6	b
D-4	6	c																							40											GLD	1.82′ Lt 89+55.51 "A"	6	c
D-4	6	d							S		293.58						2.7																			24" APC	"A"	6	d
D-4	6	e																5.30		1							1			326	1.90					G2 INLET W/24-12 GRATE	1.70′ Lt 92+51.86 "A"	6	e
D-4	6	f																							40											GLD	1.70′ Lt 92+51.86 "A"	6	f
D-4	6	g							S		245.36						3.2																			24" APC	"A"	6	g
D-4	6	h																5.29		1							1			326	1.89					G2 INLET W/24-12 GRATE	1.81′ Lt 95+00.00 "A"	6	h
D-4	6	i																							40											GLD	1.81′ Lt 95+00.00 "A"	6	i
D-4	6	j							S		285.56						3.2																			24" APC	"A"	6	j
D-4	6	k																5.28		1							1			326	1.89					G2 INLET W/24-12 GRATE	1.88′ Lt 97+88.23 "A"	6	k
D-4	6	l																							40											GLD	1.88′ Lt 97+88.23 "A"	6	l
SHEET TOTAL			2	0	3	3	0	0	-	0	940	0	0	5	5	0	-	-	-	-	-	-	-	-	205	-	-	-	2427	12	0	4	210	5	SHEET TOTAL			

APC ALLOWABLE PIPE MATERIAL & PROTECTION

TYPE S HDPE (SMOOTH INTERIOR)			RIBBED PROFILE WALL HDPE			RIBBED DRAIN PIPE PVC			CORRUGATED STEEL PIPE			REINFORCED CONCRETE PIPE		
THICKNESS	Bit Ctd	Max COVER	THICKNESS	Bit Ctd	Max COVER	THICKNESS	Bit Ctd	Max COVER	THICKNESS	Bit Ctd	Max COVER	THICKNESS	Bit Ctd	Max COVER
0.05"	YES	10′	0.05"	NO	23′	0.12"	NO	26′	0.17"	YES	A62F	PER Std Pln A62D		

UNDER TRAVELED WAY: USE RCP ONLY. ALL RISERS W/ACCESS: USE CSP OR RCP. ALL DOWNDRAINS: USE ALL TYPES EXCEPT RCP.

DRAINAGE QUANTITIES

DQ-1

REVISED BY	DATE REVISED

GREG KEPPLER — GLENN YAMANAKA

CALCULATED-DESIGNED BY — CHECKED BY

CONSULTANT FUNCTIONAL SUPERVISOR — ED KOUZI

STATE OF CALIFORNIA - DEPARTMENT OF TRANSPORTATION — Caltrans

LAST REVISION 11-25-08 — DATE PLOTTED => 6/30/2009 — TIME PLOTTED => 5:34:49 PM

Dist	COUNTY	ROUTE	POST MILES TOTAL PROJECT	SHEET No.	TOTAL SHEETS
8	SBd	10	33.3/R36.9	XXX	XXX

REGISTERED CIVIL ENGINEER DATE

PLANS APPROVAL DATE

REGISTERED PROFESSIONAL ENGINEER GERARD F. DALZIEL No. 36333 Exp 6/30/10 CIVIL STATE OF CALIFORNIA

THE STATE OF CALIFORNIA OR ITS OFFICERS OR AGENTS SHALL NOT BE RESPONSIBLE FOR THE ACCURACY OR COMPLETENESS OF ELECTRONIC COPIES OF THIS PLAN SHEET.

SANBAG
1170 WEST 3RD STREET
2ND FLOOR
SAN BERNARDINO, CA 92410

AECOM
999 W. TOWN & COUNTRY RD
ORANGE, CA 92868

DRAINAGE PLAN SHEET No.	DRAINAGE SYSTEM No.	DRAINAGE UNIT No.	MODIFICATIONS: REMOVE INLET	REMOVE HEADWALL	REMOVE CULVERT	ABANDON INLET	CAP INLET	REMOVE CONCRETE (CHANNEL)	CULVERTS: PIPE JOINT CLASSIFICATION (N)	18" APC	24" APC	36" APC	42" APC	18" AP RISER	36" AP RISER	CLASS 4 CONCRETE (BACKFILL)	MAXIMUM HEIGHT COVER (N)	STRUCTURES: STRUCTURE HEIGHT (N)	G1 INLET (N)	G2 INLET (N)	GCP INLET (N)	GT3 INLET (N)	JUNCTION STRUCTURE (N)	"L" HEADWALL (N)	MANHOLE 322 (N)	GRATED LINE DRAIN	GRATE TYPE 24-12 (N)	GRATE TYPE 36R (N)	MANHOLE FRAME AND COVER (N)	MISCELLANEOUS IRON AND STEEL	MINOR CONCRETE (MINOR STRUCTURE)	MINOR CONCRETE (CURB AND GUTTER)	CLASS 2 CONCRETE (MINOR STRUCTURE)	DITCH EXCAVATION	CONCRETE (DITCH LINING)	DESCRIPTION	STATION	SYSTEM No.	UNIT No.
			EA	EA	Ft	EA	EA	Ft	-	Ft	Ft	Ft	Ft	Ft	Ft	Yd3	Ft	Ft	EA	EA	EA	EA	EA	EA	EA	Ft	EA	EA	EA	lbs	Yd3	Yd3	Yd3	Yd3	Yd3				
D-5	7	a																4.91		1							1			326	1.80					G2 INLET W/24-12 GRATE	2.90' Lt 100+56.23 "A"	7	a
D-5	7	b																								25										GLD	2.90' Lt 100+56.23 "A"	7	b
D-5	7	c							S		82.98						3.7																			24" APC	"A"	7	c
D-5	7	d																5.74		1							1			326	2.01					G2 INLET W/24-12 GRATE	2.00' Lt 101+48.69 "A"	7	d
D-5	7	e																								45										GLD	2.00' Lt 101+48.69 "A"	7	e
D-5	7	f							S		248.67						3.1																			24" APC	"A"	7	f
D-5	7	g																4.74		1							1			326	1.75					G2 INLET W/24-12 GRATE	2.02' Lt 104+00.00 "A"	7	g
D-5	7	h																								45										GLD	2.02' Lt 104+00.00 "A"	7	h
D-5	7	i	1																																	REMOVE INLET	2.90' Lt 100+56.23 "A"	7	i
D-6	8	a					1																													CAP INLET	2.08' Lt 110+70.96 "A"	8	a
D-6	9	a					1																													CAP INLET	1.80' Lt 116+21.99 "A"	9	a
D-6	10	a																2.56	1								1			326	0.95					G1 INLET W/24-12 GRATE	66.72' Lt 116+21.54 "A"	10	a
D-6	10	b																								40										GLD	66.72' Lt 116+21.54 "A"	10	b
D-6	10	c	1																																	REMOVE INLET	66.72' Lt 116+21.54 "A"	10	c
D-7	11	a																4.24	1								1			326	1.22					G1 INLET W/24-12 GRATE	1.81' Lt 124+56.38 "A"	11	a
D-7	11	b																								55										GLD	1.81' Lt 124+56.38 "A"	11	b
D-7	11	c	1																																	REMOVE INLET	1.81' Lt 124+56.38 "A"	11	c
D-7	12	a												7.35																	0.43					18" AP RISER W/J-1 COLLAR, SAFETY CAGE	1.58' Lt 128+49.86 "A"	12	a
D-7	12	b																2.40	1								1			326	0.95					G1 INLET W/24-12 GRATE	1.58' Lt 128+49.86 "A"	12	b
D-7	12	c																								45										GLD	1.58' Lt 128+49.86 "A"	12	c
D-7	13	a												5.82																	0.43					18" AP RISER W/J-1 COLLAR, SAFETY CAGE	1.57' Lt 130+52.54 "A"	13	a
D-7	13	b																2.37	1								1			326	0.95					G1 INLET W/24-12 GRATE	1.57' Lt 130+52.54 "A"	13	b
D-7	13	c																								45										GLD	1.57' Lt 130+52.54 "A"	13	c
SHEET TOTAL			3	0	0	0	2	0	-	0	332	0	0	14	0	0	-	-	-	-	-	-	-	-	-	300	-	-	-	2282	11	0	0	0	0	SHEET TOTAL			

DRAINAGE QUANTITIES

DQ-2

STATE OF CALIFORNIA - DEPARTMENT OF TRANSPORTATION

Caltrans

CONSULTANT FUNCTIONAL SUPERVISOR: ED KOUZI

CALCULATED-DESIGNED BY: GREG KEPPLER

CHECKED BY: GLENN YAMANAKA

REVISED BY

DATE REVISED

LAST REVISION 11-25-08

DATE PLOTTED => 6/30/2009
TIME PLOTTED => 5:34:49 PM

Dist	COUNTY	ROUTE	POST MILES TOTAL PROJECT	SHEET No.	TOTAL SHEETS
8	SBd	10	33.3/R36.9	XXX	XXX

REGISTERED CIVIL ENGINEER DATE

PLANS APPROVAL DATE

REGISTERED PROFESSIONAL ENGINEER GERARD F. DALZIEL No. 36333 Exp 6/30/10 CIVIL STATE OF CALIFORNIA

THE STATE OF CALIFORNIA OR ITS OFFICERS OR AGENTS SHALL NOT BE RESPONSIBLE FOR THE ACCURACY OR COMPLETENESS OF ELECTRONIC COPIES OF THIS PLAN SHEET.

SANBAG
1170 WEST 3RD STREET
2ND FLOOR
SAN BERNARDINO, CA 92410

AECOM
999 W. TOWN & COUNTRY RD
ORANGE, CA 92868

DRAINAGE PLAN SHEET No.	DRAINAGE SYSTEM No.	DRAINAGE UNIT No.	MODIFICATIONS: REMOVE INLET	REMOVE HEADWALL	REMOVE CULVERT	ABANDON INLET	CAP INLET	REMOVE CONCRETE (CHANNEL)	CULVERTS: PIPE JOINT CLASSIFICATION (N)	18" APC	24" APC	36" APC	42" APC	18" AP RISER	36" AP RISER	CLASS 4 CONCRETE (BACKFILL)	MAXIMUM HEIGHT COVER (N)	STRUCTURES: STRUCTURE HEIGHT (N)	G1 INLET (N)	G2 INLET (N)	GCP INLET (N)	GT3 INLET (N)	JUNCTION STRUCTURE (N)	"L" HEADWALL (N)	MANHOLE 322 (N)	GRATED LINE DRAIN	GRATE TYPE 24-12 (N)	GRATE TYPE 36R (N)	MANHOLE FRAME AND COVER (N)	MISCELLANEOUS IRON AND STEEL	MINOR CONCRETE (MINOR STRUCTURE)	MINOR CONCRETE (CURB AND GUTTER)	CLASS 2 CONCRETE (MINOR STRUCTURE)	DITCH EXCAVATION	CONCRETE (DITCH LINING)	DESCRIPTION	STATION	SYSTEM No.	UNIT No.
			EA	EA	Ft	EA	EA	Ft	-	Ft	Ft	Ft	Ft	Ft	Ft	Yd3	Ft	Ft	EA	EA	EA	EA	EA	EA	EA	Ft	EA	EA	EA	lbs	Yd3	Yd3	Yd3	Yd3	Yd3				
D-7	14	a							S			10.72					1.1														1.11					36" APC W/L-2 COLLAR	"A"	14	a
D-7	14	b																						1						170	2.95					"L" HEADWALL	90.00' L+ 131+01.26 "A"	14	b
D-7	14	c																3.04					1										2.39			JUNCTION STRUCTURE	61.37' L+ 134+00.73 "A"	14	c
D-8	14	d							S		3.83						2.0																			24" APC	"A"	14	d
D-8	14	e																3.85	1								1			326	1.14					G1 INLET W/24-12 GRATE	69.00' L+ 134+00.73 "A"	14	e
D-8	14	f																								50										GLD	69.00' L+ 134+00.73 "A"	14	f
D-8	14	g							S		148.56						3.1																			24" APC	"A"	14	g
D-8	14	h																3.04					1										2.39			JUNCTION STRUCTURE	61.42' L+ 135+50.00 "A"	14	h
D-7	14	i							S		8.48						2.2																			24" APC	"A"	14	i
D-8	14	j																3.56	1								1			326	1.07					G1 INLET W/24-12 GRATE	73.63' L+ 135+50.00 "A"	14	j
D-8	14	k																								50										GLD	73.63' L+ 135+50.00 "A"	14	k
D-8	14	l		1																																REMOVE HEADWALL	83.53' L+ 130+97.68 "A"	14	l
D-8	14	m			7.10																															REMOVE CULVERT (24" CMP)	"A"	14	m
D-8	14	n	1																																	REMOVE INLET	69.00' L+ 134+00.73 "A"	14	n
D-9	15	a							S		2.62						1.3														0.33					24" APC W/L-2 COLLAR	"A"	15	a
D-9	15	b																4.13		1							1			326	1.60					G2 INLET W/24-12 GRATE	69.00' L+ 146+46.41 "A"	15	b
D-9	15	c							S		76.35					25.05	2.5																			24" APC W/CI 4 Conc Bkf	"A"	15	c
D-9	15	d																3.04					1										2.39			JUNCTION STRUCTURE	67.53' L+ 147+26.04 "A"	15	d
D-9	15	e							S		9.72					3.19	1.7																			24" APC W/CI 4 Conc Bkf	"A"	15	e
D-9	15	f																3.49	1								1			326	1.06					G1 INLET W/24-12 GRATE	80.50' L+ 147+26.00 "A"	15	f
D-9	15	g							S		173.50					56.93	2.0																			24" APC W/CI 4 Conc Bkf	"A"	15	g
D-9	15	h																3.04					1										2.39			JUNCTION STRUCTURE	70.06' L+ 149+02.94 "A"	15	h
D-9	15	i							S		7.19					2.36	1.1																			24" APC W/CI 4 Conc Bkf	"A"	15	i
D-9	15	j																2.94	1								1			326	0.95					G1 INLET W/24-12 GRATE	80.50' L+ 149+02.94 "A"	15	j
D-9	15	k																								20										GLD	80.50' L+ 149+02.94 "A"	15	k
D-9	15	l							S		221.39					72.65	2.0																			24" APC W/CI 4 Conc Bkf	"A"	15	l
D-9	15	m																3.04					1										2.39			JUNCTION STRUCTURE	70.06' L+ 151+27.82 "A"	15	m
D-9	15	n							S		7.19					2.36	1.2																			24" APC W/CI 4 Conc Bkf	"A"	15	n
D-9	15	o																2.93	1								1			326	0.95					G1 INLET W/24-12 GRATE	80.50' L+ 151+27.82 "A"	15	o
D-9	15	p																								15										GLD	80.50' L+ 151+27.82 "A"	15	p
D-9	15	q	1																																	REMOVE INLET	69.00' L+ 146+46.41 "A"	15	q
D-9	16	a							S	11.57							3.2														0.29					18" APC W/L-2 COLLAR	"A"	16	a
D-9	16	b																4.34	1								1			326	1.24					G1 INLET W/24-12 GRATE	81.21' L+ 153+47.77 "A"	16	b
D-9	16	c																								7										GLD	81.21' L+ 153+47.77 "A"	16	c
D-9	16	d	1																																	REMOVE INLET	81.21' L+ 153+47.77 "A"	16	d
SHEET TOTAL			3	1	8	0	0	0	-	12	659	11	0	0	0	163	-	-	-	-	-	-	-	-	-	142	-	-	-	2452	13	0	12	0	0	SHEET TOTAL			

DRAINAGE QUANTITIES

DQ-3

REVISED BY	DATE REVISED
GREG KEPPLER	GLENN YAMANAKA

CALCULATED-DESIGNED BY
CHECKED BY

CONSULTANT FUNCTIONAL SUPERVISOR: ED KOUZI

STATE OF CALIFORNIA - DEPARTMENT OF TRANSPORTATION

Caltrans

LAST REVISION 11-25-08

DATE PLOTTED => 6/30/2009
TIME PLOTTED => 5:34:50 PM

RELATIVE BORDER SCALE IS IN INCHES 0 1 2 3

USERNAME => YamanakaG
DGN FILE => ...\0f150id03.dgn

CU 08220

EA 0F1500

Dist	COUNTY	ROUTE	POST MILES TOTAL PROJECT	SHEET No.	TOTAL SHEETS
8	SBd	10	33.3/R36.9	XXX	XXX

REGISTERED CIVIL ENGINEER DATE

PLANS APPROVAL DATE

REGISTERED PROFESSIONAL ENGINEER GERARD F. DALZIEL No. 36333 Exp 6/30/10 CIVIL STATE OF CALIFORNIA

THE STATE OF CALIFORNIA OR ITS OFFICERS OR AGENTS SHALL NOT BE RESPONSIBLE FOR THE ACCURACY OR COMPLETENESS OF ELECTRONIC COPIES OF THIS PLAN SHEET.

SANBAG
1170 WEST 3RD STREET
2ND FLOOR
SAN BERNARDINO, CA 92410

AECOM
999 W. TOWN & COUNTRY RD
ORANGE, CA 92868

DRAINAGE PLAN SHEET No.	DRAINAGE SYSTEM No.	DRAINAGE UNIT No.	MODIFICATIONS: REMOVE INLET	REMOVE HEADWALL	REMOVE CULVERT	ABANDON INLET	CAP INLET	REMOVE CONCRETE (CHANNEL)	CULVERTS: PIPE JOINT CLASSIFICATION (N)	18" APC	24" APC	36" APC	42" APC	18" AP RISER	36" AP RISER	CLASS 4 CONCRETE (BACKFILL)	MAXIMUM HEIGHT COVER (N)	STRUCTURES: STRUCTURE HEIGHT (N)	G1 INLET (N)	G2 INLET (N)	GCP INLET (N)	GT3 INLET (N)	JUNCTION STRUCTURE (N)	"L" HEADWALL (N)	MANHOLE 322 (N)	GRATED LINE DRAIN	GRATE TYPE 24-12 (N)	GRATE TYPE 36R (N)	MANHOLE FRAME AND COVER (N)	MISCELLANEOUS IRON AND STEEL	MINOR CONCRETE (MINOR STRUCTURE)	MINOR CONCRETE (CURB AND GUTTER)	CLASS 2 CONCRETE (MINOR STRUCTURE)	DITCH EXCAVATION	CONCRETE (DITCH LINING)	DESCRIPTION	STATION	SYSTEM No.	UNIT No.
			EA	EA	Ft	EA	EA	Ft	-	Ft	Ft	Ft	Ft	Ft	Ft	Yd3	Ft	Ft	EA	EA	EA	EA	EA	EA	EA	Ft	EA	EA	EA	lbs	Yd3	Yd3	Yd3	Yd3	Yd3				
D-9	17	a							S		14.08					4.62	1.7														0.33					24" APC W/L-2 COLLAR, CI 4 Conc Bkf	"A"	17	a
D-9	17	b																3.28	1								1			326	1.01					G1 INLET W/24-12 GRATE	83.73' Lt 154+73.74 "A"	17	b
D-9	17	c																								15										GLD	83.73' Lt 154+73.74 "A"	17	c
D-9	17	d							S		5.00						10.5														0.33					24" APC W/L-2 COLLAR	"A"	17	d
D-9	17	e							D		20.68						10.5														0.33					24" APC W/L-2 COLLAR	"A"	17	e
D-9	17	f	1																																	REMOVE INLET	68.65' Lt 154+73.74 "A"	17	f
D-9	17	g			33.30																															REMOVE CULVERT (24" CMP)	"A"	17	g
D-9	18	a							S	14.37						3.71	1.9														0.33					18" APC W/L-2 COLLAR, CI 4 Conc Bkf	"A"	18	a
D-9	18	b																2.99	1								1			326	0.95					G1 INLET W/24-12 GRATE	86.91' Lt 156+32.80 "A"	18	b
D-9	18	c	1																																	REMOVE INLET	71.88' Lt 156+28.95 "A"	18	c
D-9	19	a					1																													CAP INLET	83.86' Lt 157+64.60 "A"	19	a
D-9	19	b							S		4.15						2.0														0.43					24" APC W/L-3 COLLAR	"A"	19	b
D-9	19	c																3.93				1					2			652	2.05					GT3 INLET W/2x24-12 GRATES	91.64' Lt 157+68.53 "A"	19	c
D-9	19	d							S		11.47						8.7														0.33					24" APC W/L-2 COLLAR	"A"	19	d
D-9	19	e							D		65.27						12.2														0.43					24" APC W/L-3 COLLAR	"A"	19	e
D-9	19	f														58.10																				CI 4 Conc Bkf	"A"	19	f
D-10	19	g							S	40.98						10.59	1.2														0.29					18" APC W/L-2 COLLAR, CI 4 Conc Bkf	"A"	19	g
D-10	19	h													4.35			3.85			1							1		236	0.42					GCP INLET W/36R GRATE	76.53' Lt 159+82.89 "A"	19	h
D-10	19	i			82.50																															REMOVE CULVERT (36" CMP)	"A"	19	i
D-9	20	a												8.28																	0.43					18" AP RISER W/J-1 COLLAR, SAFETY CAGE	1.65' Lt 157+64.17 "A"	20	a
D-9	20	b																2.47	1								1			326	0.95					G1 INLET W/24-12 GRATE	1.65' Lt 157+64.17 "A"	20	b
D-9	20	c																								10										GLD	1.65' Lt 157+64.17 "A"	20	c
D-9	20	d												7.48																	0.43					18" AP RISER W/J-1 COLLAR, SAFETY CAGE	1.48' Lt 157+97.66 "A"	20	d
D-9	20	e																2.46	1								1			326	0.95					G1 INLET W/24-12 GRATE	1.48' Lt 157+97.66 "A"	20	e
D-10	20	f																								10										GLD	1.48' Lt 157+97.66 "A"	20	f
D-10	21	a							S		5.63						1.2														0.33					24" APC W/L-2 COLLAR	"A"	21	a
D-10	21	b																						1						110	1.74					"L" HEADWALL	90.00' Lt 166+06.36 "A"	21	b
D-10	21	c																																94.2		BIOFILTRATION SWALE	"A"	21	c
D-10	21	d																																	1.0	CONCRETE SPILLWAY	78.50' Lt 168+71.92 "A"	21	d
D-10	21	e		1																																REMOVE HEADWALL	84.56' Lt 166+02.74 "A"	21	e
SHEET TOTAL			2	1	116	0	1	0	-	56	127	0	0	16	5	78	-	-	-	-	-	-	-	-	-	35	-	-	-	2302	13	0	0	95	1	SHEET TOTAL			

DRAINAGE QUANTITIES

DQ-4

GREG KEPPLER — REVISED BY
GLENN YAMANAKA — DATE REVISED
CALCULATED-DESIGNED BY
CHECKED BY
CONSULTANT FUNCTIONAL SUPERVISOR
ED KOUZI
STATE OF CALIFORNIA - DEPARTMENT OF TRANSPORTATION
Caltrans

LAST REVISION 11-25-08
DATE PLOTTED => 6/30/2009
TIME PLOTTED => 5:34:50 PM

RELATIVE BORDER SCALE IS IN INCHES 0 1 2 3

USERNAME => YamanakaG
DGN FILE => ...\0f150id04.dgn

CU 08220

EA 0F1500

Dist	COUNTY	ROUTE	POST MILES TOTAL PROJECT	SHEET No.	TOTAL SHEETS
8	SBd	10	33.3/R36.9	XXX	XXX

REGISTERED CIVIL ENGINEER DATE

PLANS APPROVAL DATE

REGISTERED PROFESSIONAL ENGINEER GERARD F. DALZIEL No. 36333 Exp 6/30/10 CIVIL STATE OF CALIFORNIA

THE STATE OF CALIFORNIA OR ITS OFFICERS OR AGENTS SHALL NOT BE RESPONSIBLE FOR THE ACCURACY OR COMPLETENESS OF ELECTRONIC COPIES OF THIS PLAN SHEET.

SANBAG
1170 WEST 3RD STREET
2ND FLOOR
SAN BERNARDINO, CA 92410

AECOM
999 W. TOWN & COUNTRY RD
ORANGE, CA 92868

DRAINAGE PLAN SHEET No.	DRAINAGE SYSTEM No.	DRAINAGE UNIT No.	MODIFICATIONS: REMOVE INLET	REMOVE HEADWALL	REMOVE CULVERT	ABANDON INLET	CAP INLET	REMOVE CONCRETE (CHANNEL)	CULVERTS: (N) PIPE JOINT CLASSIFICATION	18" APC	24" APC	36" APC	42" APC	18" AP RISER	36" AP RISER	CLASS 4 CONCRETE (BACKFILL)	(N) MAXIMUM HEIGHT COVER	STRUCTURES: (N) STRUCTURE HEIGHT	(N) G1 INLET	(N) G2 INLET	(N) GCP INLET	(N) GT3 INLET	(N) JUNCTION STRUCTURE	(N) "L" HEADWALL	(N) MANHOLE 322	GRATED LINE DRAIN	(N) GRATE TYPE 24-12	GRATE TYPE 36R	(N) MANHOLE FRAME AND COVER	MISCELLANEOUS IRON AND STEEL	MINOR CONCRETE (MINOR STRUCTURE)	MINOR CONCRETE (CURB AND GUTTER)	CLASS 2 CONCRETE (MINOR STRUCTURE)	DITCH EXCAVATION	CONCRETE (DITCH LINING)	DESCRIPTION	STATION	SYSTEM No.	UNIT No.
			EA	EA	Ft	EA	EA	Ft	-	Ft	Ft	Ft	Ft	Ft	Ft	Yd3	Ft	Ft	EA	EA	EA	EA	EA	EA	EA	Ft	EA	EA	EA	lbs	Yd3	Yd3	Yd3	Yd3	Yd3				
D-11	22	a							S	27.05						6.99	2.7														0.29					18" APC W/L-2 COLLAR, CI 4 Conc Bfk	"A"	22	a
D-11	22	b																2.80	1								1			326	0.95					G1 INLET W/24-12 GRATE	87.21′ L+ 172+44.81 "A"	22	b
D-11	22	c																								25										GLD	87.21′ L+ 172+44.81 "A"	22	c
D-11	22	d			27.70																															REMOVE CULVERT (18" RCP)	"A"	22	d
D-11	22	e	1																																	REMOVE INLET	87.21′ L+ 172+44.81 "A"	22	e
D-11	23	a							S	12.72						3.29	1.7														0.29					18" APC W/L-2 COLLAR, CI 4 Conc Bkf	"A"	23	a
D-11	23	b																2.92	1								1			326	0.95					G1 INLET W/24-12 GRATE	69.00′ L+ 177+52.69 "A"	23	b
D-11	23	c																								30										GLD	69.00′ L+ 177+52.69 "A"	23	c
D-11	23	d	1																																	REMOVE INLET	55.45′ L+ 177+47.25 "A"	23	d
D-12	24	a													6.95			6.00							1				1	235			10.51			MANHOLE 322 W/36" AP RISER, MH F & C	86.55′ L+ 182+91.23 "A"	24	a
D-12	24	b							S	46.70							8.0																			18" APC	"A"	24	b
D-12	24	c																3.00	1								1			326	0.95					G1 INLET W/24-12 GRATE	89.48′ L+ 182+39.64 "A"	24	c
D-12	24	d																																	1.0	CONCRETE APRON - TYPE B	89.48′ L+ 182+39.64 "A"	24	d
D-12	24	e																																84.4	22.9	CONCRETE CHANNEL	"A"	24	e
D-12	24	f							S				50.24				8.7																			42" APC	"A"	24	f
D-12	24	g																5.55				1							1	235			3.46			JUNCTION STRUCTURE W/MH F & C	81.50′ L+ 183+47.15 "A"	24	g
D-12	24	h							S	3.82							2.5																			18" APC	"A"	24	h
D-12	24	i																3.00				1					2			652	1.73					GT3 INLET W/2x24-12 GRATES	89.32′ L+ 183+47.15 "A"	24	i
D-12	24	j							S				248.77				2.5																			42" APC	"A"	24	j
D-12	24	k																5.39				1							1	235			3.38			JUNCTION STRUCTURE W/MH F & C	81.50′ L+ 186+00.00 "A"	24	k
D-12	24	l							S	3.83							2.1																			18" APC	"A"	24	l
D-12	24	m																3.00				1					2			652	1.73					GT3 INLET W/2x24-12 GRATES	89.33′ L+ 186+00.00 "A"	24	m
D-12	24	n							S				215.65				3.2																			42" APC	"A"	24	n
D-12	24	o																6.01				1							1	235			3.63			JUNCTION STRUCTURE W/MH F & C	81.50′ L+ 188+19.65 "A"	24	o
D-12	24	p							S		10.98						4.5														0.33					24" APC W/L-2 COLLAR	"A"	24	p
D-12	24	q							S				78.30				3.0																			42" APC	"A"	24	q
D-12	24	r																3.68				1							1	235			2.68			JUNCTION STRUCTURE W/MH F & C	80.50′ L+ 189+01.95 "A"	24	r
D-12	24	s							S	46.39							4.3																			18" APC	"A"	24	s
D-12	24	t													3.61			3.11			1							1		236	0.42					GCP INLET W/36R GRATE	76.20′ L+ 189+51.50 "A"	24	t
D-12	24	u																																	3.5	CONCRETE APRON - TYPE A	76.20′ L+ 189+51.50 "A"	24	u
D-12	24	v																														33.50				CURB (TYPE A2-8)	"A"	24	v
D-12	24	w						630																												REMOVE CONCRETE CHANNEL	"A"	24	w
SHEET TOTAL			2	0	28	0	0	630	-	141	11	0	593	0	11	11	-	-	-	-	-	-	-	-	-	55	-	-	-	3693	8	34	24	85	28	SHEET TOTAL			

DRAINAGE QUANTITIES

DQ-5

STATE OF CALIFORNIA - DEPARTMENT OF TRANSPORTATION

Caltrans

CONSULTANT FUNCTIONAL SUPERVISOR: ED KOUZI

CALCULATED-DESIGNED BY: GREG KEPPLER

CHECKED BY: GLENN YAMANAKA

REVISED BY

DATE REVISED

LAST REVISION 11-25-08

DATE PLOTTED => 6/30/2009
TIME PLOTTED => 5:34:51 PM

RELATIVE BORDER SCALE IS IN INCHES 0 1 2 3

USERNAME => YamanakaG
DGN FILE => ...\0f150id05.dgn

CU 08220

EA 0F1500

Dist	COUNTY	ROUTE	POST MILES TOTAL PROJECT	SHEET No.	TOTAL SHEETS
8	SBd	10	33.3/R36.9	XXX	XXX

REGISTERED CIVIL ENGINEER DATE

PLANS APPROVAL DATE

REGISTERED PROFESSIONAL ENGINEER GERARD F. DALZIEL No. 36333 Exp 6/30/10 CIVIL STATE OF CALIFORNIA

THE STATE OF CALIFORNIA OR ITS OFFICERS OR AGENTS SHALL NOT BE RESPONSIBLE FOR THE ACCURACY OR COMPLETENESS OF ELECTRONIC COPIES OF THIS PLAN SHEET.

SANBAG
1170 WEST 3RD STREET
2ND FLOOR
SAN BERNARDINO, CA 92410

AECOM
999 W. TOWN & COUNTRY RD
ORANGE, CA 92868

DRAINAGE PLAN SHEET No.	DRAINAGE SYSTEM No.	DRAINAGE UNIT No.	MODIFICATIONS: REMOVE INLET	REMOVE HEADWALL	REMOVE CULVERT	ABANDON INLET	CAP INLET	REMOVE CONCRETE (CHANNEL)	CULVERTS: PIPE JOINT CLASSIFICATION (N)	18" APC	24" APC	36" APC	42" APC	18" AP RISER	36" AP RISER	CLASS 4 CONCRETE (BACKFILL)	MAXIMUM HEIGHT COVER (N)	STRUCTURES: STRUCTURE HEIGHT (N)	G1 INLET (N)	G2 INLET (N)	GCP INLET (N)	GT3 INLET (N)	JUNCTION STRUCTURE (N)	"L" HEADWALL (N)	MANHOLE 322 (N)	GRATED LINE DRAIN	GRATE TYPE 24-12 (N)	GRATE TYPE 36R (N)	MANHOLE FRAME AND COVER (N)	MISCELLANEOUS IRON AND STEEL	MINOR CONCRETE (MINOR STRUCTURE)	MINOR CONCRETE (CURB AND GUTTER)	CLASS 2 CONCRETE (MINOR STRUCTURE)	DITCH EXCAVATION	CONCRETE (DITCH LINING)	DESCRIPTION	STATION	SYSTEM No.	UNIT No.
			EA	EA	Ft	EA	EA	Ft	-	Ft	Ft	Ft	Ft	Ft	Ft	Yd3	Ft	Ft	EA	EA	EA	EA	EA	EA	EA	Ft	EA	EA	EA	lbs	Yd3	Yd3	Yd3	Yd3	Yd3				
D-13	25	a																9.78		1							1			326	4.13					G2 INLET W/24-12 GRATE	2.86' Lt 202+23.20 "A"	25	a
D-13	25	b							S	120.23							3.0																			18" APC	"A"	25	b
D-13	25	c																3.50	1								1			326	1.06					G1 INLET W/24-12 GRATE	2.83' Lt 200+99.80 "A"	25	c
D-13	25	d													9.40			3.00					1					1		236			2.39			JS W/36" AP RISER, 36R GRATE	73.39' Lt 201+93.08 "A"	25	d
D-13	25	e																																	2.9	CONCRETE APRON - TYPE C	73.39' Lt 201+93.08 "A"	25	e
D-13	25	f					1																													CAP INLET	83.50' Lt 201+89.85 "A"	25	f
D-13	25	g							S	187.60																										18" APC	"A"	25	g
D-13	25	h													4.00			3.50			1							1		236	0.42					GCP INLET W/36R GRATE	72.73' Lt 203+78.99 "A"	25	h
D-13	25	i																																	3.0	CONCRETE APRON - TYPE C	72.73' Lt 203+78.99 "A"	25	i
D-13	25	j			6.30																															REMOVE CULVERT (12" CSP RISER)	"A"	25	j
D-13	25	k	1																																	REMOVE INLET	2.86' Lt 202+23.20 "A"	25	k
D-14	26	a																3.47	1								1			326	1.05					G1 INLET W/24-12 GRATE	81.00' Lt 213+28.50 "A"	26	a
D-14	26	b							S	88.41							2.6																			18" APC	"A"	26	b
D-14	26	c																3.56	1								1			326	1.07					G1 INLET W/24-12 GRATE	81.00' Lt 212+37.13 "A"	26	c
D-14	26	d			13.70																															REMOVE CULVERT (18" RCP)	"A"	26	d
D-14	26	e	1																																	REMOVE INLET	68.03' Lt 212+48.63 "A"	26	e
D-14	26	f			97.50																															REMOVE CULVERT (18" RCP)	"A"	26	f
D-14	26	g							S	15.43							2.7														0.33					18" APC W/L-2 COLLAR	"A"	26	g
D-14	27	a							S		14.84						2.9														0.33					24" APC W/L-2 COLLAR	"A"	27	a
D-14	27	b																3.66					1					1		236			2.68			JUNCTION STRUCTURE W/36R GRATE	81.25' Lt 217+19.62 "A"	27	b
D-14	27	c							S	232.94							1.9																			18" APC	"A"	27	c
D-14	27	d																3.00					1					1		236			2.39			JUNCTION STRUCTURE W/36R GRATE	89.53' Lt 214+83.65 "A"	27	d
D-14	27	e		1																																REMOVE HEADWALL	66.53' Lt 217+29.68 "A"	27	e
D-14	27	f						242																												REMOVE CONCRETE CHANNEL	"A"	27	f
D-15	28	a																2.52					1										2.18			JUNCTION STRUCTURE	74.25' Lt 224+16.29 "A"	28	a
D-15	28	b							S		195.22					64.06	1.2																			24" APC W/CI 4 Conc Bkf	"A"	28	b
D-15	28	c							S		147.58						1.2																			24" APC	"A"	28	c
D-15	28	d																3.04					1										2.39			JUNCTION STRUCTURE	74.25' Lt 220+70.00 "A"	28	d
D-15	28	e							S		17.96						4.5																			24" APC	"A"	28	e
D-15	28	f																3.00				1					2			652	1.73					GT3 INLET W/2x24-12 GRATES	95.96' Lt 220+70.00 "A"	28	f
D-15	28	g							S	233.69							2.0																			18" APC	"A"	28	g
D-15	28	h																2.89				1					2			652	1.73					GT3 INLET W/2x24-12 GRATES	95.95' Lt 218+30.00 "A"	28	h
D-15	29	a																																85.8		BIOFILTRATION SWALE	"A"	29	a
SHEET TOTAL			2	1	118	0	1	242	-	879	376	0	0	0	14	65	-	-	-	-	-	-	-	-	-	0	-	-	-	3552	12	0	13	86	6	SHEET TOTAL			
TOTAL			14	3	271	3	4	872	-	1086	2443	11	593	34	33	314	-	-	-	-	-	-	-	-	-	737	-	-	-	16708	66	34	51	474	39	TOTAL			

DRAINAGE QUANTITIES

DQ-6

STATE OF CALIFORNIA - DEPARTMENT OF TRANSPORTATION

Caltrans

CONSULTANT FUNCTIONAL SUPERVISOR: ED KOUZI

CALCULATED-DESIGNED BY: GREG KEPPLER

CHECKED BY: GLENN YAMANAKA

REVISED BY

DATE REVISED

LAST REVISION 11-25-08

DATE PLOTTED => 6/30/2009
TIME PLOTTED => 5:34:51 PM

RELATIVE BORDER SCALE IS IN INCHES 0 1 2 3

USERNAME => YamanakaG
DGN FILE => ...\0f150id06.dgn

CU 08220

EA 0F1500

Dist	COUNTY	ROUTE	POST MILES TOTAL PROJECT	SHEET No.	TOTAL SHEETS
8	SBd	10	33.3/R36.9	XXX	XXX

REGISTERED CIVIL ENGINEER DATE

PLANS APPROVAL DATE

REGISTERED PROFESSIONAL ENGINEER ARIEF NAFTALI No. 64286 Exp 6/30/09 CIVIL STATE OF CALIFORNIA

THE STATE OF CALIFORNIA OR ITS OFFICERS OR AGENTS SHALL NOT BE RESPONSIBLE FOR THE ACCURACY OR COMPLETENESS OF ELECTRONIC COPIES OF THIS PLAN SHEET.

SANBAG
1170 WEST 3RD STREET
2ND FLOOR
SAN BERNARDINO, CA 92410

AECOM
999 W. TOWN & COUNTRY RD
ORANGE, CA 92868

NOTE:

1. LOCATION OF UTILITY FACILITIES SHOWN ON THESE PLANS ARE APPROXIMATE AND SHALL BE VERIFIED BY THE CONTRACTOR PRIOR TO CONSTRUCTION.
2. UTILITY OWNERSHIP ON THIS PROJECT:
   WATER-R.M.W.C., W.H.W.C. OR Y.V.W.D.
   ELECTRIC OVERHEAD-SCE
   COMMUNICATION OVERHEAD-VERIZON OR T.W.C.
   COMMUNICATION UNDERGROUND-VERIZON
   GAS-S.C.G.C.
   STORM DRAIN-CALTRANS

LEGEND

- —w— WATER
- —g— GAS
- —e— ELECTRICAL
- —t— TELEPHONE
- —tv— CABLE-TV
- —s— SEWER
- PROPOSED RETAINING/SOIL NAIL/SOUND WALL
- PROPOSED CONCRETE BARRIER
- PROPOSED METAL BEAM GUARD RAIL
- PROPOSED DRAINAGE FEATURE
- Exist DRAINAGE FEATURE

ABBREVIATIONS

B.V.W.M.C.	BEAR VALLEY MUTUAL WATER CO
R.M.W.C.	REDLANDS MUNICIPAL WATER CO
W.H.W.C.	WESTERN HEIGHTS WATER CO
Y.V.W.D.	YUCAIPA VALLEY WATER DISTRICT
S.C.G.C.	SOUTHERN CALIFORNIA GAS CO
SCE	SOUTHERN CALIFORNIA EDISON
T.W.C.	TIME WARNER CABLE
MWD	METROPOLITAN WATER DISTRICT

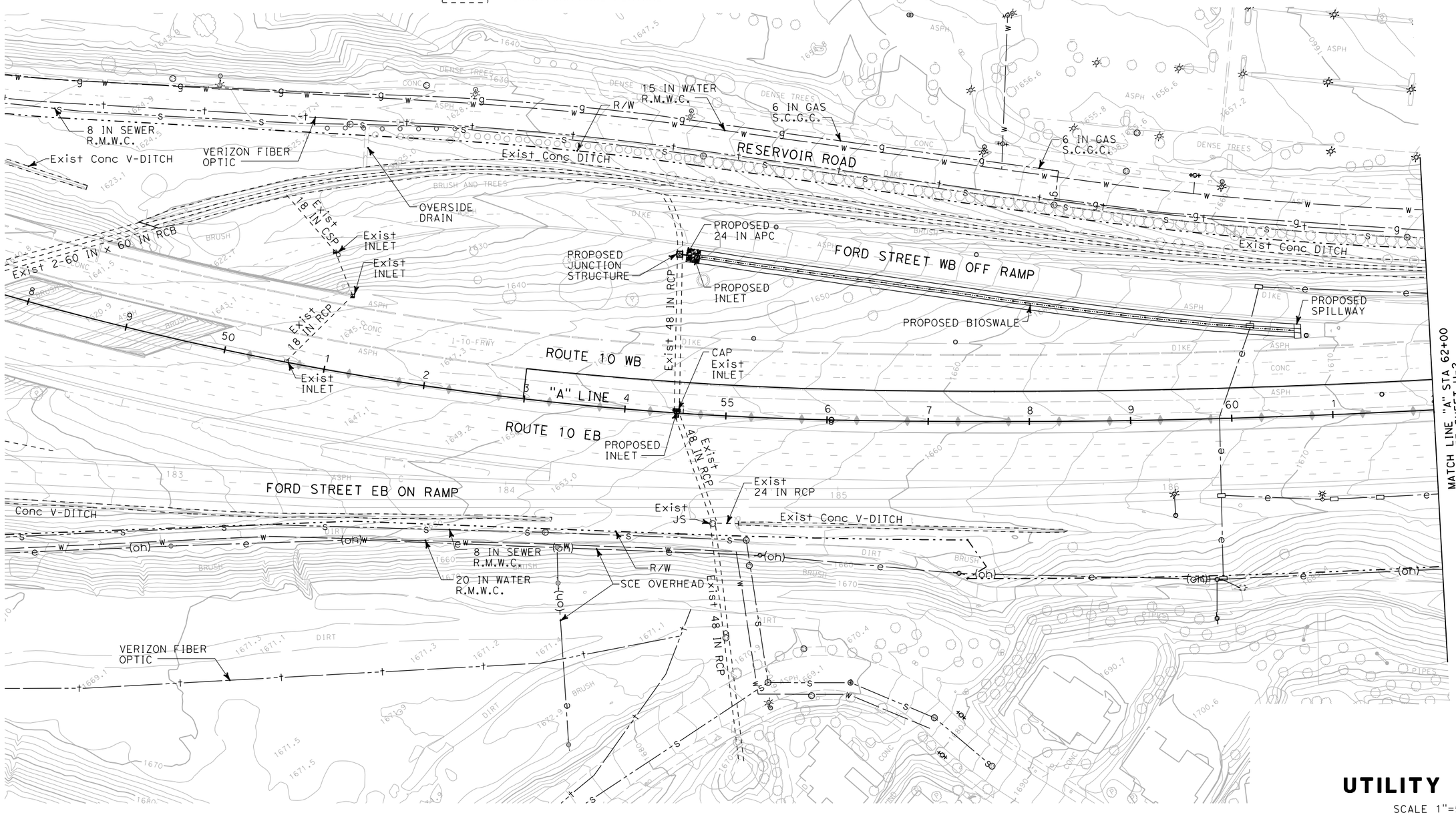

THIS PLAN ACCURATE FOR UTILITY INFORMATION ONLY

UTILITY PLAN

SCALE 1"=50'

U-1

STATE OF CALIFORNIA - DEPARTMENT OF TRANSPORTATION

Caltrans

CONSULTANT FUNCTIONAL SUPERVISOR: ED KOUZI

CALCULATED-DESIGNED BY: JASON SMITH

CHECKED BY: ED KOUZI

REVISED BY

DATE REVISED

LAST REVISION 00-00-00

DATE PLOTTED => 7/1/2009
TIME PLOTTED => 10:04:10 AM

RELATIVE BORDER SCALE IS IN INCHES 0 1 2 3

USERNAME => SmithJH
DGN FILE => ...\0f150ka001.dgn

CU 08220

EA 0F1500

Dist	COUNTY	ROUTE	POST MILES TOTAL PROJECT	SHEET No.	TOTAL SHEETS
8	SBd	10	33.3/R36.9	XXX	XXX

REGISTERED CIVIL ENGINEER DATE

PLANS APPROVAL DATE

REGISTERED PROFESSIONAL ENGINEER ARIEF NAFTALI No. 64286 Exp 6/30/09 CIVIL STATE OF CALIFORNIA

THE STATE OF CALIFORNIA OR ITS OFFICERS OR AGENTS SHALL NOT BE RESPONSIBLE FOR THE ACCURACY OR COMPLETENESS OF ELECTRONIC COPIES OF THIS PLAN SHEET.

SANBAG
1170 WEST 3RD STREET
2ND FLOOR
SAN BERNARDINO, CA 92410

AECOM
999 W. TOWN & COUNTRY RD
ORANGE, CA 92868

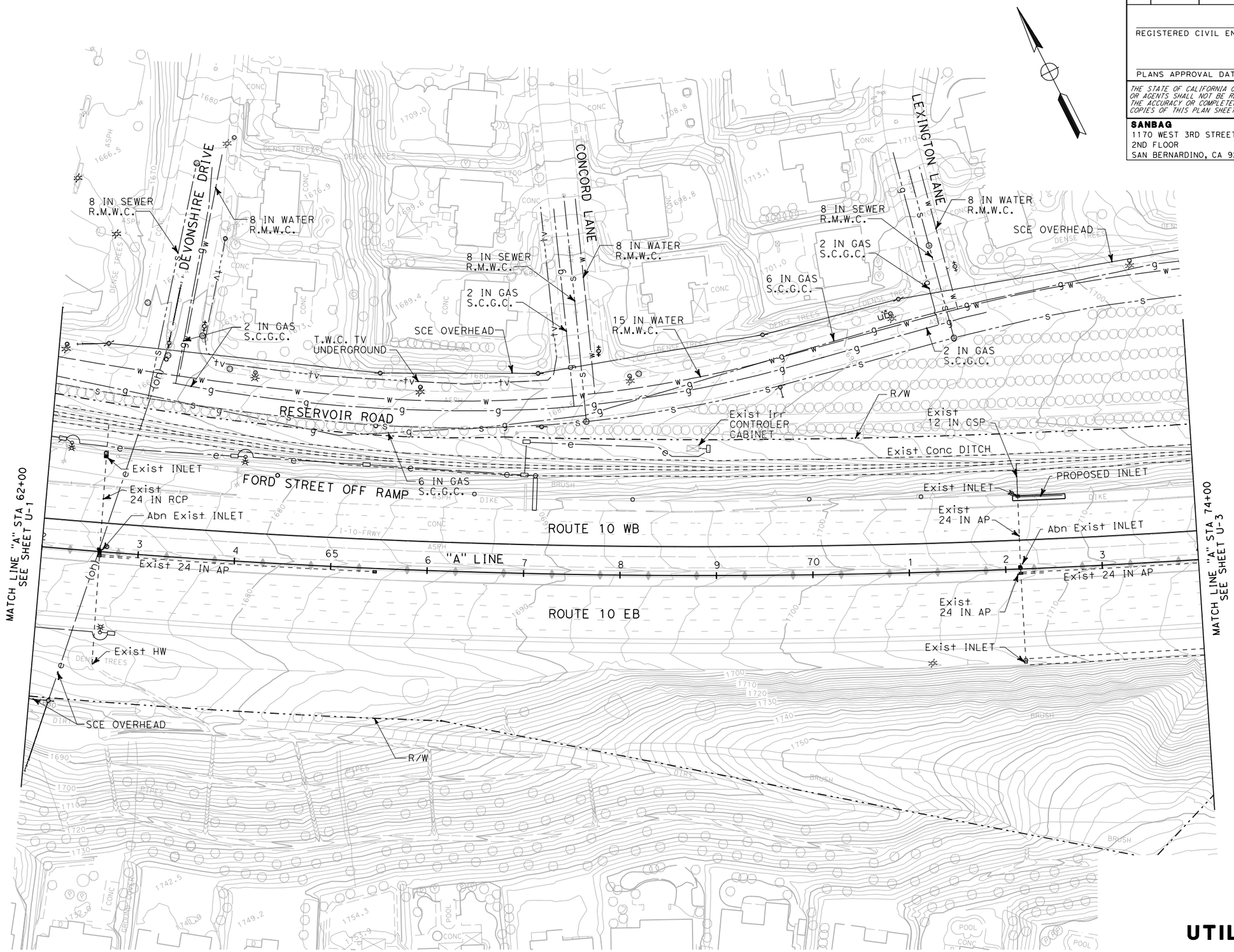

THIS PLAN ACCURATE FOR UTILITY INFORMATION ONLY

UTILITY PLAN

SCALE 1"=50'

U-2

STATE OF CALIFORNIA - DEPARTMENT OF TRANSPORTATION

Caltrans

CONSULTANT FUNCTIONAL SUPERVISOR: ED KOUZI

CALCULATED-DESIGNED BY: JASON SMITH

CHECKED BY: ED KOUZI

REVISED BY

DATE REVISED

LAST REVISION 00-00-00

DATE PLOTTED => 7/1/2009
TIME PLOTTED => 10:04:15 AM

RELATIVE BORDER SCALE IS IN INCHES 0 1 2 3

USERNAME => SmithJH
DGN FILE => ...\0f150ka002.dgn

CU 08220

EA 0F1500

Dist	COUNTY	ROUTE	POST MILES TOTAL PROJECT	SHEET No.	TOTAL SHEETS
8	SBd	10	33.3/R36.9	XXX	XXX

REGISTERED CIVIL ENGINEER DATE

PLANS APPROVAL DATE

REGISTERED PROFESSIONAL ENGINEER ARIEF NAFTALI No. 64286 Exp 6/30/09 CIVIL STATE OF CALIFORNIA

THE STATE OF CALIFORNIA OR ITS OFFICERS OR AGENTS SHALL NOT BE RESPONSIBLE FOR THE ACCURACY OR COMPLETENESS OF ELECTRONIC COPIES OF THIS PLAN SHEET.

SANBAG
1170 WEST 3RD STREET
2ND FLOOR
SAN BERNARDINO, CA 92410

AECOM
999 W. TOWN & COUNTRY RD
ORANGE, CA 92868

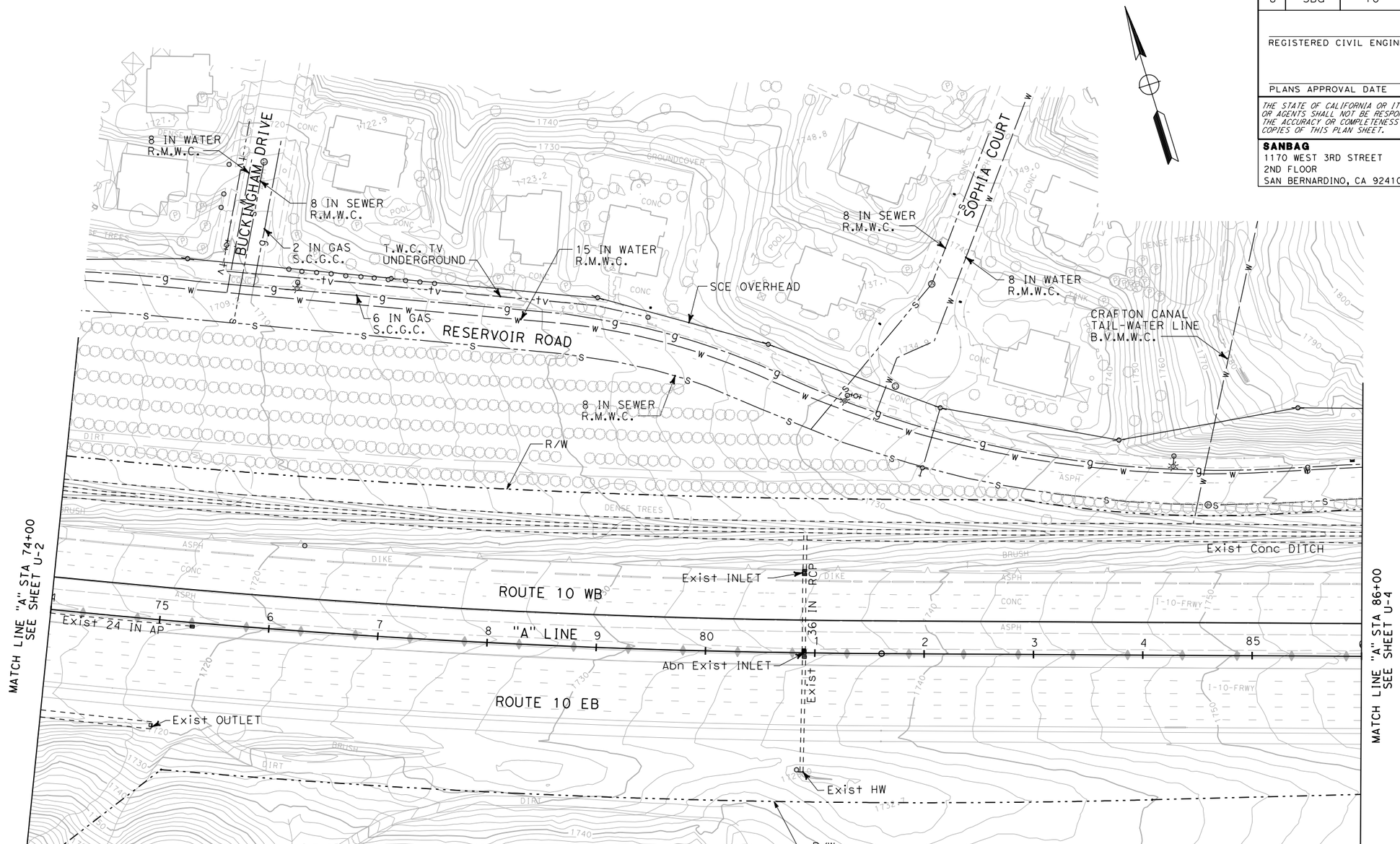

UTILITY PLAN

SCALE 1"=50'

U-3

THIS PLAN ACCURATE FOR UTILITY INFORMATION ONLY

STATE OF CALIFORNIA - DEPARTMENT OF TRANSPORTATION

Caltrans

CONSULTANT FUNCTIONAL SUPERVISOR: ED KOUZI

CALCULATED-DESIGNED BY: JASON SMITH

CHECKED BY: ED KOUZI

REVISED BY

DATE REVISED

RELATIVE BORDER SCALE IS IN INCHES 0 1 2 3

USERNAME => SmithJH
DGN FILE => ...\0f150ka003.dgn

CU 08220

EA 0F1500

LAST REVISION 00-00-00

DATE PLOTTED => 7/1/2009
TIME PLOTTED => 10:04:19 AM

Dist	COUNTY	ROUTE	POST MILES TOTAL PROJECT	SHEET No.	TOTAL SHEETS
8	SBd	10	33.3/R36.9	XXX	XXX

REGISTERED CIVIL ENGINEER DATE

PLANS APPROVAL DATE

REGISTERED PROFESSIONAL ENGINEER
ARIEF NAFTALI
No. 64286
Exp 6/30/09
CIVIL
STATE OF CALIFORNIA

THE STATE OF CALIFORNIA OR ITS OFFICERS OR AGENTS SHALL NOT BE RESPONSIBLE FOR THE ACCURACY OR COMPLETENESS OF ELECTRONIC COPIES OF THIS PLAN SHEET.

SANBAG
1170 WEST 3RD STREET
2ND FLOOR
SAN BERNARDINO, CA 92410

AECOM
999 W. TOWN & COUNTRY RD
ORANGE, CA 92868

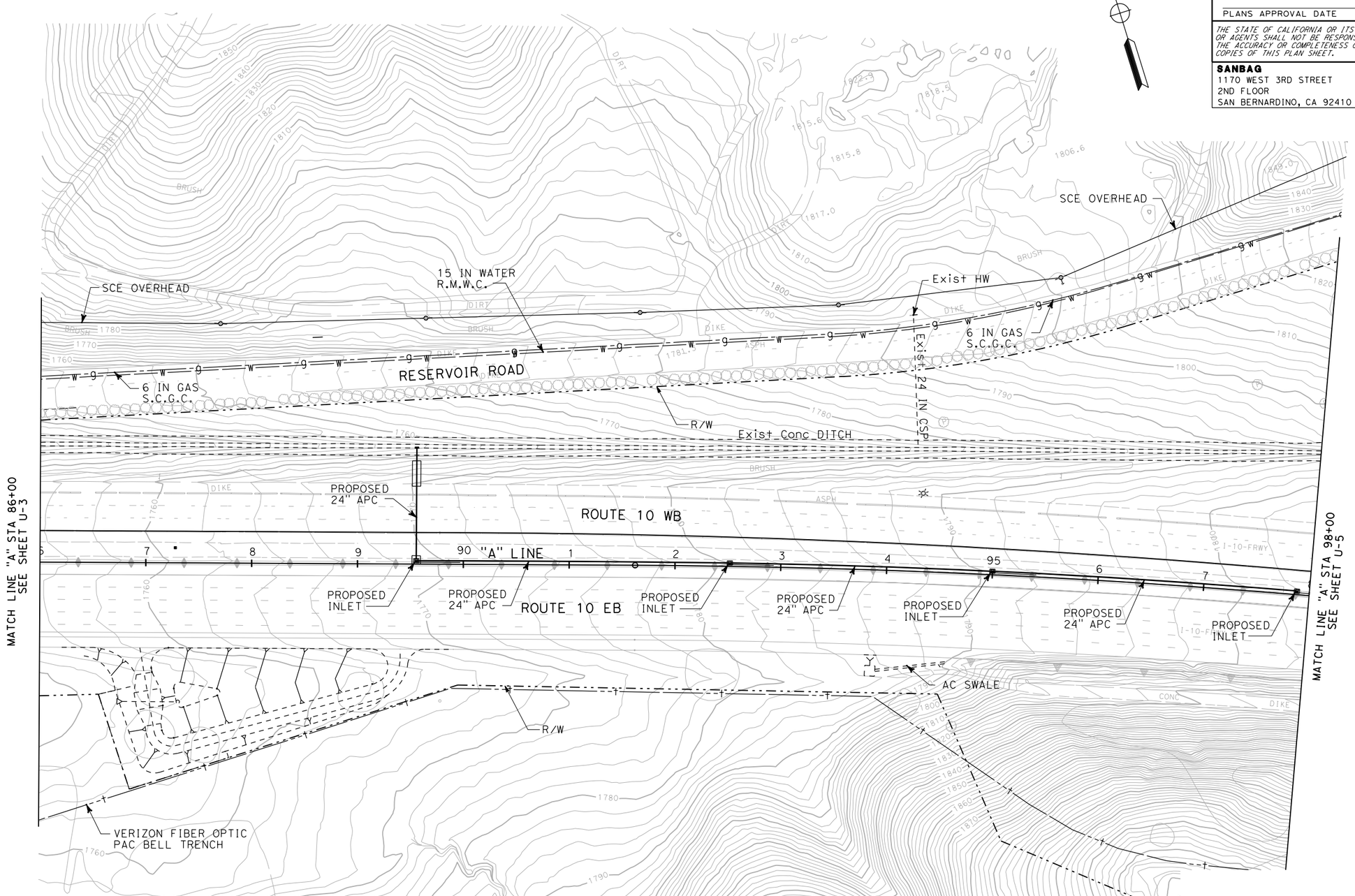

THIS PLAN ACCURATE FOR UTILITY INFORMATION ONLY

UTILITY PLAN

SCALE 1"=50'

U-4

STATE OF CALIFORNIA - DEPARTMENT OF TRANSPORTATION

Caltrans

CONSULTANT FUNCTIONAL SUPERVISOR: ED KOUZI

CALCULATED-DESIGNED BY: JASON SMITH

CHECKED BY: ED KOUZI

REVISED BY

DATE REVISED

LAST REVISION 00-00-00

DATE PLOTTED => 7/1/2009
TIME PLOTTED => 10:04:24 AM

RELATIVE BORDER SCALE IS IN INCHES 0 1 2 3

USERNAME => SmithJH
DGN FILE => ...\0f150ka004.dgn

CU 08220

EA 0F1500

Dist	COUNTY	ROUTE	POST MILES TOTAL PROJECT	SHEET No.	TOTAL SHEETS
8	SBd	10	33.3/R36.9	XXX	XXX

REGISTERED CIVIL ENGINEER DATE

PLANS APPROVAL DATE

REGISTERED PROFESSIONAL ENGINEER ARIEF NAFTALI No. 64286 Exp 6/30/09 CIVIL STATE OF CALIFORNIA

THE STATE OF CALIFORNIA OR ITS OFFICERS OR AGENTS SHALL NOT BE RESPONSIBLE FOR THE ACCURACY OR COMPLETENESS OF ELECTRONIC COPIES OF THIS PLAN SHEET.

SANBAG
1170 WEST 3RD STREET
2ND FLOOR
SAN BERNARDINO, CA 92410

AECOM
999 W. TOWN & COUNTRY RD
ORANGE, CA 92868

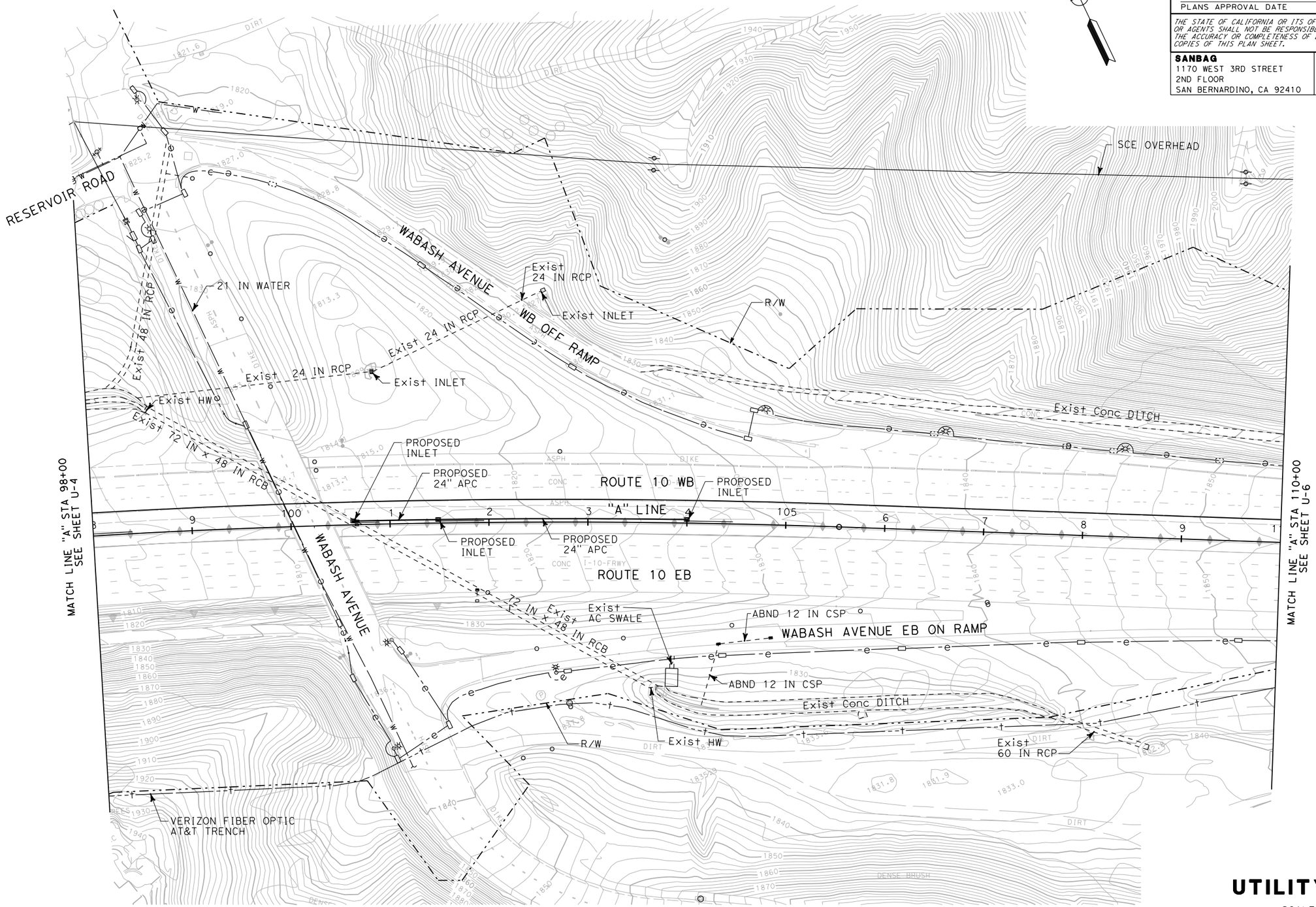

THIS PLAN ACCURATE FOR UTILITY INFORMATION ONLY

UTILITY PLAN

SCALE 1"=50'

U-5

STATE OF CALIFORNIA - DEPARTMENT OF TRANSPORTATION

Caltrans

CONSULTANT FUNCTIONAL SUPERVISOR: ED KOUZI

CALCULATED-DESIGNED BY: JASON SMITH

CHECKED BY: ED KOUZI

REVISED BY

DATE REVISED

LAST REVISION 00-00-00

DATE PLOTTED => 7/1/2009
TIME PLOTTED => 10:04:30 AM

RELATIVE BORDER SCALE IS IN INCHES 0 1 2 3

USERNAME => SmithJH
DGN FILE => ...\0f150ka005.dgn

CU 08220

EA 0F1500

Dist	COUNTY	ROUTE	POST MILES TOTAL PROJECT	SHEET No.	TOTAL SHEETS
8	SBd	10	33.3/R36.9	XXX	XXX

REGISTERED CIVIL ENGINEER DATE

PLANS APPROVAL DATE

REGISTERED PROFESSIONAL ENGINEER
ARIEF NAFTALI
No. 64286
Exp 6/30/09
CIVIL
STATE OF CALIFORNIA

THE STATE OF CALIFORNIA OR ITS OFFICERS OR AGENTS SHALL NOT BE RESPONSIBLE FOR THE ACCURACY OR COMPLETENESS OF ELECTRONIC COPIES OF THIS PLAN SHEET.

SANBAG
1170 WEST 3RD STREET
2ND FLOOR
SAN BERNARDINO, CA 92410

AECOM
999 W. TOWN & COUNTRY RD
ORANGE, CA 92868

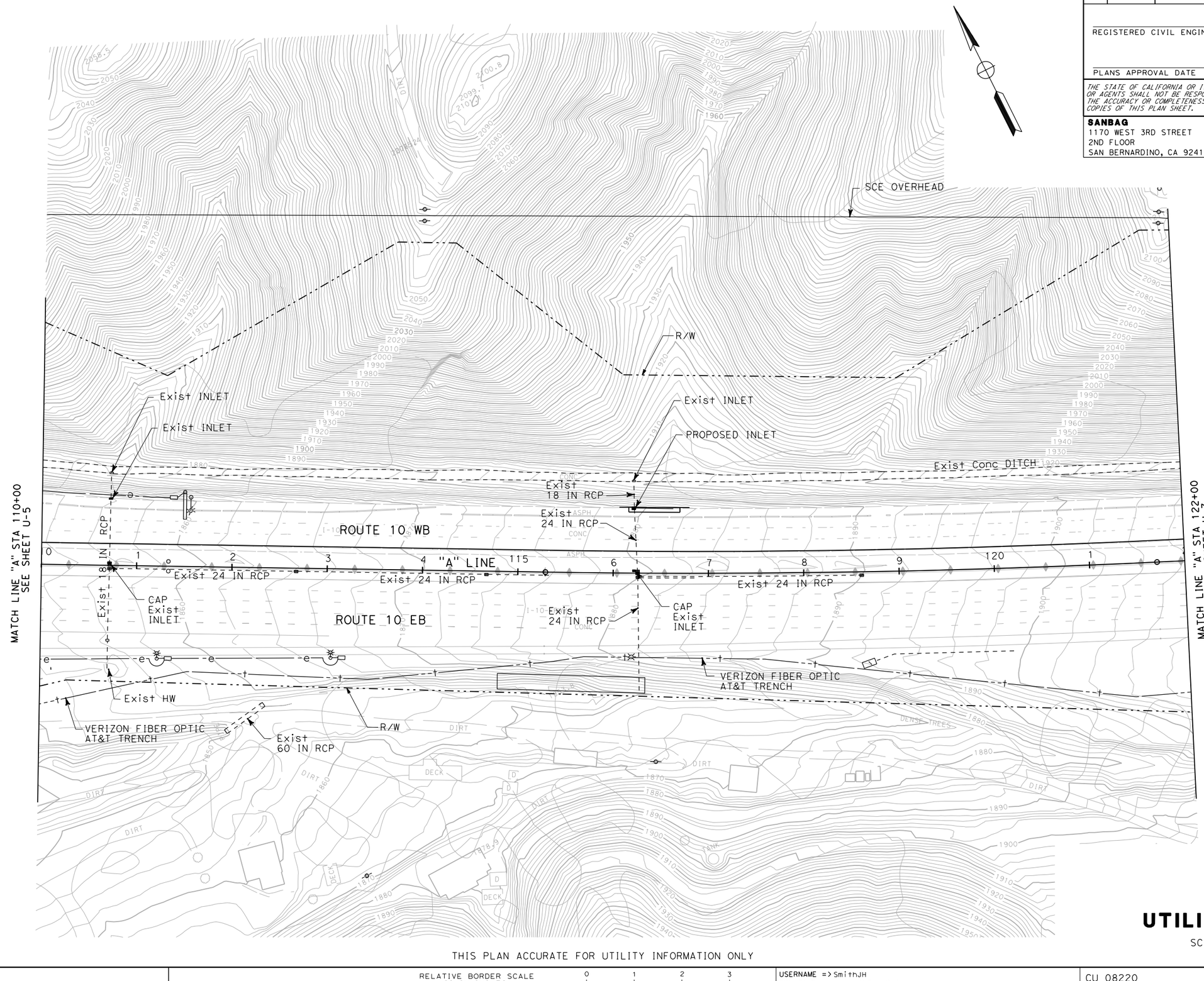

THIS PLAN ACCURATE FOR UTILITY INFORMATION ONLY

UTILITY PLAN

SCALE 1"=50'

U-6

REVISED BY	DATE REVISED
JASON SMITH	
ED KOUZI	

CALCULATED-DESIGNED BY
CHECKED BY

CONSULTANT FUNCTIONAL SUPERVISOR
ED KOUZI

STATE OF CALIFORNIA - DEPARTMENT OF TRANSPORTATION
Caltrans

LAST REVISION 00-00-00
DATE PLOTTED => 7/11/2009
TIME PLOTTED => 10:04:31 AM

RELATIVE BORDER SCALE IS IN INCHES 0 1 2 3

USERNAME => SmithJH
DGN FILE => ...\0f150ka006.dgn

CU 08220

EA 0F1500

Dist	COUNTY	ROUTE	POST MILES TOTAL PROJECT	SHEET No.	TOTAL SHEETS
8	SBd	10	33.3/R36.9	XXX	XXX

REGISTERED CIVIL ENGINEER DATE

PLANS APPROVAL DATE

REGISTERED PROFESSIONAL ENGINEER
ARIEF NAFTALI
No. 64286
Exp 6/30/09
CIVIL
STATE OF CALIFORNIA

THE STATE OF CALIFORNIA OR ITS OFFICERS OR AGENTS SHALL NOT BE RESPONSIBLE FOR THE ACCURACY OR COMPLETENESS OF ELECTRONIC COPIES OF THIS PLAN SHEET.

SANBAG
1170 WEST 3RD STREET
2ND FLOOR
SAN BERNARDINO, CA 92410

AECOM
999 W. TOWN & COUNTRY RD
ORANGE, CA 92868

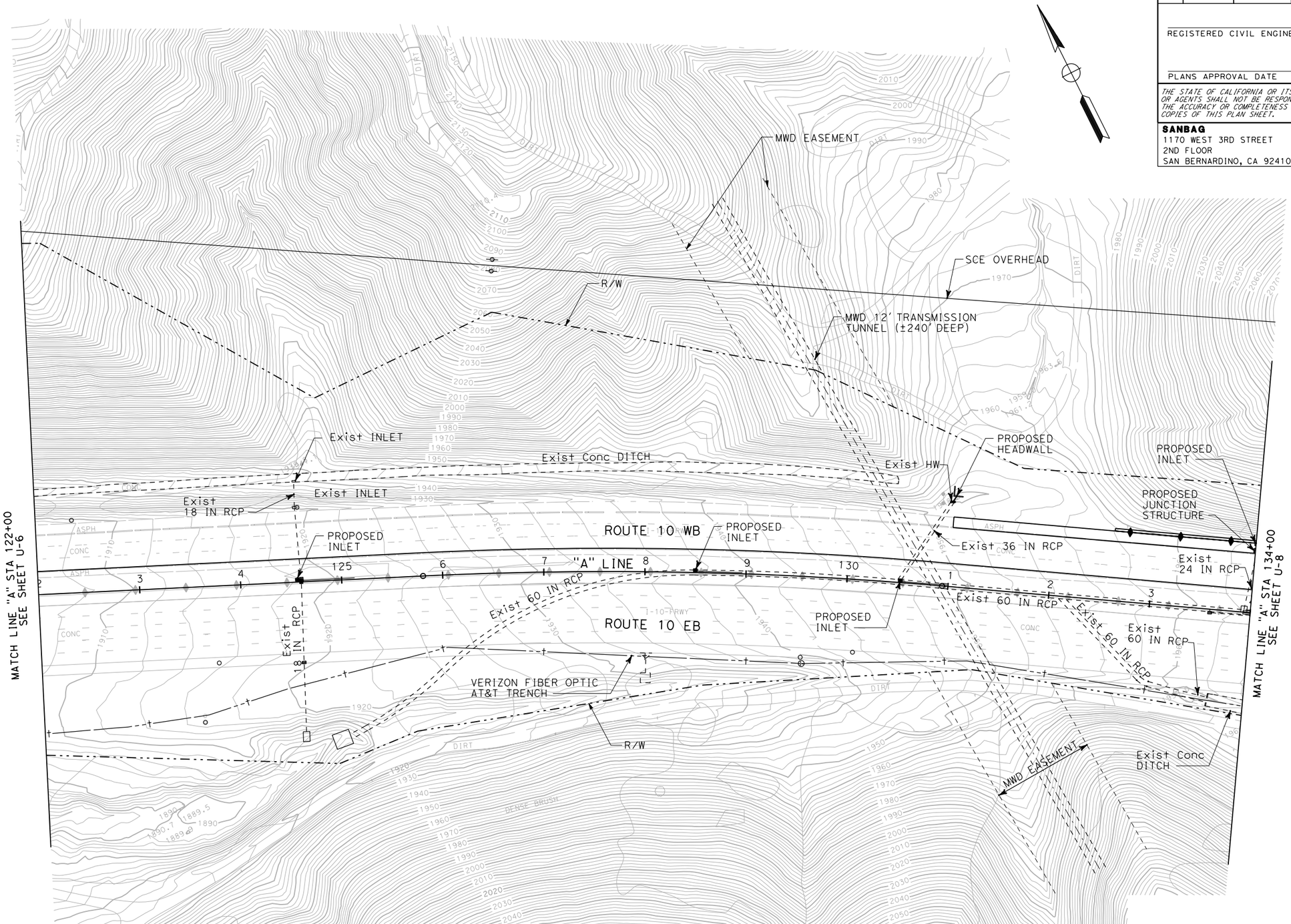

UTILITY PLAN

SCALE 1"=50'

U-7

THIS PLAN ACCURATE FOR UTILITY INFORMATION ONLY

STATE OF CALIFORNIA - DEPARTMENT OF TRANSPORTATION

Caltrans

CONSULTANT FUNCTIONAL SUPERVISOR: ED KOUZI

CALCULATED-DESIGNED BY: JASON SMITH

CHECKED BY: ED KOUZI

REVISED BY

DATE REVISED

LAST REVISION 00-00-00

DATE PLOTTED => 7/1/2009
TIME PLOTTED => 10:04:40 AM

RELATIVE BORDER SCALE IS IN INCHES 0 1 2 3

USERNAME => SmithJH
DGN FILE => ...\0f150ka007.dgn

CU 08220

EA 0F1500

Dist	COUNTY	ROUTE	POST MILES TOTAL PROJECT	SHEET No.	TOTAL SHEETS
8	SBd	10	33.3/R36.9	XXX	XXX

REGISTERED CIVIL ENGINEER DATE

PLANS APPROVAL DATE

REGISTERED PROFESSIONAL ENGINEER ARIEF NAFTALI No. 64286 Exp 6/30/09 CIVIL STATE OF CALIFORNIA

THE STATE OF CALIFORNIA OR ITS OFFICERS OR AGENTS SHALL NOT BE RESPONSIBLE FOR THE ACCURACY OR COMPLETENESS OF ELECTRONIC COPIES OF THIS PLAN SHEET.

SANBAG
1170 WEST 3RD STREET
2ND FLOOR
SAN BERNARDINO, CA 92410

AECOM
999 W. TOWN & COUNTRY RD
ORANGE, CA 92868

POTHOLE LOCATION TABLE

NO.	UTILITY	NORTHING	EASTING	ELEVATION OG (FT)	DEPTH TO UTILITY (FT)	NOTES
8C	6" GAS S.C.G.C.	1833827.64	6826503.05	2016.53	--	TOO DEEP TO LOCATE - LOCATOR CABLE(S) HAND HOLE
8D	6" GAS S.C.G.C.	1833846.23	6826505.62	2017.95	10.33	
8E	6" GAS S.C.G.C.	1833848.81	6826505.68	2018.41	7.33	
8F	VERIZON FIBER OPTIC	1833848.81	6826543.46	2012.29	2.83	DEPTH TO CONCRETE ENCASEMENT
8G	VERIZON FIBER OPTIC	1833815.87	6826549.64	2018.55	5.00	DEPTH TO CONCRETE ENCASEMENT
8H	VERIZON FIBER OPTIC	1833777.97	6826734.98	2028.60	3.00	4 - 4" DUCTS

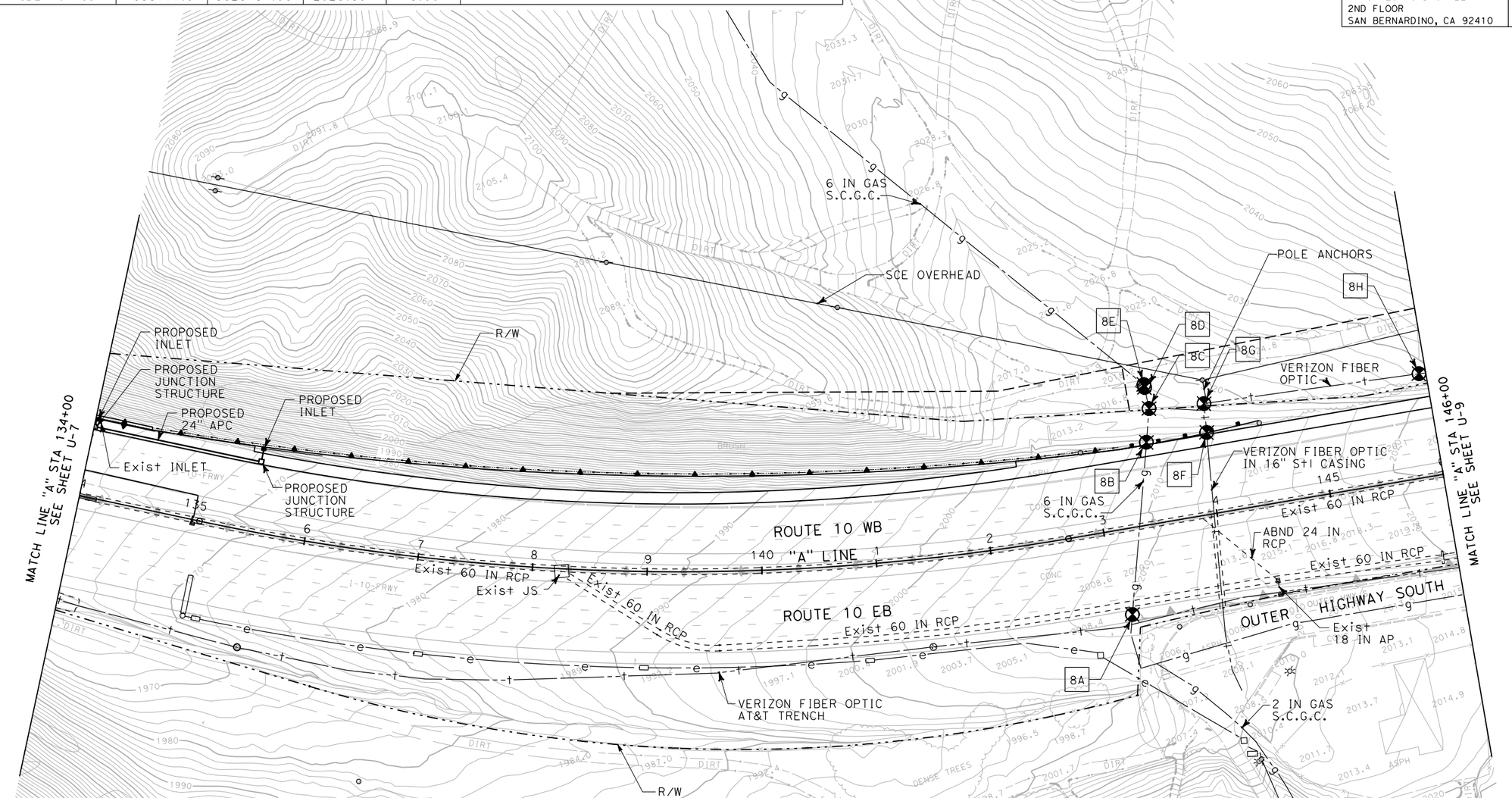

HISTORIC POTHOLE DATA TABLE

NO.	UTILITY	NORTHING	EASTING	ELEVATION OG (m)	DEPTH TO UTILITY (m)
8A	6" GAS S.C.G.C.	558901.740	2080699.919	612.627	2.795
8B	6" GAS S.C.G.C.	558943.619	2080718.632	612.402	1.661

HISTORIC POTHOLE INFORMATION FROM PRIOR PROJECT EA#4192U1 (EB TRUCK CLIMBING LANE)

THIS PLAN ACCURATE FOR UTILITY INFORMATION ONLY

UTILITY PLAN

SCALE 1"=50'

U-8

STATE OF CALIFORNIA - DEPARTMENT OF TRANSPORTATION

Caltrans

CONSULTANT FUNCTIONAL SUPERVISOR: ED KOUZI

CALCULATED-DESIGNED BY: JASON SMITH

CHECKED BY: ED KOUZI

REVISED BY

DATE REVISED

LAST REVISION 00-00-00

DATE PLOTTED => 7/1/2009
TIME PLOTTED => 10:04:47 AM

RELATIVE BORDER SCALE IS IN INCHES 0 1 2 3

USERNAME => SmithJH
DGN FILE => ...\0f150ka008.dgn

CU 08220

EA 0F1500

Dist	COUNTY	ROUTE	POST MILES TOTAL PROJECT	SHEET No.	TOTAL SHEETS
8	SBd	10	33.3/R36.9	XXX	XXX

REGISTERED CIVIL ENGINEER DATE

PLANS APPROVAL DATE

REGISTERED PROFESSIONAL ENGINEER ARIEF NAFTALI No. 64286 Exp 6/30/09 CIVIL STATE OF CALIFORNIA

THE STATE OF CALIFORNIA OR ITS OFFICERS OR AGENTS SHALL NOT BE RESPONSIBLE FOR THE ACCURACY OR COMPLETENESS OF ELECTRONIC COPIES OF THIS PLAN SHEET.

SANBAG
1170 WEST 3RD STREET
2ND FLOOR
SAN BERNARDINO, CA 92410

AECOM
999 W. TOWN & COUNTRY RD
ORANGE, CA 92868

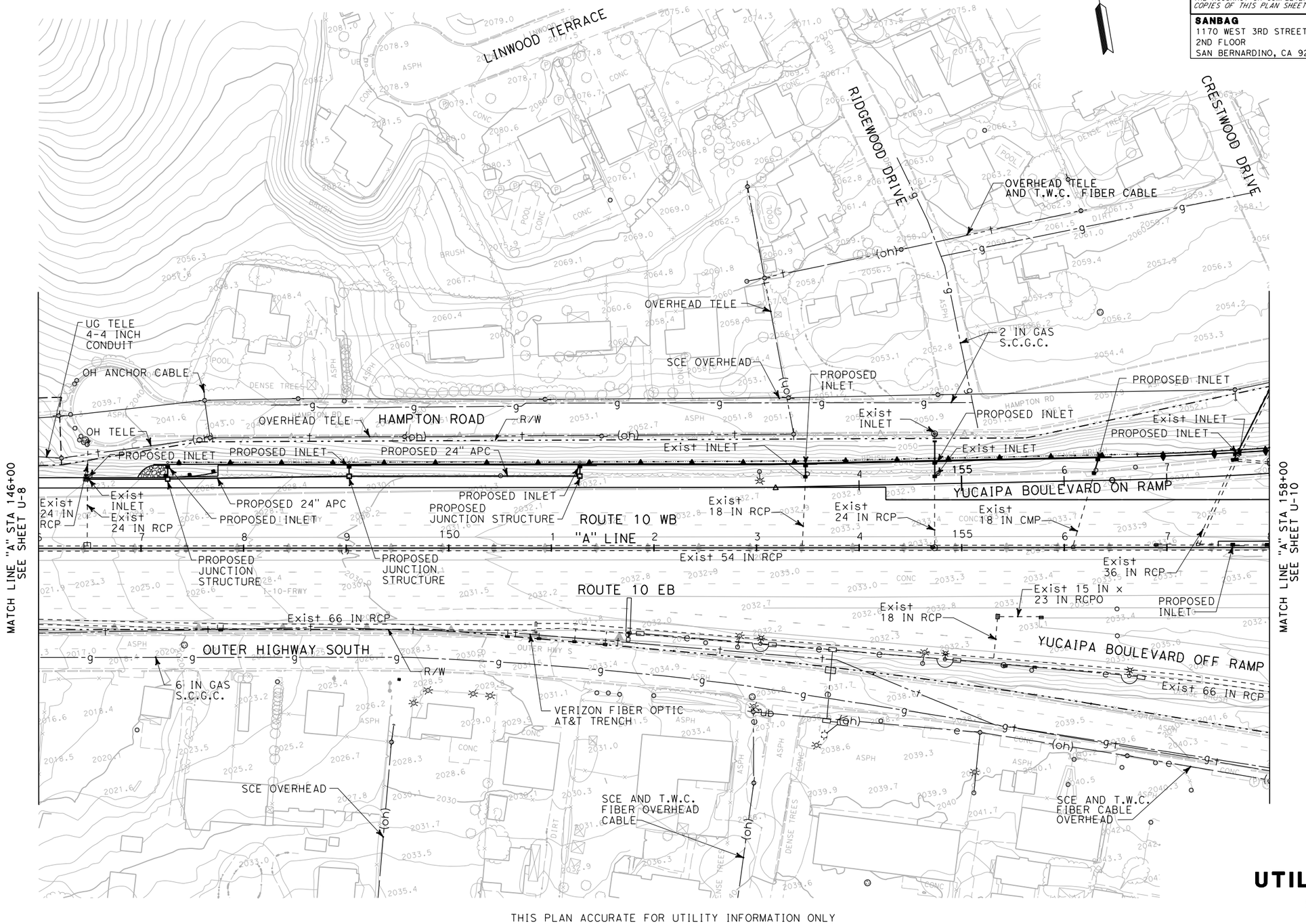

UTILITY PLAN

SCALE 1"=50'

U-9

THIS PLAN ACCURATE FOR UTILITY INFORMATION ONLY

STATE OF CALIFORNIA - DEPARTMENT OF TRANSPORTATION

Caltrans

CONSULTANT FUNCTIONAL SUPERVISOR: ED KOUZI

CALCULATED-DESIGNED BY: JASON SMITH

CHECKED BY: ED KOUZI

REVISED BY

DATE REVISED

LAST REVISION 00-00-00

DATE PLOTTED => 7/1/2009
TIME PLOTTED => 10:04:52 AM

RELATIVE BORDER SCALE IS IN INCHES 0 1 2 3

USERNAME => SmithJH
DGN FILE => ...\0f150ka009.dgn

CU 08220

EA 0F1500

Dist	COUNTY	ROUTE	POST MILES TOTAL PROJECT	SHEET No.	TOTAL SHEETS
8	SBd	10	33.3/R36.9	XXX	XXX

REGISTERED CIVIL ENGINEER DATE

PLANS APPROVAL DATE

REGISTERED PROFESSIONAL ENGINEER ARIEF NAFTALI No. 64286 Exp 6/30/09 CIVIL STATE OF CALIFORNIA

THE STATE OF CALIFORNIA OR ITS OFFICERS OR AGENTS SHALL NOT BE RESPONSIBLE FOR THE ACCURACY OR COMPLETENESS OF ELECTRONIC COPIES OF THIS PLAN SHEET.

SANBAG
1170 WEST 3RD STREET
2ND FLOOR
SAN BERNARDINO, CA 92410

AECOM
999 W. TOWN & COUNTRY RD
ORANGE, CA 92868

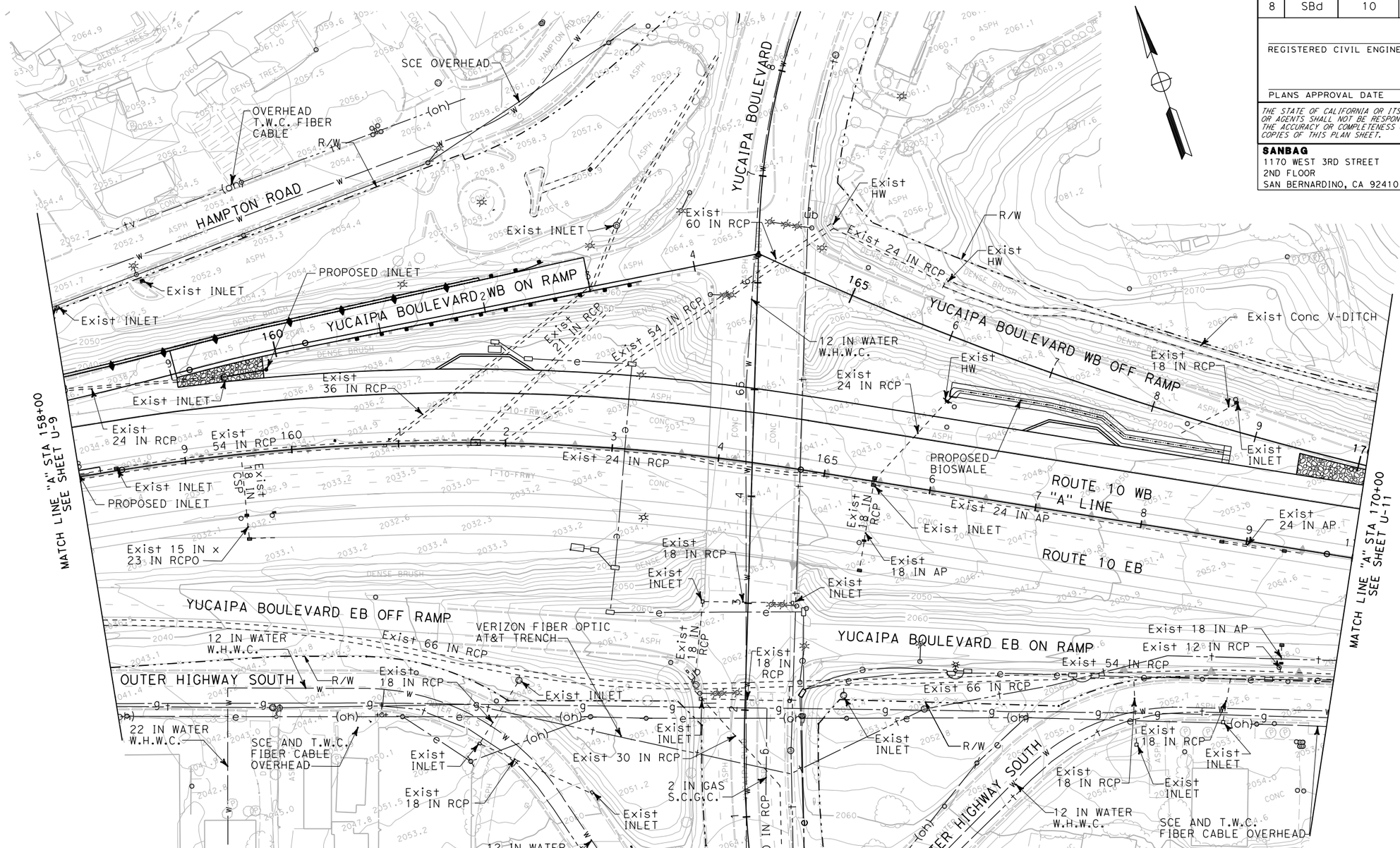

UTILITY PLAN

SCALE 1"=50'

U-10

THIS PLAN ACCURATE FOR UTILITY INFORMATION ONLY

STATE OF CALIFORNIA - DEPARTMENT OF TRANSPORTATION

Caltrans

CONSULTANT FUNCTIONAL SUPERVISOR: ED KOUZI

CALCULATED-DESIGNED BY: JASON SMITH

CHECKED BY: ED KOUZI

REVISED BY

DATE REVISED

LAST REVISION 00-00-00

DATE PLOTTED => 7/1/2009
TIME PLOTTED => 10:04:57 AM

RELATIVE BORDER SCALE IS IN INCHES 0 1 2 3

USERNAME => SmithJH
DGN FILE => ...\0f150ka010.dgn

CU 08220

EA 0F1500

Dist	COUNTY	ROUTE	POST MILES TOTAL PROJECT	SHEET No.	TOTAL SHEETS
8	SBd	10	33.3/R36.9	XXX	XXX

REGISTERED CIVIL ENGINEER DATE

PLANS APPROVAL DATE

REGISTERED PROFESSIONAL ENGINEER ARIEF NAFTALI No. 64286 Exp 6/30/09 CIVIL STATE OF CALIFORNIA

THE STATE OF CALIFORNIA OR ITS OFFICERS OR AGENTS SHALL NOT BE RESPONSIBLE FOR THE ACCURACY OR COMPLETENESS OF ELECTRONIC COPIES OF THIS PLAN SHEET.

SANBAG
1170 WEST 3RD STREET
2ND FLOOR
SAN BERNARDINO, CA 92410

AECOM
999 W. TOWN & COUNTRY RD
ORANGE, CA 92868

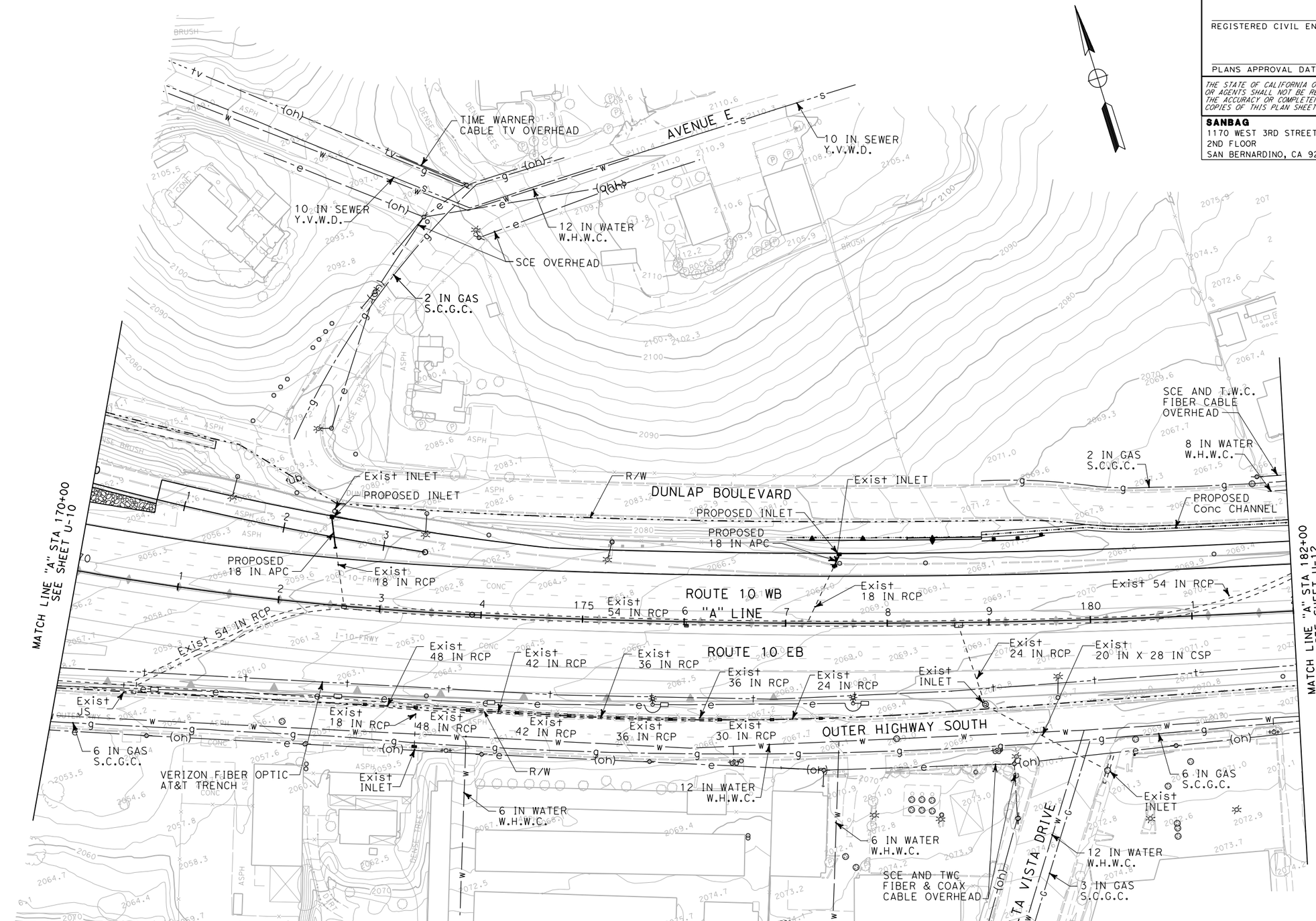

UTILITY PLAN

SCALE 1"=50'

U-11

THIS PLAN ACCURATE FOR UTILITY INFORMATION ONLY

CALCULATED-DESIGNED BY	JASON SMITH
CHECKED BY	ED KOUZI
REVISED BY	
DATE REVISED	
CONSULTANT FUNCTIONAL SUPERVISOR	ED KOUZI

STATE OF CALIFORNIA - DEPARTMENT OF TRANSPORTATION

Caltrans

LAST REVISION 00-00-00

DATE PLOTTED => 7/1/2009
TIME PLOTTED => 10:05:01 AM

RELATIVE BORDER SCALE IS IN INCHES 0 1 2 3

USERNAME => SmithJH
DGN FILE => ...\0f150ka011.dgn

CU 08220

EA 0F1500

Dist	COUNTY	ROUTE	POST MILES TOTAL PROJECT	SHEET No.	TOTAL SHEETS
8	SBd	10	33.3/R36.9	XXX	XXX

REGISTERED CIVIL ENGINEER DATE

PLANS APPROVAL DATE

REGISTERED PROFESSIONAL ENGINEER ARIEF NAFTALI No. 64286 Exp 6/30/09 CIVIL STATE OF CALIFORNIA

THE STATE OF CALIFORNIA OR ITS OFFICERS OR AGENTS SHALL NOT BE RESPONSIBLE FOR THE ACCURACY OR COMPLETENESS OF ELECTRONIC COPIES OF THIS PLAN SHEET.

SANBAG
1170 WEST 3RD STREET
2ND FLOOR
SAN BERNARDINO, CA 92410

AECOM
999 W. TOWN & COUNTRY RD
ORANGE, CA 92868

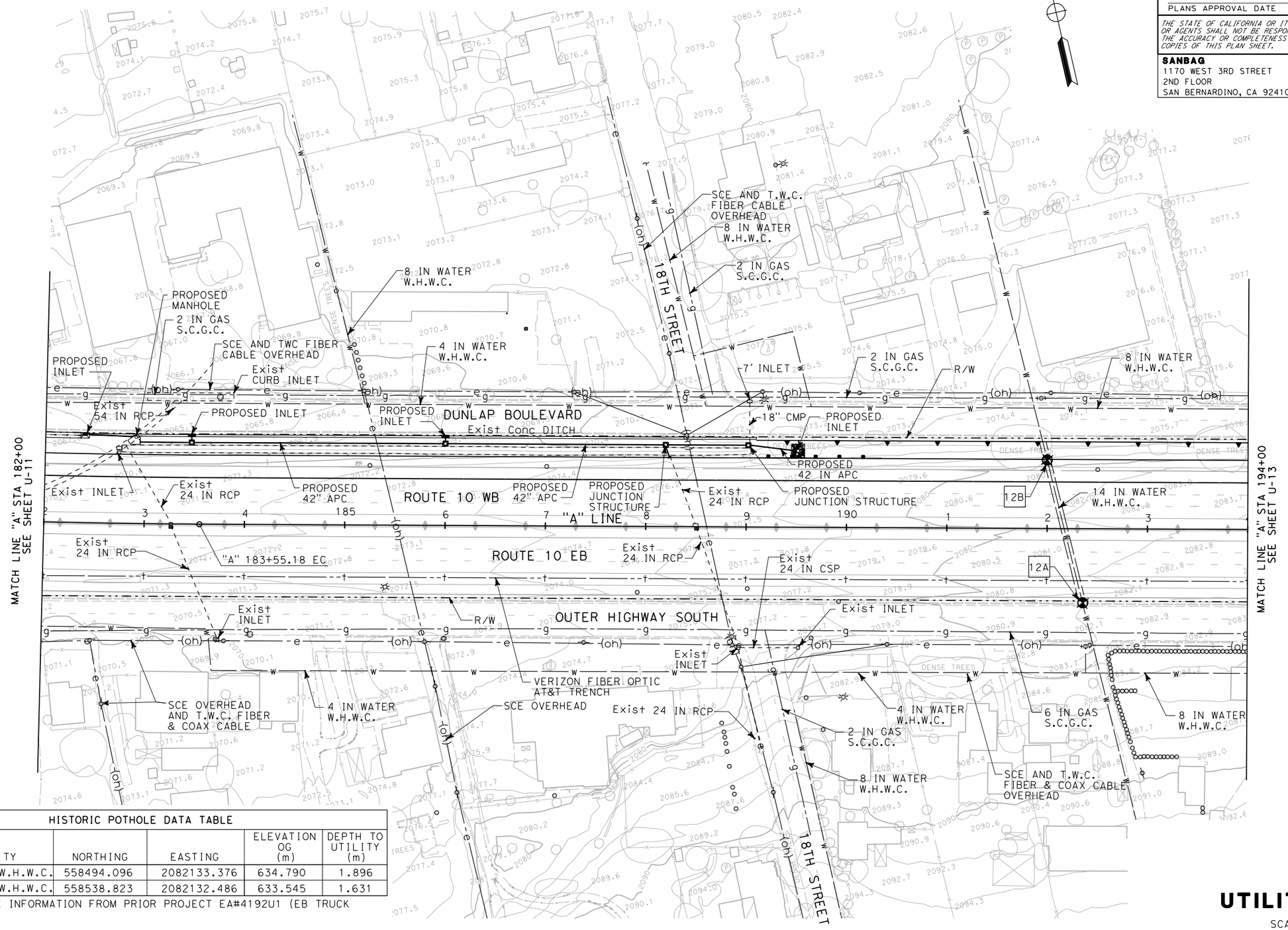

HISTORIC POTHOLE DATA TABLE

NO.	UTILITY	NORTHING	EASTING	ELEVATION OG (m)	DEPTH TO UTILITY (m)
12A	14" WATER W.H.W.C.	558494.096	2082133.376	634.790	1.896
12B	14" WATER W.H.W.C.	558538.823	2082132.486	633.545	1.631

HISTORIC POTHOLE INFORMATION FROM PRIOR PROJECT EA#4192U1 (EB TRUCK CLIMBING LANE)

THIS PLAN ACCURATE FOR UTILITY INFORMATION ONLY

UTILITY PLAN

SCALE 1"=50'

U-12

REVISED BY	DATE REVISED
JASON SMITH	ED KOUZI

CALCULATED-DESIGNED BY	CHECKED BY
ED KOUZI	

CONSULTANT FUNCTIONAL SUPERVISOR

STATE OF CALIFORNIA - DEPARTMENT OF TRANSPORTATION

Caltrans

LAST REVISION 00-00-00 | DATE PLOTTED => 7/1/2009 | TIME PLOTTED => 10:05:05 AM

RELATIVE BORDER SCALE IS IN INCHES 0 1 2 3

USERNAME => SmithJH
DGN FILE => ...\0f150ka012.dgn

CU 08220

EA 0F1500

Dist	COUNTY	ROUTE	POST MILES TOTAL PROJECT	SHEET No.	TOTAL SHEETS
8	SBd	10	33.3/R36.9	XXX	XXX

REGISTERED CIVIL ENGINEER DATE

PLANS APPROVAL DATE

REGISTERED PROFESSIONAL ENGINEER ARIEF NAFTALI No. 64286 Exp 6/30/09 CIVIL STATE OF CALIFORNIA

THE STATE OF CALIFORNIA OR ITS OFFICERS OR AGENTS SHALL NOT BE RESPONSIBLE FOR THE ACCURACY OR COMPLETENESS OF ELECTRONIC COPIES OF THIS PLAN SHEET.

SANBAG
1170 WEST 3RD STREET
2ND FLOOR
SAN BERNARDINO, CA 92410

AECOM
999 W. TOWN & COUNTRY RD
ORANGE, CA 92868

HISTORIC POTHOLE DATA TABLE

NO.	UTILITY	NORTHING	EASTING	ELEVATION OG (m)	DEPTH TO UTILITY (m)
13A	6" GAS S.C.G.C.	558433.351	2082384.123	635.645	1.811
13B	6" GAS S.C.G.C.	558475.658	2082413.163	633.958	1.207
13C	AT&T FIBER OPTIC	558412.993	2082433.835	636.176	0.789
13D	AT&T FIBER OPTIC	558406.958	2082458.969	635.808	1.676

HISTORIC POTHOLE INFORMATION FROM PRIOR PROJECT EA#4192U1 (EB TRUCK CLIMBING LANE)

THIS PLAN ACCURATE FOR UTILITY INFORMATION ONLY

UTILITY PLAN

SCALE 1"=50'

U-13

STATE OF CALIFORNIA - DEPARTMENT OF TRANSPORTATION

Caltrans

CONSULTANT FUNCTIONAL SUPERVISOR: ED KOUZI

CALCULATED-DESIGNED BY: JASON SMITH

CHECKED BY: ED KOUZI

REVISED BY

DATE REVISED

LAST REVISION 00-00-00

DATE PLOTTED => 7/1/2009
TIME PLOTTED => 10:05:12 AM

RELATIVE BORDER SCALE IS IN INCHES 0 1 2 3

USERNAME => SmithJH
DGN FILE => ...\0f150ka013.dgn

CU 08220

EA 0F1500

Dist	COUNTY	ROUTE	POST MILES TOTAL PROJECT	SHEET No.	TOTAL SHEETS
8	SBd	10	33.3/R36.9	XXX	XXX

REGISTERED CIVIL ENGINEER DATE

PLANS APPROVAL DATE

REGISTERED PROFESSIONAL ENGINEER ARIEF NAFTALI No. 64286 Exp 6/30/09 CIVIL STATE OF CALIFORNIA

THE STATE OF CALIFORNIA OR ITS OFFICERS OR AGENTS SHALL NOT BE RESPONSIBLE FOR THE ACCURACY OR COMPLETENESS OF ELECTRONIC COPIES OF THIS PLAN SHEET.

SANBAG
1170 WEST 3RD STREET
2ND FLOOR
SAN BERNARDINO, CA 92410

AECOM
999 W. TOWN & COUNTRY RD
ORANGE, CA 92868

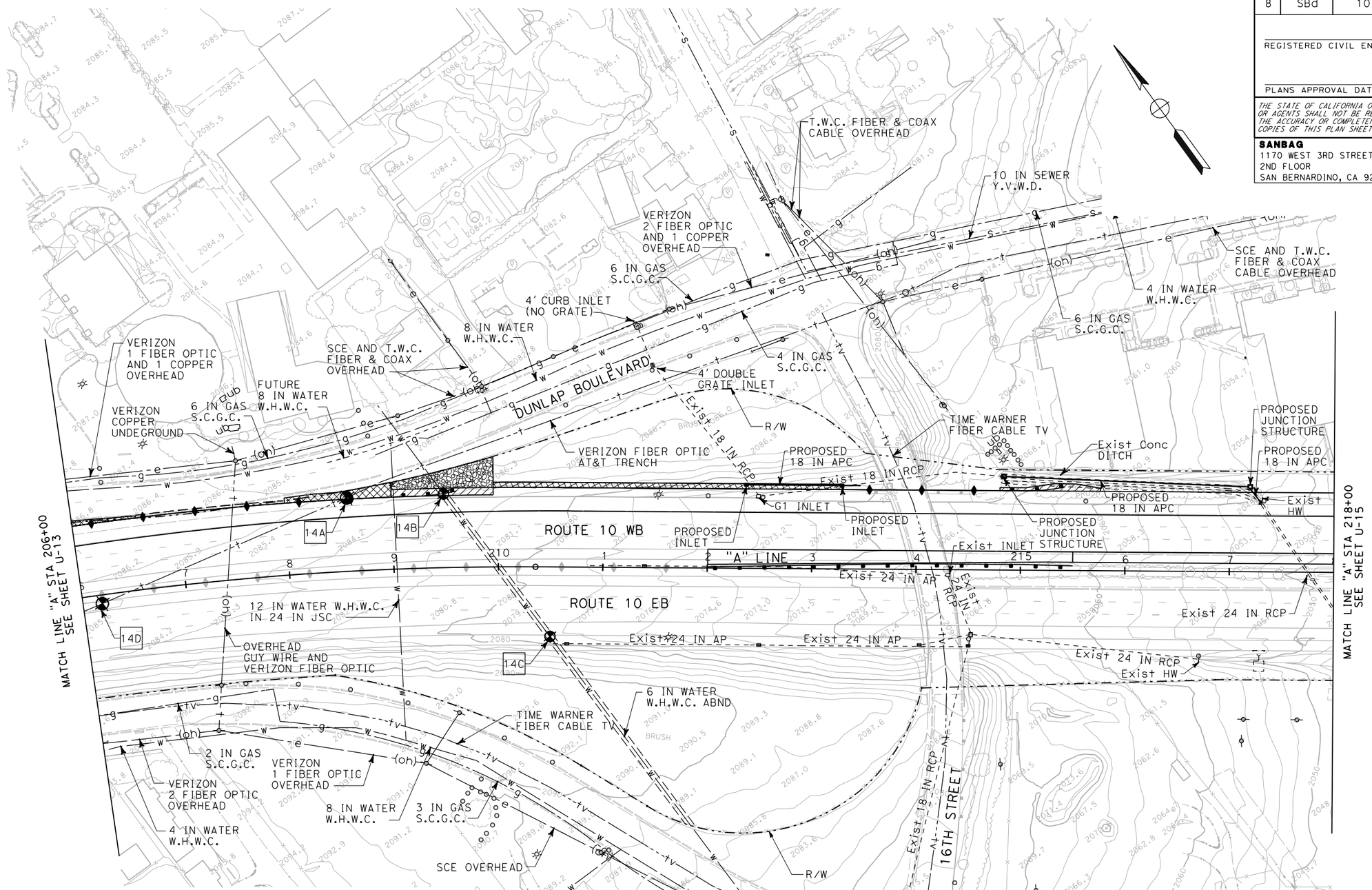

HISTORIC POTHOLE DATA TABLE

NO.	UTILITY	NORTHING	EASTING	ELEVATION OG (m)	DEPTH TO UTILITY (m)
14A	AT&T FIBER OPTIC	558371.477	2082613.668	635.669	1.146
14B	6" WATER W.H.W.C.	558355.687	2082637.211	635.337	1.451
14C	6" WATER W.H.W.C.	558303.831	2082637.808	633.686	0.475
14D	AT&T FIBER OPTIC	558388.593	2082537.913	636.268	2.070

HISTORIC POTHOLE INFORMATION FROM PRIOR PROJECT EA#4192U1 (EB TRUCK CLIMBING LANE)

THIS PLAN ACCURATE FOR UTILITY INFORMATION ONLY

UTILITY PLAN

SCALE 1"=50'

U-14

STATE OF CALIFORNIA - DEPARTMENT OF TRANSPORTATION

Caltrans

CONSULTANT FUNCTIONAL SUPERVISOR: ED KOUZI

CALCULATED-DESIGNED BY: JASON SMITH

CHECKED BY: ED KOUZI

REVISED BY

DATE REVISED

LAST REVISION 00-00-00

DATE PLOTTED => 7/1/2009
TIME PLOTTED => 10:05:16 AM

RELATIVE BORDER SCALE IS IN INCHES 0 1 2 3

USERNAME => SmithJH
DGN FILE => ...\0f150ka014.dgn

CU 08220

EA 0F1500

Dist	COUNTY	ROUTE	POST MILES TOTAL PROJECT	SHEET No.	TOTAL SHEETS
8	SBd	10	33.3/R36.9	XXX	XXX

REGISTERED CIVIL ENGINEER DATE

PLANS APPROVAL DATE

REGISTERED PROFESSIONAL ENGINEER ARIEF NAFTALI No. 64286 Exp 6/30/09 CIVIL STATE OF CALIFORNIA

THE STATE OF CALIFORNIA OR ITS OFFICERS OR AGENTS SHALL NOT BE RESPONSIBLE FOR THE ACCURACY OR COMPLETENESS OF ELECTRONIC COPIES OF THIS PLAN SHEET.

SANBAG
1170 WEST 3RD STREET
2ND FLOOR
SAN BERNARDINO, CA 92410

AECOM
999 W. TOWN & COUNTRY RD
ORANGE, CA 92868

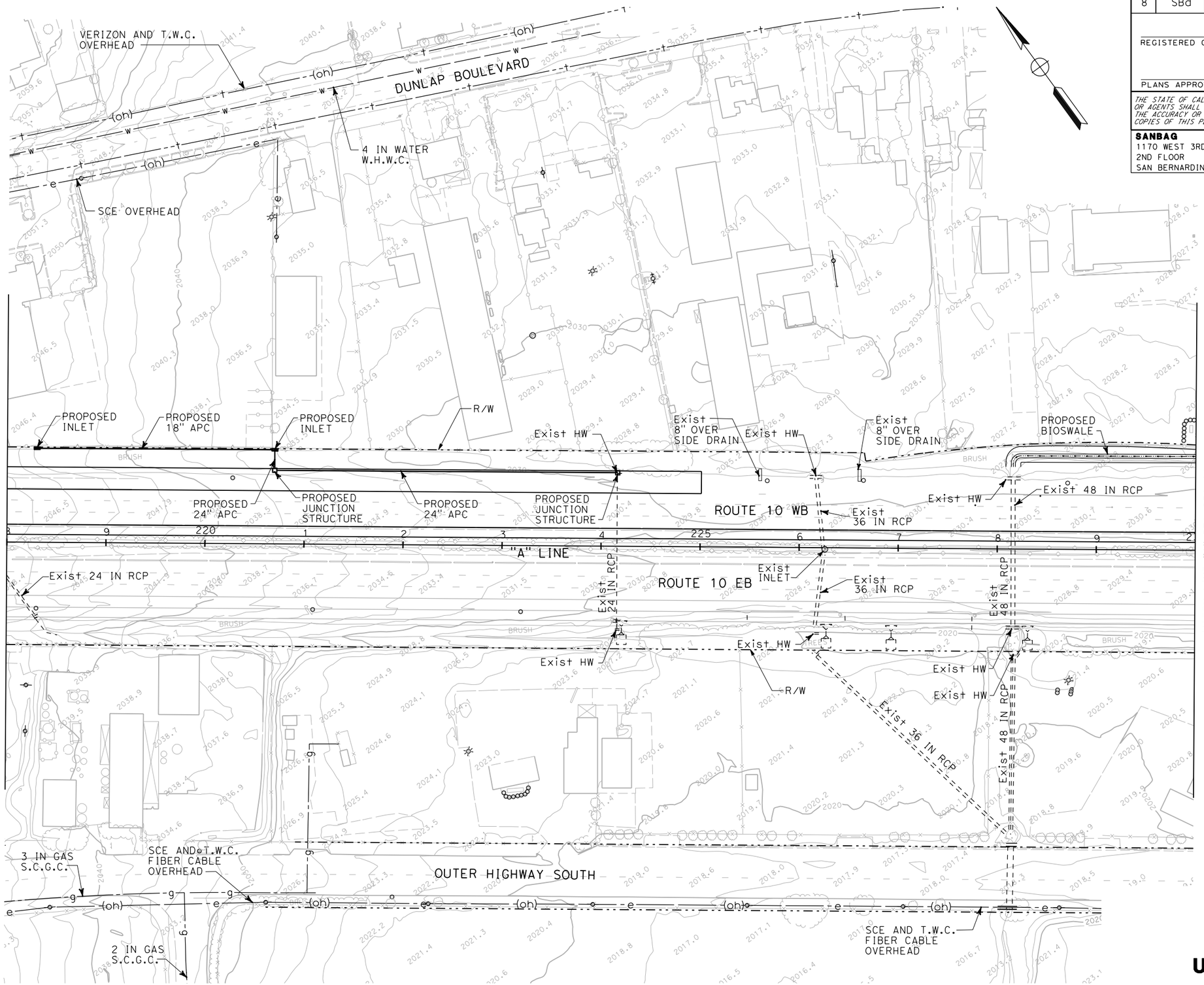

UTILITY PLAN

SCALE 1"=50'

U-15

THIS PLAN ACCURATE FOR UTILITY INFORMATION ONLY

STATE OF CALIFORNIA - DEPARTMENT OF TRANSPORTATION

Caltrans

CONSULTANT FUNCTIONAL SUPERVISOR: ED KOUZI

CALCULATED-DESIGNED BY: JASON SMITH

CHECKED BY: ED KOUZI

REVISED BY

DATE REVISED

LAST REVISION 00-00-00

DATE PLOTTED => 7/1/2009
TIME PLOTTED => 10:05:19 AM

RELATIVE BORDER SCALE IS IN INCHES 0 1 2 3

USERNAME => SmithJH
DGN FILE => ...\0f150ka015.dgn

CU 08220

EA 0F1500

Dist	COUNTY	ROUTE	POST MILES TOTAL PROJECT	SHEET No.	TOTAL SHEETS
8	SBd	10	33.3/R36.9	XXX	XXX

REGISTERED CIVIL ENGINEER DATE

PLANS APPROVAL DATE

REGISTERED PROFESSIONAL ENGINEER ARIEF NAFTALI No. 64286 Exp 6/30/09 CIVIL STATE OF CALIFORNIA

THE STATE OF CALIFORNIA OR ITS OFFICERS OR AGENTS SHALL NOT BE RESPONSIBLE FOR THE ACCURACY OR COMPLETENESS OF ELECTRONIC COPIES OF THIS PLAN SHEET.

SANBAG
1170 WEST 3RD STREET
2ND FLOOR
SAN BERNARDINO, CA 92410

AECOM
999 W. TOWN & COUNTRY RD
ORANGE, CA 92868

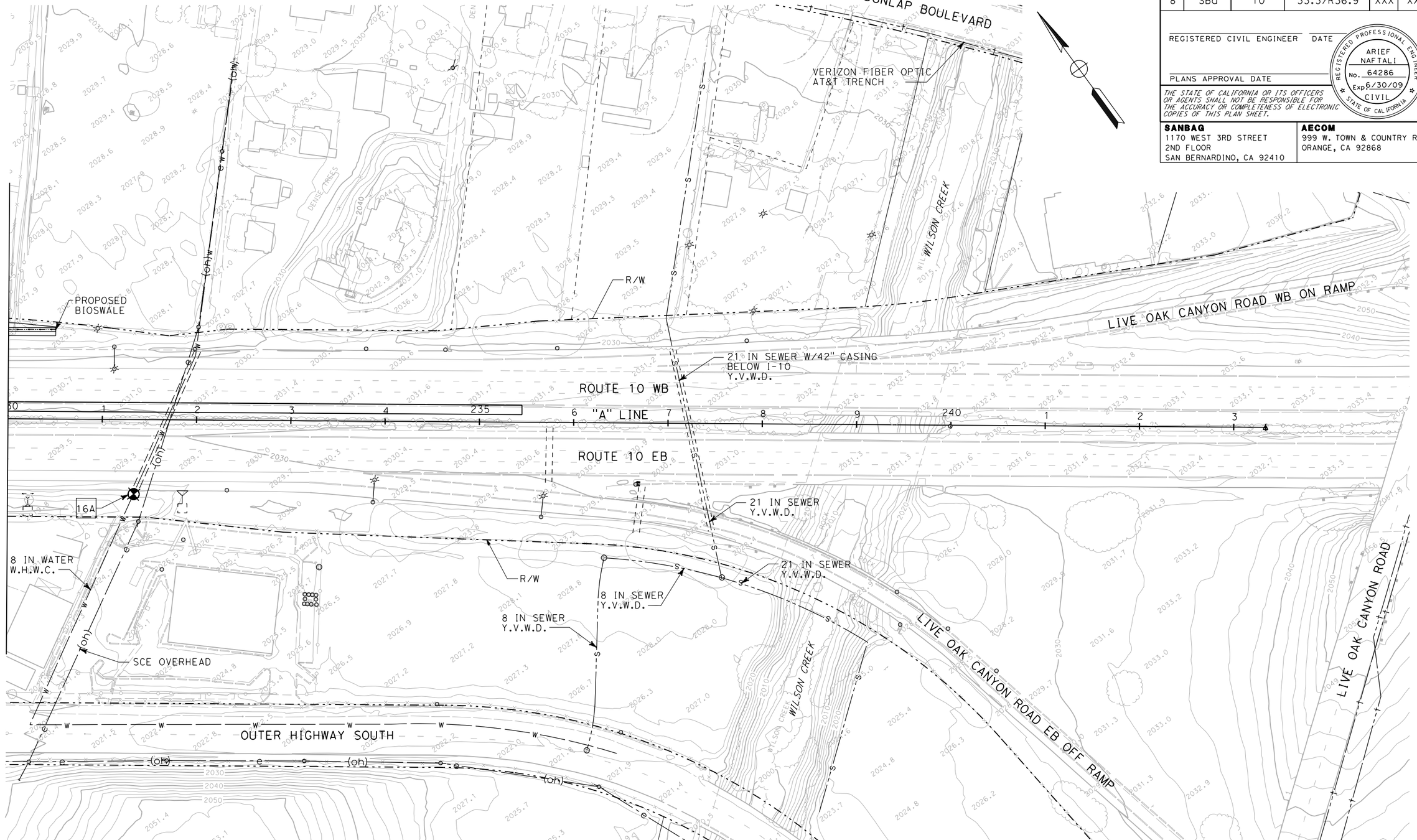

HISTORIC POTHOLE DATA TABLE					
NO.	UTILITY	NORTHING	EASTING	ELEVATION OG (m)	DEPTH TO UTILITY (m)
17A	8" WATER W.H.W.C.	557922.628	2083145.887	617.125	1.057

HISTORIC POTHOLE INFORMATION FROM PRIOR PROJECT EA#4192U1 (EB TRUCK CLIMBING LANE)

THIS PLAN ACCURATE FOR UTILITY INFORMATION ONLY

UTILITY PLAN

SCALE 1"=50'

U-16

STATE OF CALIFORNIA - DEPARTMENT OF TRANSPORTATION

Caltrans

CONSULTANT FUNCTIONAL SUPERVISOR: ED KOUZI

CALCULATED-DESIGNED BY: JASON SMITH

CHECKED BY: ED KOUZI

REVISED BY

DATE REVISED

LAST REVISION 00-00-00

DATE PLOTTED => 7/1/2009

TIME PLOTTED => 10:05:23 AM

RELATIVE BORDER SCALE IS IN INCHES 0 1 2 3

USERNAME => SmithJH

DGN FILE => ...\0f150ka016.dgn

CU 08220

EA 0F1500

Dist	COUNTY	ROUTE	POST MILES TOTAL PROJECT	SHEET No.	TOTAL SHEETS
8	SBd	10	33.3/R36.9	XXX	XXX

REGISTERED CIVIL ENGINEER DATE

PLANS APPROVAL DATE

REGISTERED PROFESSIONAL ENGINEER No. Exp. CIVIL STATE OF CALIFORNIA

THE STATE OF CALIFORNIA OR ITS OFFICERS OR AGENTS SHALL NOT BE RESPONSIBLE FOR THE ACCURACY OR COMPLETENESS OF ELECTRONIC COPIES OF THIS PLAN SHEET.

SANBAG
1170 WEST 3RD STREET
2ND FLOOR
SAN BERNARDINO, CA 92410

AECOM
999 W. TOWN & COUNTRY RD
ORANGE, CA 92868

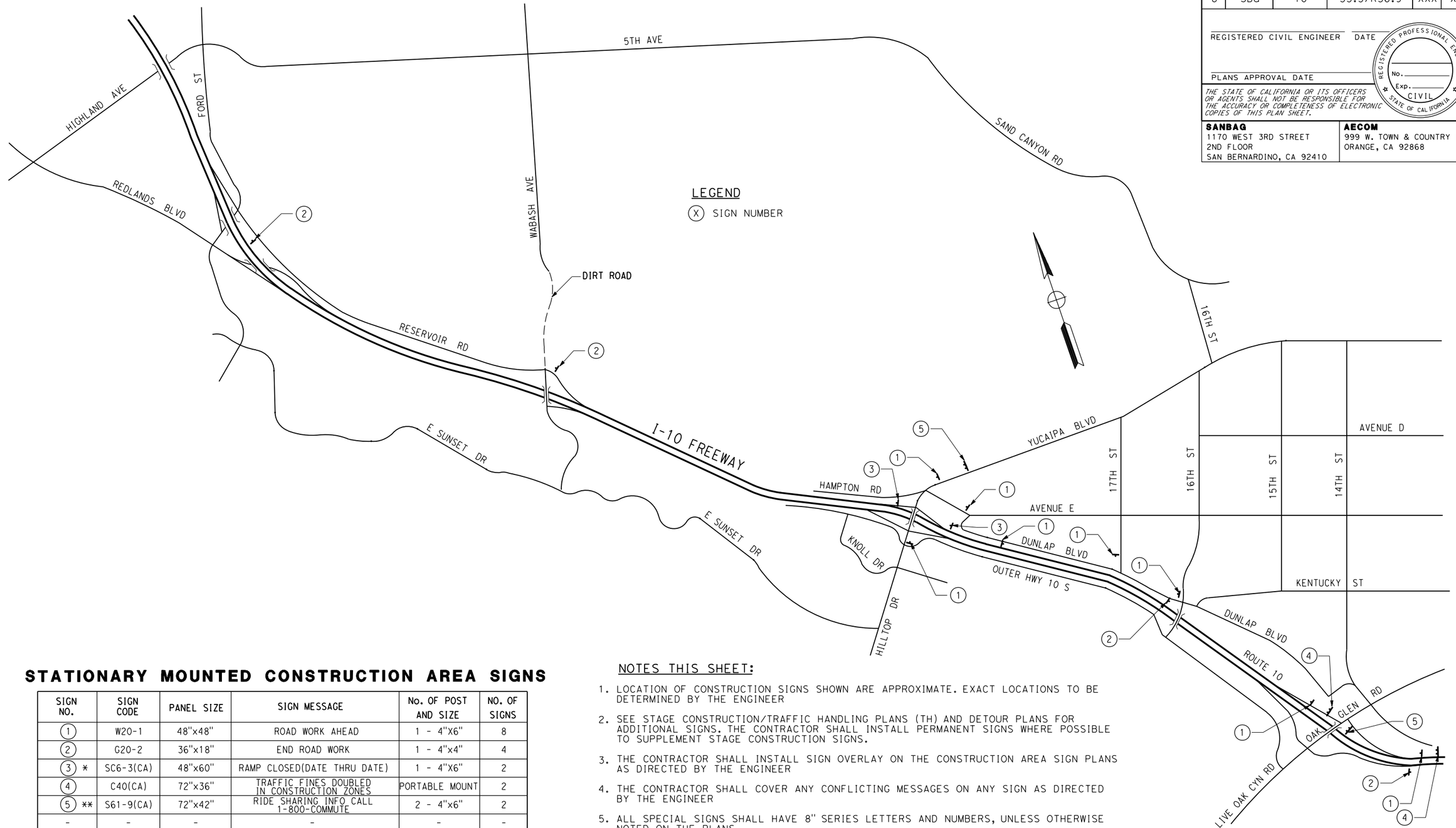

STATIONARY MOUNTED CONSTRUCTION AREA SIGNS

SIGN NO.	SIGN CODE	PANEL SIZE	SIGN MESSAGE	No. OF POST AND SIZE	NO. OF SIGNS
1	W20-1	48"x48"	ROAD WORK AHEAD	1 - 4"X6"	8
2	G20-2	36"x18"	END ROAD WORK	1 - 4"x4"	4
3 *	SC6-3(CA)	48"x60"	RAMP CLOSED(DATE THRU DATE)	1 - 4"X6"	2
4	C40(CA)	72"x36"	TRAFFIC FINES DOUBLED IN CONSTRUCTION ZONES	PORTABLE MOUNT	2
5 **	S61-9(CA)	72"x42"	RIDE SHARING INFO CALL 1-800-COMMUTE	2 - 4"x6"	2
-	-	-	-	-	-
TOTAL					18

NOTE: SIGN LOCATIONS SHOWN ARE APPROXIMATE. EXACT LOCATIONS TO BE DETERMINED BY THE ENGINEER

* = INSTALL SC6-3(CA) 7 DAYS PRIOR TO RAMP CLOSURE. USE SC6-A AND SC6-B OVERLAYS WITH APPROPRAITE DATES FOR EACH CLOSURE

** = "1-800-COMMUTE" SIGNS TO BE INSTALLED AT SAME TIMES AS SC6-4(CA) SIGNS

NOTES THIS SHEET:

1. LOCATION OF CONSTRUCTION SIGNS SHOWN ARE APPROXIMATE. EXACT LOCATIONS TO BE DETERMINED BY THE ENGINEER
2. SEE STAGE CONSTRUCTION/TRAFFIC HANDLING PLANS (TH) AND DETOUR PLANS FOR ADDITIONAL SIGNS. THE CONTRACTOR SHALL INSTALL PERMANENT SIGNS WHERE POSSIBLE TO SUPPLEMENT STAGE CONSTRUCTION SIGNS.
3. THE CONTRACTOR SHALL INSTALL SIGN OVERLAY ON THE CONSTRUCTION AREA SIGN PLANS AS DIRECTED BY THE ENGINEER
4. THE CONTRACTOR SHALL COVER ANY CONFLICTING MESSAGES ON ANY SIGN AS DIRECTED BY THE ENGINEER
5. ALL SPECIAL SIGNS SHALL HAVE 8" SERIES LETTERS AND NUMBERS, UNLESS OTHERWISE NOTED ON THE PLANS

THIS PLAN IS ACCURATE FOR CONSTRUCTION AREA SIGN WORK ONLY

CONSTRUCTION AREA SIGN PLAN

NO SCALE

CS-1

REVISED BY | DATE REVISED

CALCULATED-DESIGNED BY | CHECKED BY

CONSULTANT FUNCTIONAL SUPERVISOR: ED KOUZI

STATE OF CALIFORNIA - DEPARTMENT OF TRANSPORTATION

Caltrans

LAST REVISION 00-00-00 | DATE PLOTTED => 7/14/2009 | TIME PLOTTED => 9:48:20 AM

RELATIVE BORDER SCALE IS IN INCHES 0 1 2 3

USERNAME => SmithJH
DGN FILE => ...\0f1501a001.dgn

CU 08220

EA 0F1500

Dist	COUNTY	ROUTE	POST MILES TOTAL PROJECT	SHEET No.	TOTAL SHEETS
8	SBd	10	33.3/R36.9	XXX	XXX

REGISTERED CIVIL ENGINEER DATE

PLANS APPROVAL DATE

REGISTERED PROFESSIONAL ENGINEER No. Exp. CIVIL STATE OF CALIFORNIA

THE STATE OF CALIFORNIA OR ITS OFFICERS OR AGENTS SHALL NOT BE RESPONSIBLE FOR THE ACCURACY OR COMPLETENESS OF ELECTRONIC COPIES OF THIS PLAN SHEET.

SANBAG
1170 WEST 3RD STREET
2ND FLOOR
SAN BERNARDINO, CA 92410

AECOM
999 W. TOWN & COUNTRY RD
ORANGE, CA 92868

LEGEND:

- XX CONSTRUCTION NOTES
- XX CONSTRUCTION AREA SIGN
- BT XX BEGIN TEMPORARY TRAFFIC STRIPE
- ET XX END TEMPORARY TRAFFIC STRIPE
- BR XX BEGIN REMOVAL PAVEMENT DELINEATION
- ER XX END REMOVAL PAVEMENT DELINEATION
- T XX TEMPORARY TRAFFIC STRIPE
- R XX REMOVE PAVEMENT DELINEATON
- CONSTRUCT THIS STAGE
- REMOVE AND CONSTRUCT THIS STAGE
- TEMPORARY AC PAVEMENT
- PORTABLE DELINEATOR
- SURFACE MOUNTED CHANNELIZERS
- DIRECTION OF TRAFFIC (NOT A PAVEMENT MARKING)
- TEMPORARY PAVEMENT MARKING ARROW
- TEMPORARY RAILING (TYPE K) WITH TRAFFIC SCREEN & REFLECTORS
- EXISTING SIGN (ONE POST)
- EXISTING SIGN (TWO POST)
- EXISTING OVERHEAD SIGN
- SIGN TO BE INSTALLED (ONE POST)
- SIGN TO BE INSTALLED (TWO POST)
- SIGN TO BE INSTALLED (SADDLE BRACKET METHOD)
- TYPE III BARRICADE
- TYPE III BARRICADE WITH SIGN
- FLASHING ARROW SIGN (FAS)
- FLASHING BEACON
- EXISTING PAVEMENT MARKING
- (S) INDICATES EXISTING SIGNALIZED INTERSECTION

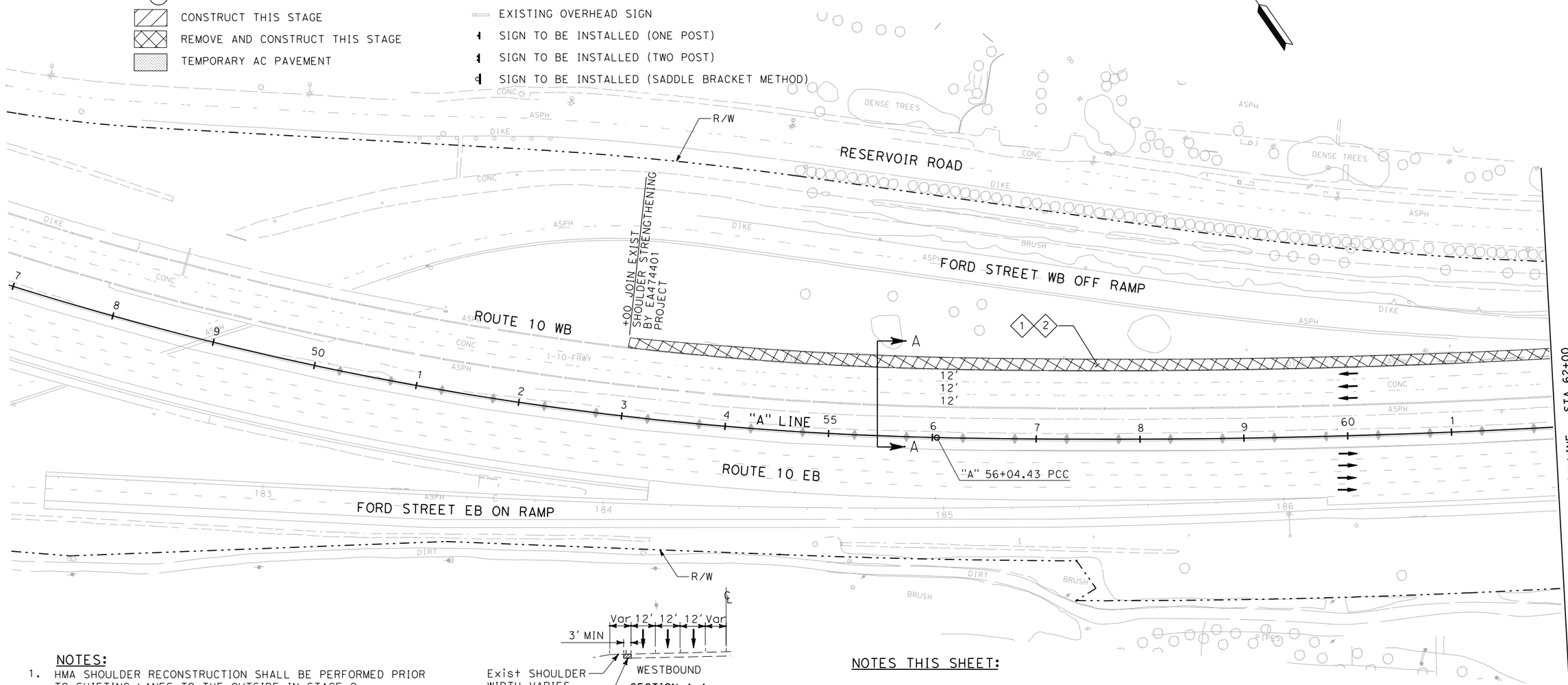

SECTION A-A
NOT TO SCALE
STA 53+00 TO STA 64+00
STA 67+00 TO STA 108+00
STA 111+50 TO STA 139+50

NOTES:

1. HMA SHOULDER RECONSTRUCTION SHALL BE PERFORMED PRIOR TO SHIFTING LANES TO THE OUTSIDE IN STAGE 2.
2. HMA SHOULDER RECONSTRUCTION DOES NOT APPLY TO SHOULDERS ON BRIDGE STRUCTURES.
3. HMA SHOULDER RECONSTRUCTION SHALL BE PERFORMED DURING NIGHTIME CLOSURES OF THE #3 WESTBOUND LANE.
4. SECTION A-A APPLIES TO SC-1 THROUGH SC-8.

NOTES THIS SHEET:

1. SHOULDER RECONSTRUCTION.
2. HMA (TYPE A) 4" DEPTH.

THIS PLAN ACCURATE FOR TRAFFIC HANDLING ONLY

STAGE CONSTRUCTION AND TRAFFIC HANDLING PLAN STAGE 1

SCALE 1"=50'

SC-1

REVISED BY	DATE REVISED

CALCULATED-DESIGNED BY
CHECKED BY

CONSULTANT FUNCTIONAL SUPERVISOR: ED KOUZI

STATE OF CALIFORNIA - DEPARTMENT OF TRANSPORTATION

Caltrans

RELATIVE BORDER SCALE IS IN INCHES 0 1 2 3

USERNAME => SmithJH
DGN FILE => ...\0f150ma001.dgn

CU 08220

EA 0F1500

LAST REVISION 00-00-00
DATE PLOTTED => 7/14/2009
TIME PLOTTED => 9:48:49 AM

Dist	COUNTY	ROUTE	POST MILES TOTAL PROJECT	SHEET No.	TOTAL SHEETS
8	SBd	10	33.3/R36.9	XXX	XXX

REGISTERED CIVIL ENGINEER DATE

PLANS APPROVAL DATE

REGISTERED PROFESSIONAL ENGINEER No. Exp. CIVIL STATE OF CALIFORNIA

THE STATE OF CALIFORNIA OR ITS OFFICERS OR AGENTS SHALL NOT BE RESPONSIBLE FOR THE ACCURACY OR COMPLETENESS OF ELECTRONIC COPIES OF THIS PLAN SHEET.

SANBAG
1170 WEST 3RD STREET
2ND FLOOR
SAN BERNARDINO, CA 92410

AECOM
999 W. TOWN & COUNTRY RD
ORANGE, CA 92868

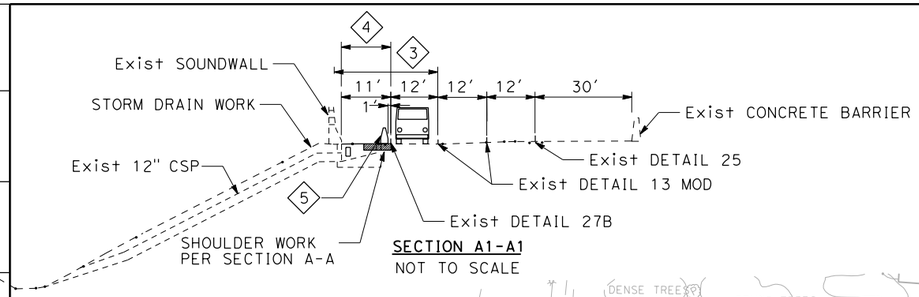

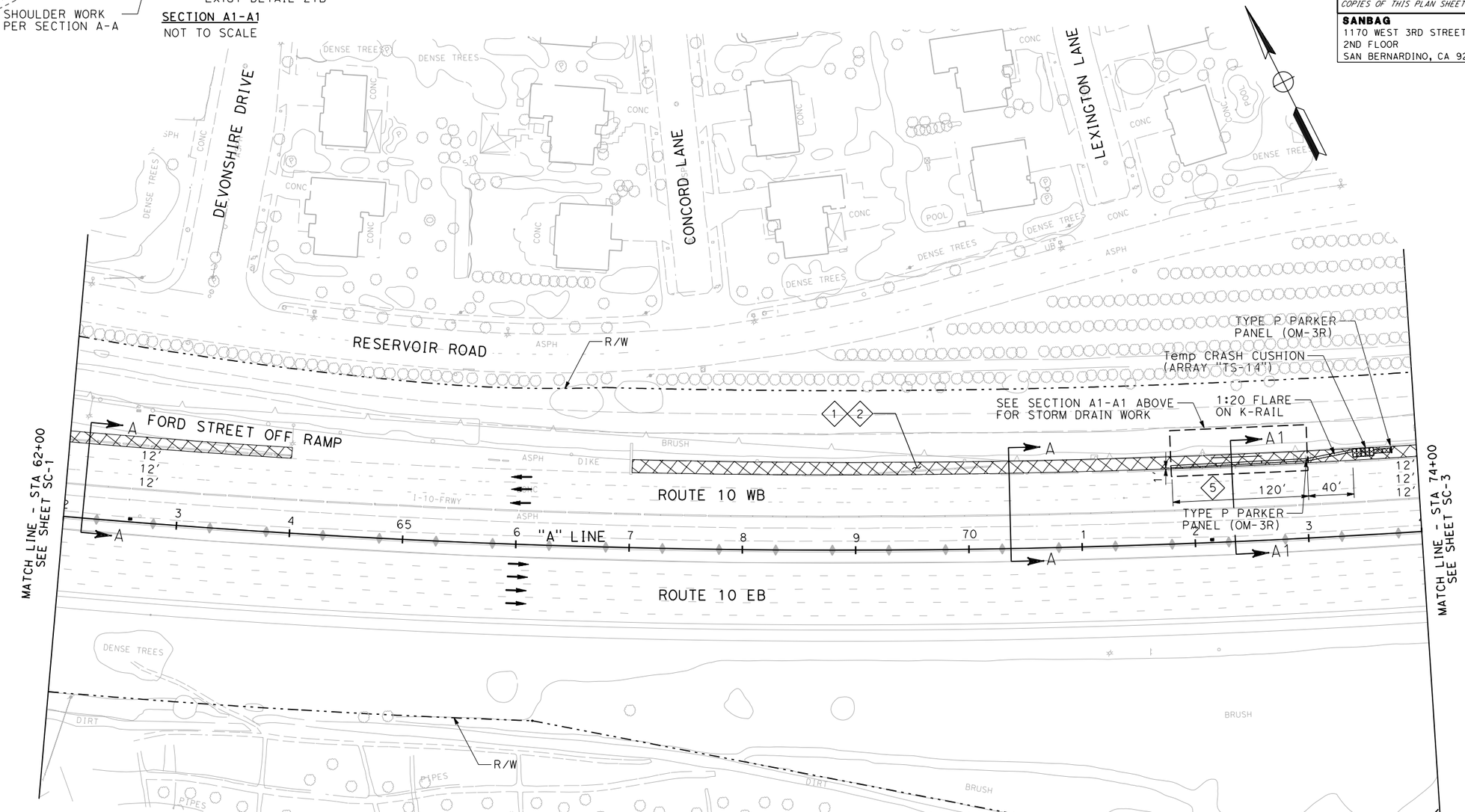

NOTES THIS SHEET:

SEE SC-1 FOR LEGEND AND SECTION A-A.

1. SHOULDER RECONSTRUCTION.
2. HMA (TYPE A) 4" DEPTH
3. STORM DRAIN WORK TO BE DONE AFTER COMPLETION OF WITH SHOULDER WORK DURING MOVING LANE CLOSURE PER CALTRANS STD PLAN T15.
4. CONTRACTOR SHALL BACKFILL OR PLATE THE STORM DRAIN EXCAVATION DURING NONWORK HOURS.
5. INSTALL 160' K-RAIL AFTER COMPLETION OF SHOULDER WORK.

THIS PLAN ACCURATE FOR TRAFFIC HANDLING ONLY

STAGE CONSTRUCTION AND TRAFFIC HANDLING PLAN STAGE 1

SCALE 1"=50'

SC-2

STATE OF CALIFORNIA - DEPARTMENT OF TRANSPORTATION

Caltrans

CONSULTANT FUNCTIONAL SUPERVISOR: ED KOUZI

CALCULATED-DESIGNED BY

CHECKED BY

REVISED BY

DATE REVISED

LAST REVISION 00-00-00

DATE PLOTTED => 7/14/2009
TIME PLOTTED => 9:48:54 AM

RELATIVE BORDER SCALE IS IN INCHES 0 1 2 3

USERNAME => SmithJH
DGN FILE => ...\0f150ma002.dgn

CU 08220

EA 0F1500

Dist	COUNTY	ROUTE	POST MILES TOTAL PROJECT	SHEET No.	TOTAL SHEETS
8	SBd	10	33.3/R36.9	XXX	XXX

REGISTERED CIVIL ENGINEER DATE

PLANS APPROVAL DATE

REGISTERED PROFESSIONAL ENGINEER No. Exp. CIVIL STATE OF CALIFORNIA

THE STATE OF CALIFORNIA OR ITS OFFICERS OR AGENTS SHALL NOT BE RESPONSIBLE FOR THE ACCURACY OR COMPLETENESS OF ELECTRONIC COPIES OF THIS PLAN SHEET.

SANBAG
1170 WEST 3RD STREET
2ND FLOOR
SAN BERNARDINO, CA 92410

AECOM
999 W. TOWN & COUNTRY RD
ORANGE, CA 92868

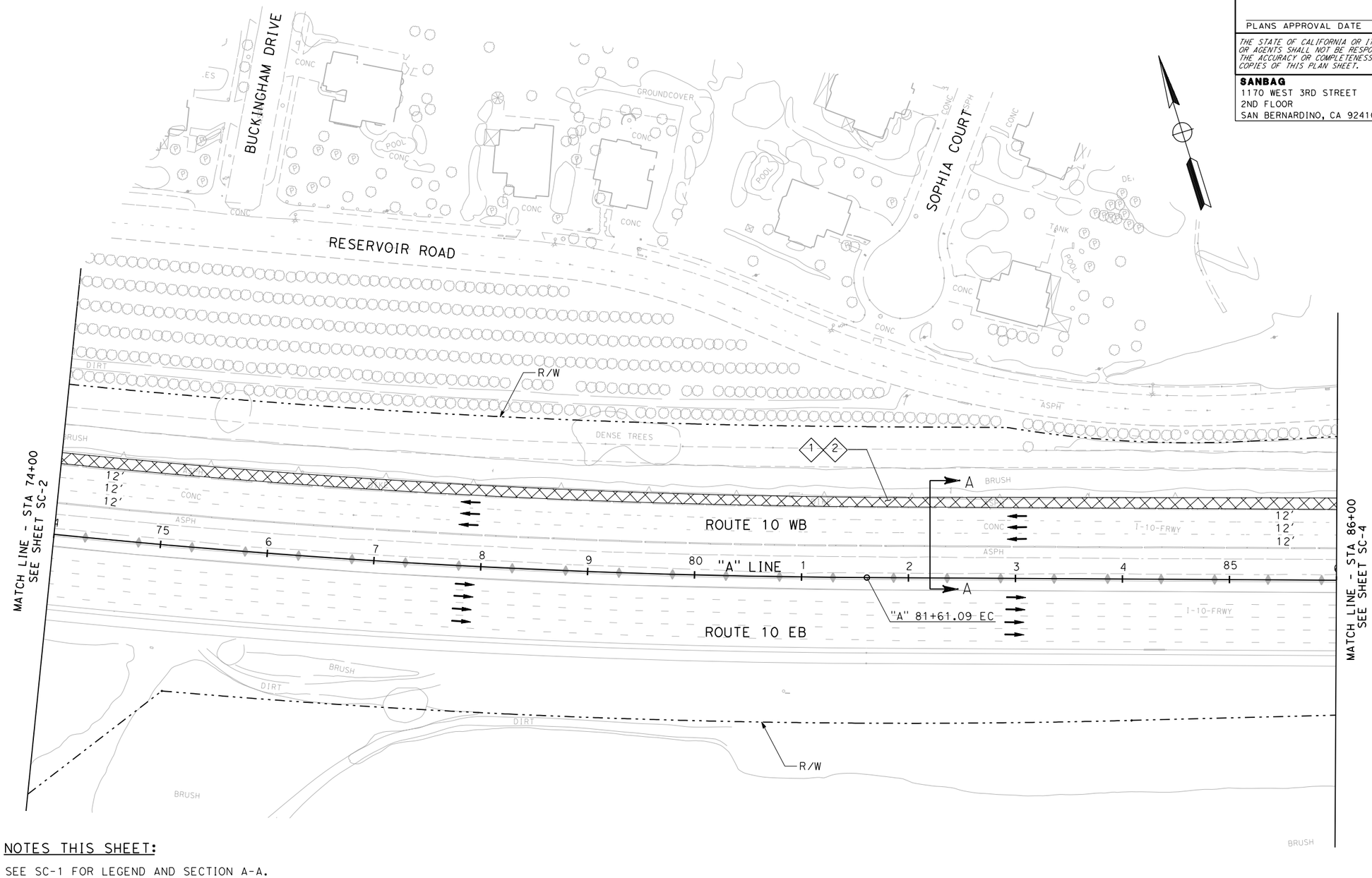

NOTES THIS SHEET:

SEE SC-1 FOR LEGEND AND SECTION A-A.

1. SHOULDER RECONSTRUCTION.
2. HMA (TYPE A) 4" DEPTH.

THIS PLAN IS ACCURATE FOR TRAFFIC HANDLING ONLY

STAGE CONSTRUCTION AND TRAFFIC HANDLING PLAN STAGE 1

SCALE 1"=50'

SC-3

STATE OF CALIFORNIA - DEPARTMENT OF TRANSPORTATION

Caltrans

CONSULTANT FUNCTIONAL SUPERVISOR: ED KOUZI

CALCULATED-DESIGNED BY

CHECKED BY

REVISED BY

DATE REVISED

LAST REVISION 00-00-00

DATE PLOTTED => 7/14/2009
TIME PLOTTED => 9:48:58 AM

RELATIVE BORDER SCALE IS IN INCHES 0 1 2 3

USERNAME => SmithJH
DGN FILE => ...\0f150ma003.dgn

CU 08220

EA 0F1500

Dist	COUNTY	ROUTE	POST MILES TOTAL PROJECT	SHEET No.	TOTAL SHEETS
8	SBd	10	33.3/R36.9	XXX	XXX

REGISTERED CIVIL ENGINEER DATE

PLANS APPROVAL DATE

REGISTERED PROFESSIONAL ENGINEER No. Exp. CIVIL STATE OF CALIFORNIA

THE STATE OF CALIFORNIA OR ITS OFFICERS OR AGENTS SHALL NOT BE RESPONSIBLE FOR THE ACCURACY OR COMPLETENESS OF ELECTRONIC COPIES OF THIS PLAN SHEET.

SANBAG
1170 WEST 3RD STREET
2ND FLOOR
SAN BERNARDINO, CA 92410

AECOM
999 W. TOWN & COUNTRY RD
ORANGE, CA 92868

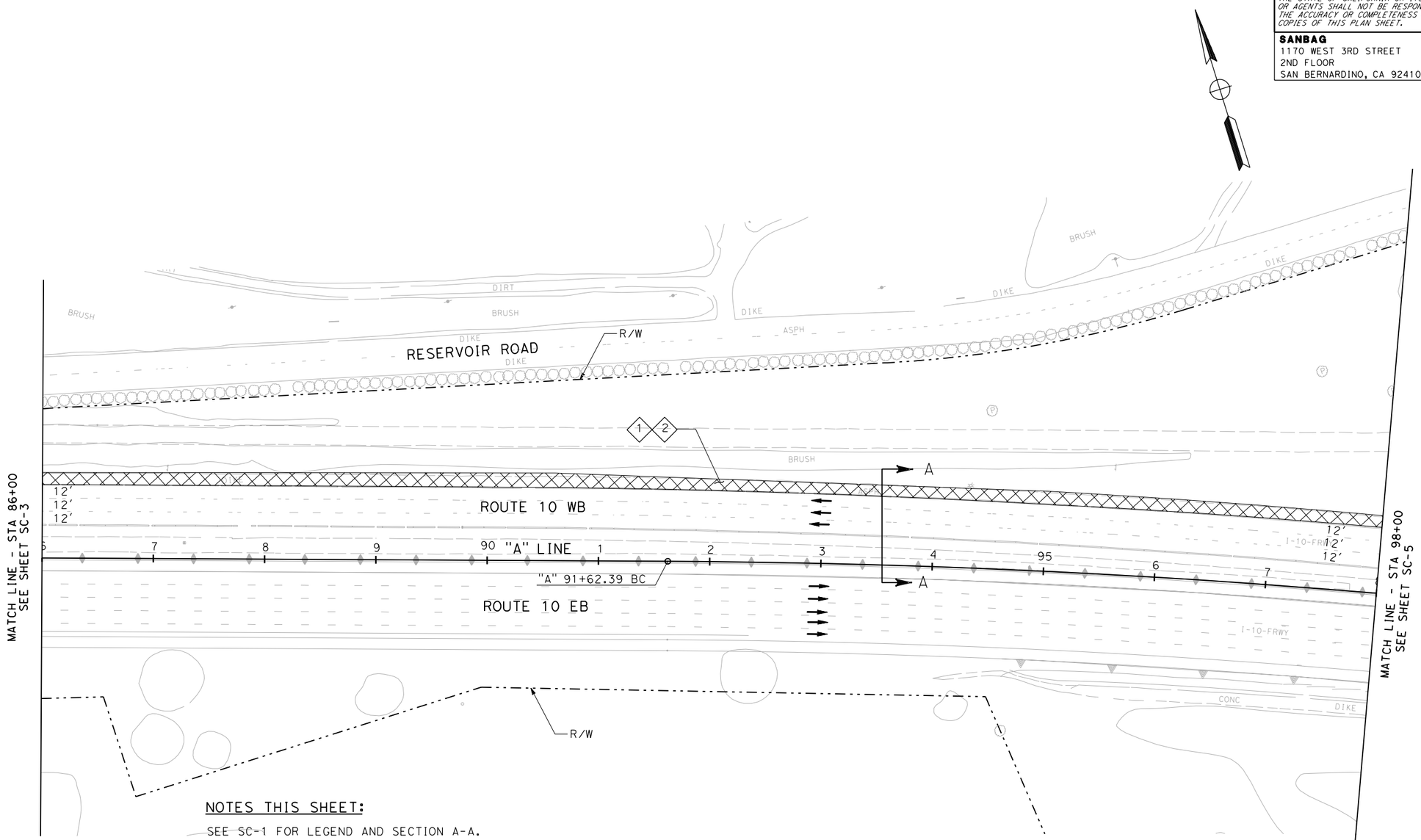

NOTES THIS SHEET:

SEE SC-1 FOR LEGEND AND SECTION A-A.

1 SHOULDER RECONSTRUCTION.

2 HMA (TYPE A) 4" DEPTH.

THIS PLAN ACCURATE FOR TRAFFIC HANDLING ONLY

STAGE CONSTRUCTION AND TRAFFIC HANDLING PLAN STAGE 1

SCALE 1"=50'

SC-4

REVISED BY	DATE REVISED

CALCULATED-DESIGNED BY

CHECKED BY

CONSULTANT FUNCTIONAL SUPERVISOR

ED KOUZI

STATE OF CALIFORNIA - DEPARTMENT OF TRANSPORTATION

Caltrans

LAST REVISION 00-00-00

DATE PLOTTED => 7/14/2009
TIME PLOTTED => 9:49:02 AM

RELATIVE BORDER SCALE IS IN INCHES 0 1 2 3

USERNAME => SmithJH
DGN FILE => ...\0f150ma004.dgn

CU 08220

EA 0F1500

Dist	COUNTY	ROUTE	POST MILES TOTAL PROJECT	SHEET No.	TOTAL SHEETS
8	SBd	10	33.3/R36.9	XXX	XXX

REGISTERED CIVIL ENGINEER DATE

PLANS APPROVAL DATE

REGISTERED PROFESSIONAL ENGINEER No. Exp. CIVIL STATE OF CALIFORNIA

THE STATE OF CALIFORNIA OR ITS OFFICERS OR AGENTS SHALL NOT BE RESPONSIBLE FOR THE ACCURACY OR COMPLETENESS OF ELECTRONIC COPIES OF THIS PLAN SHEET.

SANBAG
1170 WEST 3RD STREET
2ND FLOOR
SAN BERNARDINO, CA 92410

AECOM
999 W. TOWN & COUNTRY RD
ORANGE, CA 92868

NOTES THIS SHEET:

SEE SC-1 FOR LEGEND AND SECTION A-A.

1. SHOULDER RECONSTRUCTION.
2. HMA (TYPE A) 4" DEPTH.

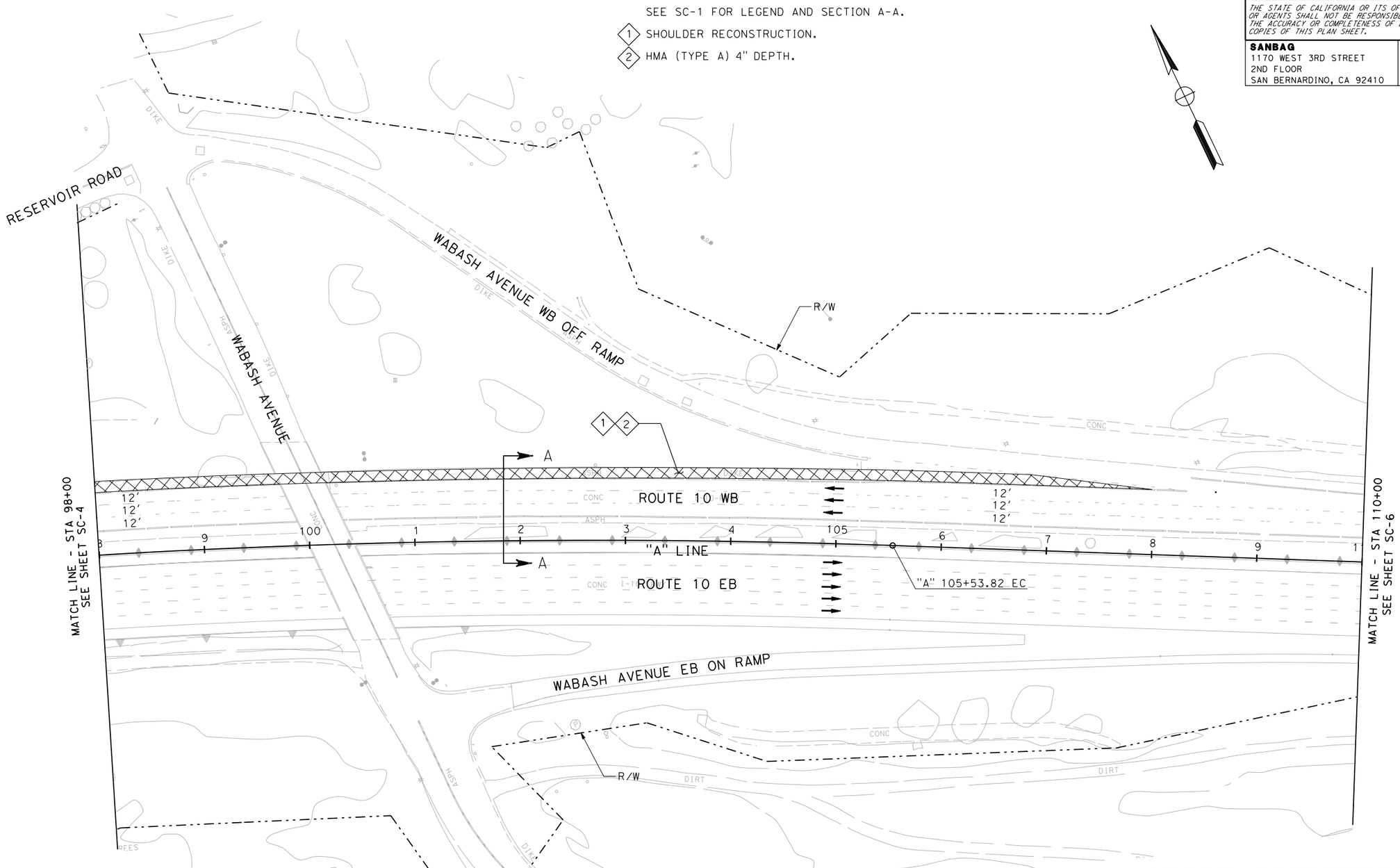

THIS PLAN ACCURATE FOR TRAFFIC HANDLING ONLY

STAGE CONSTRUCTION AND TRAFFIC HANDLING PLAN STAGE 1

SCALE 1"=50'

SC-5

REVISED BY	DATE REVISED

CALCULATED-DESIGNED BY

CHECKED BY

CONSULTANT FUNCTIONAL SUPERVISOR: ED KOUZI

STATE OF CALIFORNIA - DEPARTMENT OF TRANSPORTATION

Caltrans

RELATIVE BORDER SCALE IS IN INCHES 0 1 2 3

USERNAME => SmithJH
DGN FILE => ...\0f150ma005.dgn

CU 08220

EA 0F1500

LAST REVISION 00-00-00

DATE PLOTTED => 7/14/2009
TIME PLOTTED => 9:49:05 AM

Dist	COUNTY	ROUTE	POST MILES TOTAL PROJECT	SHEET No.	TOTAL SHEETS
8	SBd	10	33.3/R36.9	XXX	XXX

REGISTERED CIVIL ENGINEER DATE

PLANS APPROVAL DATE

REGISTERED PROFESSIONAL ENGINEER No. Exp. CIVIL STATE OF CALIFORNIA

THE STATE OF CALIFORNIA OR ITS OFFICERS OR AGENTS SHALL NOT BE RESPONSIBLE FOR THE ACCURACY OR COMPLETENESS OF ELECTRONIC COPIES OF THIS PLAN SHEET.

SANBAG
1170 WEST 3RD STREET
2ND FLOOR
SAN BERNARDINO, CA 92410

AECOM
999 W. TOWN & COUNTRY RD
ORANGE, CA 92868

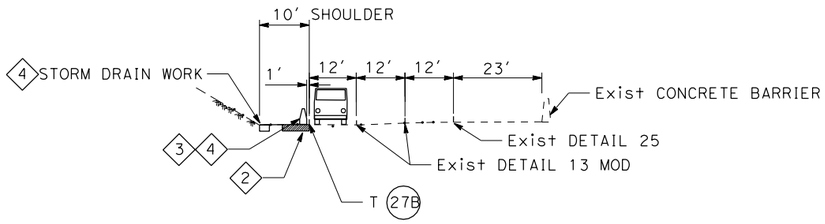

SECTION B1-B1
NOT TO SCALE

NOTES THIS SHEET:

SEE SC-1 FOR LEGEND AND SECTION A-A.

1. SHOULDER RECONSTRUCTION.
2. HMA (TYPE A) 4" DEPTH.
3. CONTRACTOR SHALL INSTALL 260' OF K-RAIL AFTER COMPLETION OF SHOULDER WORK.

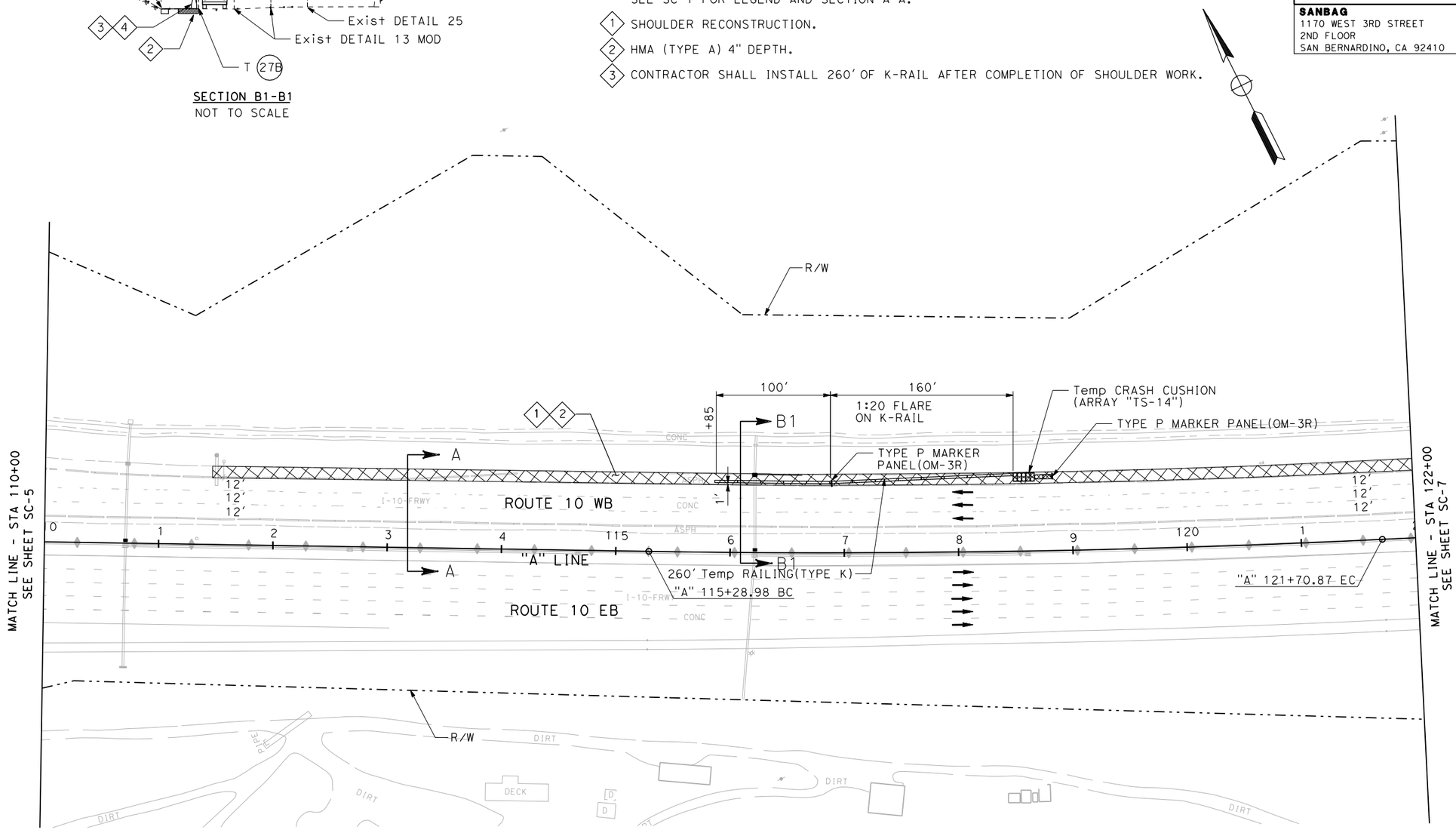

THIS PLAN ACCURATE FOR TRAFFIC HANDLING ONLY

STAGE CONSTRUCTION AND TRAFFIC HANDLING PLAN STAGE 1

SCALE 1"=50'

SC-6

STATE OF CALIFORNIA - DEPARTMENT OF TRANSPORTATION

Caltrans

CONSULTANT FUNCTIONAL SUPERVISOR: ED KOUZI

CALCULATED-DESIGNED BY

CHECKED BY

REVISED BY

DATE REVISED

LAST REVISION 00-00-00

DATE PLOTTED => 7/14/2009
TIME PLOTTED => 9:49:07 AM

RELATIVE BORDER SCALE IS IN INCHES 0 1 2 3

USERNAME => SmithJH
DGN FILE => ...\0f150ma006.dgn

CU 08220

EA 0F1500

Dist	COUNTY	ROUTE	POST MILES TOTAL PROJECT	SHEET No.	TOTAL SHEETS
8	SBd	10	33.3/R36.9	XXX	XXX

REGISTERED CIVIL ENGINEER DATE

PLANS APPROVAL DATE

REGISTERED PROFESSIONAL ENGINEER No. Exp. CIVIL STATE OF CALIFORNIA

THE STATE OF CALIFORNIA OR ITS OFFICERS OR AGENTS SHALL NOT BE RESPONSIBLE FOR THE ACCURACY OR COMPLETENESS OF ELECTRONIC COPIES OF THIS PLAN SHEET.

SANBAG
1170 WEST 3RD STREET
2ND FLOOR
SAN BERNARDINO, CA 92410

AECOM
999 W. TOWN & COUNTRY RD
ORANGE, CA 92868

NOTES THIS SHEET:

SEE SC-1 FOR LEGEND AND SECTION A-A.

1 SHOULDER RECONSTRUCTION.

2 HMA (TYPE A) 4" DEPTH.

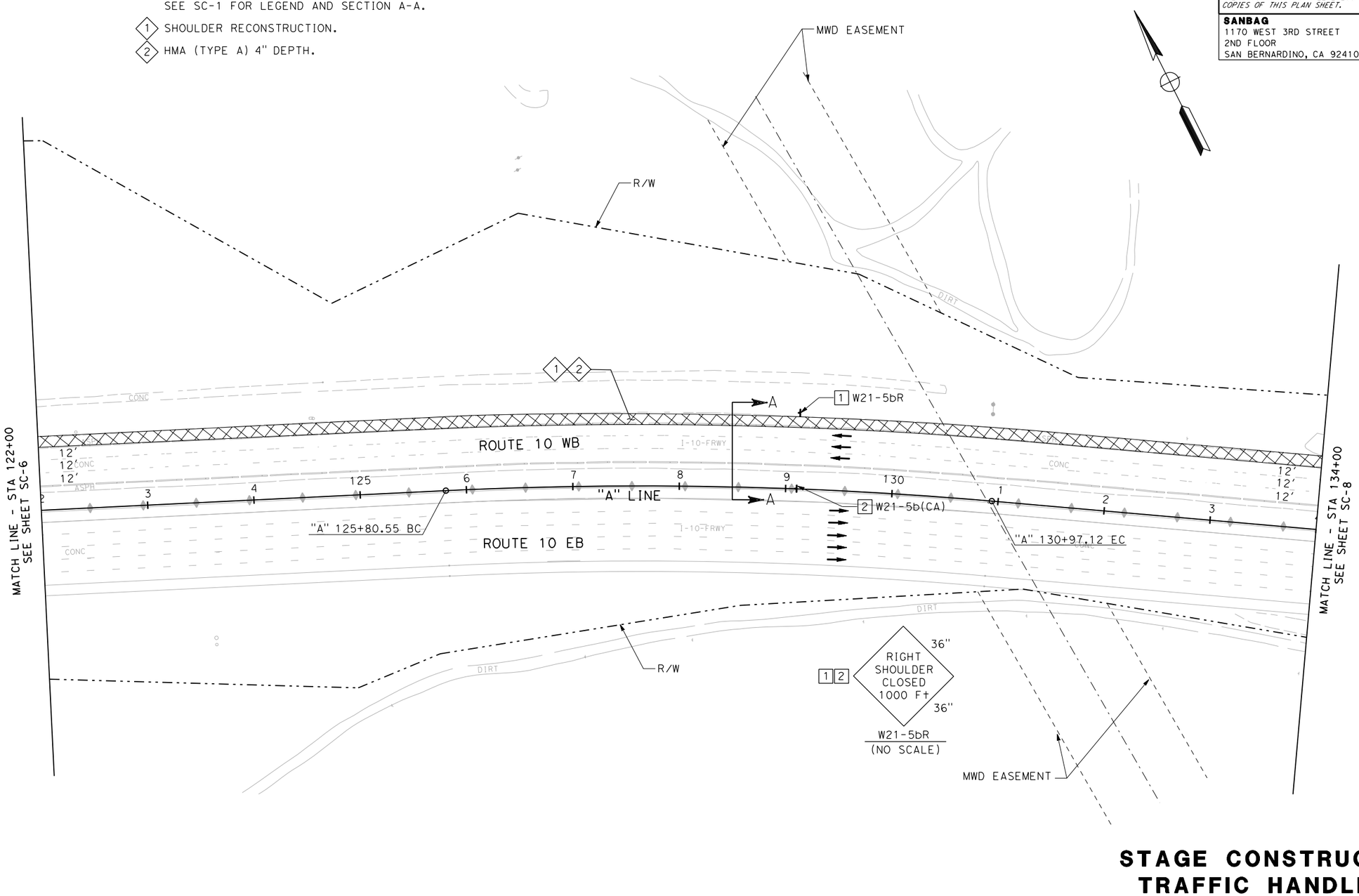

THIS PLAN IS ACCURATE FOR TRAFFIC HANDLING ONLY

STAGE CONSTRUCTION AND TRAFFIC HANDLING PLAN STAGE 1

SCALE 1"=50'

SC-7

REVISED BY	DATE REVISED

CALCULATED-DESIGNED BY	
CHECKED BY	

CONSULTANT FUNCTIONAL SUPERVISOR: ED KOUZI

STATE OF CALIFORNIA - DEPARTMENT OF TRANSPORTATION

Caltrans

LAST REVISION 00-00-00

DATE PLOTTED => 7/14/2009
TIME PLOTTED => 9:49:10 AM

RELATIVE BORDER SCALE IS IN INCHES 0 1 2 3

USERNAME => SmithJH
DGN FILE => ...\0f150ma007.dgn

CU 08220

EA 0F1500

Dist	COUNTY	ROUTE	POST MILES TOTAL PROJECT	SHEET No.	TOTAL SHEETS
8	SBd	10	33.3/R36.9	XXX	XXX

REGISTERED CIVIL ENGINEER DATE

PLANS APPROVAL DATE

REGISTERED PROFESSIONAL ENGINEER No. Exp. CIVIL STATE OF CALIFORNIA

THE STATE OF CALIFORNIA OR ITS OFFICERS OR AGENTS SHALL NOT BE RESPONSIBLE FOR THE ACCURACY OR COMPLETENESS OF ELECTRONIC COPIES OF THIS PLAN SHEET.

SANBAG
1170 WEST 3RD STREET
2ND FLOOR
SAN BERNARDINO, CA 92410

AECOM
999 W. TOWN & COUNTRY RD
ORANGE, CA 92868

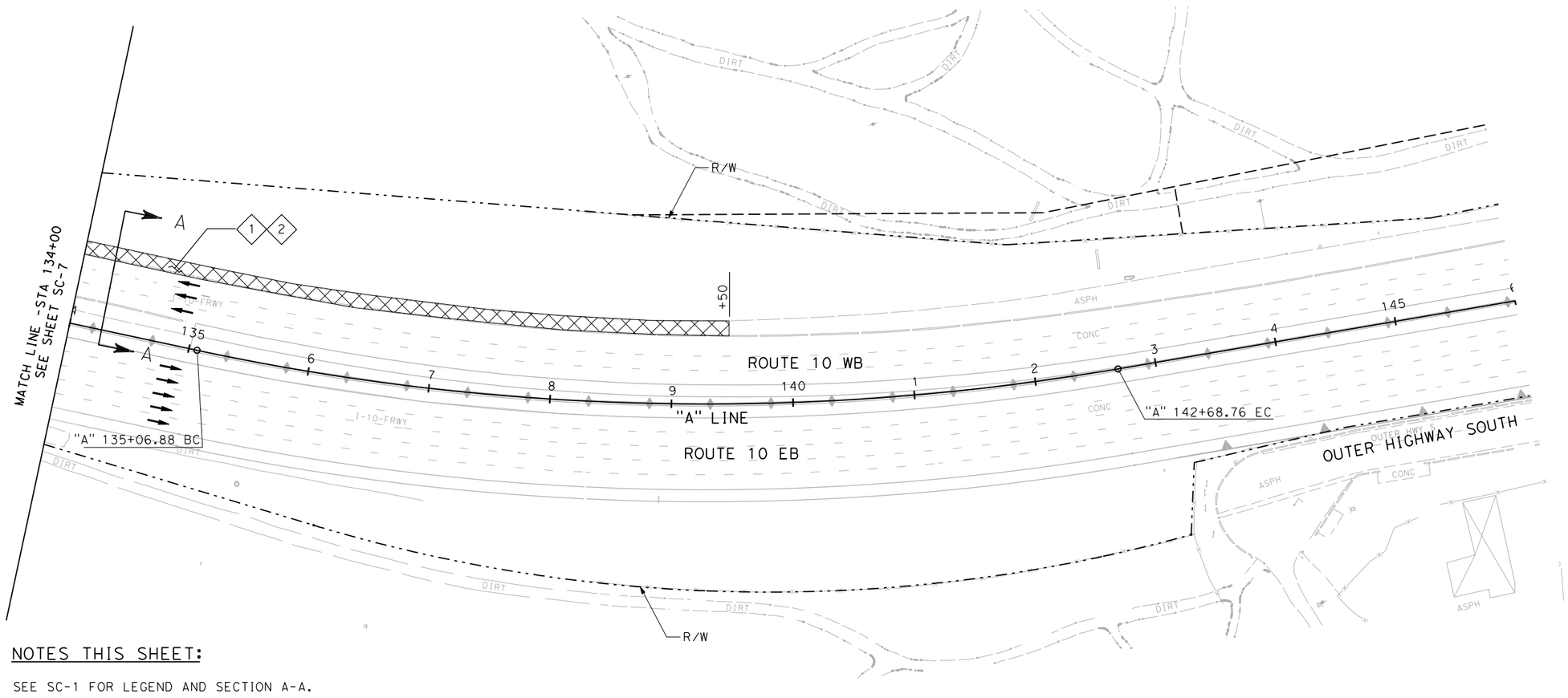

NOTES THIS SHEET:

SEE SC-1 FOR LEGEND AND SECTION A-A.

1. SHOULDER RECONSTRUCTION.
2. 3' WIDE HMA (TYPE A) 4" DEPTH.

THIS PLAN IS ACCURATE FOR TRAFFIC HANDLING ONLY

STAGE CONSTRUCTION AND TRAFFIC HANDLING PLAN STAGE 1

SCALE 1"=50'

SC-8

STATE OF CALIFORNIA - DEPARTMENT OF TRANSPORTATION

Caltrans

CONSULTANT FUNCTIONAL SUPERVISOR: ED KOUZI

CALCULATED-DESIGNED BY

CHECKED BY

REVISED BY

DATE REVISED

LAST REVISION 00-00-00

DATE PLOTTED => 7/14/2009
TIME PLOTTED => 9:49:12 AM

RELATIVE BORDER SCALE IS IN INCHES 0 1 2 3

USERNAME => SmithJH
DGN FILE => ...\0f150ma008.dgn

CU 08220

EA 0F1500

Dist	COUNTY	ROUTE	POST MILES TOTAL PROJECT	SHEET No.	TOTAL SHEETS
8	SBd	10	33.3/R36.9	XXX	XXX

REGISTERED CIVIL ENGINEER DATE

PLANS APPROVAL DATE

REGISTERED PROFESSIONAL ENGINEER No. Exp. CIVIL STATE OF CALIFORNIA

THE STATE OF CALIFORNIA OR ITS OFFICERS OR AGENTS SHALL NOT BE RESPONSIBLE FOR THE ACCURACY OR COMPLETENESS OF ELECTRONIC COPIES OF THIS PLAN SHEET.

SANBAG
1170 WEST 3RD STREET
2ND FLOOR
SAN BERNARDINO, CA 92410

AECOM
999 W. TOWN & COUNTRY RD
ORANGE, CA 92868

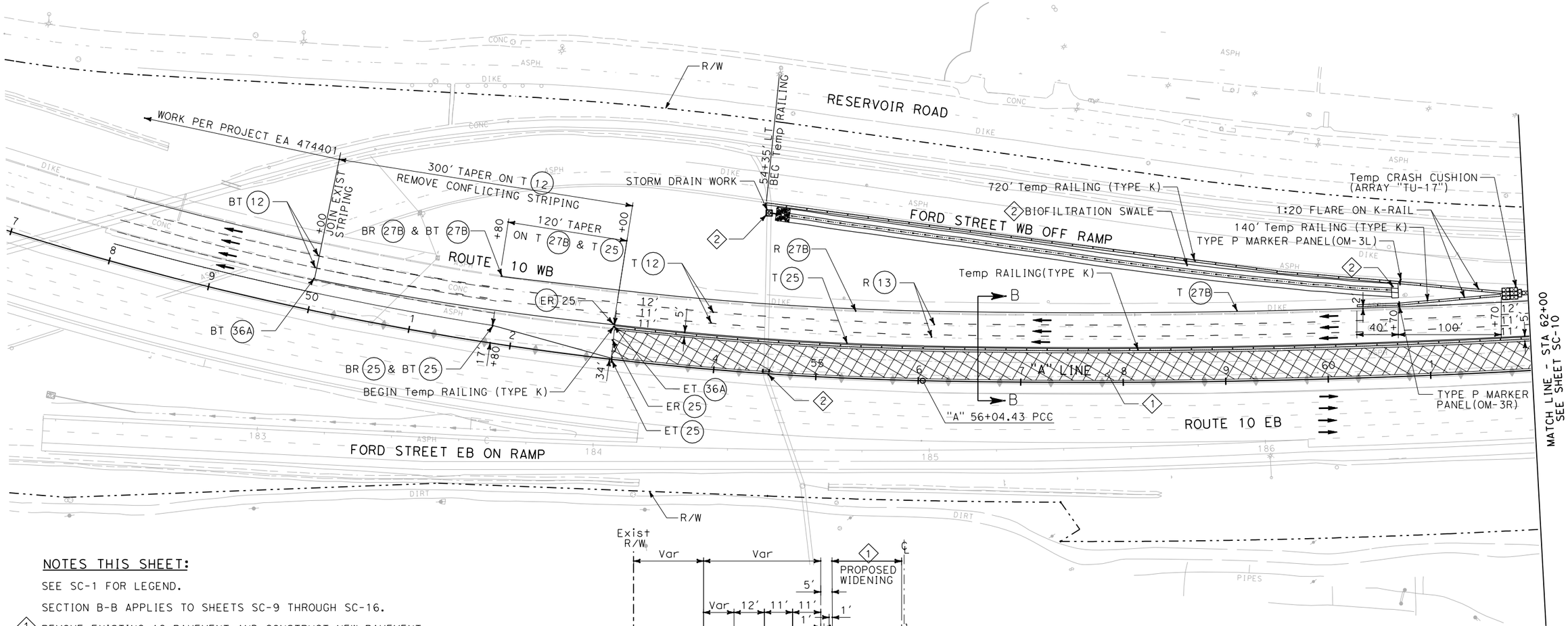

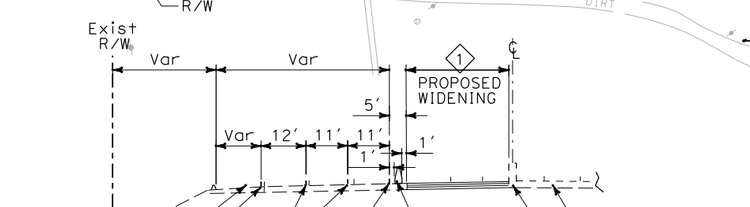

SECTION B-B
NOT TO SCALE
STA 53+00 TO STA 135+50

NOTES THIS SHEET:

SEE SC-1 FOR LEGEND.

SECTION B-B APPLIES TO SHEETS SC-9 THROUGH SC-16.

(1) REMOVE EXISTING AC PAVEMENT AND CONSTRUCT NEW PAVEMENT,

(2) CONSTRUCT BIOSWALE AND STORM DRAIN FACILITIES.

THIS PLAN ACCURATE FOR TRAFFIC HANDLING ONLY

STAGE CONSTRUCTION AND TRAFFIC HANDLING PLAN STAGE 2

SCALE 1"=50'

SC-9

STATE OF CALIFORNIA - DEPARTMENT OF TRANSPORTATION

Caltrans

CONSULTANT FUNCTIONAL SUPERVISOR: ED KOUZI

CALCULATED-DESIGNED BY

CHECKED BY

REVISED BY

DATE REVISED

LAST REVISION 00-00-00

DATE PLOTTED => 7/14/2009
TIME PLOTTED => 9:49:17 AM

RELATIVE BORDER SCALE IS IN INCHES 0 1 2 3

USERNAME => SmithJH
DGN FILE => ...\0f150ma009.dgn

CU 08220

EA 0F1500

Dist	COUNTY	ROUTE	POST MILES TOTAL PROJECT	SHEET No.	TOTAL SHEETS
8	SBd	10	33.3/R36.9	XXX	XXX

REGISTERED CIVIL ENGINEER DATE

PLANS APPROVAL DATE

REGISTERED PROFESSIONAL ENGINEER No. Exp. CIVIL STATE OF CALIFORNIA

THE STATE OF CALIFORNIA OR ITS OFFICERS OR AGENTS SHALL NOT BE RESPONSIBLE FOR THE ACCURACY OR COMPLETENESS OF ELECTRONIC COPIES OF THIS PLAN SHEET.

SANBAG
1170 WEST 3RD STREET
2ND FLOOR
SAN BERNARDINO, CA 92410

AECOM
999 W. TOWN & COUNTRY RD
ORANGE, CA 92868

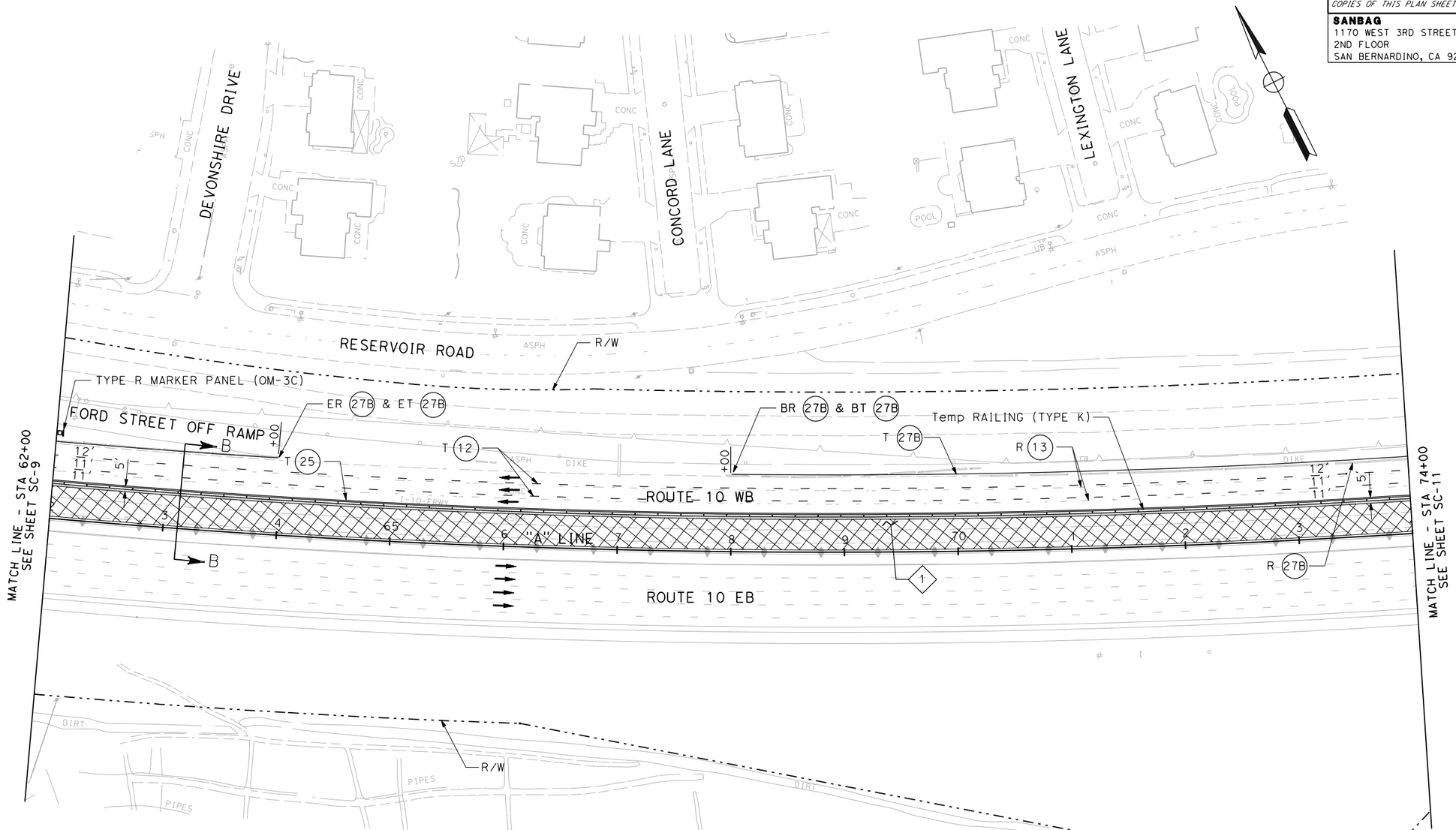

NOTES THIS SHEET:

SEE SC-1 FOR LEGEND AND SC-9 FOR SECTION B-B.

1 REMOVE EXISTING AC PAVEMENT AND CONSTRUCT NEW PAVEMENT AND STORM DRAIN FACILITIES.

THIS PLAN ACCURATE FOR TRAFFIC HANDLING ONLY

STAGE CONSTRUCTION AND TRAFFIC HANDLING PLAN STAGE 2

SCALE 1"=50'

SC-10

STATE OF CALIFORNIA - DEPARTMENT OF TRANSPORTATION

Caltrans

CONSULTANT FUNCTIONAL SUPERVISOR: ED KOUZI

CALCULATED-DESIGNED BY

CHECKED BY

REVISED BY

DATE REVISED

LAST REVISION 00-00-00

DATE PLOTTED => 7/14/2009
TIME PLOTTED => 9:49:19 AM

RELATIVE BORDER SCALE IS IN INCHES 0 1 2 3

USERNAME => SmithJH
DGN FILE => ...\0f150ma010.dgn

CU 08220

EA 0F1500

Dist	COUNTY	ROUTE	POST MILES TOTAL PROJECT	SHEET No.	TOTAL SHEETS
8	SBd	10	33.3/R36.9	XXX	XXX

REGISTERED CIVIL ENGINEER DATE

PLANS APPROVAL DATE

REGISTERED PROFESSIONAL ENGINEER No. Exp. CIVIL STATE OF CALIFORNIA

THE STATE OF CALIFORNIA OR ITS OFFICERS OR AGENTS SHALL NOT BE RESPONSIBLE FOR THE ACCURACY OR COMPLETENESS OF ELECTRONIC COPIES OF THIS PLAN SHEET.

SANBAG
1170 WEST 3RD STREET
2ND FLOOR
SAN BERNARDINO, CA 92410

AECOM
999 W. TOWN & COUNTRY RD
ORANGE, CA 92868

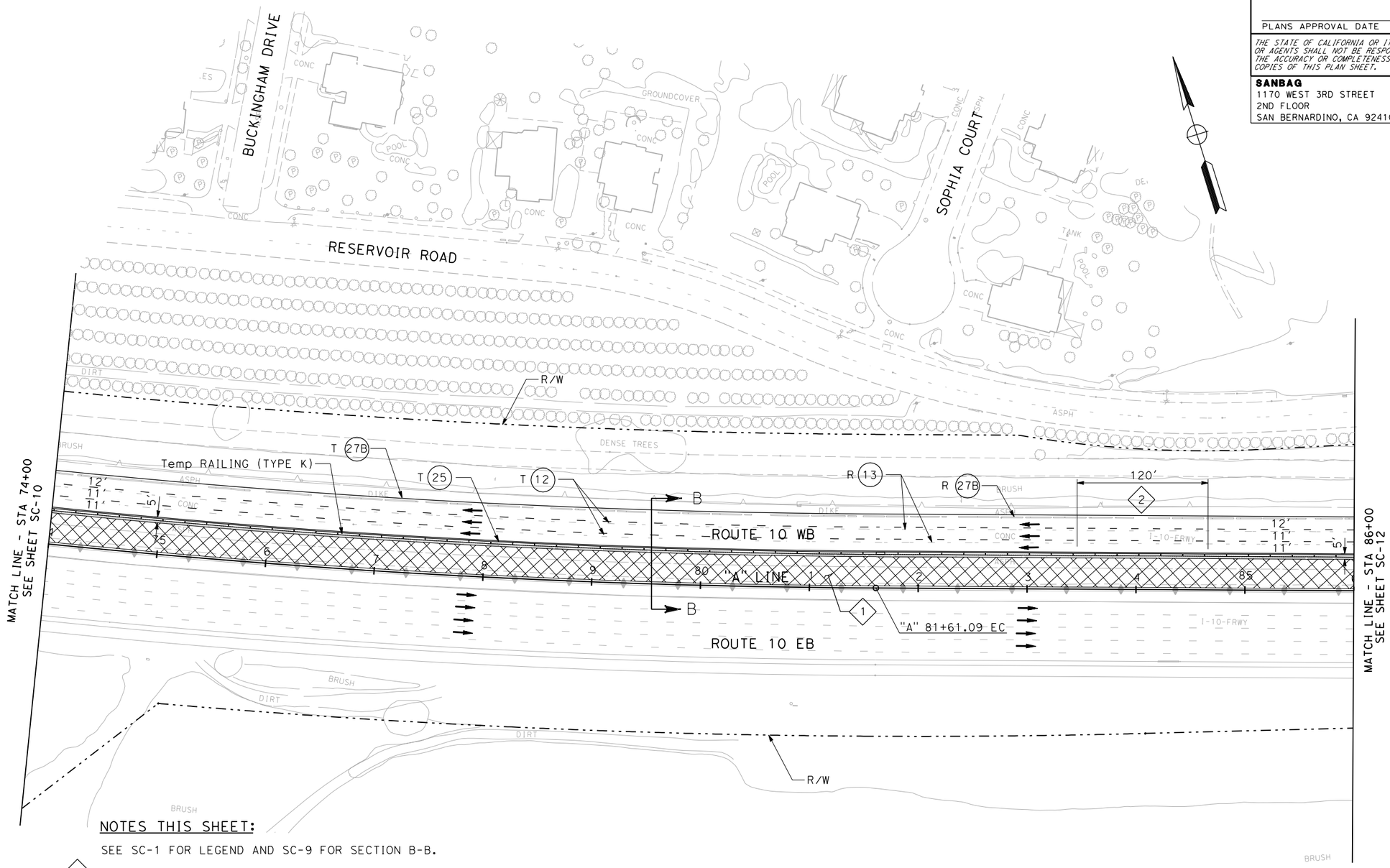

NOTES THIS SHEET:

SEE SC-1 FOR LEGEND AND SC-9 FOR SECTION B-B.

1. REMOVE EXISTING AC PAVEMENT AND CONSTRUCT NEW PAVEMENT AND STORM DRAIN FACILITIES.
2. THE CONTRACTOR, WITH THE RESIDENT ENGINEER'S APPROVAL SHALL DETERMINE THE LOCATION AND LENGTH OF THE ACCESS POINTS TO CONSTRUCTION AREAS. THE ACCESS POINTS SHALL BE CLOSED BY REMOVABLE K-RAILS DURING NON-WORK HOURS. THE LANE ADJACENT TO THE K-RAIL SHALL BE CLOSED PER CALTRANS STD. PLAN T-15 DURING NON-PEAK TRAFFIC HOURS.

THIS PLAN IS ACCURATE FOR TRAFFIC HANDLING ONLY

STAGE CONSTRUCTION AND TRAFFIC HANDLING PLAN STAGE 2

SCALE 1"=50'

SC-11

REVISED BY	DATE REVISED

CALCULATED-DESIGNED BY
CHECKED BY

CONSULTANT FUNCTIONAL SUPERVISOR
ED KOUZI

STATE OF CALIFORNIA - DEPARTMENT OF TRANSPORTATION
Caltrans

LAST REVISION 00-00-00
DATE PLOTTED => 7/14/2009
TIME PLOTTED => 9:49:21 AM

RELATIVE BORDER SCALE IS IN INCHES 0 1 2 3

USERNAME => SmithJH
DGN FILE => ...\0f150ma011.dgn

CU 08220

EA 0F1500

Dist	COUNTY	ROUTE	POST MILES TOTAL PROJECT	SHEET No.	TOTAL SHEETS
8	SBd	10	33.3/R36.9	XXX	XXX

REGISTERED CIVIL ENGINEER DATE

PLANS APPROVAL DATE

REGISTERED PROFESSIONAL ENGINEER No. Exp. CIVIL STATE OF CALIFORNIA

THE STATE OF CALIFORNIA OR ITS OFFICERS OR AGENTS SHALL NOT BE RESPONSIBLE FOR THE ACCURACY OR COMPLETENESS OF ELECTRONIC COPIES OF THIS PLAN SHEET.

SANBAG
1170 WEST 3RD STREET
2ND FLOOR
SAN BERNARDINO, CA 92410

AECOM
999 W. TOWN & COUNTRY RD
ORANGE, CA 92868

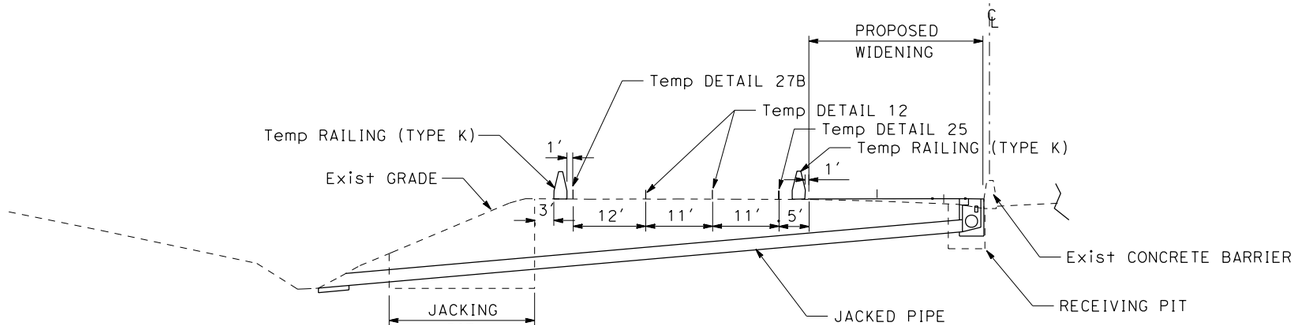

SECTION B2-B2
NOT TO SCALE

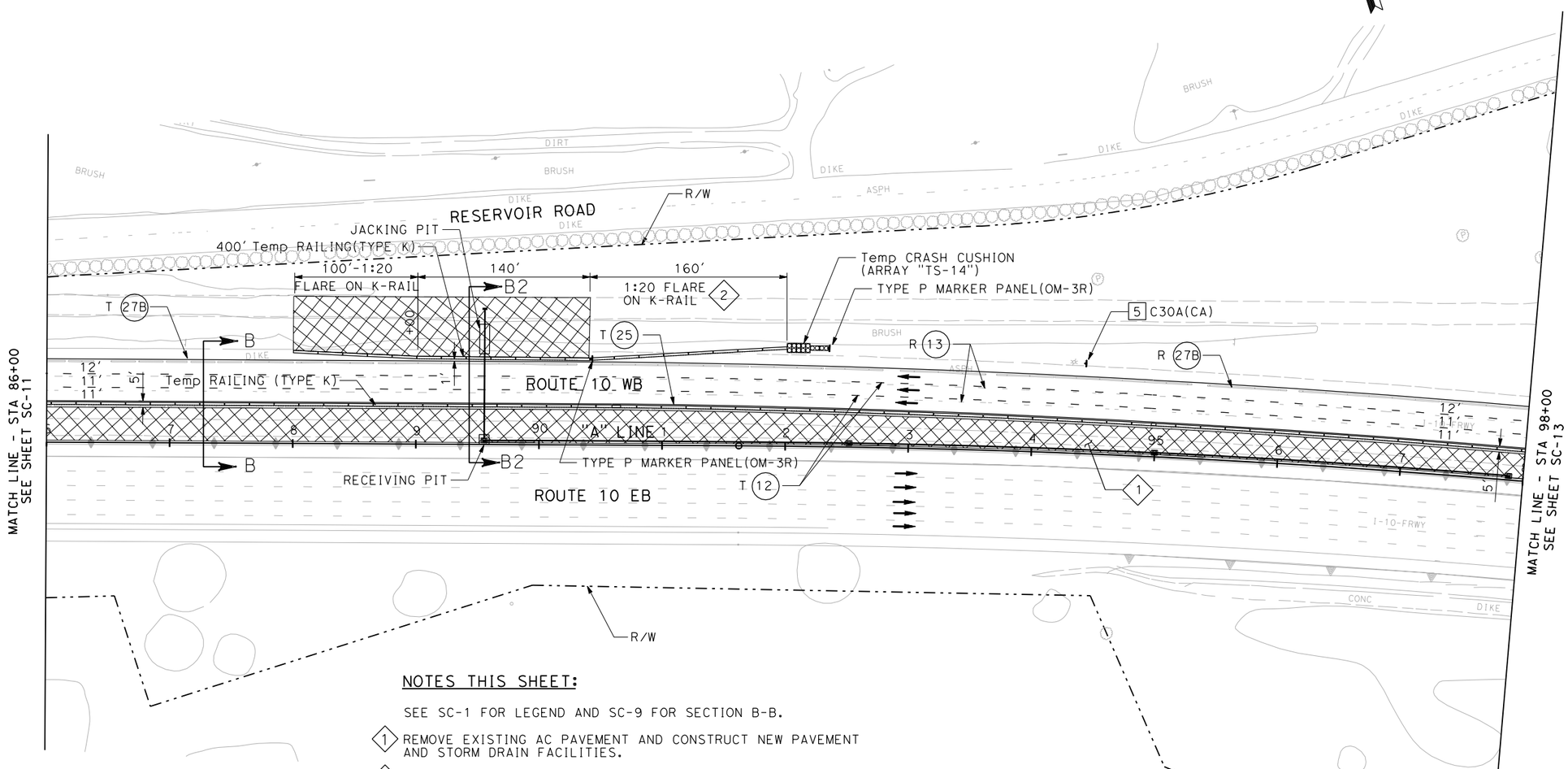

NOTES THIS SHEET:

SEE SC-1 FOR LEGEND AND SC-9 FOR SECTION B-B.

1. REMOVE EXISTING AC PAVEMENT AND CONSTRUCT NEW PAVEMENT AND STORM DRAIN FACILITIES.
2. CONTRACTOR SHALL PROVIDE Temp GRADING TO CREATE A FLAT SURFACE FOR K-RAIL AND CRASH CUSHION PLACEMENT

THIS PLAN ACCURATE FOR TRAFFIC HANDLING ONLY

TRAFFIC CONSTRUCTION AND TRAFFIC HANDLING PLAN STAGE 2

SCALE 1"=50'

SC-12

REVISED BY	DATE REVISED

CALCULATED-DESIGNED BY
CHECKED BY

CONSULTANT FUNCTIONAL SUPERVISOR
ED KOUZI

STATE OF CALIFORNIA - DEPARTMENT OF TRANSPORTATION
Caltrans

LAST REVISION 00-00-00
DATE PLOTTED => 7/14/2009
TIME PLOTTED => 9:49:25 AM

RELATIVE BORDER SCALE IS IN INCHES 0 1 2 3

USERNAME => SmithJH
DGN FILE => ...\0f150ma012.dgn

CU 08220

EA 0F1500

Dist	COUNTY	ROUTE	POST MILES TOTAL PROJECT	SHEET No.	TOTAL SHEETS
8	SBd	10	33.3/R36.9	XXX	XXX

REGISTERED CIVIL ENGINEER DATE

PLANS APPROVAL DATE

REGISTERED PROFESSIONAL ENGINEER No. Exp. CIVIL STATE OF CALIFORNIA

THE STATE OF CALIFORNIA OR ITS OFFICERS OR AGENTS SHALL NOT BE RESPONSIBLE FOR THE ACCURACY OR COMPLETENESS OF ELECTRONIC COPIES OF THIS PLAN SHEET.

SANBAG
1170 WEST 3RD STREET
2ND FLOOR
SAN BERNARDINO, CA 92410

AECOM
999 W. TOWN & COUNTRY RD
ORANGE, CA 92868

NOTES THIS SHEET:

SEE SC-1 FOR LEGEND AND SC-9 FOR SECTION B-B.

1. REMOVE EXISTING AC PAVEMENT AND CONSTRUCT NEW PAVEMENT AND STORM DRAIN FACILITIES.
2. THE CONTRACTOR, WITH THE RESIDENT ENGINEER'S APPROVAL SHALL DETERMINED THE LOCATION AND LENGTH OF THE ACCESS POINTS TO CONSTRUCTION AREAS. THE ACCESS POINTS SHALL BE CLOSED BY REMOVABLE K-RAILS DURING NON-WORK HOURS. THE LANE ADJACENT TO THE K-RAIL SHALL BE CLOSED PER CALTRANS STD. PLAN T-15 DURING NON-PEAK TRAFFIC HOURS.

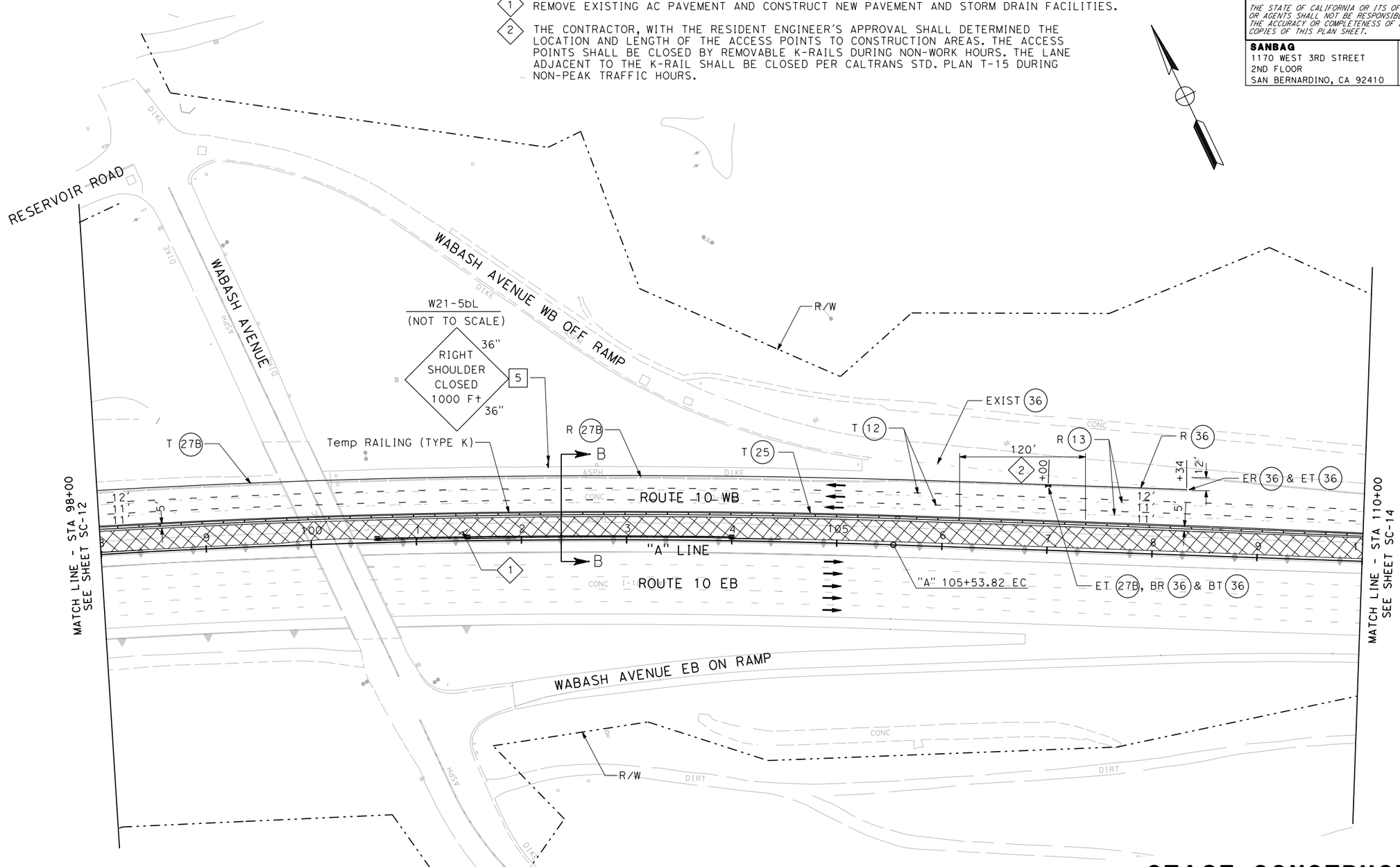

THIS PLAN ACCURATE FOR TRAFFIC HANDLING ONLY

STAGE CONSTRUCTION AND TRAFFIC HANDLING PLAN STAGE 2

SCALE 1"=50'

SC-13

REVISED BY	DATE REVISED

CALCULATED-DESIGNED BY

CHECKED BY

CONSULTANT FUNCTIONAL SUPERVISOR: ED KOUZI

STATE OF CALIFORNIA - DEPARTMENT OF TRANSPORTATION

Caltrans

LAST REVISION 00-00-00 | DATE PLOTTED => 7/14/2009 | TIME PLOTTED => 9:49:27 AM

RELATIVE BORDER SCALE IS IN INCHES 0 1 2 3

USERNAME => SmithJH
DGN FILE => ...\0f150ma013.dgn

CU 08220

EA 0F1500

Dist	COUNTY	ROUTE	POST MILES TOTAL PROJECT	SHEET No.	TOTAL SHEETS
8	SBd	10	33.3/R36.9	XXX	XXX

REGISTERED CIVIL ENGINEER DATE

PLANS APPROVAL DATE

REGISTERED PROFESSIONAL ENGINEER No. Exp. CIVIL STATE OF CALIFORNIA

THE STATE OF CALIFORNIA OR ITS OFFICERS OR AGENTS SHALL NOT BE RESPONSIBLE FOR THE ACCURACY OR COMPLETENESS OF ELECTRONIC COPIES OF THIS PLAN SHEET.

SANBAG
1170 WEST 3RD STREET
2ND FLOOR
SAN BERNARDINO, CA 92410

AECOM
999 W. TOWN & COUNTRY RD
ORANGE, CA 92868

NOTES THIS SHEET:

SEE SC-1 FOR LEGEND AND SC-9 FOR SECTION B-B.

(1) REMOVE EXISTING AC PAVEMENT AND CONSTRUCT NEW PAVEMENT.

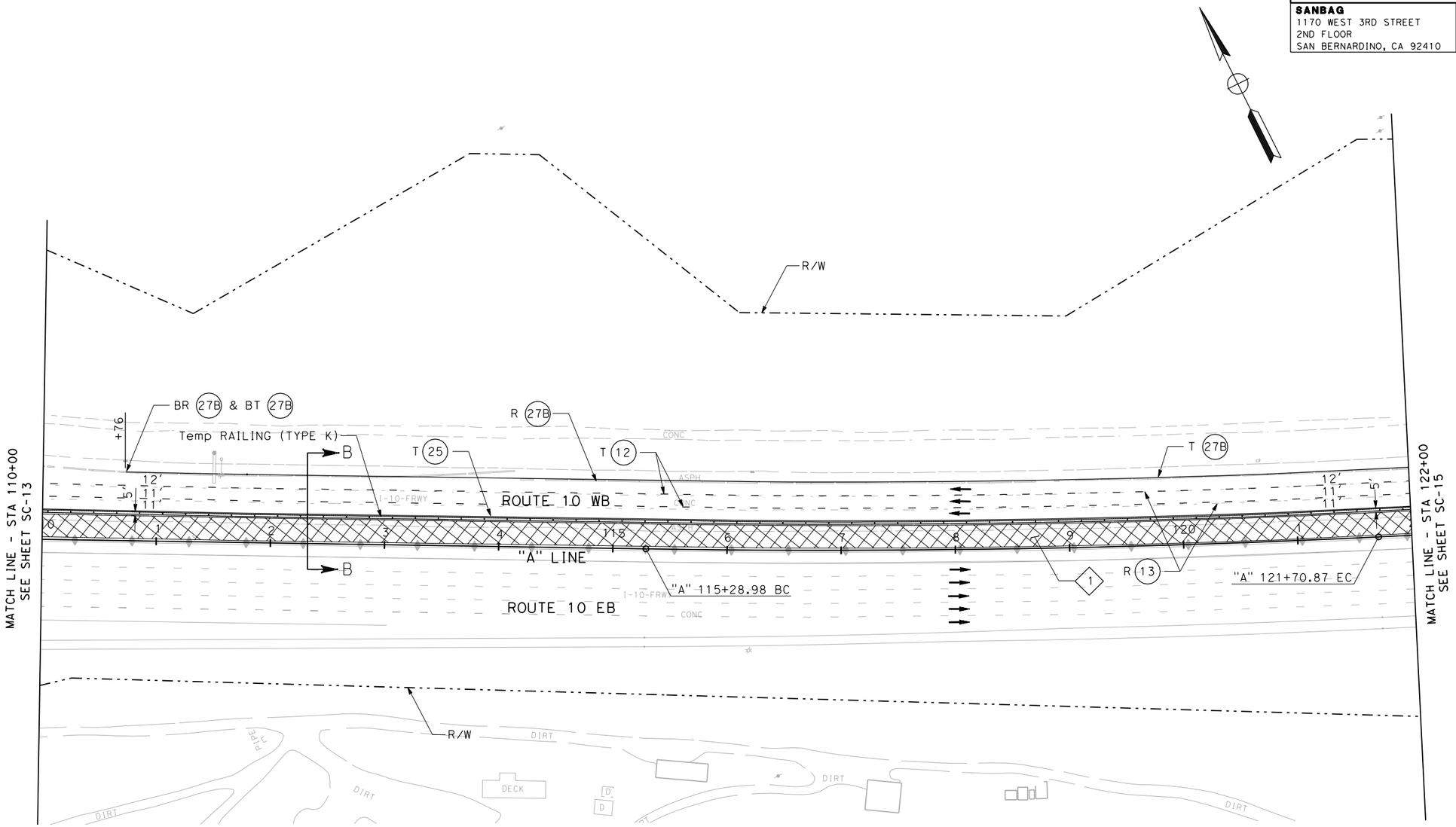

THIS PLAN ACCURATE FOR TRAFFIC HANDLING ONLY

STAGE CONSTRUCTION AND TRAFFIC HANDLING PLAN STAGE 2

SCALE 1"=50'

SC-14

REVISED BY	DATE REVISED

CALCULATED-DESIGNED BY

CHECKED BY

CONSULTANT FUNCTIONAL SUPERVISOR: ED KOUZI

STATE OF CALIFORNIA - DEPARTMENT OF TRANSPORTATION

Caltrans

LAST REVISION 00-00-00 | DATE PLOTTED => 7/14/2009 | TIME PLOTTED => 9:49:29 AM

RELATIVE BORDER SCALE IS IN INCHES 0 1 2 3

USERNAME => SmithJH
DGN FILE => ...\0f150ma014.dgn

CU 08220

EA 0F1500

Dist	COUNTY	ROUTE	POST MILES TOTAL PROJECT	SHEET No.	TOTAL SHEETS
8	SBd	10	33.3/R36.9	XXX	XXX

REGISTERED CIVIL ENGINEER DATE

PLANS APPROVAL DATE

REGISTERED PROFESSIONAL ENGINEER No. Exp. CIVIL STATE OF CALIFORNIA

THE STATE OF CALIFORNIA OR ITS OFFICERS OR AGENTS SHALL NOT BE RESPONSIBLE FOR THE ACCURACY OR COMPLETENESS OF ELECTRONIC COPIES OF THIS PLAN SHEET.

SANBAG
1170 WEST 3RD STREET
2ND FLOOR
SAN BERNARDINO, CA 92410

AECOM
999 W. TOWN & COUNTRY RD
ORANGE, CA 92868

NOTES THIS SHEET:

SEE SC-1 FOR LEGEND AND SC-9 FOR SECTION B-B.

1. REMOVE EXISTING AC PAVEMENT AND CONSTRUCT NEW PAVEMENT AND STORM DRAIN FACILITIES.
2. THE CONTRACTOR, WITH THE RESIDENT ENGINEER'S APPROVAL SHALL DETERMINED THE LOCATION AND LENGTH OF THE ACCESS POINTS TO CONSTRUCTION AREAS. THE ACCESS POINTS SHALL BE CLOSED BY REMOVABLE K-RAILS DURING NON-WORK HOURS. THE LANE ADJACENT TO THE K-RAIL SHALL BE CLOSED PER CALTRANS STD. PLAN T-15 DURING NON-PEAK TRAFFIC HOURS.

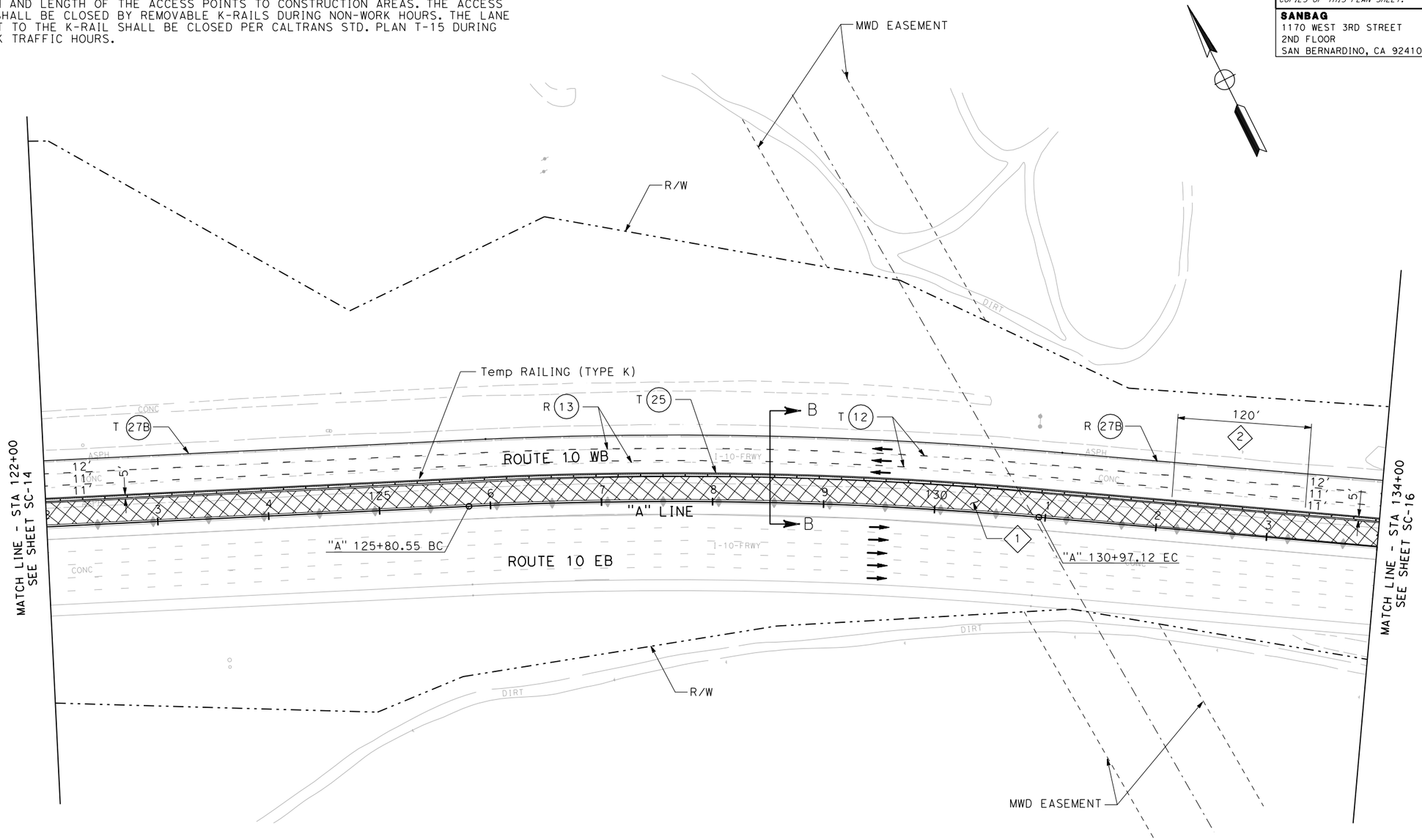

THIS PLAN IS ACCURATE FOR TRAFFIC HANDLING ONLY

STAGE CONSTRUCTION AND TRAFFIC HANDLING PLAN STAGE 2

SCALE 1"=50'

SC-15

STATE OF CALIFORNIA - DEPARTMENT OF TRANSPORTATION

Caltrans

CONSULTANT FUNCTIONAL SUPERVISOR: ED KOUZI

CALCULATED-DESIGNED BY

CHECKED BY

REVISED BY

DATE REVISED

LAST REVISION 00-00-00

DATE PLOTTED => 7/14/2009
TIME PLOTTED => 9:49:31 AM

RELATIVE BORDER SCALE IS IN INCHES 0 1 2 3

USERNAME => SmithJH
DGN FILE => ...\0f150ma015.dgn

CU 08220

EA 0F1500

Dist	COUNTY	ROUTE	POST MILES TOTAL PROJECT	SHEET No.	TOTAL SHEETS
8	SBd	10	33.3/R36.9	XXX	XXX

REGISTERED CIVIL ENGINEER DATE

PLANS APPROVAL DATE

REGISTERED PROFESSIONAL ENGINEER No. Exp. CIVIL STATE OF CALIFORNIA

THE STATE OF CALIFORNIA OR ITS OFFICERS OR AGENTS SHALL NOT BE RESPONSIBLE FOR THE ACCURACY OR COMPLETENESS OF ELECTRONIC COPIES OF THIS PLAN SHEET.

SANBAG
1170 WEST 3RD STREET
2ND FLOOR
SAN BERNARDINO, CA 92410

AECOM
999 W. TOWN & COUNTRY RD
ORANGE, CA 92868

NOTES THIS SHEET:

SEE SC-1 FOR LEGEND AND SC-9 FOR SECTION B-B.

1. REMOVE EXISTING AC PAVEMENT AND CONSTRUCT NEW PAVEMENT AND STORM DRAIN FACILITIES.
2. THE CONTRACTOR, WITH THE RESIDENT ENGINEER'S APPROVAL SHALL DETERMINED THE LOCATION AND LENGTH OF THE ACCESS POINTS TO CONSTRUCTION AREAS. THE ACCESS POINTS SHALL BE CLOSED BY REMOVABLE K-RAILS DURING NON-WORK HOURS. THE LANE ADJACENT TO THE K-RAIL SHALL BE CLOSED PER CALTRANS STD. PLAN T-15 DURING NON-PEAK TRAFFIC HOURS.

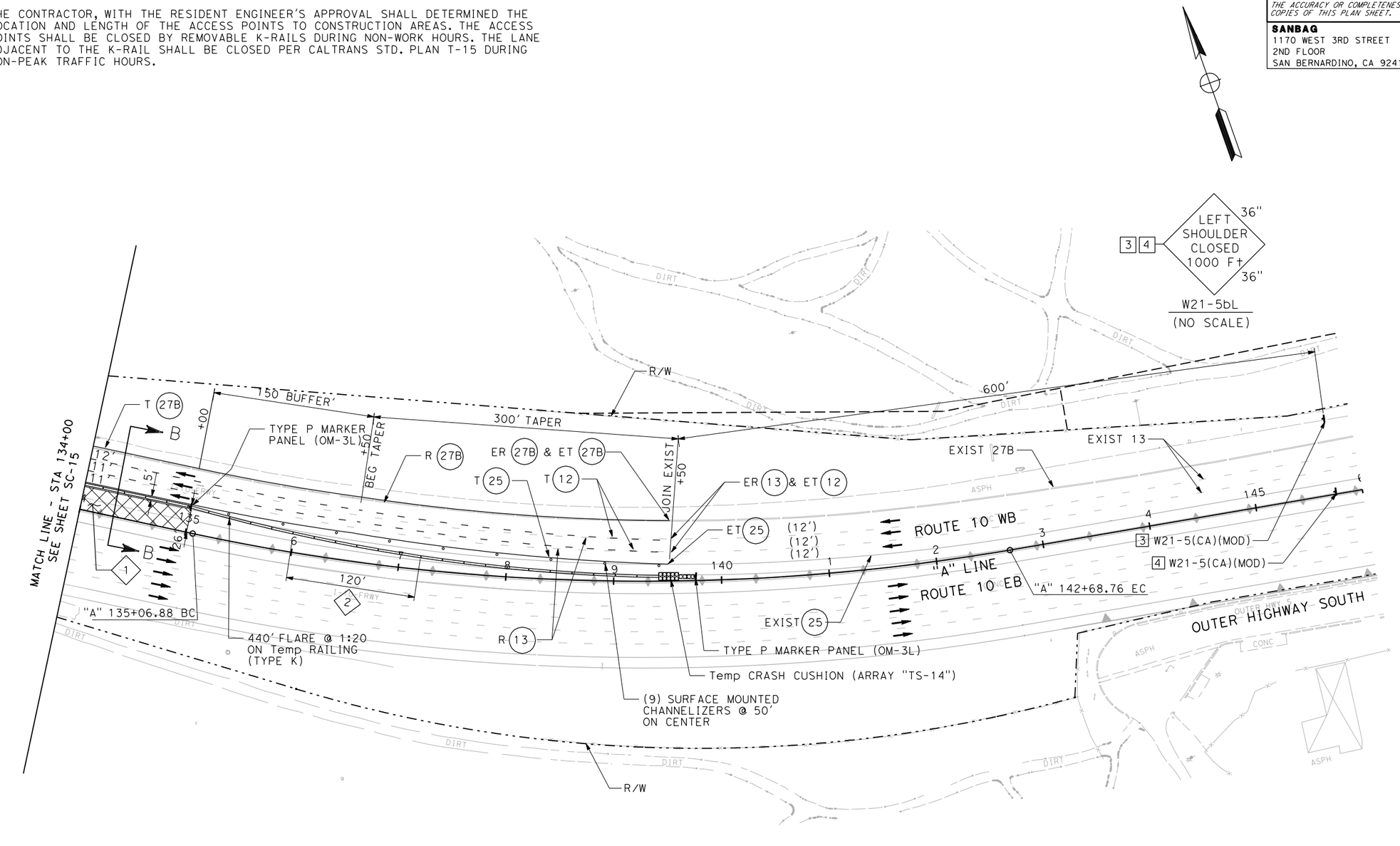

THIS PLAN IS ACCURATE FOR TRAFFIC HANDLING ONLY

STAGE CONSTRUCTION AND TRAFFIC HANDLING PLAN STAGE 2

SCALE 1"=50'

SC-16

REVISED BY	DATE REVISED

CALCULATED-DESIGNED BY
CHECKED BY

CONSULTANT FUNCTIONAL SUPERVISOR: ED KOUZI

STATE OF CALIFORNIA - DEPARTMENT OF TRANSPORTATION

Caltrans

LAST REVISION 00-00-00 | DATE PLOTTED => 7/14/2009 | TIME PLOTTED => 9:49:35 AM

RELATIVE BORDER SCALE IS IN INCHES 0 1 2 3

USERNAME => SmithJH
DGN FILE => ...\0f150ma016.dgn

CU 08220

EA 0F1500

Dist	COUNTY	ROUTE	POST MILES TOTAL PROJECT	SHEET No.	TOTAL SHEETS
8	SBd	10	33.3/R36.9	XXX	XXX

REGISTERED CIVIL ENGINEER DATE

PLANS APPROVAL DATE

REGISTERED PROFESSIONAL ENGINEER No. Exp. CIVIL STATE OF CALIFORNIA

THE STATE OF CALIFORNIA OR ITS OFFICERS OR AGENTS SHALL NOT BE RESPONSIBLE FOR THE ACCURACY OR COMPLETENESS OF ELECTRONIC COPIES OF THIS PLAN SHEET.

SANBAG
1170 WEST 3RD STREET
2ND FLOOR
SAN BERNARDINO, CA 92410

AECOM
999 W. TOWN & COUNTRY RD
ORANGE, CA 92868

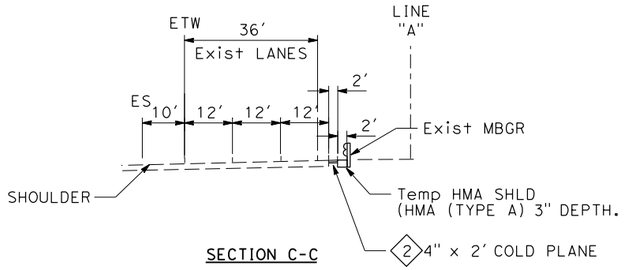

SECTION C-C

NOT TO SCALE
STA 212+00 TO STA 235+45±

NOTES:

1. HMA SHOULDER RECONSTRUCTION SHALL BE PERFORMED PRIOR TO SHIFTING LANES TO THE INSIDE IN STAGE 4.
2. 4" HMA SHOULDER RECONSTRUCTION DOES NOT APPLY TO SHOULDERS ON BRIDGE STRUCTURES.
3. HMA SHOULDER RECONSTRUCTION SHALL BE PERFORMED DURING NIGHT CLOSURE OF THE #1 WB LANE.

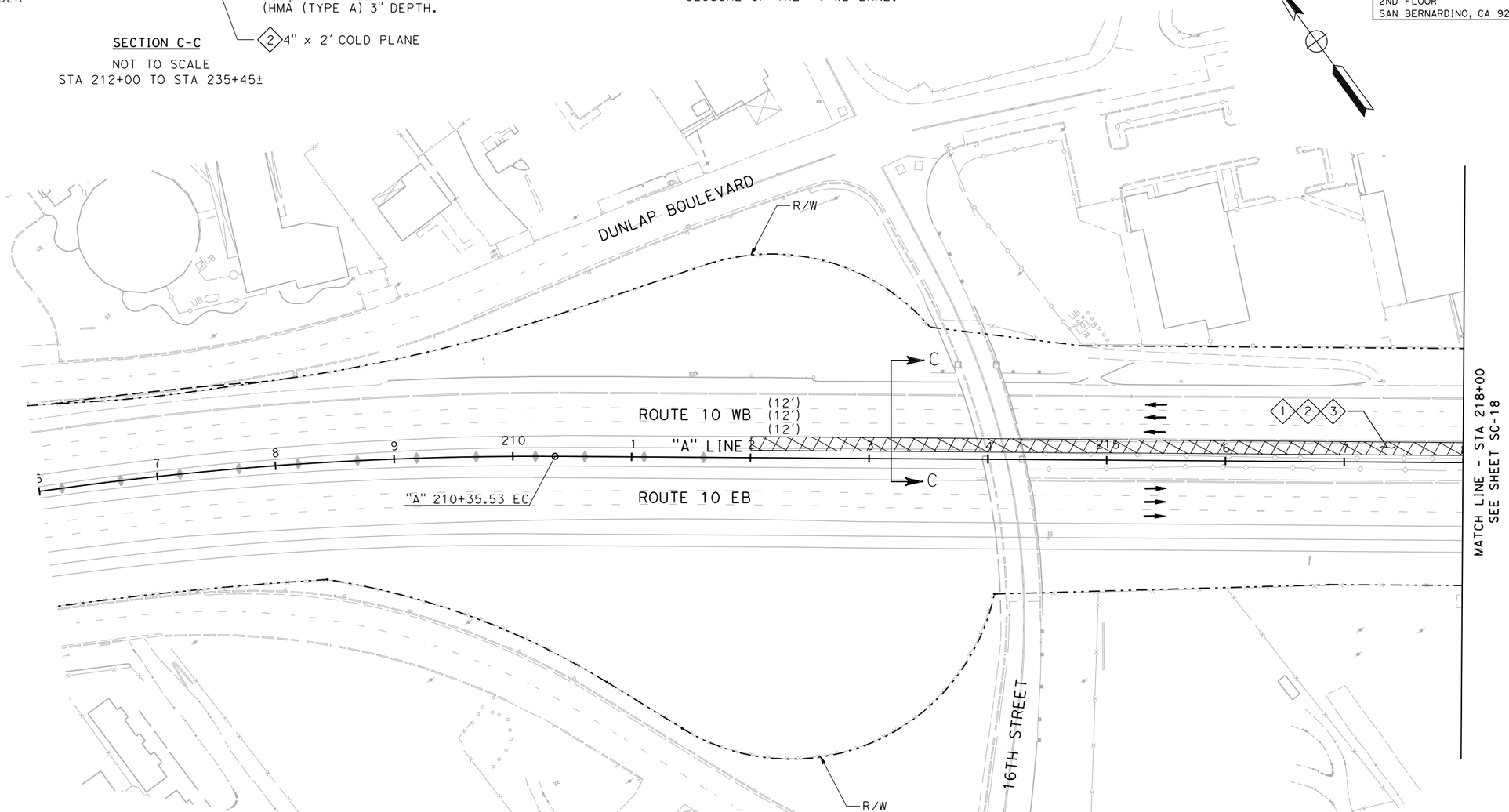

NOTES THIS SHEET:

SEE SC-1 FOR LEGEND.

SECTION C-C APPLIES TO SHEETS SC-17 THROUGH SC-19.

1 MEDIAN SHOULDER RECONSTRUCTION.

2 HMA (TYPE A) 4" DEPTH.

THIS PLAN IS ACCURATE FOR TRAFFIC HANDLING ONLY

STAGE CONSTRUCTION AND TRAFFIC HANDLING PLAN STAGE 3

SCALE 1"=50'

SC-17

STATE OF CALIFORNIA - DEPARTMENT OF TRANSPORTATION

Caltrans

CONSULTANT FUNCTIONAL SUPERVISOR: ED KOUZI

CALCULATED-DESIGNED BY

CHECKED BY

REVISED BY

DATE REVISED

LAST REVISION 00-00-00

DATE PLOTTED => 7/14/2009
TIME PLOTTED => 9:49:37 AM

RELATIVE BORDER SCALE IS IN INCHES 0 1 2 3

USERNAME => SmithJH
DGN FILE => ...\0f150ma017.dgn

CU 08220

EA 0F1500

Dist	COUNTY	ROUTE	POST MILES TOTAL PROJECT	SHEET No.	TOTAL SHEETS
8	SBd	10	33.3/R36.9	XXX	XXX

REGISTERED CIVIL ENGINEER DATE

PLANS APPROVAL DATE

REGISTERED PROFESSIONAL ENGINEER No. Exp. CIVIL STATE OF CALIFORNIA

THE STATE OF CALIFORNIA OR ITS OFFICERS OR AGENTS SHALL NOT BE RESPONSIBLE FOR THE ACCURACY OR COMPLETENESS OF ELECTRONIC COPIES OF THIS PLAN SHEET.

SANBAG
1170 WEST 3RD STREET
2ND FLOOR
SAN BERNARDINO, CA 92410

AECOM
999 W. TOWN & COUNTRY RD
ORANGE, CA 92868

NOTES THIS SHEET:

SEE SC-1 FOR LEGEND AND SC-17 FOR SECTION C-C AND APPLICABLE NOTES.

1. MEDIAN SHOULDER RECONSTRUCTION.
2. HMA (TYPE A) 4" DEPTH.

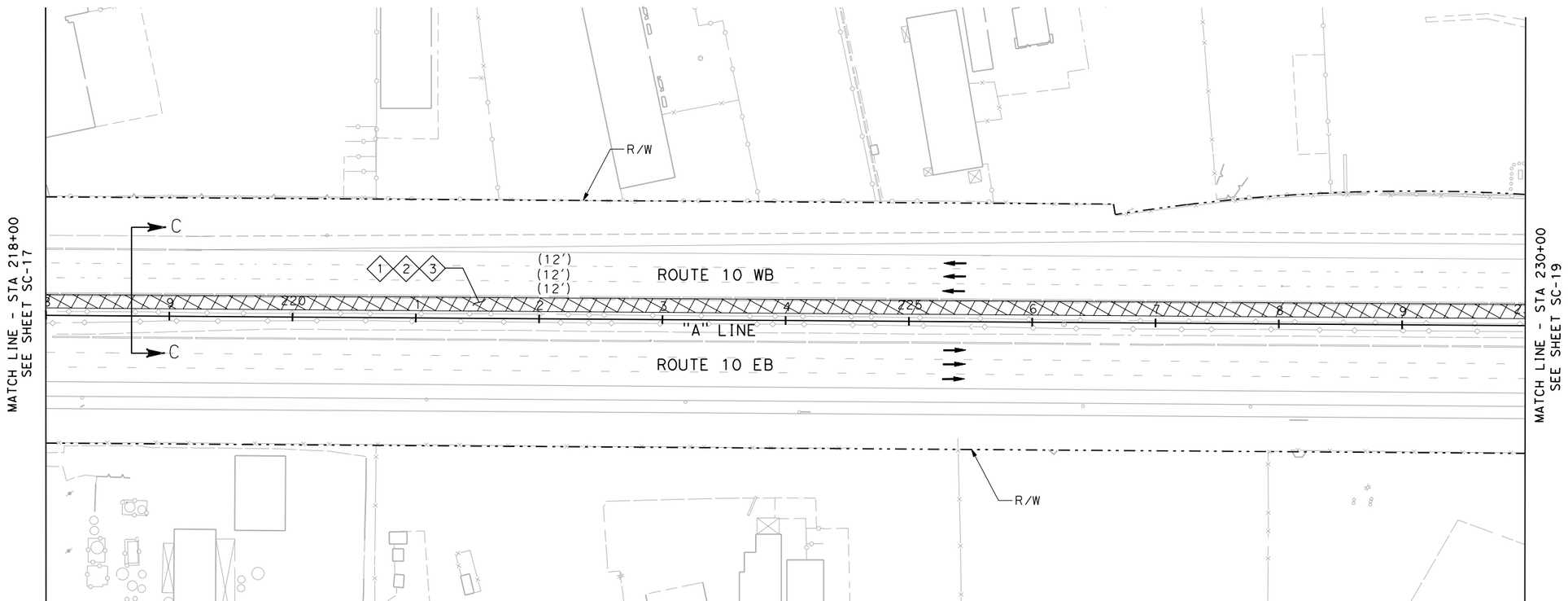

THIS PLAN IS ACCURATE FOR TRAFFIC HANDLING ONLY

STAGE CONSTRUCTION AND TRAFFIC HANDLING PLAN STAGE 3

SCALE 1"=50'

SC-18

STATE OF CALIFORNIA - DEPARTMENT OF TRANSPORTATION

Caltrans

CONSULTANT FUNCTIONAL SUPERVISOR: ED KOUZI

CALCULATED-DESIGNED BY

CHECKED BY

REVISED BY

DATE REVISED

LAST REVISION 00-00-00

DATE PLOTTED => 7/14/2009
TIME PLOTTED => 9:49:38 AM

RELATIVE BORDER SCALE IS IN INCHES 0 1 2 3

USERNAME => SmithJH
DGN FILE => ...\0f150ma018.dgn

CU 08220

EA 0F1500

Dist	COUNTY	ROUTE	POST MILES TOTAL PROJECT	SHEET No.	TOTAL SHEETS
8	SBd	10	33.3/R36.9	XXX	XXX

REGISTERED CIVIL ENGINEER DATE

PLANS APPROVAL DATE

REGISTERED PROFESSIONAL ENGINEER No. Exp. CIVIL STATE OF CALIFORNIA

THE STATE OF CALIFORNIA OR ITS OFFICERS OR AGENTS SHALL NOT BE RESPONSIBLE FOR THE ACCURACY OR COMPLETENESS OF ELECTRONIC COPIES OF THIS PLAN SHEET.

SANBAG
1170 WEST 3RD STREET
2ND FLOOR
SAN BERNARDINO, CA 92410

AECOM
999 W. TOWN & COUNTRY RD
ORANGE, CA 92868

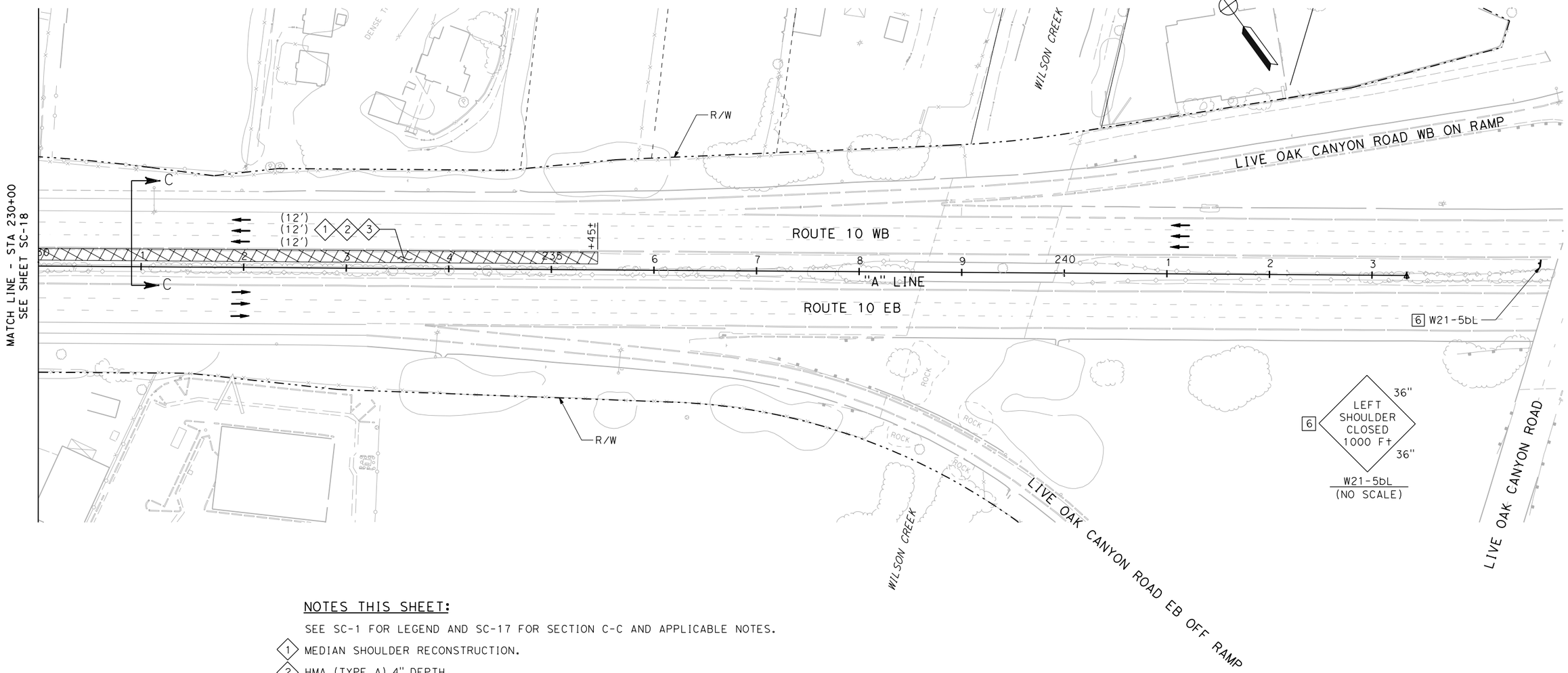

NOTES THIS SHEET:

SEE SC-1 FOR LEGEND AND SC-17 FOR SECTION C-C AND APPLICABLE NOTES.

1. MEDIAN SHOULDER RECONSTRUCTION.
2. HMA (TYPE A) 4" DEPTH.

THIS PLAN IS ACCURATE FOR TRAFFIC HANDLING ONLY

STAGE CONSTRUCTION AND TRAFFIC HANDLING PLAN STAGE 3

SCALE 1"=50'

SC-19

STATE OF CALIFORNIA - DEPARTMENT OF TRANSPORTATION

Caltrans

CONSULTANT FUNCTIONAL SUPERVISOR: ED KOUZI

CALCULATED-DESIGNED BY

CHECKED BY

REVISED BY

DATE REVISED

LAST REVISION 00-00-00

DATE PLOTTED => 7/14/2009
TIME PLOTTED => 9:49:40 AM

RELATIVE BORDER SCALE IS IN INCHES 0 1 2 3

USERNAME => SmithJH
DGN FILE => ...\0f150ma019.dgn

CU 08220

EA 0F1500

Dist	COUNTY	ROUTE	POST MILES TOTAL PROJECT	SHEET No.	TOTAL SHEETS
8	SBd	10	33.3/R36.9	XXX	XXX

REGISTERED CIVIL ENGINEER DATE

PLANS APPROVAL DATE

REGISTERED PROFESSIONAL ENGINEER No. Exp. CIVIL STATE OF CALIFORNIA

THE STATE OF CALIFORNIA OR ITS OFFICERS OR AGENTS SHALL NOT BE RESPONSIBLE FOR THE ACCURACY OR COMPLETENESS OF ELECTRONIC COPIES OF THIS PLAN SHEET.

SANBAG
1170 WEST 3RD STREET
2ND FLOOR
SAN BERNARDINO, CA 92410

AECOM
999 W. TOWN & COUNTRY RD
ORANGE, CA 92868

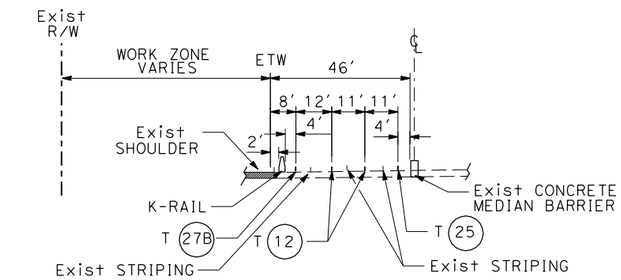

SECTION D-D
NOT TO SCALE
STA 131+00 TO STA 150+00
STA 177+00 TO STA 206+00

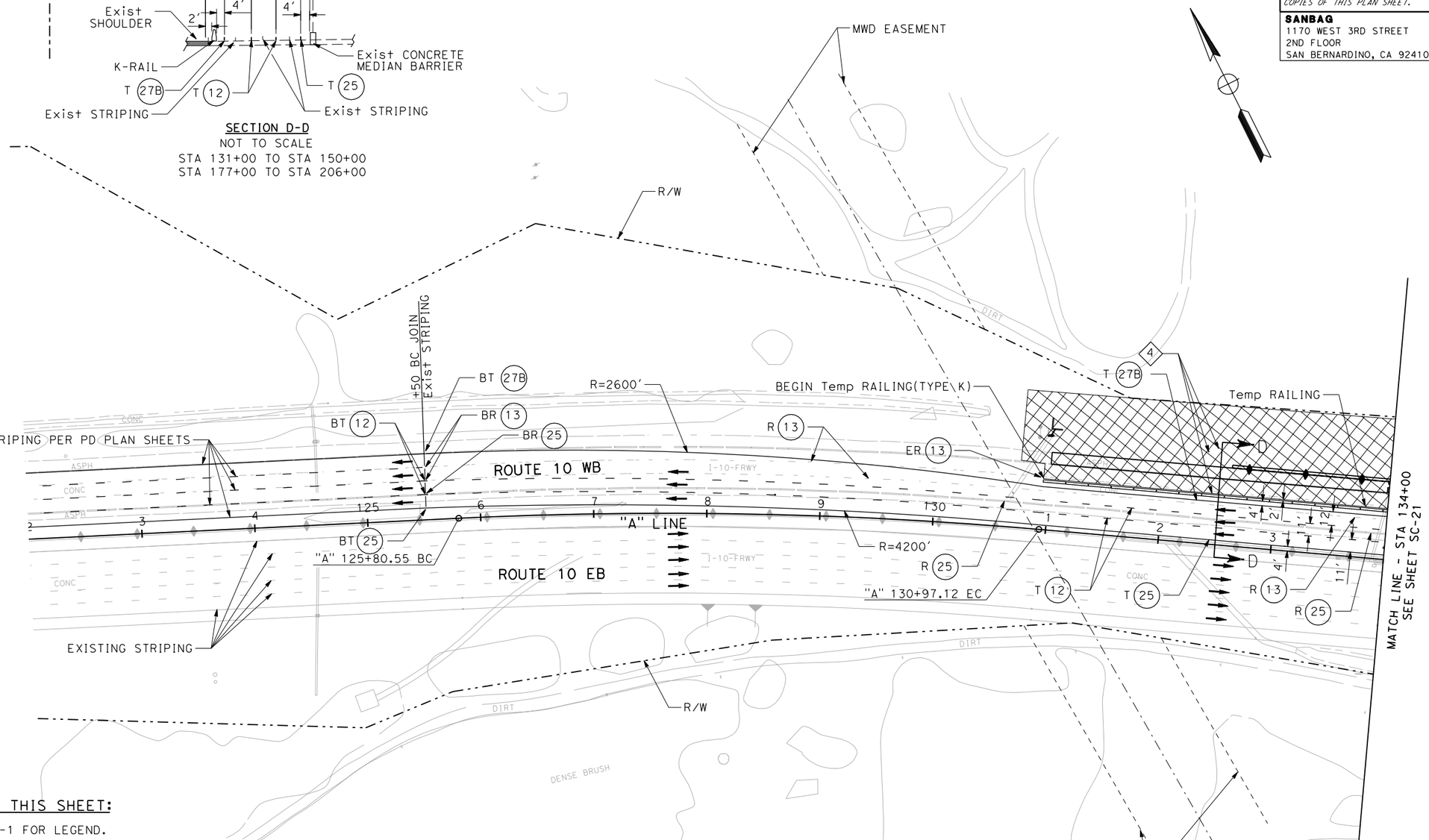

NOTES THIS SHEET:

SEE SC-1 FOR LEGEND.

SECTION D-D APPLIES TO SHEETS SC-20 THROUGH SC-29.

4 CONSTRUCT NEW PAVEMENT, RETAINING WALL AND STORM DRAIN FACILITIES.

THIS PLAN IS ACCURATE FOR TRAFFIC HANDLING ONLY

STAGE CONSTRUCTION AND TRAFFIC HANDLING PLAN STAGE 4

SCALE 1"=50'

SC-20

STATE OF CALIFORNIA - DEPARTMENT OF TRANSPORTATION

Caltrans

CONSULTANT FUNCTIONAL SUPERVISOR: ED KOUZI

CALCULATED-DESIGNED BY | CHECKED BY

REVISED BY | DATE REVISED

LAST REVISION 00-00-00 | DATE PLOTTED => 7/14/2009 | TIME PLOTTED => 9:49:44 AM

RELATIVE BORDER SCALE IS IN INCHES 0 1 2 3

USERNAME => SmithJH
DGN FILE => ...\0f150ma020.dgn

CU 08220 | EA 0F1500

Dist	COUNTY	ROUTE	POST MILES TOTAL PROJECT	SHEET No.	TOTAL SHEETS
8	SBd	10	33.3/R36.9	XXX	XXX

REGISTERED CIVIL ENGINEER DATE

PLANS APPROVAL DATE

REGISTERED PROFESSIONAL ENGINEER No. Exp. CIVIL STATE OF CALIFORNIA

THE STATE OF CALIFORNIA OR ITS OFFICERS OR AGENTS SHALL NOT BE RESPONSIBLE FOR THE ACCURACY OR COMPLETENESS OF ELECTRONIC COPIES OF THIS PLAN SHEET.

SANBAG
1170 WEST 3RD STREET
2ND FLOOR
SAN BERNARDINO, CA 92410

AECOM
999 W. TOWN & COUNTRY RD
ORANGE, CA 92868

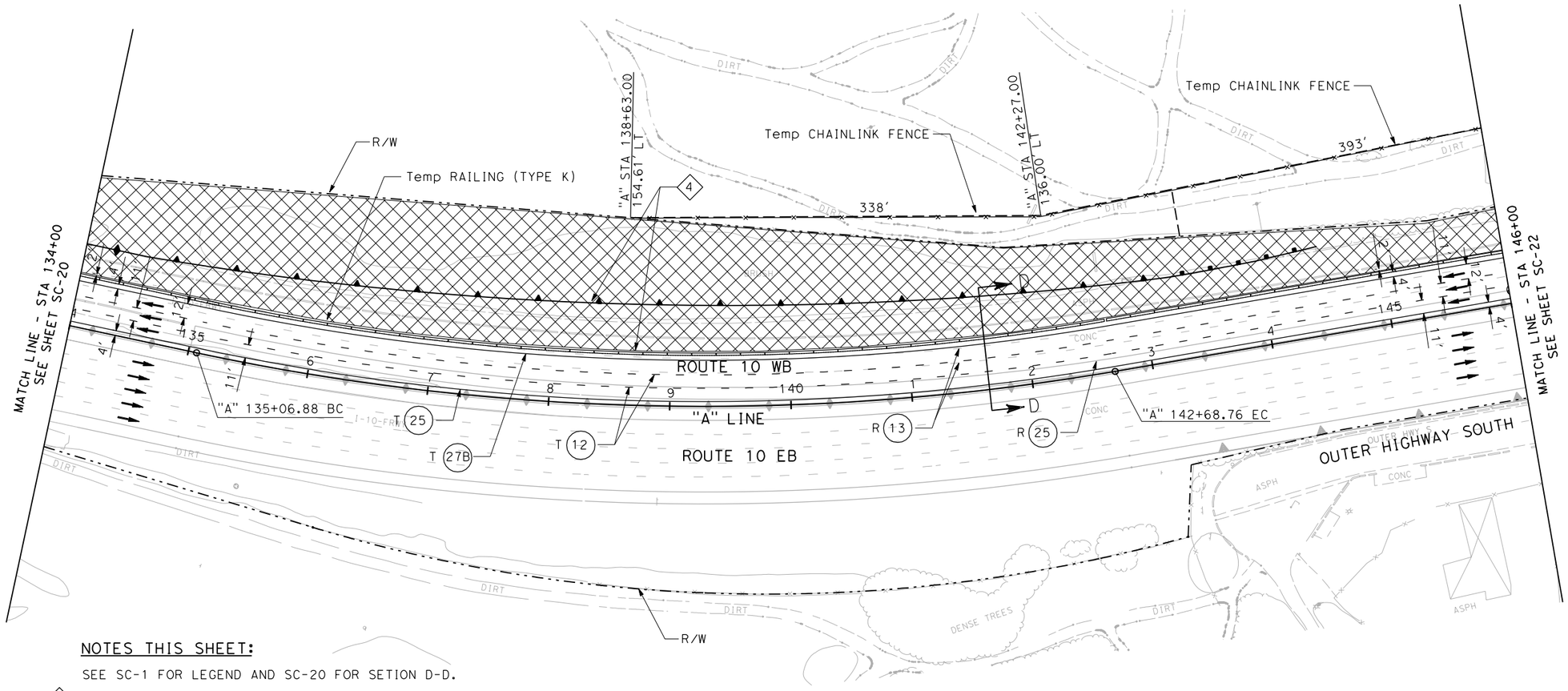

NOTES THIS SHEET:

SEE SC-1 FOR LEGEND AND SC-20 FOR SETION D-D.

4 CONSTRUCT NEW PAVEMENT, RETAINING WALL AND STORM DRAIN FACILITIES.

THIS PLAN IS ACCURATE FOR TRAFFIC HANDLING ONLY

STAGE CONSTRUCTION AND TRAFFIC HANDLING PLAN STAGE 4

SCALE 1"=50'

SC-21

STATE OF CALIFORNIA - DEPARTMENT OF TRANSPORTATION

Caltrans

CONSULTANT FUNCTIONAL SUPERVISOR: ED KOUZI

CALCULATED-DESIGNED BY

CHECKED BY

REVISED BY

DATE REVISED

LAST REVISION 00-00-00

DATE PLOTTED => 7/14/2009
TIME PLOTTED => 9:49:46 AM

RELATIVE BORDER SCALE IS IN INCHES 0 1 2 3

USERNAME => SmithJH
DGN FILE => ...\0f150ma021.dgn

CU 08220

EA 0F1500

Dist	COUNTY	ROUTE	POST MILES TOTAL PROJECT	SHEET No.	TOTAL SHEETS
8	SBd	10	33.3/R36.9	XXX	XXX

REGISTERED CIVIL ENGINEER DATE

PLANS APPROVAL DATE

REGISTERED PROFESSIONAL ENGINEER No. Exp. CIVIL STATE OF CALIFORNIA

THE STATE OF CALIFORNIA OR ITS OFFICERS OR AGENTS SHALL NOT BE RESPONSIBLE FOR THE ACCURACY OR COMPLETENESS OF ELECTRONIC COPIES OF THIS PLAN SHEET.

SANBAG
1170 WEST 3RD STREET
2ND FLOOR
SAN BERNARDINO, CA 92410

AECOM
999 W. TOWN & COUNTRY RD
ORANGE, CA 92868

NOTES THIS SHEET:

SEE SC-1 FOR LEGEND AND SC-20 FOR SECTION D-D.

4. CONSTRUCT NEW PAVEMENT, RETAINING WALL AND STORM DRAIN FACILITIES.
5. CONCRETE BARRIER FROM STA 156+72 TO 162+00 TO BE BUILT IN STAGE 6.
6. INSTALL K-RAIL AFTER COMPLETION OF SHOULDER WORK SHOWN BY NOTE 7.
7. CONSTRUCT 8" TEMPORARY PAVEMENT (TYPE A) TO FACILITATE STAGE 4 RAMP WORK SHOWN ON SC-23.
8. CLOSE #3 THROUGH LANE WITH MOVING LANE CLOSURE PER CALTRANS STD PLAN T15.
9. CLOSE ON RAMP PER DE-1.

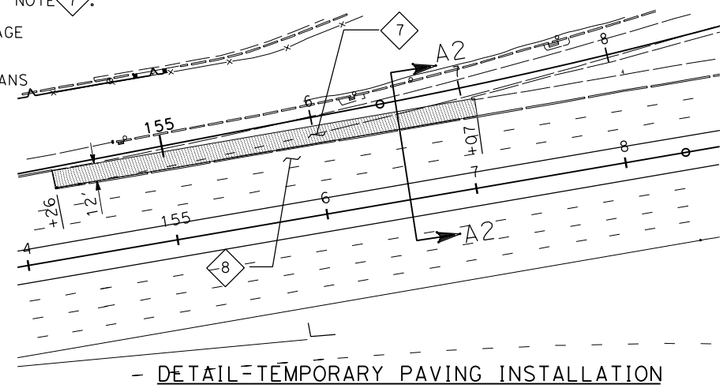

DETAIL-TEMPORARY PAVING INSTALLATION

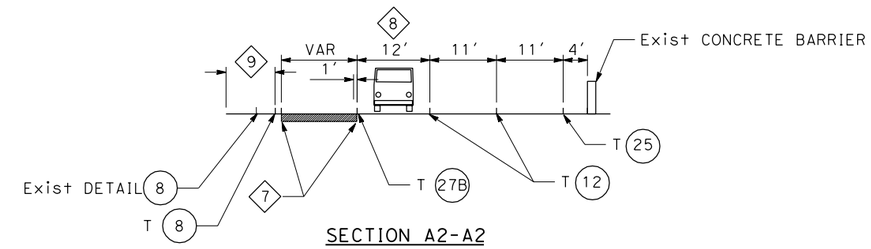

SECTION A2-A2
NOT TO SCALE

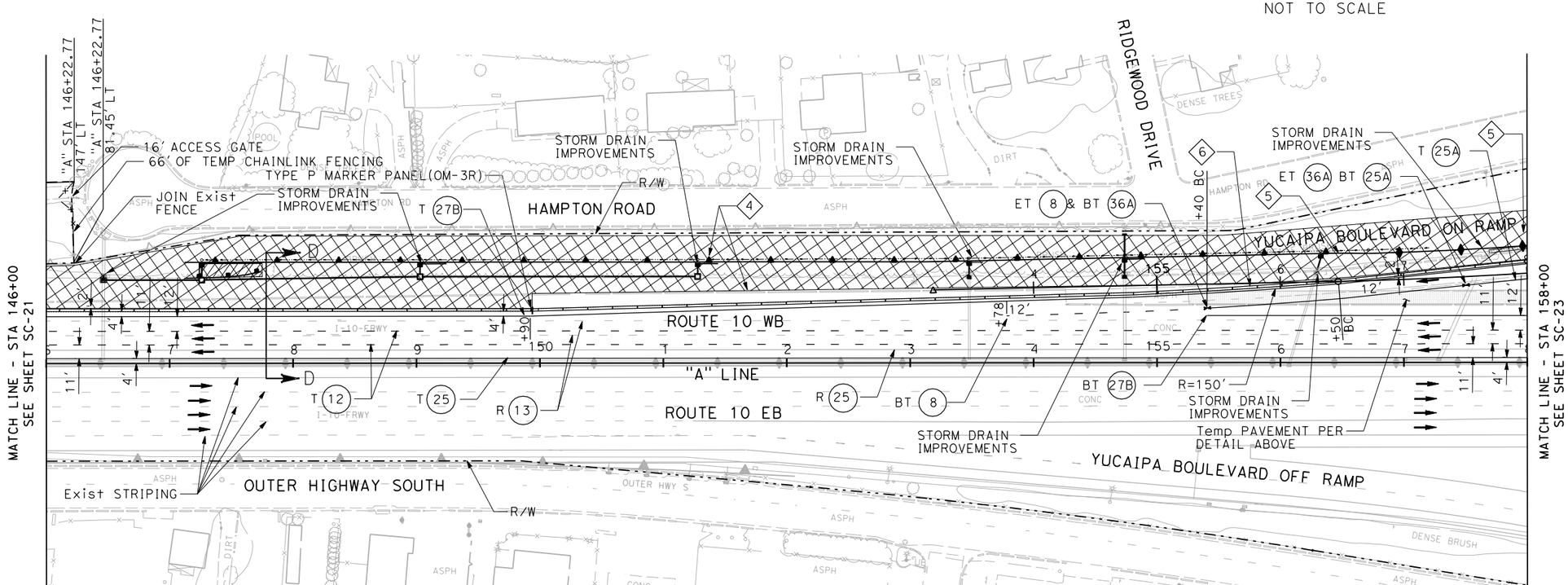

THIS PLAN IS ACCURATE FOR TRAFFIC HANDLING ONLY

STAGE CONSTRUCTION AND TRAFFIC HANDLING PLAN STAGE 4

SCALE 1"=50'

SC-22

STATE OF CALIFORNIA - DEPARTMENT OF TRANSPORTATION

Caltrans

CONSULTANT FUNCTIONAL SUPERVISOR: ED KOUZI

CALCULATED-DESIGNED BY

CHECKED BY

REVISED BY

DATE REVISED

LAST REVISION 00-00-00

DATE PLOTTED => 7/14/2009
TIME PLOTTED => 9:49:48 AM

RELATIVE BORDER SCALE IS IN INCHES 0 1 2 3

USERNAME => SmithJH
DGN FILE => ...\0f150ma022.dgn

CU 08220

EA 0F1500

Dist	COUNTY	ROUTE	POST MILES TOTAL PROJECT	SHEET No.	TOTAL SHEETS
8	SBd	10	33.3/R36.9	XXX	XXX

REGISTERED CIVIL ENGINEER DATE

PLANS APPROVAL DATE

REGISTERED PROFESSIONAL ENGINEER No. Exp. CIVIL STATE OF CALIFORNIA

THE STATE OF CALIFORNIA OR ITS OFFICERS OR AGENTS SHALL NOT BE RESPONSIBLE FOR THE ACCURACY OR COMPLETENESS OF ELECTRONIC COPIES OF THIS PLAN SHEET.

SANBAG
1170 WEST 3RD STREET
2ND FLOOR
SAN BERNARDINO, CA 92410

AECOM
999 W. TOWN & COUNTRY RD
ORANGE, CA 92868

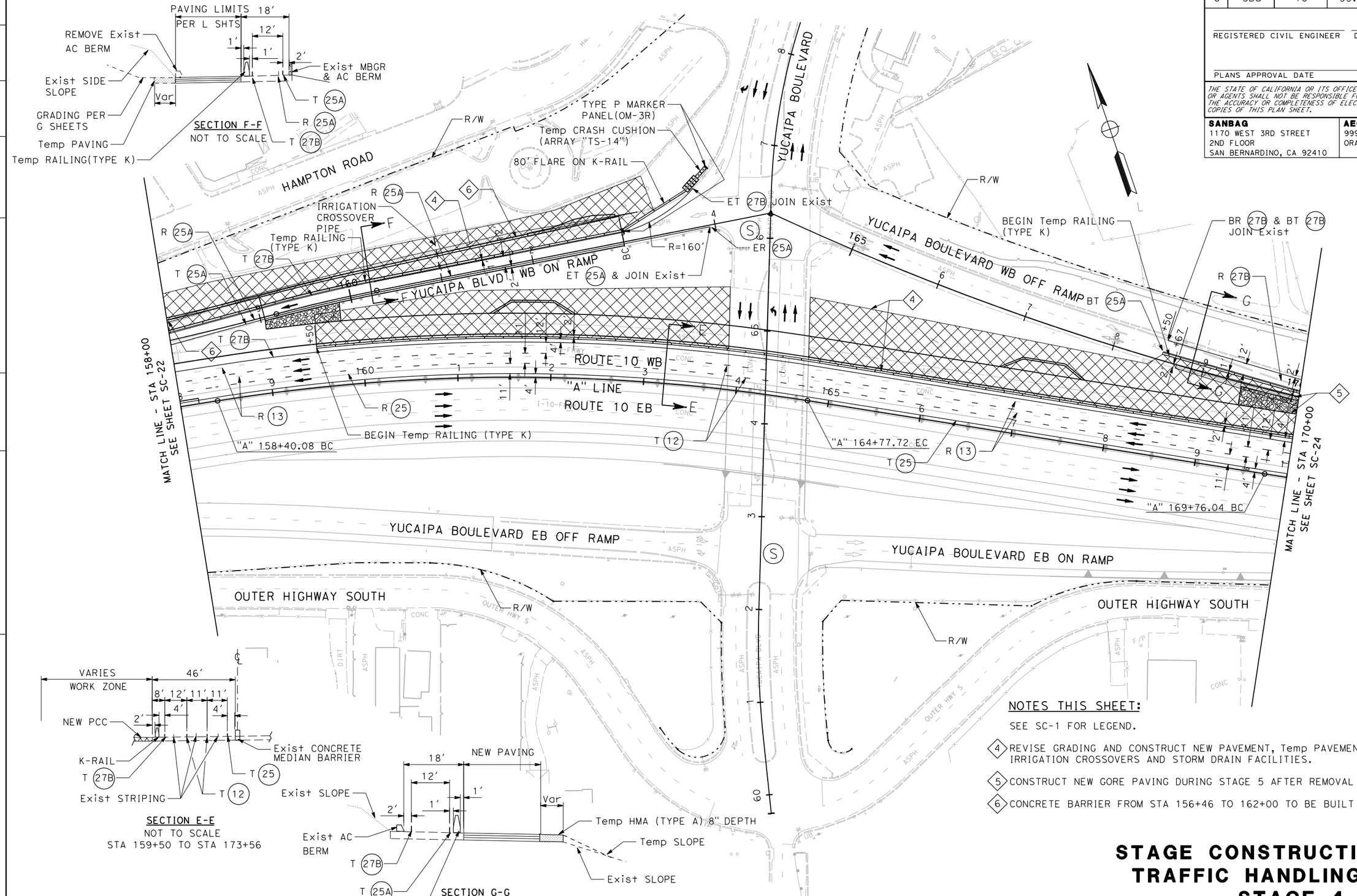

NOTES THIS SHEET:

SEE SC-1 FOR LEGEND.

4 REVISE GRADING AND CONSTRUCT NEW PAVEMENT, Temp PAVEMENT, SIDE SLOPE, IRRIGATION CROSSOVERS AND STORM DRAIN FACILITIES.

5 CONSTRUCT NEW GORE PAVING DURING STAGE 5 AFTER REMOVAL OF Temp PAVING.

6 CONCRETE BARRIER FROM STA 156+46 TO 162+00 TO BE BUILT IN STAGE 6.

THIS PLAN IS ACCURATE FOR TRAFFIC HANDLING ONLY

STAGE CONSTRUCTION AND TRAFFIC HANDLING PLAN STAGE 4

SCALE 1"=50′

SC-23

STATE OF CALIFORNIA - DEPARTMENT OF TRANSPORTATION

Caltrans

CONSULTANT FUNCTIONAL SUPERVISOR: ED KOUZI

CALCULATED-DESIGNED BY

CHECKED BY

REVISED BY

DATE REVISED

LAST REVISION 00-00-00

DATE PLOTTED => 7/14/2009
TIME PLOTTED => 9:49:51 AM

RELATIVE BORDER SCALE IS IN INCHES 0 1 2 3

USERNAME => SmithJH
DGN FILE => ...\0f150ma023.dgn

CU 08220

EA 0F1500

Dist	COUNTY	ROUTE	POST MILES TOTAL PROJECT	SHEET No.	TOTAL SHEETS
8	SBd	10	33.3/R36.9	XXX	XXX

REGISTERED CIVIL ENGINEER DATE

PLANS APPROVAL DATE

REGISTERED PROFESSIONAL ENGINEER No. Exp. CIVIL STATE OF CALIFORNIA

THE STATE OF CALIFORNIA OR ITS OFFICERS OR AGENTS SHALL NOT BE RESPONSIBLE FOR THE ACCURACY OR COMPLETENESS OF ELECTRONIC COPIES OF THIS PLAN SHEET.

SANBAG
1170 WEST 3RD STREET
2ND FLOOR
SAN BERNARDINO, CA 92410

AECOM
999 W. TOWN & COUNTRY RD
ORANGE, CA 92868

NOTES THIS SHEET:

SEE SC-1 FOR LEGEND AND SC-20 FOR SECTION D-D, SC-23 FOR SECTION E-E.

4. CONSTRUCT RETAINING WALL, DRAINAGE FACILITIES, PCC AND TEMPORARY AC PAVEMENT.
5. CONSTRUCT NEW GORE PAVING DURING STAGE 5 AFTER REMOVAL OF Temp PAVING.
6. MAINTAIN EXISTING OVERHEAD SIGN STRUCTURE AND SIGN PANEL DURING STAGES 4 AND 5

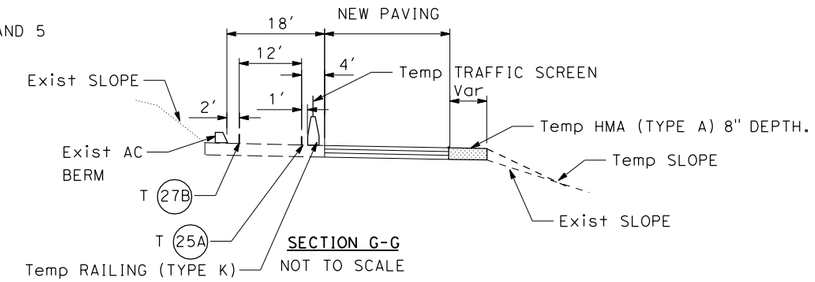

SECTION G-G
NOT TO SCALE

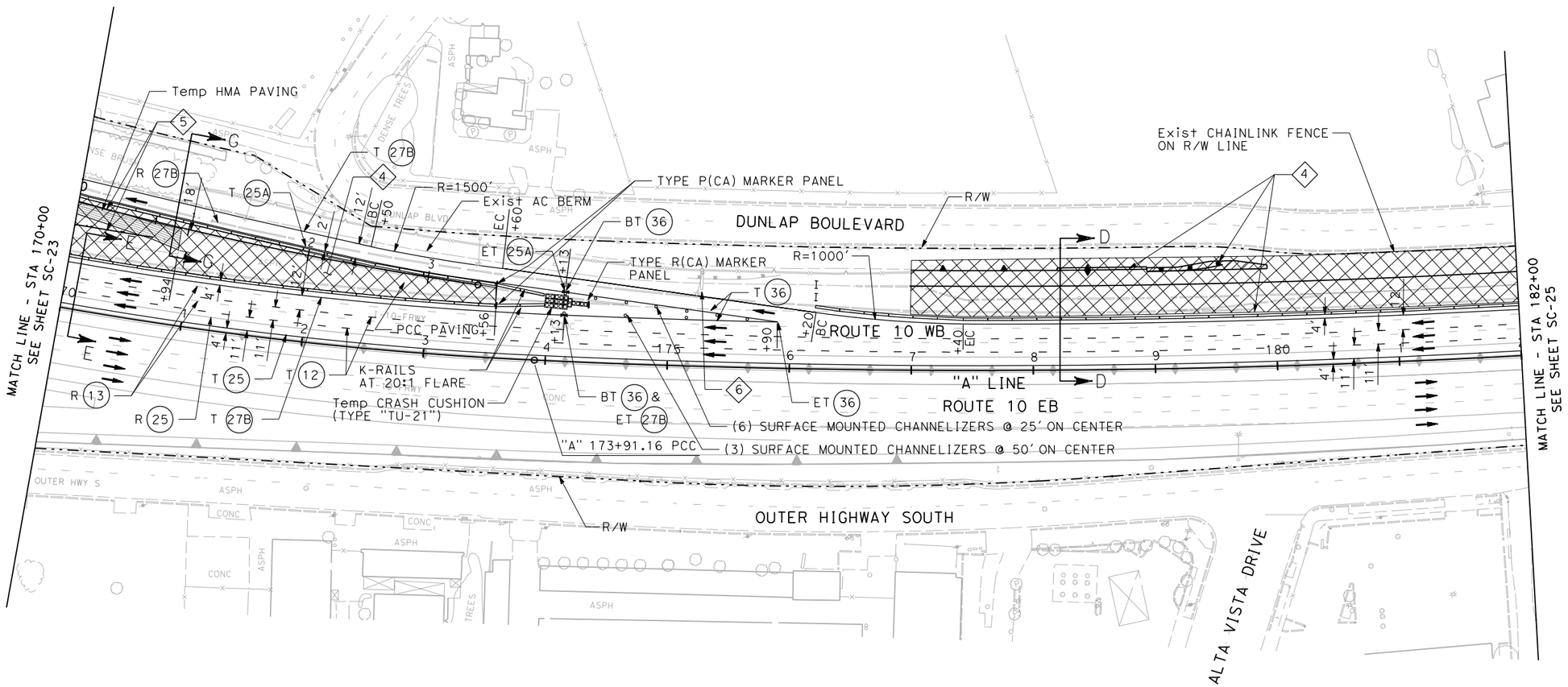

THIS PLAN IS ACCURATE FOR STAGE HANDLING ONLY

STAGE CONSTRUCTION AND TRAFFIC HANDLING PLAN STAGE 4

SCALE 1"=50'

SC-24

REVISED BY	DATE REVISED

CALCULATED-DESIGNED BY
CHECKED BY

CONSULTANT FUNCTIONAL SUPERVISOR
ED KOUZI

STATE OF CALIFORNIA - DEPARTMENT OF TRANSPORTATION
Caltrans

LAST REVISION 00-00-00
DATE PLOTTED => 7/14/2009
TIME PLOTTED => 9:49:53 AM

RELATIVE BORDER SCALE IS IN INCHES 0 1 2 3

USERNAME => SmithJH
DGN FILE => ...\0f150ma024.dgn

CU 08220

EA 0F1500

Dist	COUNTY	ROUTE	POST MILES TOTAL PROJECT	SHEET No.	TOTAL SHEETS
8	SBd	10	33.3/R36.9	XXX	XXX

REGISTERED CIVIL ENGINEER DATE

PLANS APPROVAL DATE

REGISTERED PROFESSIONAL ENGINEER No. Exp. CIVIL STATE OF CALIFORNIA

THE STATE OF CALIFORNIA OR ITS OFFICERS OR AGENTS SHALL NOT BE RESPONSIBLE FOR THE ACCURACY OR COMPLETENESS OF ELECTRONIC COPIES OF THIS PLAN SHEET.

SANBAG
1170 WEST 3RD STREET
2ND FLOOR
SAN BERNARDINO, CA 92410

AECOM
999 W. TOWN & COUNTRY RD
ORANGE, CA 92868

NOTES THIS SHEET:

SEE SC-1 FOR LEGEND AND SC-20 FOR SECTION D-D.

(4) CONSTRUCT NEW PAVEMENT, RETAINING WALL AND STORM DRAIN FACILITIES.

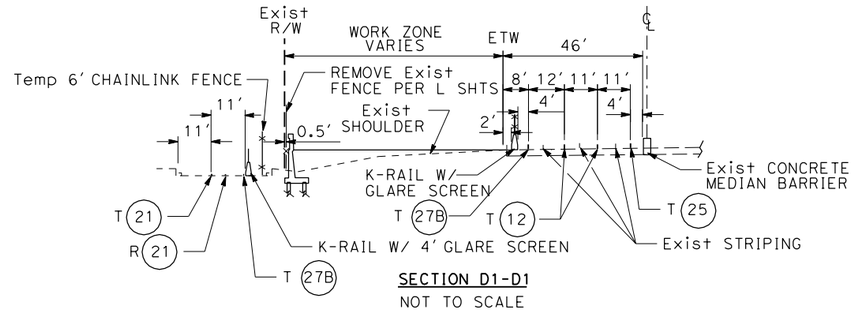

SECTION D1-D1
NOT TO SCALE

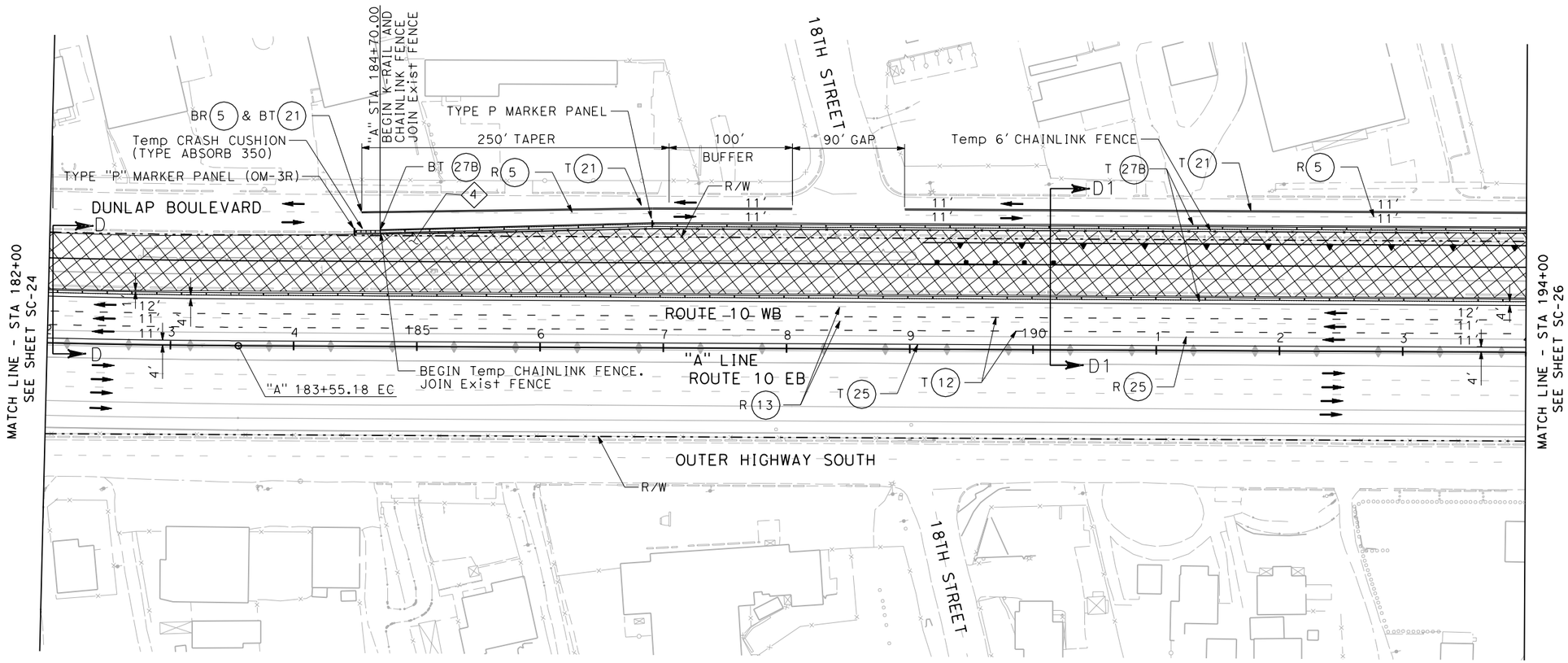

THIS PLAN IS ACCURATE FOR TRAFFIC HANDLING ONLY

STAGE CONSTRUCTION AND TRAFFIC HANDLING PLAN STAGE 4

SCALE 1"=50'

SC-25

REVISED BY	DATE REVISED

CALCULATED-DESIGNED BY
CHECKED BY

CONSULTANT FUNCTIONAL SUPERVISOR
ED KOUZI

STATE OF CALIFORNIA - DEPARTMENT OF TRANSPORTATION
Caltrans

LAST REVISION 00-00-00
DATE PLOTTED => 7/14/2009
TIME PLOTTED => 9:49:54 AM

RELATIVE BORDER SCALE IS IN INCHES 0 1 2 3

USERNAME => SmithJH
DGN FILE => ...\0f150ma025.dgn

CU 08220

EA 0F1500

Dist	COUNTY	ROUTE	POST MILES TOTAL PROJECT	SHEET No.	TOTAL SHEETS
8	SBd	10	33.3/R36.9	XXX	XXX

REGISTERED CIVIL ENGINEER DATE

PLANS APPROVAL DATE

REGISTERED PROFESSIONAL ENGINEER No. Exp. CIVIL STATE OF CALIFORNIA

THE STATE OF CALIFORNIA OR ITS OFFICERS OR AGENTS SHALL NOT BE RESPONSIBLE FOR THE ACCURACY OR COMPLETENESS OF ELECTRONIC COPIES OF THIS PLAN SHEET.

SANBAG
1170 WEST 3RD STREET
2ND FLOOR
SAN BERNARDINO, CA 92410

AECOM
999 W. TOWN & COUNTRY RD
ORANGE, CA 92868

NOTES:

SEE SC-1 FOR LEGEND AND SC-25 FOR SECTION D1-D1.

(4) CONSTRUCT NEW PAVEMENT, RETAINING WALL AND STORM DRAIN FACILITIES.

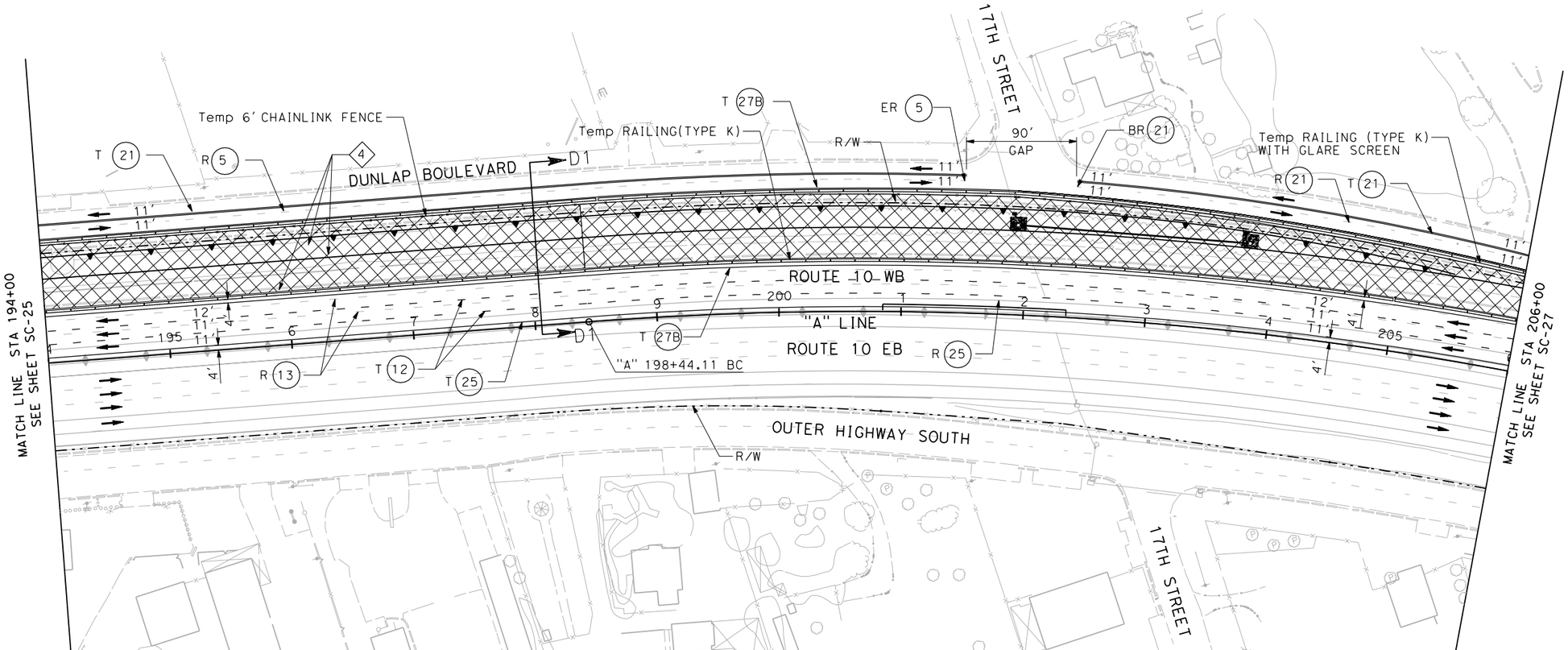

THIS PLAN IS ACCURATE FOR TRAFFIC HANDLING ONLY

STAGE CONSTRUCTION AND TRAFFIC HANDLING PLAN STAGE 4

SCALE 1"=50'

SC-26

STATE OF CALIFORNIA - DEPARTMENT OF TRANSPORTATION

Caltrans

CONSULTANT FUNCTIONAL SUPERVISOR: ED KOUZI

CALCULATED-DESIGNED BY

CHECKED BY

REVISED BY

DATE REVISED

LAST REVISION 00-00-00

DATE PLOTTED => 7/14/2009
TIME PLOTTED => 9:49:56 AM

RELATIVE BORDER SCALE IS IN INCHES 0 1 2 3

USERNAME => SmithJH
DGN FILE => ...\0f150ma026.dgn

CU 08220

EA 0F1500

Dist	COUNTY	ROUTE	POST MILES TOTAL PROJECT	SHEET No.	TOTAL SHEETS
8	SBd	10	33.3/R36.9	XXX	XXX

REGISTERED CIVIL ENGINEER DATE

PLANS APPROVAL DATE

REGISTERED PROFESSIONAL ENGINEER No. Exp. CIVIL STATE OF CALIFORNIA

THE STATE OF CALIFORNIA OR ITS OFFICERS OR AGENTS SHALL NOT BE RESPONSIBLE FOR THE ACCURACY OR COMPLETENESS OF ELECTRONIC COPIES OF THIS PLAN SHEET.

SANBAG
1170 WEST 3RD STREET
2ND FLOOR
SAN BERNARDINO, CA 92410

AECOM
999 W. TOWN & COUNTRY RD
ORANGE, CA 92868

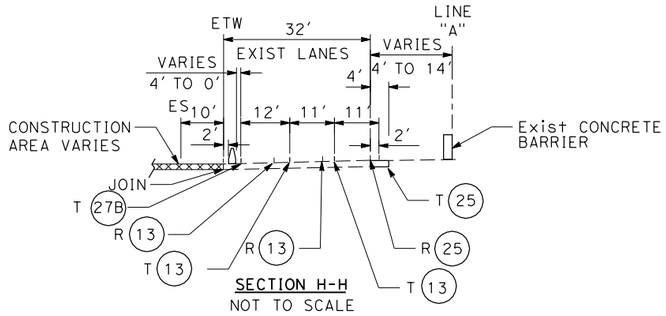

SECTION H-H
NOT TO SCALE
STA 206+00 TO STA 212+00

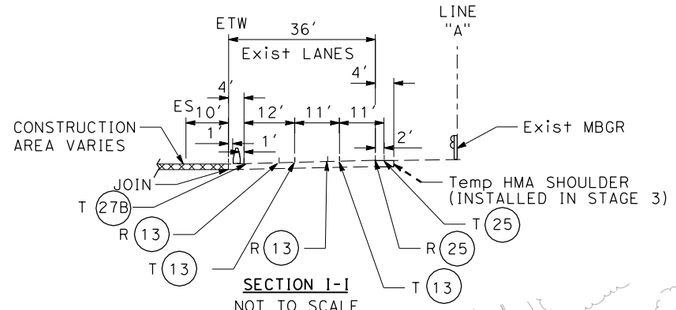

SECTION I-I
NOT TO SCALE
STA 212+00 TO STA 235+50

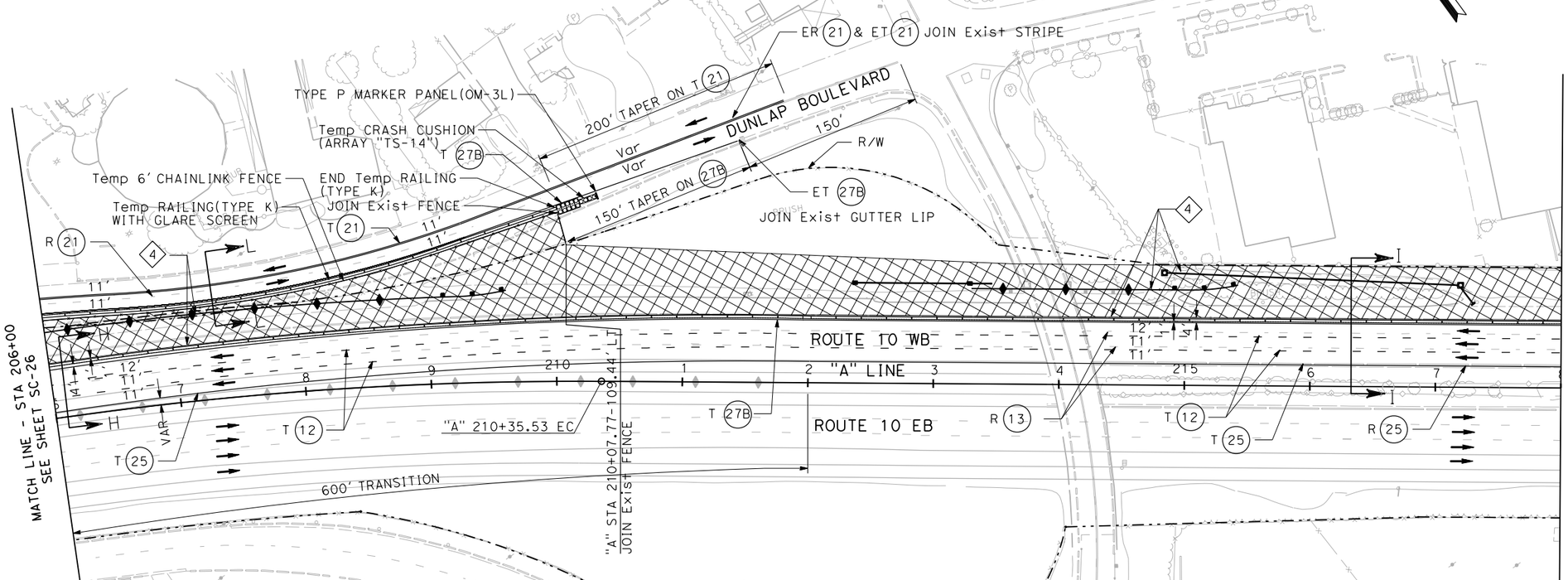

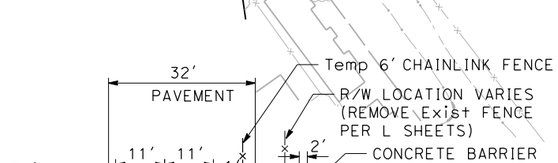

SECTION L-L
DUNLAP BLVD
NOT TO SCALE

NOTES THIS SHEET:

SEE SC-1 FOR LEGEND.

4 CONSTRUCT NEW PAVEMENT, RETAINING WALL AND STORM DRAIN FACILITIES.

THIS PLAN IS ACCURATE FOR TRAFFIC HANDLING ONLY

STAGE CONSTRUCTION AND TRAFFIC HANDLING PLAN STAGE 4

SCALE 1"=50'

SC-27

STATE OF CALIFORNIA - DEPARTMENT OF TRANSPORTATION

CONSULTANT FUNCTIONAL SUPERVISOR: ED KOUZI

CALCULATED-DESIGNED BY | CHECKED BY | REVISED BY | DATE REVISED

LAST REVISION 00-00-00 | DATE PLOTTED => 7/14/2009 | TIME PLOTTED => 9:49:58 AM

RELATIVE BORDER SCALE IS IN INCHES 0 1 2 3

USERNAME => SmithJH
DGN FILE => ...\0f150ma027.dgn

CU 08220 | EA 0F1500

Dist	COUNTY	ROUTE	POST MILES TOTAL PROJECT	SHEET No.	TOTAL SHEETS
8	SBd	10	33.3/R36.9	XXX	XXX

REGISTERED CIVIL ENGINEER DATE

PLANS APPROVAL DATE

REGISTERED PROFESSIONAL ENGINEER No. Exp. CIVIL STATE OF CALIFORNIA

THE STATE OF CALIFORNIA OR ITS OFFICERS OR AGENTS SHALL NOT BE RESPONSIBLE FOR THE ACCURACY OR COMPLETENESS OF ELECTRONIC COPIES OF THIS PLAN SHEET.

SANBAG
1170 WEST 3RD STREET
2ND FLOOR
SAN BERNARDINO, CA 92410

AECOM
999 W. TOWN & COUNTRY RD
ORANGE, CA 92868

NOTES:

SEE SC-1 FOR LEGEND AND SC-27 FOR SECTION I-I.

4 CONSTRUCT NEW PAVEMENT AND STORM DRAIN FACILITIES.

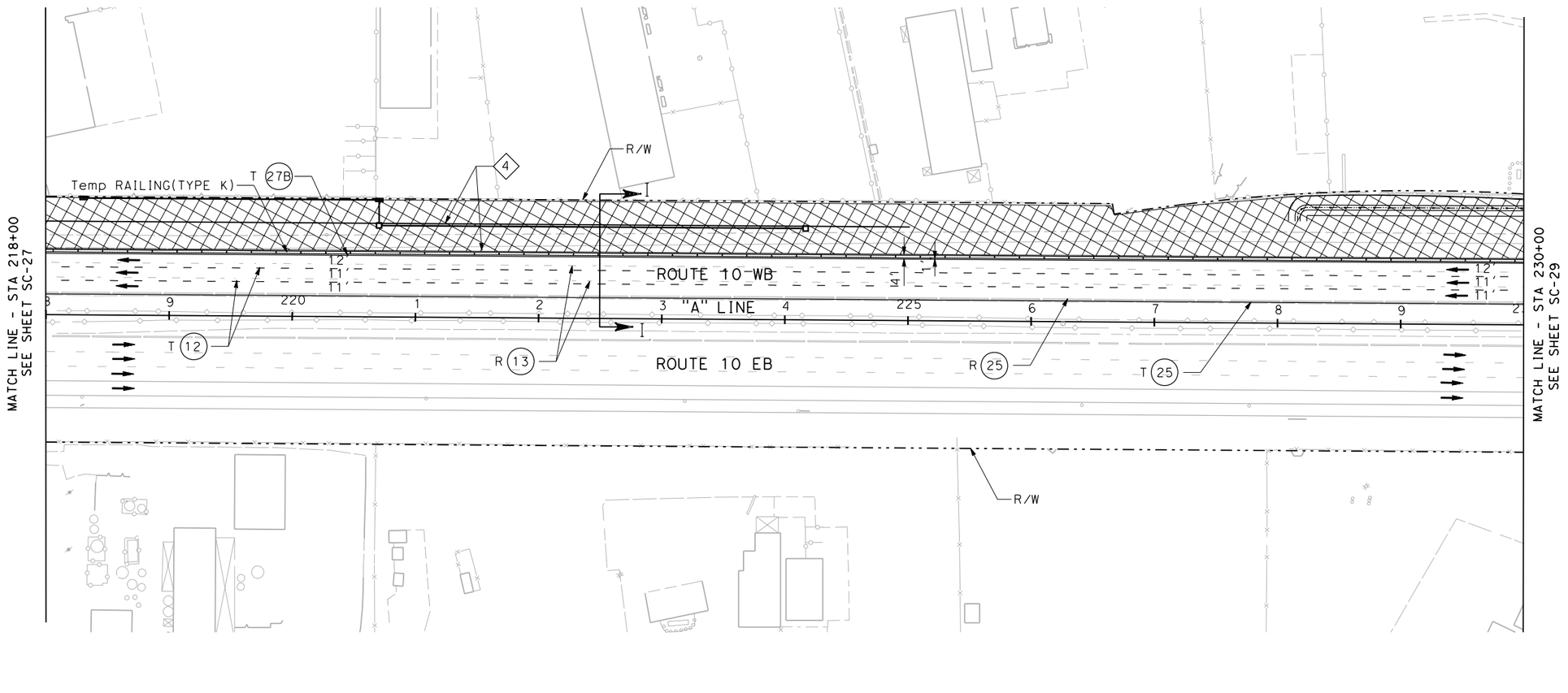

THIS PLAN IS ACCURATE FOR TRAFFIC HANDLING ONLY

STAGE CONSTRUCTION AND TRAFFIC HANDLING PLAN STAGE 4

SCALE 1"=50'

SC-28

STATE OF CALIFORNIA - DEPARTMENT OF TRANSPORTATION

Caltrans

CONSULTANT FUNCTIONAL SUPERVISOR: ED KOUZI

CALCULATED-DESIGNED BY

CHECKED BY

REVISED BY

DATE REVISED

LAST REVISION 00-00-00

DATE PLOTTED => 7/14/2009
TIME PLOTTED => 9:50:00 AM

RELATIVE BORDER SCALE IS IN INCHES 0 1 2 3

USERNAME => SmithJH
DGN FILE => ...\0f150ma028.dgn

CU 08220

EA 0F1500

Dist	COUNTY	ROUTE	POST MILES TOTAL PROJECT	SHEET No.	TOTAL SHEETS
8	SBd	10	33.3/R36.9	XXX	XXX

REGISTERED CIVIL ENGINEER DATE

PLANS APPROVAL DATE

REGISTERED PROFESSIONAL ENGINEER No. Exp. CIVIL STATE OF CALIFORNIA

THE STATE OF CALIFORNIA OR ITS OFFICERS OR AGENTS SHALL NOT BE RESPONSIBLE FOR THE ACCURACY OR COMPLETENESS OF ELECTRONIC COPIES OF THIS PLAN SHEET.

SANBAG
1170 WEST 3RD STREET
2ND FLOOR
SAN BERNARDINO, CA 92410

AECOM
999 W. TOWN & COUNTY RD
ORANGE, CA 92868

NOTES:

SEE SC-1 FOR LEGEND AND SC-27 FOR SECTION I-I.

(4) CONSTRUCT NEW PAVEMENT AND STORM DRAIN FACILITIES.

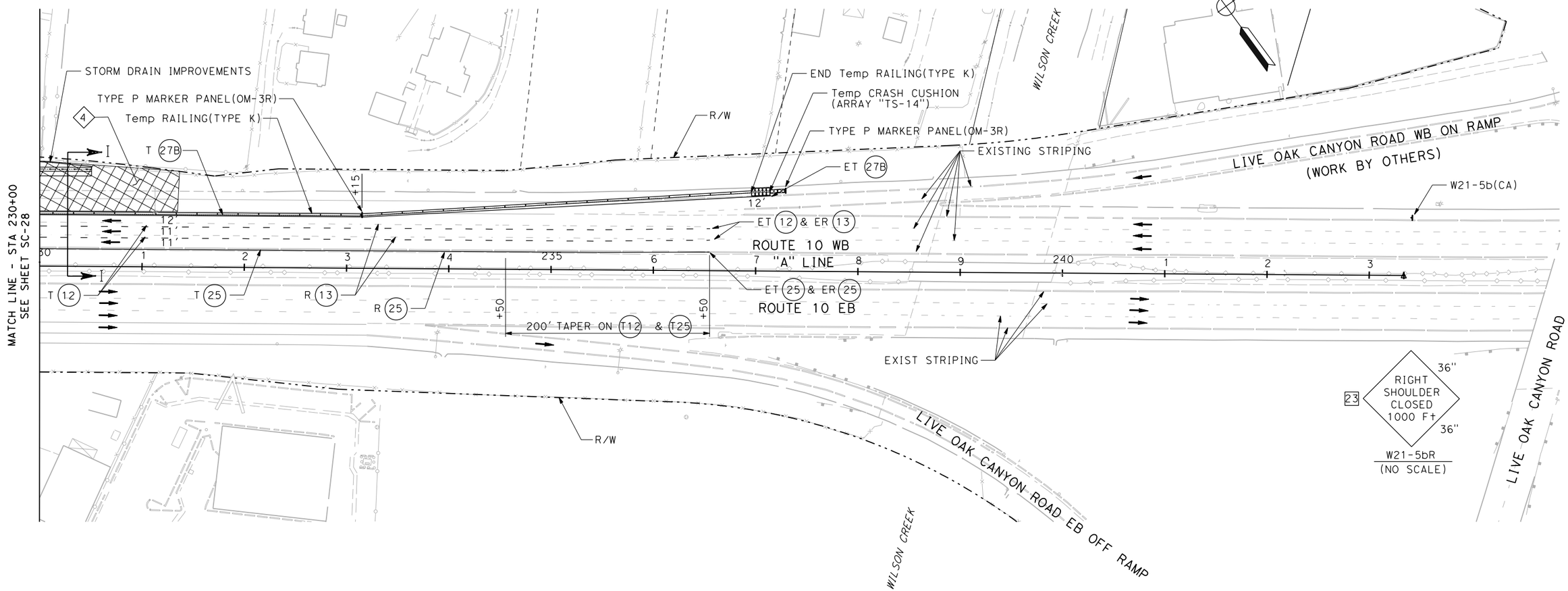

THIS PLAN IS ACCURATE FOR TRAFFIC HANDLING ONLY

STAGE CONSTRUCTION AND TRAFFIC HANDLING PLAN STAGE 4

SCALE 1"=50'

SC-29

REVISED BY	DATE REVISED

CALCULATED-DESIGNED BY	CHECKED BY

CONSULTANT FUNCTIONAL SUPERVISOR: ED KOUZI

STATE OF CALIFORNIA - DEPARTMENT OF TRANSPORTATION

Caltrans

LAST REVISION 00-00-00 | DATE PLOTTED => 7/14/2009 | TIME PLOTTED => 9:50:01 AM

RELATIVE BORDER SCALE IS IN INCHES 0 1 2 3

USERNAME => SmithJH
DGN FILE => ...\0f150ma029.dgn

CU 08220

EA 0F1500

Dist	COUNTY	ROUTE	POST MILES TOTAL PROJECT	SHEET No.	TOTAL SHEETS
8	SBd	10	33.3/R36.9	XXX	XXX

REGISTERED CIVIL ENGINEER DATE

PLANS APPROVAL DATE

REGISTERED PROFESSIONAL ENGINEER No. Exp. CIVIL STATE OF CALIFORNIA

THE STATE OF CALIFORNIA OR ITS OFFICERS OR AGENTS SHALL NOT BE RESPONSIBLE FOR THE ACCURACY OR COMPLETENESS OF ELECTRONIC COPIES OF THIS PLAN SHEET.

SANBAG
1170 WEST 3RD STREET
2ND FLOOR
SAN BERNARDINO, CA 92410

AECOM
999 W. TOWN & COUNTRY RD
ORANGE, CA 92868

NOTES THIS SHEET:

SEE SC-1 FOR LEGEND.

(1) CONSTRUCT NEW PAVEMENT.

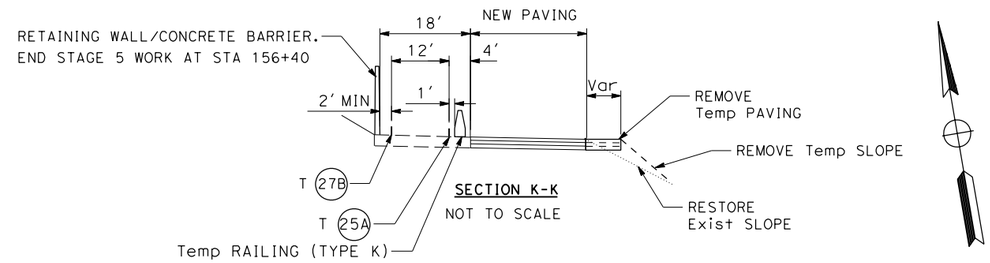

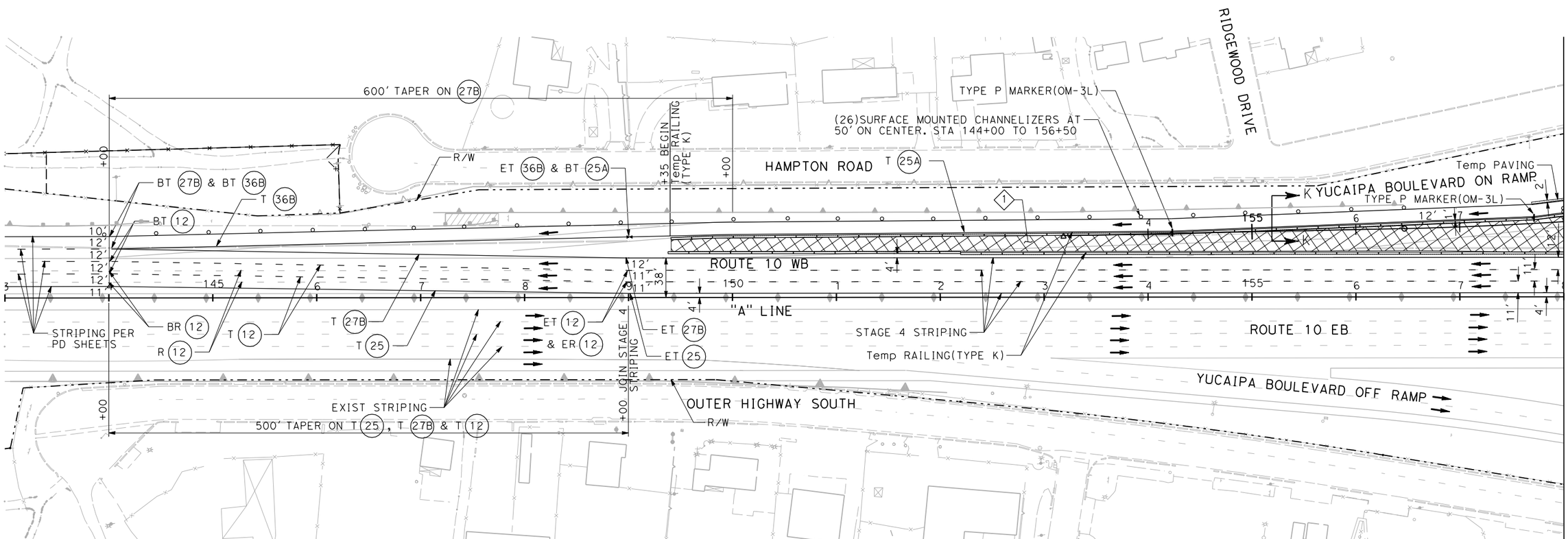

STAGE CONSTRUCTION AND TRAFFIC HANDLING PLAN STAGE 5

SCALE 1"=50'

THIS PLAN IS ACCURATE FOR TRAFFIC HANDLING ONLY

SC-30

STATE OF CALIFORNIA - DEPARTMENT OF TRANSPORTATION

Caltrans

CONSULTANT FUNCTIONAL SUPERVISOR: ED KOUZI

CALCULATED-DESIGNED BY

CHECKED BY

REVISED BY

DATE REVISED

LAST REVISION 00-00-00

DATE PLOTTED => 7/14/2009
TIME PLOTTED => 9:50:03 AM

RELATIVE BORDER SCALE IS IN INCHES 0 1 2 3

USERNAME => SmithJH
DGN FILE => ...\0f150ma030.dgn

CU 08220

EA 0F1500

Dist	COUNTY	ROUTE	POST MILES TOTAL PROJECT	SHEET No.	TOTAL SHEETS
8	SBd	10	33.3/R36.9	XXX	XXX

REGISTERED CIVIL ENGINEER DATE

PLANS APPROVAL DATE

REGISTERED PROFESSIONAL ENGINEER No. Exp. CIVIL STATE OF CALIFORNIA

THE STATE OF CALIFORNIA OR ITS OFFICERS OR AGENTS SHALL NOT BE RESPONSIBLE FOR THE ACCURACY OR COMPLETENESS OF ELECTRONIC COPIES OF THIS PLAN SHEET.

SANBAG
1170 WEST 3RD STREET
2ND FLOOR
SAN BERNARDINO, CA 92410

AECOM
999 W. TOWN & COUNTRY RD
ORANGE, CA 92868

NOTES THIS SHEET:

SEE SC-1 FOR LEGEND.

(1) CONSTRUCT NEW PAVEMENT AND IRRIGATION CROSSOVER.

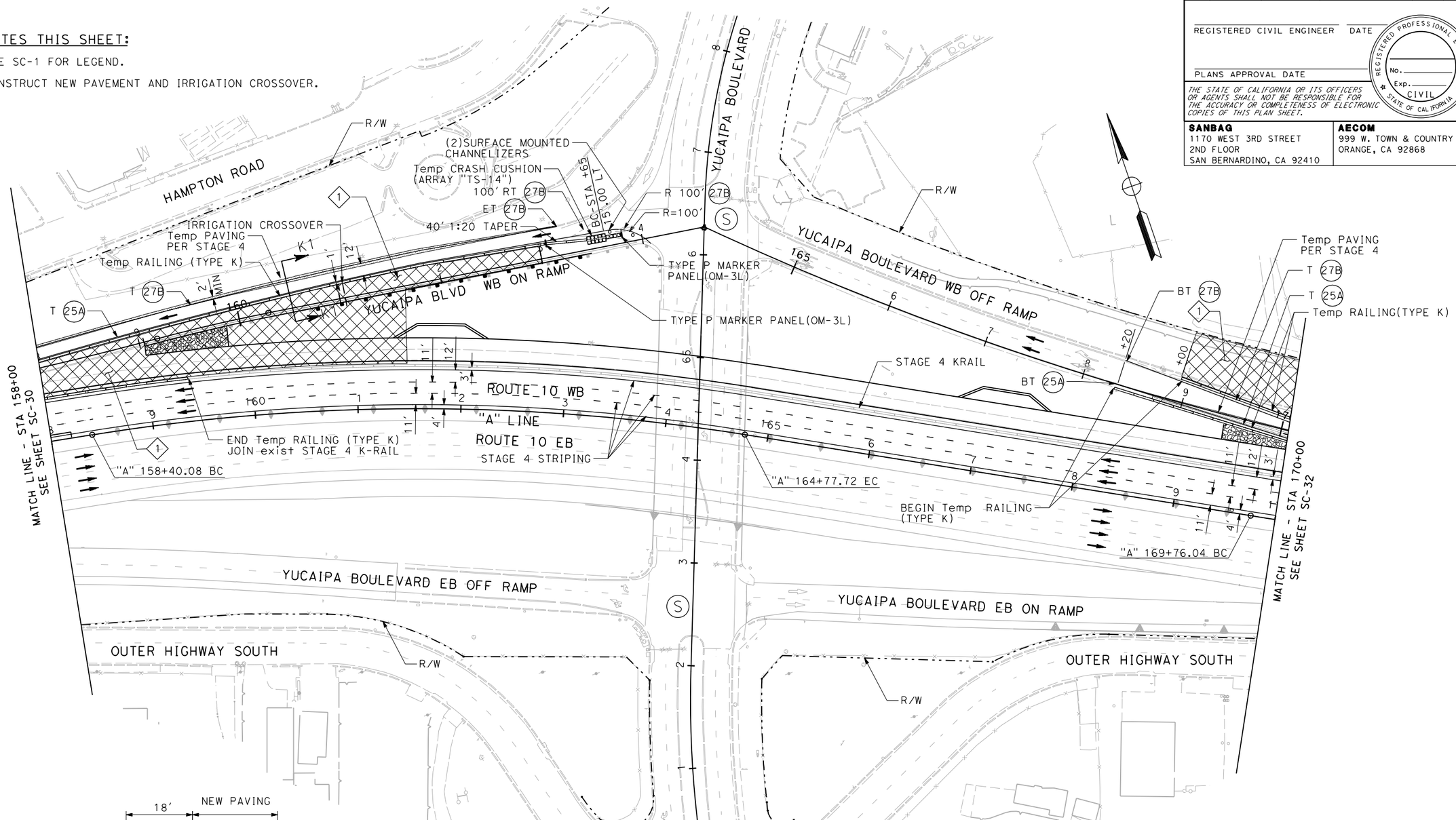

THIS PLAN IS ACCURATE FOR TRAFFIC HANDLING ONLY

STAGE CONSTRUCTION AND TRAFFIC HANDLING PLAN STAGE 5

SCALE 1"=50'

SC-31

STATE OF CALIFORNIA - DEPARTMENT OF TRANSPORTATION

Caltrans

CONSULTANT FUNCTIONAL SUPERVISOR: ED KOUZI

CALCULATED-DESIGNED BY

CHECKED BY

REVISED BY

DATE REVISED

LAST REVISION 00-00-00

DATE PLOTTED => 7/14/2009
TIME PLOTTED => 9:50:05 AM

RELATIVE BORDER SCALE IS IN INCHES 0 1 2 3

USERNAME => SmithJH
DGN FILE => ...\0f150ma031.dgn

CU 08220

EA 0F1500

Dist	COUNTY	ROUTE	POST MILES TOTAL PROJECT	SHEET No.	TOTAL SHEETS
8	SBd	10	33.3/R36.9	XXX	XXX

REGISTERED CIVIL ENGINEER DATE

PLANS APPROVAL DATE

REGISTERED PROFESSIONAL ENGINEER No. Exp. CIVIL STATE OF CALIFORNIA

THE STATE OF CALIFORNIA OR ITS OFFICERS OR AGENTS SHALL NOT BE RESPONSIBLE FOR THE ACCURACY OR COMPLETENESS OF ELECTRONIC COPIES OF THIS PLAN SHEET.

SANBAG
1170 WEST 3RD STREET
2ND FLOOR
SAN BERNARDINO, CA 92410

AECOM
999 W. TOWN & COUNTRY RD
ORANGE, CA 92868

NOTES THIS SHEET:

SEE SC-1 FOR LEGEND.

1. CONSTRUCT NEW PAVEMENT.
2. MAINTAIN EXISTING OVERHEAD SIGN STRUCTURE AND SIGN PANEL DURING STAGES 4 AND 5.

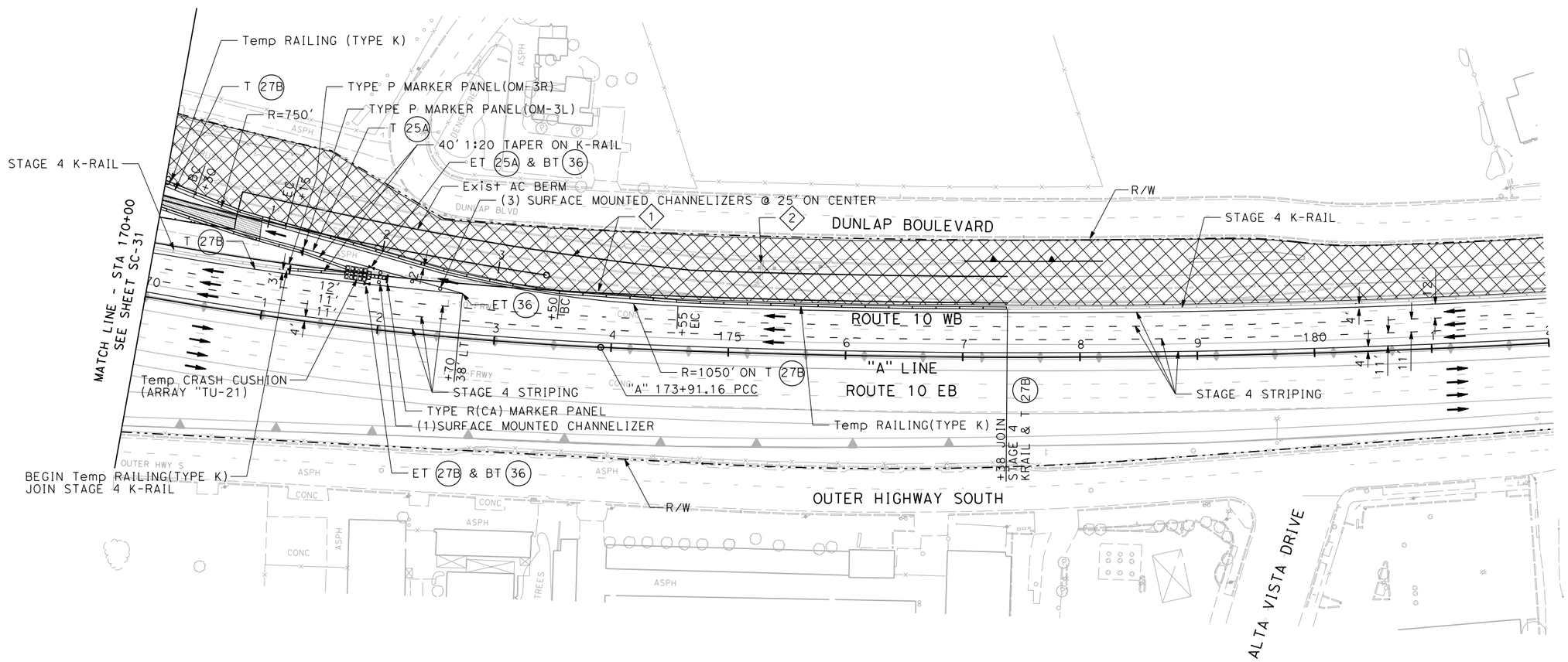

THIS PLAN IS ACCURATE FOR STAGE HANDLING ONLY

STAGE CONSTRUCTION AND TRAFFIC HANDLING PLAN STAGE 5

SCALE 1"=50'

SC-32

STATE OF CALIFORNIA - DEPARTMENT OF TRANSPORTATION

Caltrans

CONSULTANT FUNCTIONAL SUPERVISOR: ED KOUZI

CALCULATED-DESIGNED BY

CHECKED BY

REVISED BY

DATE REVISED

LAST REVISION 00-00-00

DATE PLOTTED => 7/14/2009
TIME PLOTTED => 9:50:09 AM

RELATIVE BORDER SCALE IS IN INCHES 0 1 2 3

USERNAME => SmithJH
DGN FILE => ...\0f150ma032.dgn

CU 08220

EA 0F1500

Dist	COUNTY	ROUTE	POST MILES TOTAL PROJECT	SHEET No.	TOTAL SHEETS
8	SBd	10	33.3/R36.9	XXX	XXX

REGISTERED CIVIL ENGINEER DATE

PLANS APPROVAL DATE

REGISTERED PROFESSIONAL ENGINEER No. Exp. CIVIL STATE OF CALIFORNIA

THE STATE OF CALIFORNIA OR ITS OFFICERS OR AGENTS SHALL NOT BE RESPONSIBLE FOR THE ACCURACY OR COMPLETENESS OF ELECTRONIC COPIES OF THIS PLAN SHEET.

SANBAG
1170 WEST 3RD STREET
2ND FLOOR
SAN BERNARDINO, CA 92410

AECOM
999 W. TOWN & COUNTRY RD
ORANGE, CA 92868

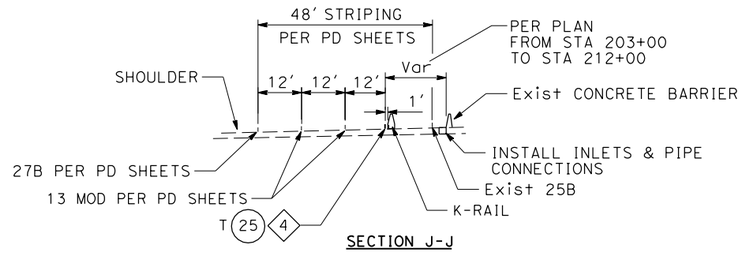

SECTION J-J

NOT TO SCALE
STA 157+00 TO STA 235+50

NOTES THIS SHEET:

SEE SC-1 FOR LEGEND.

1. CONSTRUCT STORM DRAIN MODIFICATIONS PER D SHEETS.
2. INSTALL T 25 ALONG ALIGNMENT OF 13 MOD.
3. CONSTRUCT CONCRETE BARRIER. SEE SECTION J1-J1 ON SC-34.

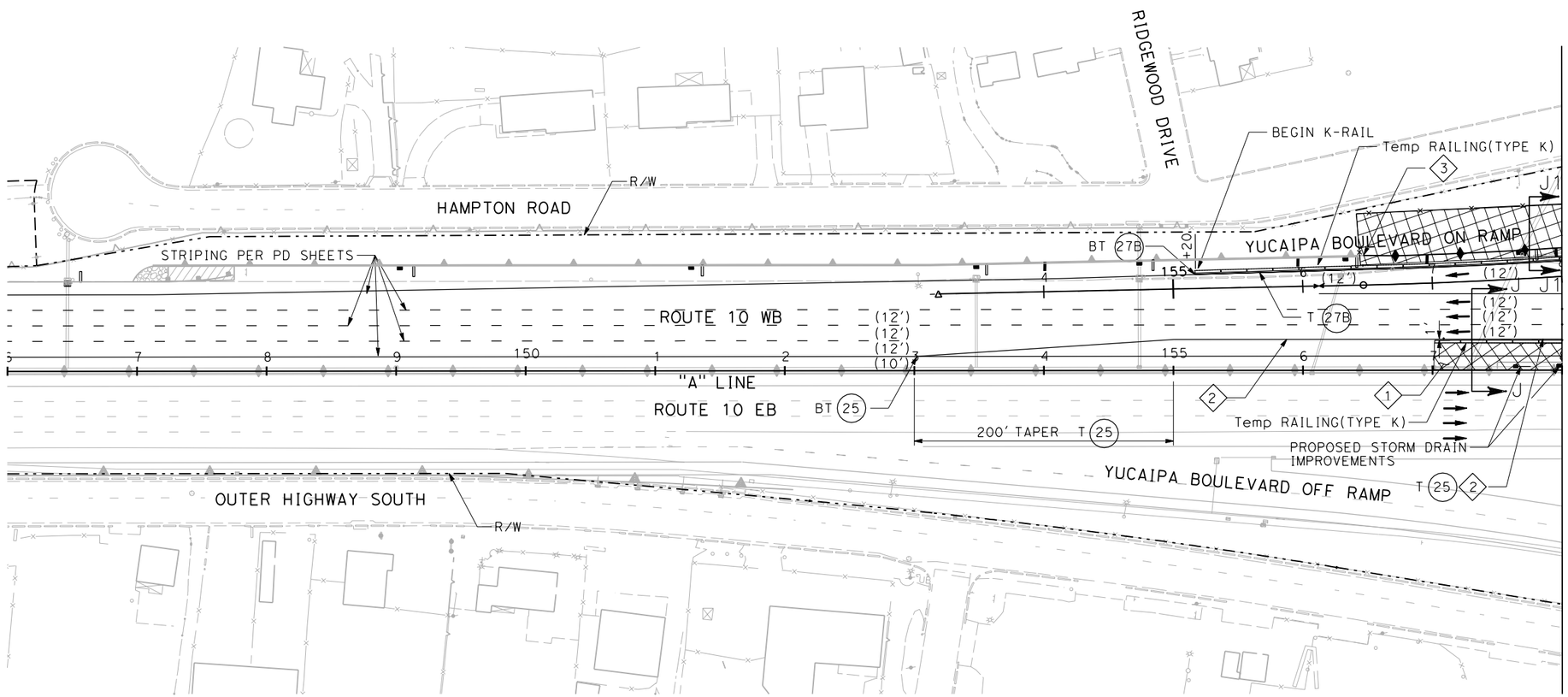

THIS PLAN IS ACCURATE FOR TRAFFIC HANDLING ONLY

STAGE CONSTRUCTION AND TRAFFIC HANDLING PLAN STAGE 6

SCALE 1"=50'

SC-33

REVISED BY	DATE REVISED

CALCULATED-DESIGNED BY
CHECKED BY

CONSULTANT FUNCTIONAL SUPERVISOR
ED KOUZI

STATE OF CALIFORNIA - DEPARTMENT OF TRANSPORTATION
Caltrans

LAST REVISION 00-00-00
DATE PLOTTED => 7/14/2009
TIME PLOTTED => 9:50:11 AM

RELATIVE BORDER SCALE IS IN INCHES 0 1 2 3

USERNAME => SmithJH
DGN FILE => ...\0f150ma033.dgn

CU 08220

EA 0F1500

Dist	COUNTY	ROUTE	POST MILES TOTAL PROJECT	SHEET No.	TOTAL SHEETS
8	SBd	10	33.3/R36.9	XXX	XXX

REGISTERED CIVIL ENGINEER DATE

PLANS APPROVAL DATE

REGISTERED PROFESSIONAL ENGINEER No. Exp. CIVIL STATE OF CALIFORNIA

THE STATE OF CALIFORNIA OR ITS OFFICERS OR AGENTS SHALL NOT BE RESPONSIBLE FOR THE ACCURACY OR COMPLETENESS OF ELECTRONIC COPIES OF THIS PLAN SHEET.

SANBAG
1170 WEST 3RD STREET
2ND FLOOR
SAN BERNARDINO, CA 92410

AECOM
999 W. TOWN & COUNTRY RD
ORANGE, CA 92868

NOTES THIS SHEET:

SEE SC-1 FOR LEGEND AND SC-33 FOR SECTION J-J.

1. CONSTRUCT STORM DRAIN MODIFICATIONS PER D SHEETS.
2. INSTALL T (25) ALONG ALIGNMENT OF (13) MOD.
3. CONSTRUCT CONCRETE BARRIER. SEE SECTION J1-J1.

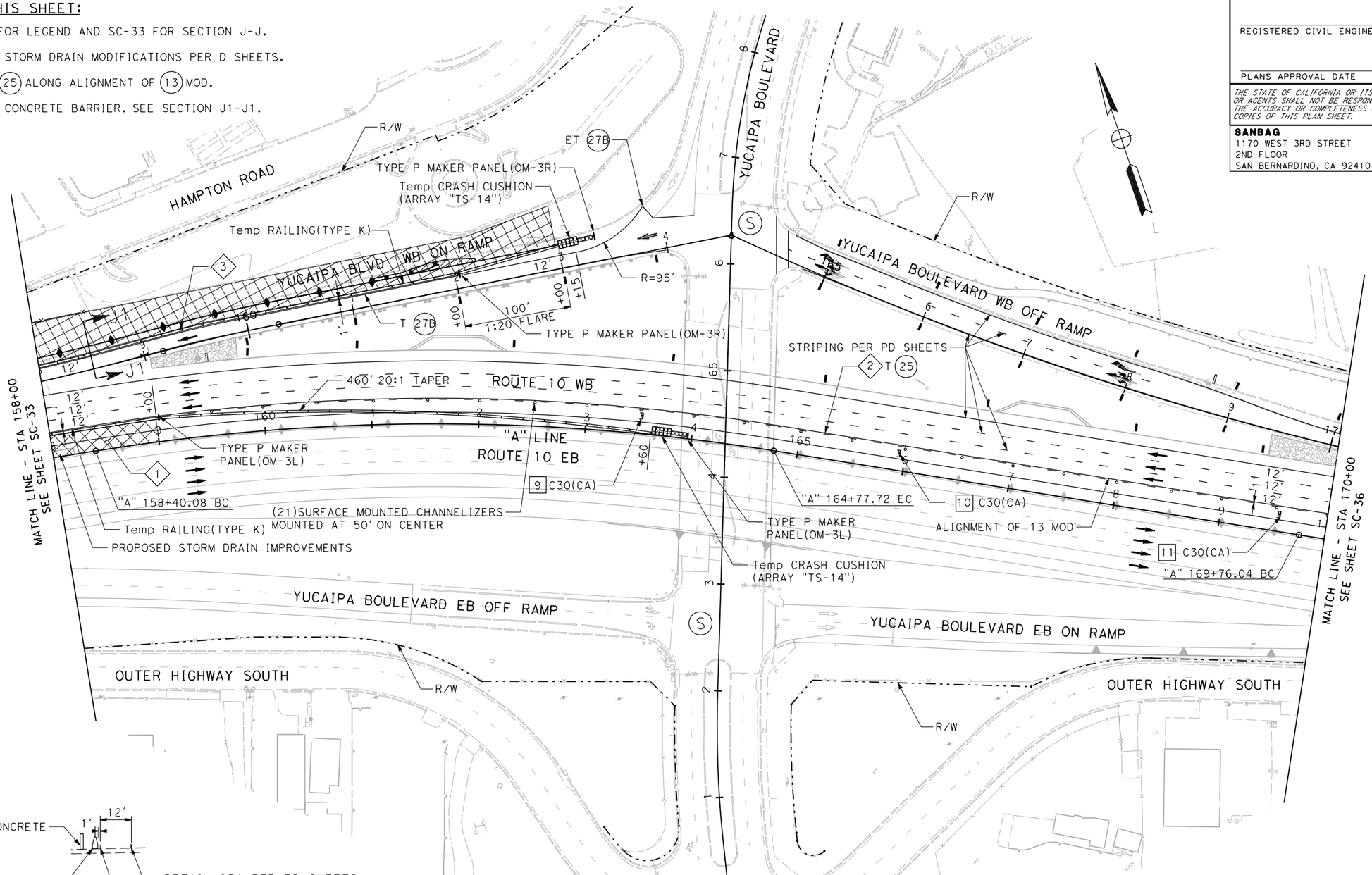

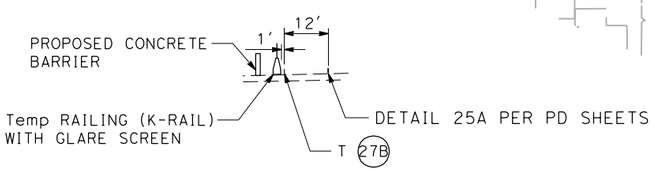

SECTION J1-J1

NOT TO SCALE
STA 155+15 TO STA 162+00

THIS PLAN IS ACCURATE FOR TRAFFIC HANDLING ONLY

STAGE CONSTRUCTION AND TRAFFIC HANDLING PLAN STAGE 6

SCALE 1"=50'

SC-34

REVISED BY	DATE REVISED

CALCULATED-DESIGNED BY
CHECKED BY
SUPERVISOR
CONSULTANT FUNCTIONAL SUPERVISOR
ED KOUZI

STATE OF CALIFORNIA - DEPARTMENT OF TRANSPORTATION
Caltrans

LAST REVISION 00-00-00
DATE PLOTTED => 7/14/2009
TIME PLOTTED => 9:50:13 AM

RELATIVE BORDER SCALE IS IN INCHES 0 1 2 3

USERNAME => SmithJH
DGN FILE => ...\0f150ma034.dgn

CU 08220

EA 0F1500

Dist	COUNTY	ROUTE	POST MILES TOTAL PROJECT	SHEET No.	TOTAL SHEETS
8	SBd	10	33.3/R36.9	XXX	XXX

REGISTERED CIVIL ENGINEER DATE

PLANS APPROVAL DATE

REGISTERED PROFESSIONAL ENGINEER No. Exp. CIVIL STATE OF CALIFORNIA

THE STATE OF CALIFORNIA OR ITS OFFICERS OR AGENTS SHALL NOT BE RESPONSIBLE FOR THE ACCURACY OR COMPLETENESS OF ELECTRONIC COPIES OF THIS PLAN SHEET.

SANBAG
1170 WEST 3RD STREET
2ND FLOOR
SAN BERNARDINO, CA 92410

AECOM
999 W. TOWN & COUNTRY RD
ORANGE, CA 92868

NOTES THIS SHEET:

SEE SC-1 FOR LEGEND.

2 INSTALL T 25 ALONG ALIGNMENT OF 13 MOD.

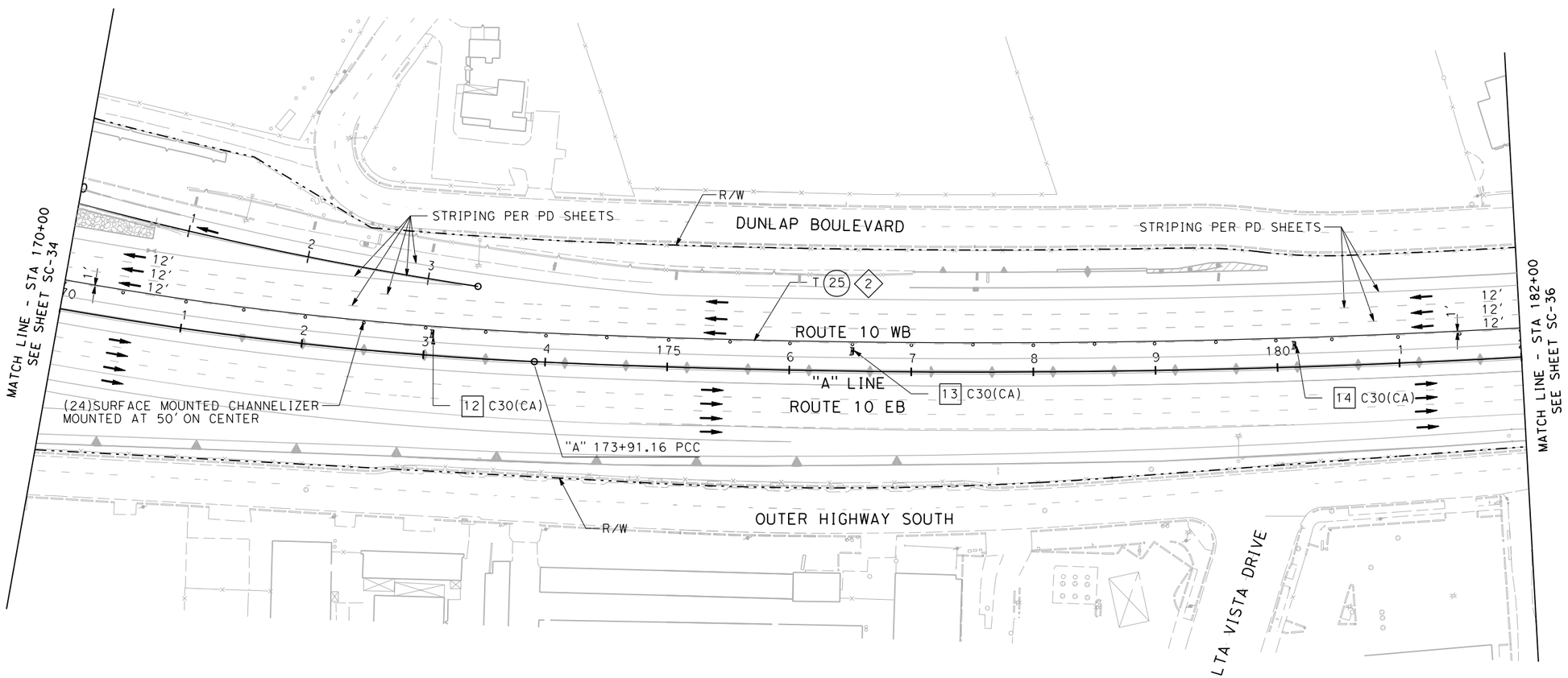

THIS PLAN IS ACCURATE FOR STAGE HANDLING ONLY

STAGE CONSTRUCTION AND TRAFFIC HANDLING PLAN STAGE 6

SCALE 1"=50'

SC-35

REVISED BY	DATE REVISED

CALCULATED-DESIGNED BY
CHECKED BY

CONSULTANT FUNCTIONAL SUPERVISOR
ED KOUZI

STATE OF CALIFORNIA - DEPARTMENT OF TRANSPORTATION
Caltrans

LAST REVISION 00-00-00
DATE PLOTTED => 7/14/2009
TIME PLOTTED => 9:50:15 AM

RELATIVE BORDER SCALE IS IN INCHES 0 1 2 3

USERNAME => SmithJH
DGN FILE => ...\0f150ma035.dgn

CU 08220

EA 0F1500

Dist	COUNTY	ROUTE	POST MILES TOTAL PROJECT	SHEET No.	TOTAL SHEETS
8	SBd	10	33.3/R36.9	XXX	XXX

REGISTERED CIVIL ENGINEER DATE

PLANS APPROVAL DATE

REGISTERED PROFESSIONAL ENGINEER No. Exp. CIVIL STATE OF CALIFORNIA

THE STATE OF CALIFORNIA OR ITS OFFICERS OR AGENTS SHALL NOT BE RESPONSIBLE FOR THE ACCURACY OR COMPLETENESS OF ELECTRONIC COPIES OF THIS PLAN SHEET.

SANBAG
1170 WEST 3RD STREET
2ND FLOOR
SAN BERNARDINO, CA 92410

AECOM
999 W. TOWN & COUNTRY RD
ORANGE, CA 92868

NOTES THIS SHEET:

SEE SC-1 FOR LEGEND.

2 INSTALL T 25 ALONG ALIGNMENT OF 13 MOD.

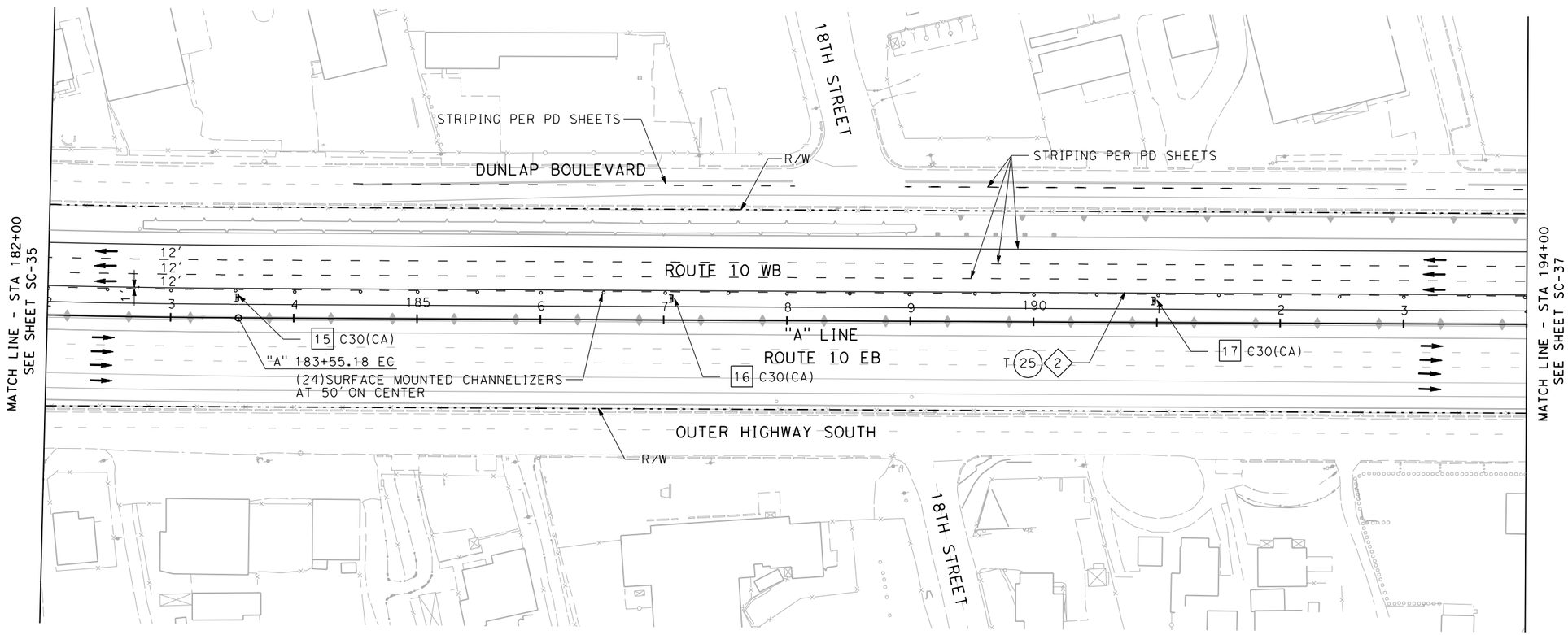

THIS PLAN IS ACCURATE FOR TRAFFIC HANDLING ONLY

STAGE CONSTRUCTION AND TRAFFIC HANDLING PLAN STAGE 6

SCALE 1"=50'

SC-36

REVISED BY	DATE REVISED

CALCULATED-DESIGNED BY

CHECKED BY

CONSULTANT FUNCTIONAL SUPERVISOR

ED KOUZI

STATE OF CALIFORNIA - DEPARTMENT OF TRANSPORTATION

Caltrans

LAST REVISION 00-00-00

DATE PLOTTED => 7/14/2009
TIME PLOTTED => 9:50:17 AM

RELATIVE BORDER SCALE IS IN INCHES 0 1 2 3

USERNAME => SmithJH
DGN FILE => ...\0f150ma036.dgn

CU 08220

EA 0F1500

Dist	COUNTY	ROUTE	POST MILES TOTAL PROJECT	SHEET No.	TOTAL SHEETS
8	SBd	10	33.3/R36.9	XXX	XXX

REGISTERED CIVIL ENGINEER DATE

PLANS APPROVAL DATE

REGISTERED PROFESSIONAL ENGINEER No. Exp. CIVIL STATE OF CALIFORNIA

THE STATE OF CALIFORNIA OR ITS OFFICERS OR AGENTS SHALL NOT BE RESPONSIBLE FOR THE ACCURACY OR COMPLETENESS OF ELECTRONIC COPIES OF THIS PLAN SHEET.

SANBAG
1170 WEST 3RD STREET
2ND FLOOR
SAN BERNARDINO, CA 92410

AECOM
999 W. TOWN & COUNTRY RD
ORANGE, CA 92868

NOTES THIS SHEET:

SEE SC-1 FOR LEGEND.

1. CONSTRUCT STORM DRAIN MODIFICATIONS PER D SHEETS.
2. INSTALL T(25) ALONG ALIGNMENT OF (13) MOD.

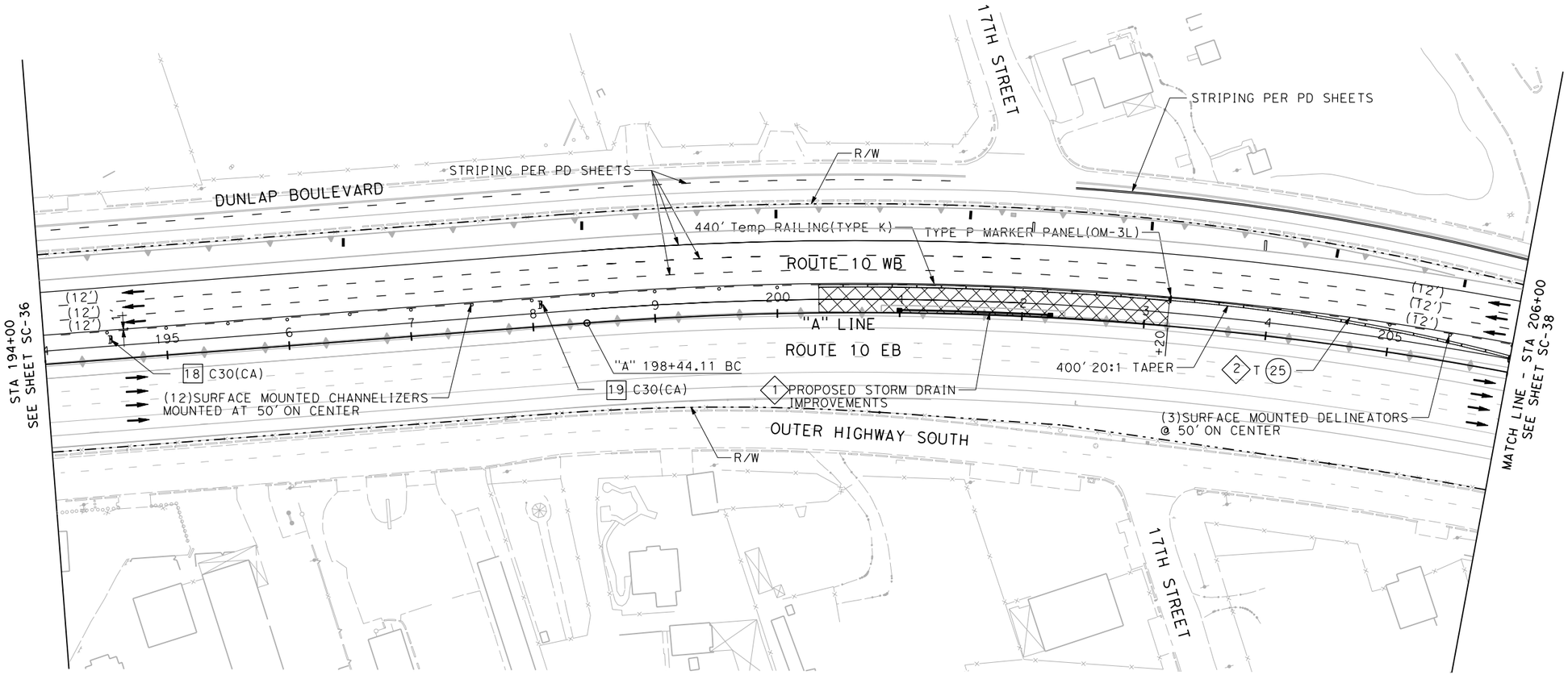

THIS PLAN IS ACCURATE FOR TRAFFIC HANDLING ONLY

STAGE CONSTRUCTION AND TRAFFIC HANDLING PLAN STAGE 6

SCALE 1"=50'

SC-37

REVISED BY	DATE REVISED

CALCULATED-DESIGNED BY
CHECKED BY

CONSULTANT FUNCTIONAL SUPERVISOR
ED KOUZI

STATE OF CALIFORNIA - DEPARTMENT OF TRANSPORTATION
Caltrans

LAST REVISION 00-00-00
DATE PLOTTED => 7/14/2009
TIME PLOTTED => 9:50:18 AM

RELATIVE BORDER SCALE IS IN INCHES 0 1 2 3

USERNAME => SmithJH
DGN FILE => ...\0f150ma037.dgn

CU 08220

EA 0F1500

Dist	COUNTY	ROUTE	POST MILES TOTAL PROJECT	SHEET No.	TOTAL SHEETS
8	SBd	10	33.3/R36.9	XXX	XXX

REGISTERED CIVIL ENGINEER DATE

PLANS APPROVAL DATE

REGISTERED PROFESSIONAL ENGINEER No. Exp. CIVIL STATE OF CALIFORNIA

THE STATE OF CALIFORNIA OR ITS OFFICERS OR AGENTS SHALL NOT BE RESPONSIBLE FOR THE ACCURACY OR COMPLETENESS OF ELECTRONIC COPIES OF THIS PLAN SHEET.

SANBAG
1170 WEST 3RD STREET
2ND FLOOR
SAN BERNARDINO, CA 92410

AECOM
999 W. TOWN & COUNTRY RD
ORANGE, CA 92868

NOTES THIS SHEET:

SEE SC-1 FOR LEGEND.

1. SHOULDER CONSTRUCTION PER L SHEETS.
2. INSTALL T (25) ALONG ALIGNMENT OF (13) MOD.

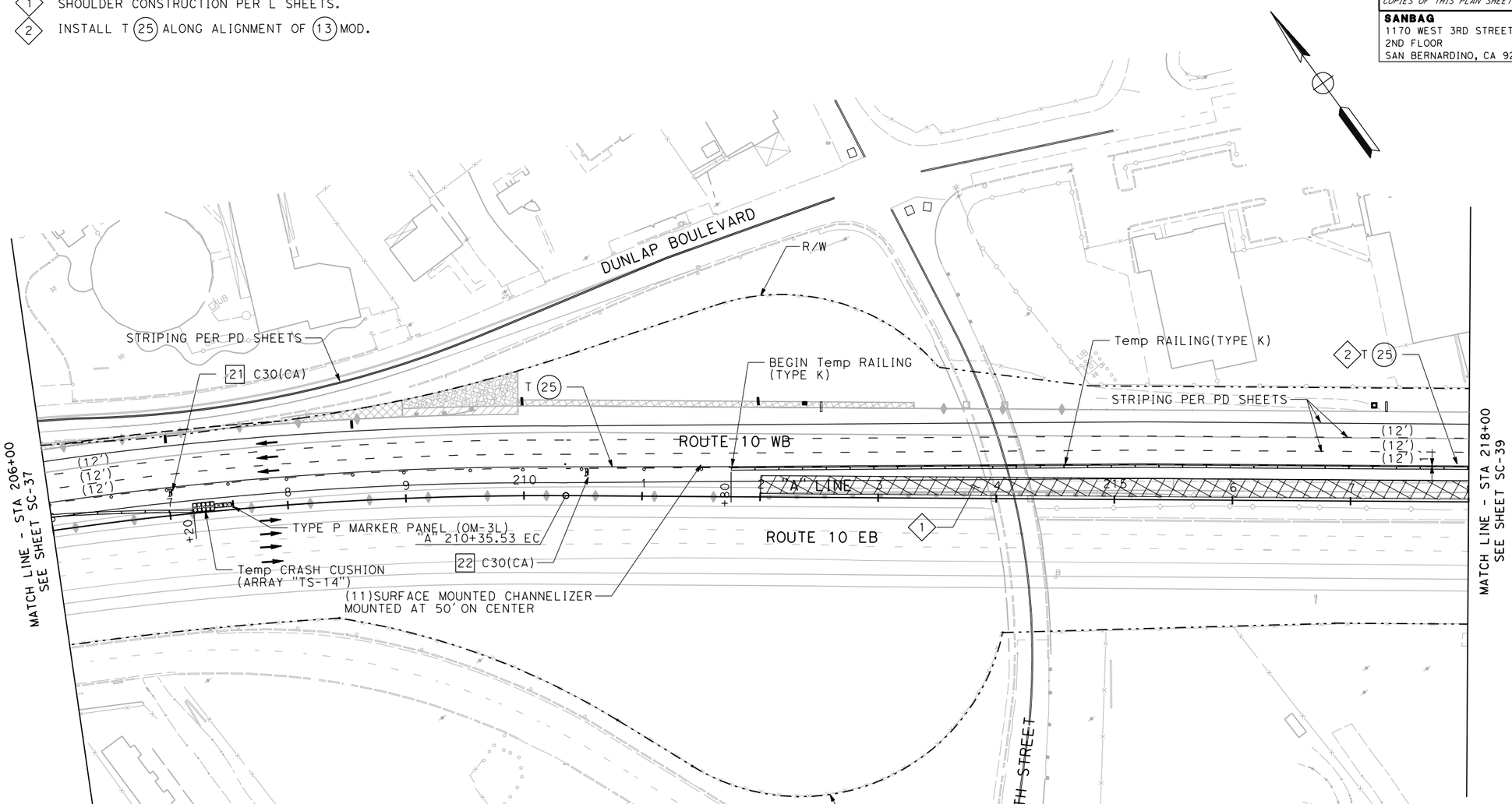

THIS PLAN IS ACCURATE FOR TRAFFIC HANDLING ONLY

STAGE CONSTRUCTION AND TRAFFIC HANDLING PLAN STAGE 6

SCALE 1"=50'

SC-38

STATE OF CALIFORNIA - DEPARTMENT OF TRANSPORTATION

Caltrans

CONSULTANT FUNCTIONAL SUPERVISOR: ED KOUZI

CALCULATED-DESIGNED BY

CHECKED BY

REVISED BY

DATE REVISED

LAST REVISION 00-00-00

DATE PLOTTED => 7/14/2009
TIME PLOTTED => 9:50:20 AM

RELATIVE BORDER SCALE IS IN INCHES 0 1 2 3

USERNAME => SmithJH
DGN FILE => ...\0f150ma038.dgn

CU 08220

EA 0F1500

Dist	COUNTY	ROUTE	POST MILES TOTAL PROJECT	SHEET No.	TOTAL SHEETS
8	SBd	10	33.3/R36.9	XXX	XXX

REGISTERED CIVIL ENGINEER DATE

PLANS APPROVAL DATE

REGISTERED PROFESSIONAL ENGINEER No. Exp. CIVIL STATE OF CALIFORNIA

THE STATE OF CALIFORNIA OR ITS OFFICERS OR AGENTS SHALL NOT BE RESPONSIBLE FOR THE ACCURACY OR COMPLETENESS OF ELECTRONIC COPIES OF THIS PLAN SHEET.

SANBAG
1170 WEST 3RD STREET
2ND FLOOR
SAN BERNARDINO, CA 92410

AECOM
999 W. TOWN & COUNTRY RD
ORANGE, CA 92868

NOTES THIS SHEET:

SEE SC-1 FOR LEGEND.

1. SHOULDER CONSTRUCTION PER L SHEETS.
2. INSTALL T(25) ALONG ALIGNMENT OF (13) MOD.

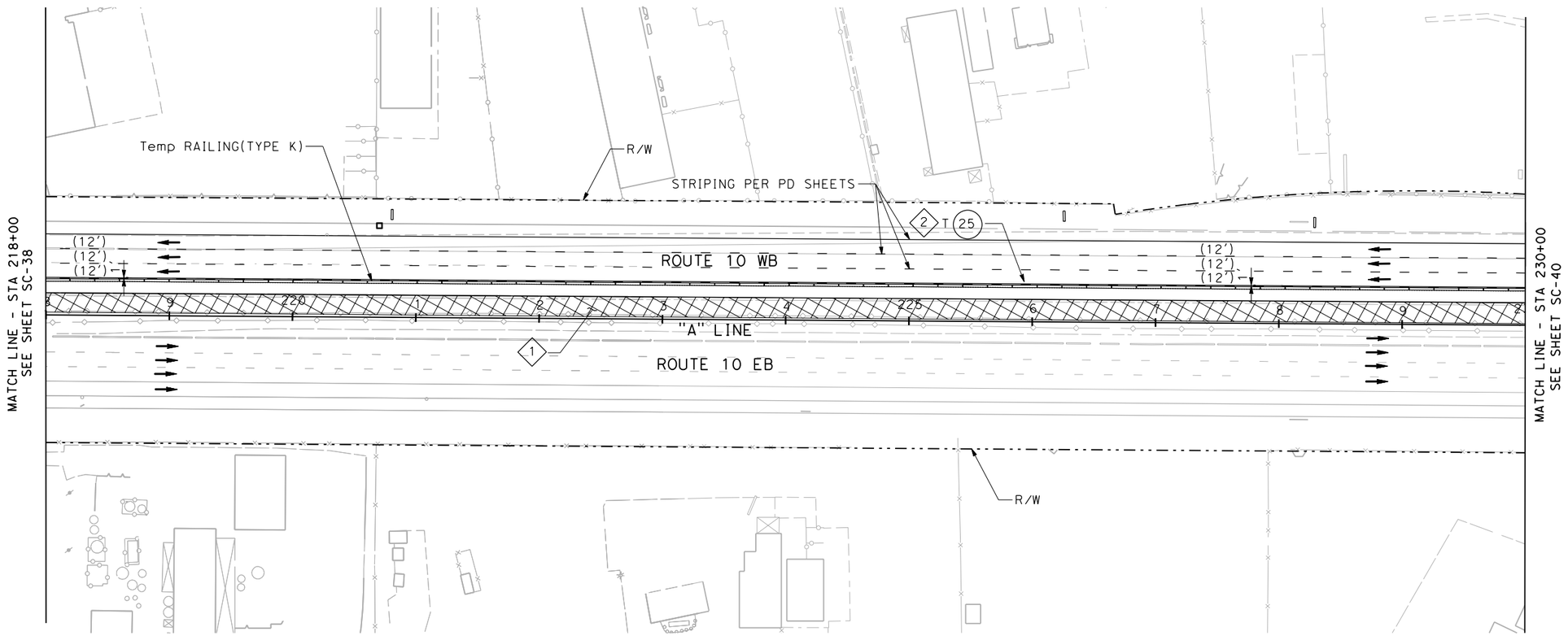

THIS PLAN IS ACCURATE FOR TRAFFIC HANDLING ONLY

STAGE CONSTRUCTION AND TRAFFIC HANDLING PLAN STAGE 6

SCALE 1"=50'

SC-39

STATE OF CALIFORNIA - DEPARTMENT OF TRANSPORTATION

Caltrans

CONSULTANT FUNCTIONAL SUPERVISOR: ED KOUZI

CALCULATED-DESIGNED BY

CHECKED BY

REVISED BY

DATE REVISED

LAST REVISION 00-00-00

DATE PLOTTED => 7/14/2009
TIME PLOTTED => 9:50:21 AM

RELATIVE BORDER SCALE IS IN INCHES 0 1 2 3

USERNAME => SmithJH
DGN FILE => ...\0f150ma039.dgn

CU 08220

EA 0F1500

Dist	COUNTY	ROUTE	POST MILES TOTAL PROJECT	SHEET No.	TOTAL SHEETS
8	SBd	10	33.3/R36.9	XXX	XXX

REGISTERED CIVIL ENGINEER DATE

PLANS APPROVAL DATE

REGISTERED PROFESSIONAL ENGINEER No. Exp. CIVIL STATE OF CALIFORNIA

THE STATE OF CALIFORNIA OR ITS OFFICERS OR AGENTS SHALL NOT BE RESPONSIBLE FOR THE ACCURACY OR COMPLETENESS OF ELECTRONIC COPIES OF THIS PLAN SHEET.

SANBAG
1170 WEST 3RD STREET
2ND FLOOR
SAN BERNARDINO, CA 92410

AECOM
999 W. TOWN & COUNTRY RD
ORANGE, CA 92868

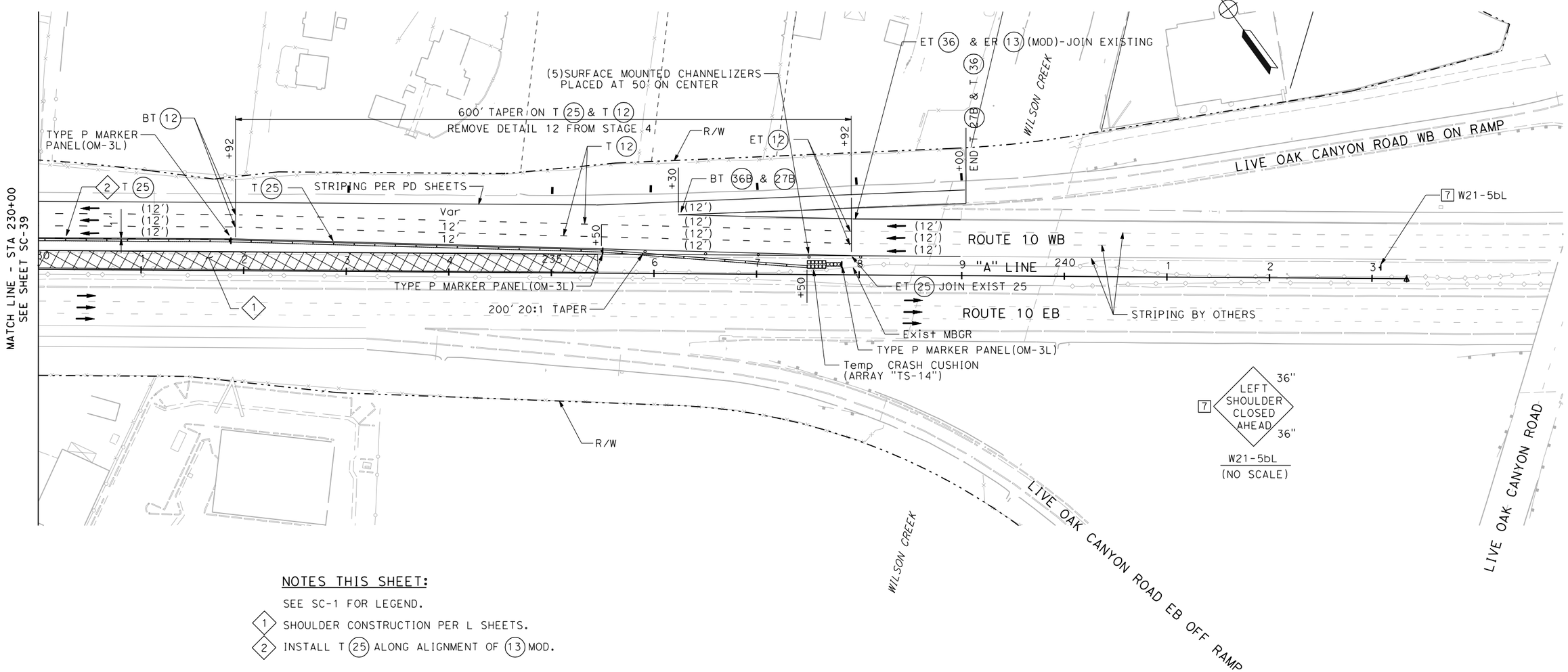

NOTES THIS SHEET:

SEE SC-1 FOR LEGEND.

1. SHOULDER CONSTRUCTION PER L SHEETS.
2. INSTALL T 25 ALONG ALIGNMENT OF 13 MOD.

THIS PLAN IS ACCURATE FOR TRAFFIC HANDLING ONLY

STAGE CONSTRUCTION AND TRAFFIC HANDLING PLAN STAGE 6

SCALE 1"=50'

SC-40

REVISED BY	DATE REVISED

CALCULATED-DESIGNED BY

CHECKED BY

CONSULTANT FUNCTIONAL SUPERVISOR: ED KOUZI

STATE OF CALIFORNIA - DEPARTMENT OF TRANSPORTATION

Caltrans

LAST REVISION 00-00-00

DATE PLOTTED => 7/14/2009
TIME PLOTTED => 9:50:23 AM

RELATIVE BORDER SCALE IS IN INCHES 0 1 2 3

USERNAME => SmithJH
DGN FILE => ...\0f150ma040.dgn

CU 08220

EA 0F1500

Dist	COUNTY	ROUTE	POST MILES TOTAL PROJECT	SHEET No.	TOTAL SHEETS
8	SBd	10	33.3/R36.9	XXX	XXX

REGISTERED CIVIL ENGINEER DATE

PLANS APPROVAL DATE

REGISTERED PROFESSIONAL ENGINEER No. Exp. CIVIL STATE OF CALIFORNIA

THE STATE OF CALIFORNIA OR ITS OFFICERS OR AGENTS SHALL NOT BE RESPONSIBLE FOR THE ACCURACY OR COMPLETENESS OF ELECTRONIC COPIES OF THIS PLAN SHEET.

SANBAG
1170 WEST 3RD STREET
2ND FLOOR
SAN BERNARDINO, CA 92410

AECOM
999 W. TOWN & COUNTRY RD
ORANGE, CA 92868

TRAFFIC HANDLING QUANTITIES

SHEET NO	STATION LOCATION	STA LINE	TEMP TRAFFIC STRIPE (PAINT)								TEMP PAVEMENT MARKING (PAINT)		TEMP RAILING (TYPE K)	TRAFFIC SCREEN	BARRICADE TYPE III	TEMP CRASH CUSHION MODULE			MARKER PANEL (N)	PAVEMENT MARKER (NON-REFLECTIVE)	TEMP PAVEMENT MARKER (REFLECTIVE)				SURFACE MOUNTED DELINEATORS	THERMOPLASTIC		REMOVE PAINTED PAVEMENT STRIPING & MARKING	REMOVE PAVEMENT MARKER	SEE NOTE
			4" BROKEN WHITE		4" SOLID YELLOW			4" SOLID WHITE	8" SOLID WHITE																	REMOVE TRAFFIC STRIPE (WHITE)	REMOVE TRAFFIC STRIPE (YELLOW)			
			DETAIL 8	DETAIL 12	DETAIL 21	DETAIL 25	DETAIL 25A	DETAIL 27B	DETAIL 36	DETAIL 36A/B	12" WHITE LIMIT LINE	ARROWS AND SYMBOLS				ARRAY TYPE 'TU21'	ARRAY TYPE 'TS14'	ABSORB 350(7)	TYPE "P" OR "R"	TYPE A	TYPE C	TYPE D	TYPE G	TYPE H							
			ft	ft	ft	ft	ft	ft	ft	ft	ft	sf	ft	ft	EA	EA	EA	EA	EA	EA	EA	EA	EA	EA	EA	ft	ft	sf	EA	
	STAGE 1		-	-	-	-	-	-	-	-	-	-	-	-	-	-	-	-	-	-	-	-	-	-	-	-	-	-	-	-	-
SC-2&6	53+00 TO 139+50		-	-	-	-	-	-	-	-	-	-	420	420	-	-	28	-	4	-	-	-	-	-	-	-	-	-	-	-	-
	STAGE 2																														
SC-9	50+00 TO 62+00	A	-	2,400	-	900	-	1,020	-	300	-	-	980	980	-	-	14	-	2	-	-	-	70	23	-	3,600	300	-	57	1
SC-10	62+00 TO 74+00	A	-	2,400	-	1,200	-	800	-	-	-	-	1,200	1,200	-	-	-	-	-	-	-	-	50	25	-	3,200	-	-	50	1
SC-11	74+00 TO 86+00	A	-	2,400	-	1,200	-	1,200	-	-	-	-	1,200	1,200	-	-	-	-	-	-	-	-	50	25	-	3,600	-	-	50	1
SC-12	86+00 TO 98+00	A	-	2,400	-	1,200	-	1,200	-	-	-	-	1,600	1,600	-	-	14	-	2	-	-	-	50	25	-	3,600	-	-	50	1
SC-13	98+00 TO 110+00	A	-	2,400	-	1,200	-	1,034	-	-	-	-	1,200	1,200	-	-	-	-	-	-	-	-	50	25	-	3,434	-	-	50	1
SC-14	110+00 TO 122+00	A	-	2,400	-	1,200	-	1,124	-	-	-	-	1,200	1,200	-	-	-	-	-	-	-	-	50	25	-	3,524	-	-	50	1
SC-15	122+00 TO 134+00	A	-	2,400	-	1,200	-	1,200	-	-	-	-	1,200	1,200	-	-	-	-	-	-	-	-	50	25	-	3,600	-	-	50	1
SC-16	134+00 TO 139+50	A	-	1,100	-	550	-	550	-	-	-	-	540	540	-	-	14	-	2	-	-	-	26	13	9	1,000	-	-	39	1
	STAGE 4																									26,208	8,770	-	569	2
SC-20	125+50 TO 134+00	A	-	1,700	-	850	-	850	-	-	-	-	300	300	-	-	-	-	-	-	-	-	38	18	-	1,480	850	-	56	4
SC-21	134+00 TO 146+00	A	-	2,400	-	1,200	-	1,200	-	-	-	-	1,200	1,200	-	-	-	-	-	-	-	-	50	25	-	3,600	1,200	-	75	4
SC-22	146+00 TO 158+00	A	-	2,400	-	1,200	-	650	-	-	-	-	390	390	-	-	14	-	2	-	-	-	50	25	-	3,600	1,200	-	75	4
SC-22	YUCAIPA ON RAMP	Y-1	162	-	-	-	260	810	-	220	-	-	810	810	-	-	-	-	-	-	-	-	6	3	-	300	100	-	16	3
SC-23	158+00 TO 170+00	A	-	2,400	-	1,260	-	1,200	-	-	-	-	1,050	1,050	-	-	-	-	-	-	-	-	50	25	-	3,600	1,200	-	75	4
SC-23	YUCAIPA ON RAMP	Y-1	-	-	-	-	600	600	-	-	-	-	580	580	-	-	14	-	2	-	-	-	-	25	-	600	600	-	25	3
SC-23	YUCAIPA OFF RAMP	Y-2	-	-	-	-	150	150	-	-	-	-	150	150	-	-	-	-	-	-	-	-	-	7	-	150	-	-	-	3
SC-24	170+00 TO 182+00	A	-	2,400	-	1,200	-	993	-	-	-	-	940	940	-	-	-	-	-	-	-	-	50	25	-	3,600	1,200	-	75	4
SC-24	YUCAIPA OFF RAMP	Y-2	-	-	-	-	413	620	554	-	-	-	400	400	2	21	-	-	3	-	-	-	17	15	10	640	-	-	-	3
SC-25	182+00 TO 194+00	A	-	2,400	-	1,200	-	1,200	-	-	-	-	1,200	1,200	-	-	-	1	1	-	-	-	50	25	-	3,600	1,200	-	75	4
SC-26	194+00 TO 206+00	A	-	2,400	-	1,200	-	1,200	-	-	-	-	1,200	1,200	-	-	-	-	-	-	-	-	50	25	-	3,600	1,200	-	75	4
SHEET SUBTOTALS		-	162	34,000	-	15,560	1,423	17,601	554	520	-	-	17,760	17,760	2	21	98	1	18	-	-	-	757	404	19	76,536	17,820	-	1512	X
SHEET TOTALS			69,820										17,760	17,760	2	21	98	1	18	-	1161				19	76,536	17,820	-	1512	X

NOTES:

1. REMOVE EXISTING STRIPING IN CONFLICT WITH TEMPORARY STAGE 2 STRIPING.
2. REMOVE TEMPORARY STAGE 2 STRIPING FROM STA 50+00 TO STA 139+50 AND REPLACE WITH STRIPING PER PD SHEETS.
3. REMOVE EXISTING STRIPING IN CONFLICT WITH TEMPORARY STAGE 4 ON RAMP OR OFF RAMP STRIPING.
4. REMOVE EXISTING STRIPING IN CONFLICT WITH TEMPORARY STAGE 4 STRIPING.

THIS PLAN IS ACCURATE FOR TRAFFIC HANDLING ONLY

STAGE CONSTRUCTION AND TRAFFIC HANDLING QUANTITIES

SCQ-1

REVISED BY | DATE REVISED

CALCULATED-DESIGNED BY | CHECKED BY

CONSULTANT FUNCTIONAL SUPERVISOR: ED KOUZI

STATE OF CALIFORNIA - DEPARTMENT OF TRANSPORTATION

Caltrans

LAST REVISION 00-00-00 | DATE PLOTTED => 7/14/2009 | TIME PLOTTED => 9:51:02 AM

RELATIVE BORDER SCALE IS IN INCHES 0 1 2 3

USERNAME => SmithJH
DGN FILE => ...\0f150mf001.dgn

CU 08220

EA 0F1500

Dist	COUNTY	ROUTE	POST MILES TOTAL PROJECT	SHEET No.	TOTAL SHEETS
8	SBd	10	33.3/R36.9	XXX	XXX

REGISTERED CIVIL ENGINEER DATE

PLANS APPROVAL DATE

REGISTERED PROFESSIONAL ENGINEER No. Exp. CIVIL STATE OF CALIFORNIA

THE STATE OF CALIFORNIA OR ITS OFFICERS OR AGENTS SHALL NOT BE RESPONSIBLE FOR THE ACCURACY OR COMPLETENESS OF ELECTRONIC COPIES OF THIS PLAN SHEET.

SANBAG
1170 WEST 3RD STREET
2ND FLOOR
SAN BERNARDINO, CA 92410

AECOM
999 W. TOWN & COUNTRY RD
ORANGE, CA 92868

NOTES:

5. REMOVE EXISTING STRIPING IN CONFLICT WITH TEMPORARY STAGE 4 STRIPING.
6. REMOVE TEMPORARY STAGE 4 STRIPING FROM STA 125+50 TO STA 149+00 AND REPLACE WITH STRIPING PER PD SHEETS.
7. MAINTAIN STAGE 4 TRAFFIC STRIPING ALONG WB I-10.
8. REMOVE TEMPORARY STAGE 4 AND STAGE 5 FROM THE YUCAIPA RAMPS AND RELATED MAINLINE STRIPING.
9. REMOVE TEMPORARY STRIPING FROM STA 144+00 TO STA 153+00 AND REPLACE WITH STRIPING PER PD SHEETS.
10. REMOVE TEMPORARY STAGE 4 STRIPING IN CONFLICT WITH TEMPORARY STAGE 6 STRIPING.
11. K-RAIL ALONG DUNLAP BLVD TO BE EQUIPED WITH GLARE SCREEN.

TRAFFIC HANDLING QUANTITIES

SHEET NO	STATION LOCATION	STA LINE	TEMP TRAFFIC STRIPE (PAINT)								TEMP PAVEMENT MARKING (PAINT)		TEMP RAILING (TYPE K)	TRAFFIC SCREEN	BARRICADE TYPE III	TEMP CRASH CUSHION MODULE			MARKER PANEL (N)	PAVEMENT MARKER (NON-REFLECTIVE)	TEMP PAVEMENT MARKER (REFLECTIVE)				SURFACE MOUNTED DELINEATORS	THERMOPLASTIC		REMOVE PAINTED PAVEMENT STRIPING & MARKING	REMOVE PAVEMENT MARKER	SEE NOTE
			4" BROKEN WHITE		4" SOLID YELLOW			4" SOLID WHITE	8" SOLID WHITE																	REMOVE TRAFFIC STRIPE (WHITE)	REMOVE TRAFFIC STRIPE (YELLOW)			
			DETAIL 8	DETAIL 12	DETAIL 21	DETAIL 25	DETAIL 25A	DETAIL 27B	DETAIL 36	DETAIL 36A/B	12" WHITE LIMIT LINE	ARROWS AND SYMBOLS				ARRAY TYPE 'TU21'	ARRAY TYPE 'TS14'	ABSORB 350(7)	TYPE "C", "P" OR "R"	TYPE A	TYPE C	TYPE D	TYPE G	TYPE H						
			ft	ft	ft	ft	ft	ft	ft	ft	ft	sf	ft	ft	EA	EA	EA	EA	EA	EA	EA	EA	EA	EA	EA	ft	ft	sf	EA	
	STAGE 4 CONT.																														
SC-25	DUNLAP BLVD	-		-	1,800	-	-	950	-	-	-	-	950	950	-	-	-	1	1	-	-	-	-	-	-	-	-	1,140	-	5 & 11
SC-26	DUNLAP BLVD	-	-	-	2,220	-	-	1,200	-	-	-	-	1,200	1,200	-	-	-	-	-	-	-	-	-	-	-	-	-	1,490	-	5 & 11
SC-27	DUNLAP BLVD	-	-	-	1,060	-	-	550	-	-	-	-	400	400	-	-	14	-	2	-	-	-	-	-	-	-	-	740	-	5 & 11
SC-27	206+00 TO 218+00	A	-	2,400	-	1,200	-	1,200	-	-	-	-	1,200	1,200	-	-	-	-	-	-	-	-	50	25	-	3,600	1,200	-	75	5
SC-28	218+00 TO 230+00	A	-	2,400	-	1,200	-	1,200	-	-	-	-	1,200	1,200	-	-	-	-	-	-	-	-	50	25	-	3,600	1,200	-	75	5
SC-29	230+00 TO 238+20	A	-	1,300	-	650	-	720	-	-	-	-	700	700	-	-	14	-	2	-	-	-	30	15	-	1,950	650	-	43	5
-	-	-	-	-	-	-	-	-	-	-	-	-	-	-	-	-	-	-	-	-	-	-	-	-	-	-	-	-	-	-
	STAGE 5																		-							7,050	2,350	-	150	6
SC-30	144+00 TO 158+00	A	-	1,000	-	500	-	500	-	-	-	-	865	865	-	-	-	-	-	-	-	-	28	14	-	1,800	600	-	42	-
SC-30	YUCAIPA ON RAMP	Y-1	-	-	-	-	900	1,400	-	500	-	-	865	865	-	-	-	-	2	-	-	-	-	38	26	-	-	-	-	-
SC-31	YUCAIP ON RAMP	Y-1	-	-	-	-	600	500	-	-	-	-	520	520	-	-	14	-	2	-	-	-	-	-	2	100	100	-	2	-
SC-31	158+00 TO 170+00	A	-	-	-	-	-	-	-	-	-	-	140	140	-	-	-	-	-	-	-	-	-	-	-	-	-	-	-	7
SC-31	YUCAIPA OFF RAMP	Y-2	-	-	-	-	180	180	-	-	-	-	280	280	-	-	-	-	-	-	-	-	-	-	-	-	-	-	-	-
SC-32	YUCAIPA OFF RAMP	Y-2	-	-	-	-	200	450	160	-	-	-	560	560	-	21	-	-	3	-	-	-	9	3	3	800	-	-	-	-
SC-32	170+00 TO 177+40	A	-	-	-	-	-	300	-	-	-	-	380	380	-	-	-	-	-	-	-	-	-	-	1	-	-	-	-	7
-	-	-	-	-	-	-	-	-	-	-	-	-	-	-	-	-	-	-	-	-	-	-	-	-	-	-	-	-	-	-
-	-	-	-	-	-	-	-	-	-	-	-	-	-	-	-	-	-	-	-	-	-	-	-	-	-	-	-	-	-	-
	STAGE 6	-	-																							2,700	900	-	60	8
SC-33	YUCAIPA ON RAMP	A	-	-	-	500	-	-	-	-	-	-	280	280	-	-	-	-	-	-	-	-	-	11	-	-	-	-	-	9
SC-33	147+00 TO 158+00	A	-	-	-	500	-	-	-	-	-	-	100	100	-	-	-	-	-	-	-	-	-	11	-	-	-	-	-	9
SC-34	158+00 TO 170+10	A	-	-	-	1,200	-	-	-	-	-	-	200	200	4	-	14	-	2	-	-	-	-	25	22	3,600	1,200	-	75	10
SC-34	YUCAIPA ON RAMP	-	-	-	-	-	-	-	-	-	-	-	500	500	-	-	14	-	2	-	-	-	-	-	-	-	-	-	-	-
SC-35	170+00 TO 182+00	A	-	-	-	1,200	-	-	-	-	-	-	-	-	3	-	-	-	-	-	-	-	-	25	24	3,600	1,200	-	75	10
SC-36	182+00 TO 194+00	A	-	-	-	1,200	-	-	-	-	-	-	-	-	3	-	-	-	-	-	-	-	-	25	24	3,600	1,200	-	75	10
SHEET SUBTOTALS		-	-	7,100	5,080	8,650	1,880	9,220	160	500	-	-	10,340	10,340	10	21	70	1	16	-	-	-	168	206	102	32,400	10,600	3,370	672	X
SHEET TOTALS				102,410									10,340	10,340	10	21	70	1	16	-	374				102	32,400	10,600	3,370	672	X

THIS PLAN IS ACCURATE FOR TRAFFIC HANDLING ONLY

STAGE CONSTRUCTION AND TRAFFIC HANDLING QUANTITIES

SCQ-2

REVISED BY | DATE REVISED

CALCULATED-DESIGNED BY | CHECKED BY

CONSULTANT FUNCTIONAL SUPERVISOR: ED KOUZI

STATE OF CALIFORNIA - DEPARTMENT OF TRANSPORTATION

Caltrans

LAST REVISION 00-00-00 | DATE PLOTTED => 7/14/2009 | TIME PLOTTED => 9:51:05 AM

RELATIVE BORDER SCALE IS IN INCHES 0 1 2 3

USERNAME => SmithJH
DGN FILE => ...\0f150mf002.dgn

CU 08220 | EA 0F1500

Dist	COUNTY	ROUTE	POST MILES TOTAL PROJECT	SHEET No.	TOTAL SHEETS
8	SBd	10	33.3/R36.9	XXX	XXX

REGISTERED CIVIL ENGINEER DATE

PLANS APPROVAL DATE

REGISTERED PROFESSIONAL ENGINEER No. Exp. CIVIL STATE OF CALIFORNIA

THE STATE OF CALIFORNIA OR ITS OFFICERS OR AGENTS SHALL NOT BE RESPONSIBLE FOR THE ACCURACY OR COMPLETENESS OF ELECTRONIC COPIES OF THIS PLAN SHEET.

SANBAG
1170 WEST 3RD STREET
2ND FLOOR
SAN BERNARDINO, CA 92410

AECOM
999 W. TOWN & COUNTRY RD
ORANGE, CA 92868

TRAFFIC HANDLING QUANTITIES

SHEET NO	STATION LOCATION	STA LINE	TEMP TRAFFIC STRIPE (PAINT)								TEMP PAVEMENT MARKING (PAINT)		TEMP RAILING (TYPE K)	TRAFFIC SCREEN	BARRICADE TYPE III	TEMP CRASH CUSHION MODULE			MARKER PANEL (N)	PAVEMENT MARKER (NON-REFLECTIVE)	TEMP PAVEMENT MARKER (REFLECTIVE)				SURFACE MOUNTED CHANNELIZERS	THERMOPLASTIC		REMOVE PAINTED PAVEMENT STRIPING & MARKING	REMOVE PAVEMENT MARKER	SEE NOTE
			4" BROKEN WHITE		4" SOLID YELLOW			4" SOLID WHITE	8" SOLID WHITE		12" WHITE LIMIT LINE	ARROWS AND SYMBOLS				ARRAY TYPE 'TU21'	ARRAY TYPE 'TS14'	ABSORB 350(7)	TYPE "P" OR "R"	TYPE A	TYPE C	TYPE D	TYPE G	TYPE H		REMOVE TRAFFIC STRIPE (WHITE)	REMOVE TRAFFIC STRIPE (YELLOW)			
			DETAIL 8	DETAIL 12	DETAIL 21	DETAIL 25	DETAIL 25A	DETAIL 27B	DETAIL 36	DETAIL 36A/B																					
			ft	ft	ft	ft	ft	ft	ft	ft	ft	sf	ft	ft	EA	EA	EA	EA	EA	EA	EA	EA	EA	EA	EA	ft	ft	sf	EA	
	STAGE 6 CONT.	-	-	-	-	-	-	-	-	-	-	-	-	-	-	-	-	-	-	-	-	-	-	-	-	-	-	-	-	-	-
SC-37	194+00 TO 206+00	A	-	-	-	1,200	-	-	-	-	-	-	600	600	3	-	14	-	2	-	-	-	-	25	17	3,600	1,920	-	75	10
SC-38	206+00 TO 218+00	A	-	-	-	1,200	-	-	-	-	-	-	670	670	2	-	-	-	-	-	-	-	-	25	11	3,600	2,600	-	75	10
SC-39	218+00 TO 230+00	A	-	-	-	1,200	-	-	-	-	-	-	1,200	1,200	-	-	-	-	-	-	-	-	-	25	-	3,600	1,200	-	75	10
SC-40	230+00 TO 237+92	A	-	-	-	1,200	-	270	270	-	-	-	705	705	-	-	14	-	3	-	-	-	-	17	5	800	800	-	51	10
-	SEE NOTE 11	-	-	-	-	-	-	-	-	-	-	-	-	-	-	-	-	-	-	-	-	-	-	-	-	8,500	8,500	-	178	11
-	-	-	-	-	-	-	-	-	-	-	-	-	-	-	-	-	-	-	-	-	-	-	-	-	-	-	-	-	-	-
-	-	-	-	-	-	-	-	-	-	-	-	-	-	-	-	-	-	-	-	-	-	-	-	-	-	-	-	-	-	-
-	-	-	-	-	-	-	-	-	-	-	-	-	-	-	-	-	-	-	-	-	-	-	-	-	-	-	-	-	-	-
-	-	-	-	-	-	-	-	-	-	-	-	-	-	-	-	-	-	-	-	-	-	-	-	-	-	-	-	-	-	-
-	-	-	-	-	-	-	-	-	-	-	-	-	-	-	-	-	-	-	-	-	-	-	-	-	-	-	-	-	-	-
-	-	-	-	-	-	-	-	-	-	-	-	-	-	-	-	-	-	-	-	-	-	-	-	-	-	-	-	-	-	-
-	-	-	-	-	-	-	-	-	-	-	-	-	-	-	-	-	-	-	-	-	-	-	-	-	-	-	-	-	-	-
-	-	-	-	-	-	-	-	-	-	-	-	-	-	-	-	-	-	-	-	-	-	-	-	-	-	-	-	-	-	-
-	-	-	-	-	-	-	-	-	-	-	-	-	-	-	-	-	-	-	-	-	-	-	-	-	-	-	-	-	-	-
-	-	-	-	-	-	-	-	-	-	-	-	-	-	-	-	-	-	-	-	-	-	-	-	-	-	-	-	-	-	-
-	-	-	-	-	-	-	-	-	-	-	-	-	-	-	-	-	-	-	-	-	-	-	-	-	-	-	-	-	-	-
-	-	-	-	-	-	-	-	-	-	-	-	-	-	-	-	-	-	-	-	-	-	-	-	-	-	-	-	-	-	-
-	-	-	-	-	-	-	-	-	-	-	-	-	-	-	-	-	-	-	-	-	-	-	-	-	-	-	-	-	-	-
-	-	-	-	-	-	-	-	-	-	-	-	-	-	-	-	-	-	-	-	-	-	-	-	-	-	-	-	-	-	-
-	-	-	-	-	-	-	-	-	-	-	-	-	-	-	-	-	-	-	-	-	-	-	-	-	-	-	-	-	-	-
-	-	-	-	-	-	-	-	-	-	-	-	-	-	-	-	-	-	-	-	-	-	-	-	-	-	-	-	-	-	-
SHEET SUBTOTALS		-	-	-	-	4,800	-	270	270	-	-	-	2,860	2,860	5	-	28	-	5	-	-	-	-	92	33	20,100	15,020	-	454	-
Temp STRIPE SUBTOTALS		-	162	41,100	5,080	29,010	3,303	26,691	984	1,020	-	-	30,969	30,969	17	42	196	2	39	-	-	-	925	702	154	129,036	43,440	3,370	2,638	X
PROJECT TOTALS		-	107,350								-	-	30,969	30,969	17	42	196	2	39	-	1,627				154	129,036	43,440	3,370	2,638	X

NOTES:

10. REMOVE TEMPORARY STAGE 4 STRIPING IN CONFLICT WITH TEMPORARY STAGE 6 STRIPING.

11. REMOVE TEMPORARY STAGE 6 STRIPING FROM STA 153+00 TO STA 237+92 AFTER COMPLETION OF STAGE 6 WORK.

THIS PLAN IS ACCURATE FOR TRAFFIC HANDLING ONLY

STAGE CONSTRUCTION AND TRAFFIC HANDLING QUANTITIES

SCQ-3

REVISED BY | DATE REVISED

CALCULATED-DESIGNED BY | CHECKED BY

CONSULTANT FUNCTIONAL SUPERVISOR: ED KOUZI

STATE OF CALIFORNIA - DEPARTMENT OF TRANSPORTATION

Caltrans

LAST REVISION 00-00-00 | DATE PLOTTED => 7/14/2009 TIME PLOTTED => 9:51:07 AM

RELATIVE BORDER SCALE IS IN INCHES 0 1 2 3

USERNAME => SmithJH
DGN FILE => ...\0f150mf003.dgn

CU 08220 | EA 0F1500

Dist	COUNTY	ROUTE	POST MILES TOTAL PROJECT	SHEET No.	TOTAL SHEETS
8	SBd	10	33.3/R36.9	XXX	XXX

REGISTERED CIVIL ENGINEER DATE

PLANS APPROVAL DATE

REGISTERED PROFESSIONAL ENGINEER No. Exp. CIVIL STATE OF CALIFORNIA

THE STATE OF CALIFORNIA OR ITS OFFICERS OR AGENTS SHALL NOT BE RESPONSIBLE FOR THE ACCURACY OR COMPLETENESS OF ELECTRONIC COPIES OF THIS PLAN SHEET.

SANBAG
1170 WEST 3RD STREET
2ND FLOOR
SAN BERNARDINO, CA 92410

AECOM
999 W. TOWN & COUNTRY RD
ORANGE, CA 92868

CONSTRUCTION AREA SIGN QUANTITIES

SIGN NO	TYPE	PANEL SIZE INCHES x INCHES	No. OF POSTS & SIZE (INCHES)	STATIONARY SIGN	PORTABLE SIGN	REMARKS
1	W21-5b(CA)	36' x 36"	1-4x4	1	-	
2	W21-5b(CA)	36' x 36"	1-4x4	1	-	
3	W21-5b(CA)	36' x 36"	1-4x4	1	-	
4	W21-5b(CA)	36' x 36"	1-4x4	1	-	
5	W21-5b(CA)	36' x 36"	1-4x4	1	-	
6	W21-5b(CA)	36' x 36"	1-4x4	1	-	
7	C30(CA)	30" x 30"	-	-	1	BARRICADE MOUNTED
8	C30(CA)	30" x 30"	-	-	1	BARRICADE MOUNTED
9	C30(CA)	30" x 30"	-	-	1	BARRICADE MOUNTED
10	C30(CA)	30" x 30"	-	-	1	BARRICADE MOUNTED
11	C30(CA)	30" x 30"	-	-	1	BARRICADE MOUNTED
12	C30(CA)	30" x 30"	-	-	1	BARRICADE MOUNTED
13	C30(CA)	30" x 30"	-	-	1	BARRICADE MOUNTED
14	C30(CA)	30" x 30"	-	-	1	BARRICADE MOUNTED
15	C30(CA)	30" x 30"	-	-	1	BARRICADE MOUNTED
16	C30(CA)	30" x 30"	-	-	1	BARRICADE MOUNTED
17	C30(CA)	30" x 30"	-	-	1	BARRICADE MOUNTED
18	C30(CA)	30" x 30"	-	-	1	BARRICADE MOUNTED
19	C30(CA)	30" x 30"	-	-	1	BARRICADE MOUNTED
20	C30(CA)	30" x 30"	-	-	1	BARRICADE MOUNTED
21	C30(CA)	30" x 30"	-	-	1	BARRICADE MOUNTED
22	C30(CA)	30" x 30"	-	-	1	BARRICADE MOUNTED
23	W21-5bL	36' x 36"	1-4x4	1	-	-
-	-	-	-	-	-	
-	-	-	-	-	-	
-	-	-	-	-	-	
-	-	-	-	-	-	
-	-	-	-	-	-	
-	-	-	-	-	-	
-	-	-	-	-	-	
-	-	-	-	-	-	
-	-	-	-	-	-	
TOTALS		-	7-4x4	7	16	

TEMPORARY PAVEMENT AND EARTHWORK QUANTITES

STAGE NO	LOCATION/STA	HMA (TYPE A) C. F. 4"	HMA (TYPE A) C. F. 8"	C. F. ROADWAY EXCAVATION	C. F. EMBANKMENT (TEMPORARY) (N)	COLD PLANE AC PVMT (S. Y.)	NOTES
1	53+00 TO 64+00	1,100	0	1,100	0	0	-
1	67+00 TO 108+00	4,100	0	4,100	0	0	-
1	111+50 TO 139+50	2,800	0	2,800	0	0	-
3	212+00 TO 238+70	8,523	0	8,523	0	598	-
4	YUCIAPA ON RAMP	0	1,456	1,456	2,720 (N)	0	2
4	YUCIAPA OFF RAMP	0	1,521	1,521	1,200 (N)	0	2
TOTALS		16,523	2,977	46,161	3,920 (N)	598	2

TEMPORARY CL FENCE

STAGE NO	LOCATION/STA	INSTALL (L. F.)	REMOVE (L. F.)	NOTE
4	138+56 TO 146+22	1,033	1,033 (N)	3
4	184+70 TO 210+10 DUNLAP BLVD	2,568	2,568 (N)	3 & 4
TOTALS		3,601	3,601 (N)	

NOTES:

1. EXACT SIGN LOCATIONSTO BE DETERMINED BY THE ENGINEER.
2. REMOVE TEMPORARY HMA AND TEMPORARY EMBANKMENT AFTER COMPLETION OF STAGE 5 WORK.
3. REMOVE TEMPORARY CHAINLINK FENCE AFTER COMPLETION OF WORK.
4. INSTALL CHAINLINK FENCE BETWEEN K-RAIL AND CURB ON DUNLAP BLVD.

STAGE CONSTRUCTION AND TRAFFIC HANDLING QUANTITIES SCQ-4

REVISED BY | DATE REVISED

CALCULATED-DESIGNED BY | CHECKED BY

CONSULTANT FUNCTIONAL SUPERVISOR: ED KOUZI

STATE OF CALIFORNIA - DEPARTMENT OF TRANSPORTATION

Caltrans

LAST REVISION 00-00-00 | DATE PLOTTED => 7/14/2009 | TIME PLOTTED => 9:51:10 AM

RELATIVE BORDER SCALE IS IN INCHES 0 1 2 3

USERNAME => SmithJH
DGN FILE => ...\0f150mf004.dgn

CU 08220 | EA 0F1500

Dist	COUNTY	ROUTE	POST MILES TOTAL PROJECT	SHEET No.	TOTAL SHEETS
8	SBd	10	33.3/R36.9	XXX	XXX

REGISTERED CIVIL ENGINEER DATE

PLANS APPROVAL DATE

REGISTERED PROFESSIONAL ENGINEER No. Exp. CIVIL STATE OF CALIFORNIA

THE STATE OF CALIFORNIA OR ITS OFFICERS OR AGENTS SHALL NOT BE RESPONSIBLE FOR THE ACCURACY OR COMPLETENESS OF ELECTRONIC COPIES OF THIS PLAN SHEET.

SANBAG
1170 WEST 3RD STREET
2ND FLOOR
SAN BERNARDINO, CA 92410

AECOM
999 W. TOWN & COUNTRY RD
ORANGE, CA 92868

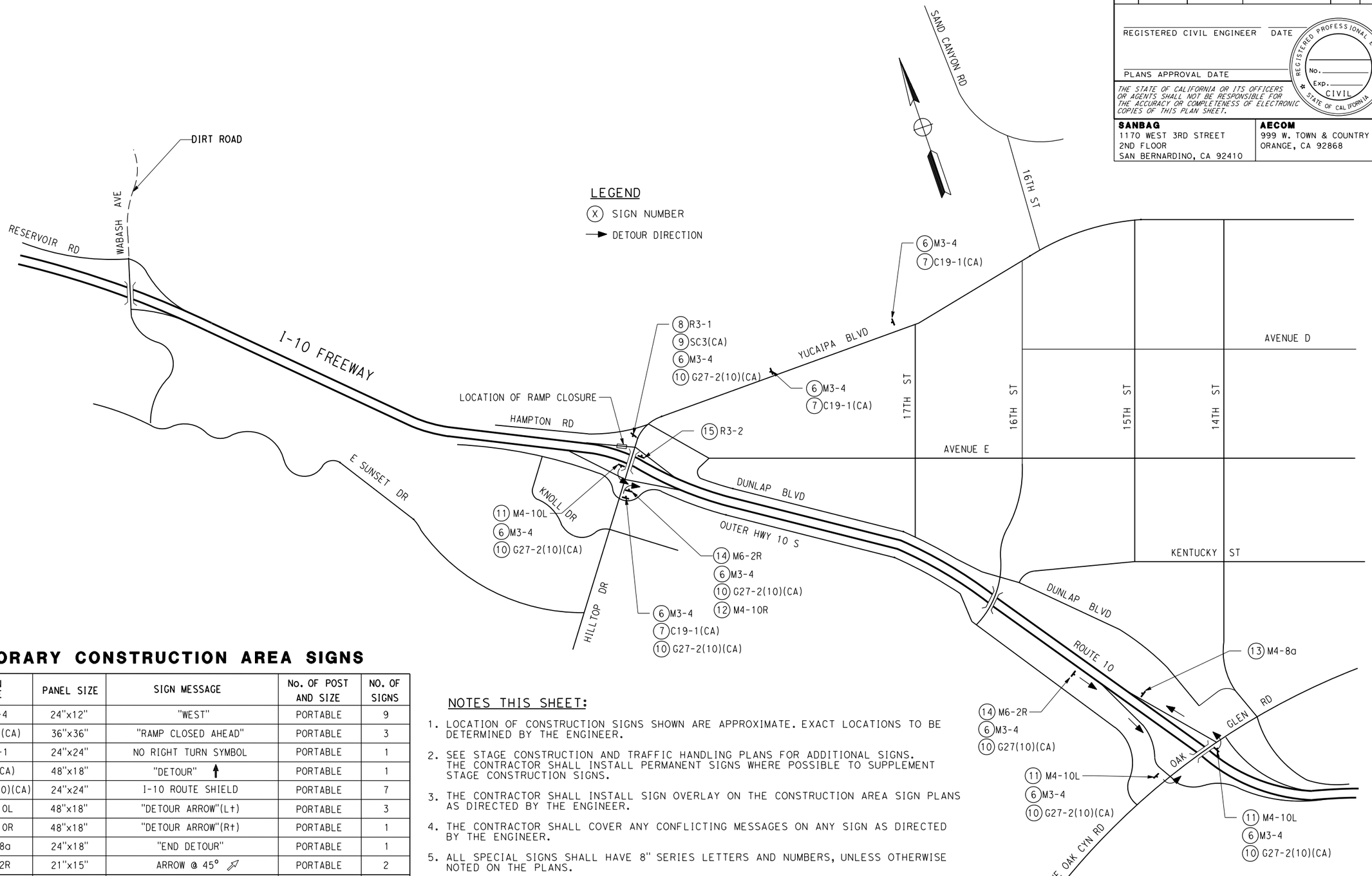

TEMPORARY CONSTRUCTION AREA SIGNS

SIGN NO.	SIGN CODE	PANEL SIZE	SIGN MESSAGE	No. OF POST AND SIZE	NO. OF SIGNS
(6)	M3-4	24"x12"	"WEST"	PORTABLE	9
(7)	C19-1(CA)	36"x36"	"RAMP CLOSED AHEAD"	PORTABLE	3
(8)	R3-1	24"x24"	NO RIGHT TURN SYMBOL	PORTABLE	1
(9)	SC3(CA)	48"x18"	"DETOUR" ↑	PORTABLE	1
(10)	G27-2(10)(CA)	24"x24"	I-10 ROUTE SHIELD	PORTABLE	7
(11)	M4-10L	48"x18"	"DETOUR ARROW"(L↑)	PORTABLE	3
(12)	M4-10R	48"x18"	"DETOUR ARROW"(R↑)	PORTABLE	1
(13)	M4-8a	24"x18"	"END DETOUR"	PORTABLE	1
(14)	M6-2R	21"x15"	ARROW @ 45° ⇗	PORTABLE	2
(15)	R3-2	24"x24"	NO LEFT TURN SYMBOL	PORTABLE	1
TOTAL					29

NOTE: SIGN LOCATIONS SHOWN ARE APPROXIMATE. EXACT LOCATIONS TO BE DETERMINED BY THE ENGINEER

NOTES THIS SHEET:

1. LOCATION OF CONSTRUCTION SIGNS SHOWN ARE APPROXIMATE. EXACT LOCATIONS TO BE DETERMINED BY THE ENGINEER.
2. SEE STAGE CONSTRUCTION AND TRAFFIC HANDLING PLANS FOR ADDITIONAL SIGNS. THE CONTRACTOR SHALL INSTALL PERMANENT SIGNS WHERE POSSIBLE TO SUPPLEMENT STAGE CONSTRUCTION SIGNS.
3. THE CONTRACTOR SHALL INSTALL SIGN OVERLAY ON THE CONSTRUCTION AREA SIGN PLANS AS DIRECTED BY THE ENGINEER.
4. THE CONTRACTOR SHALL COVER ANY CONFLICTING MESSAGES ON ANY SIGN AS DIRECTED BY THE ENGINEER.
5. ALL SPECIAL SIGNS SHALL HAVE 8" SERIES LETTERS AND NUMBERS, UNLESS OTHERWISE NOTED ON THE PLANS.
6. ALL M3-4 SIGNS SHALL HAVE WHITE LETTERS ON BLUE BACKGROUND.
7. RAMP CLOSURES ARE TO OCCUR ONLY DURING SET UP OF TRAFFIC CONTROL EQUIPMENT FOR RAMP CONSTRUCTION WORK DURING STAGES 4, 5 & 6. CONTRACTOR MAY ALSO INSTALL IRRIGATION CROSSOVERS DURING THE RAMP CLOSURE.

THIS PLAN IS ACCURATE FOR CONSTRUCTION AREA SIGN WORK ONLY

DETOUR PLAN
YUCAIPA BLVD WB ON RAMP CLOSURE

NO SCALE

DE-1

REVISED BY	DATE REVISED

CALCULATED-DESIGNED BY
CHECKED BY

CONSULTANT FUNCTIONAL SUPERVISOR
ED KOUZI

STATE OF CALIFORNIA - DEPARTMENT OF TRANSPORTATION
Caltrans

LAST REVISION 00-00-00
DATE PLOTTED => 7/14/2009
TIME PLOTTED => 9:51:13 AM

RELATIVE BORDER SCALE IS IN INCHES 0 1 2 3

USERNAME => SmithJH
DGN FILE => ...\0f150mg001.dgn

CU 08220

EA 0F1500

Dist	COUNTY	ROUTE	POST MILES TOTAL PROJECT	SHEET No.	TOTAL SHEETS
8	SBd	10	33.3/R36.9	XXX	XXX

REGISTERED CIVIL ENGINEER DATE

PLANS APPROVAL DATE

REGISTERED PROFESSIONAL ENGINEER No. Exp. CIVIL STATE OF CALIFORNIA

THE STATE OF CALIFORNIA OR ITS OFFICERS OR AGENTS SHALL NOT BE RESPONSIBLE FOR THE ACCURACY OR COMPLETENESS OF ELECTRONIC COPIES OF THIS PLAN SHEET.

SANBAG
1170 WEST 3RD STREET
2ND FLOOR
SAN BERNARDINO, CA 92410

AECOM
999 W. TOWN & COUNTRY RD
ORANGE, CA 92868

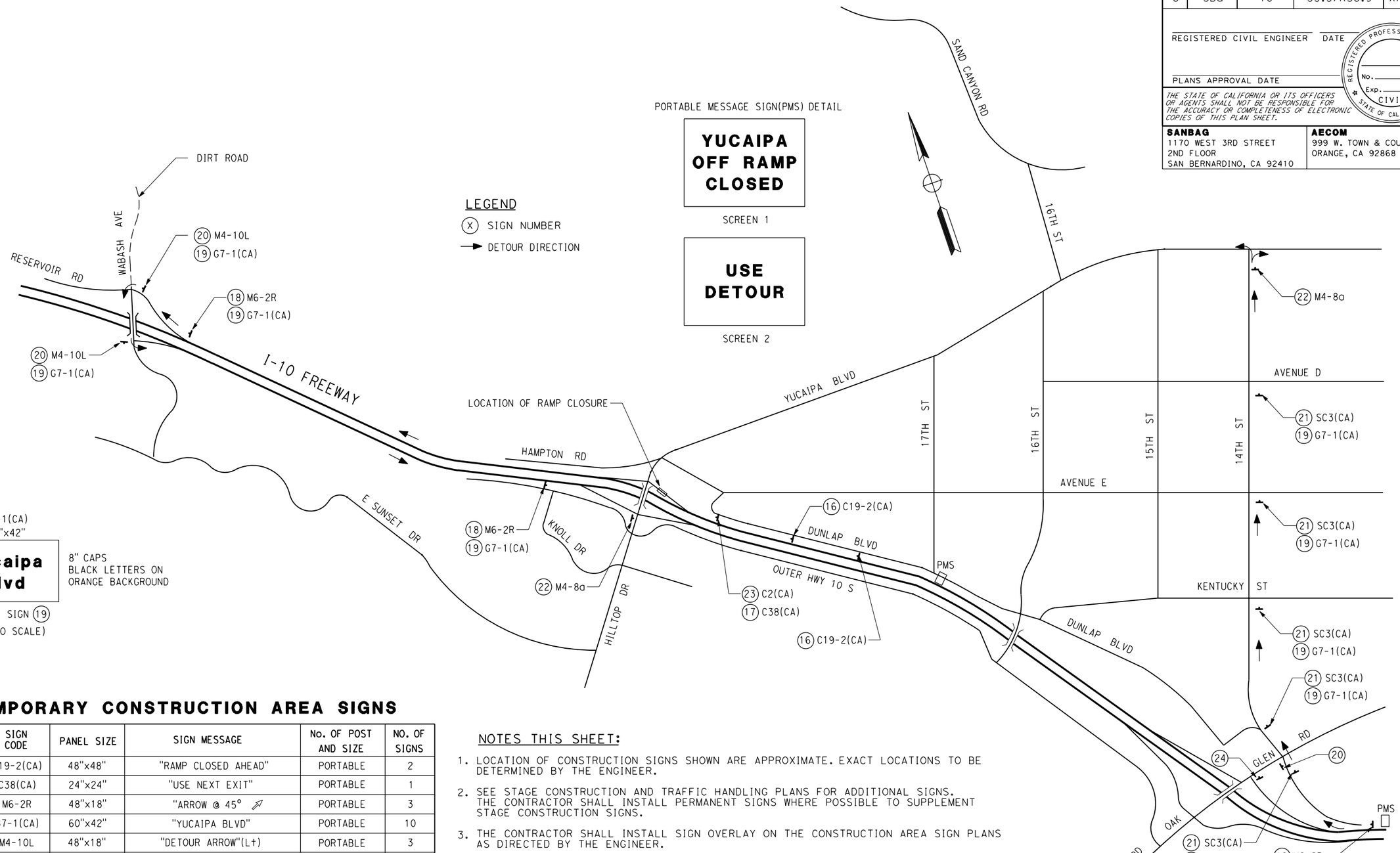

G7-1(CA)
60"x42"

Yucaipa Blvd

8" CAPS
BLACK LETTERS ON
ORANGE BACKGROUND

DETAIL SIGN (19)
(NOT TO SCALE)

TEMPORARY CONSTRUCTION AREA SIGNS

SIGN NO.	SIGN CODE	PANEL SIZE	SIGN MESSAGE	No. OF POST AND SIZE	NO. OF SIGNS
(16)	C19-2(CA)	48"x48"	"RAMP CLOSED AHEAD"	PORTABLE	2
(17)	C38(CA)	24"x24"	"USE NEXT EXIT"	PORTABLE	1
(18)	M6-2R	48"x18"	"ARROW @ 45°"	PORTABLE	3
(19)	G7-1(CA)	60"x42"	"YUCAIPA BLVD"	PORTABLE	10
(20)	M4-10L	48"x18"	"DETOUR ARROW"(Lt)	PORTABLE	3
(21)	SC3(CA)	48"x18"	"DETOUR"	PORTABLE	5
(22)	M4-8a	24"x18"	"END DETOUR"	PORTABLE	2
(23)	C2(CA)	48"x30"	"RAMP CLOSED"	PORTABLE	1
(24)	M4-10R	48"x30"	DETOUR ARROW	PORTABLE	1
TOTAL					28

NOTE: SIGN LOCATIONS SHOWN ARE APPROXIMATE. EXACT LOCATIONS TO BE DETERMINED BY THE ENGINEER

NOTES THIS SHEET:

1. LOCATION OF CONSTRUCTION SIGNS SHOWN ARE APPROXIMATE. EXACT LOCATIONS TO BE DETERMINED BY THE ENGINEER.
2. SEE STAGE CONSTRUCTION AND TRAFFIC HANDLING PLANS FOR ADDITIONAL SIGNS. THE CONTRACTOR SHALL INSTALL PERMANENT SIGNS WHERE POSSIBLE TO SUPPLEMENT STAGE CONSTRUCTION SIGNS.
3. THE CONTRACTOR SHALL INSTALL SIGN OVERLAY ON THE CONSTRUCTION AREA SIGN PLANS AS DIRECTED BY THE ENGINEER.
4. THE CONTRACTOR SHALL COVER ANY CONFLICTING MESSAGES ON ANY SIGN AS DIRECTED BY THE ENGINEER.
5. ALL SPECIAL SIGNS SHALL HAVE 8" SERIES LETTERS AND NUMBERS, UNLESS OTHERWISE NOTED ON THE PLANS.
6. RAMP CLOSURES ARE TO OCCUR ONLY DURING SET UP OF TRAFFIC CONTROL EQUIPMENT FOR RAMP CONSTRUCTION WORK DURING STAGES 4, 5 & 6.

THIS PLAN IS ACCURATE FOR CONSTRUCTION AREA SIGN WORK ONLY

DETOUR PLAN
YUCIAPA BLVD WB
OFF RAMP CLOSURE

NO SCALE

DE-2

REVISED BY | DATE REVISED
CALCULATED-DESIGNED BY | CHECKED BY
CONSULTANT FUNCTIONAL SUPERVISOR: ED KOUZI

STATE OF CALIFORNIA - DEPARTMENT OF TRANSPORTATION
Caltrans

LAST REVISION 00-00-00 | DATE PLOTTED => 7/14/2009 | TIME PLOTTED => 9:51:15 AM

RELATIVE BORDER SCALE IS IN INCHES 0 1 2 3

USERNAME => SmithJH
DGN FILE => ...\0f150mg002.dgn

CU 08220 | EA 0F1500

Dist	COUNTY	ROUTE	POST MILES TOTAL PROJECT	SHEET No.	TOTAL SHEETS
8	SBd	10	33.3/R36.9	XXX	XXX

REGISTERED CIVIL ENGINEER DATE

PLANS APPROVAL DATE

REGISTERED PROFESSIONAL ENGINEER No. Exp. CIVIL STATE OF CALIFORNIA

THE STATE OF CALIFORNIA OR ITS OFFICERS OR AGENTS SHALL NOT BE RESPONSIBLE FOR THE ACCURACY OR COMPLETENESS OF ELECTRONIC COPIES OF THIS PLAN SHEET.

SANBAG
1170 WEST 3RD STREET
2ND FLOOR
SAN BERNARDINO, CA 92410

AECOM
999 W. TOWN & COUNTRY RD
ORANGE, CA 92868

LEGEND:

STRIPING DETAIL TO BE INSTALLED ..... B=BEGIN E=END RT=REMOVE Temp → B ⟨25⟩ ← CALTRANS STRIPE DETAIL NO.

DIRECTION OF TRAFFIC (NOT A PAVEMENT MARKING)

DELINEATOR TYPE F CLASS I SEE STD. PLAN A73C ..... F

DELINEATOR TYPE G CLASS I SEE STD. PLAN A73C ..... G

OBJECT MARKER OM2-1V

RIGHT ARROW (TYPE IIIR) .....

DIRECTION OF TRAVEL ARROW (TYPE I) .....

LEFT/RIGHT THRU ARROW (TYPE IIB) .....

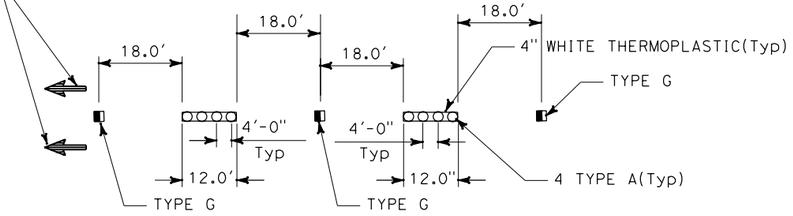

DETAIL 13 (MOD)

NOT TO SCALE

NOTE: INSTALL MARKERS PRIOR TO INSTALLING THERMOPLASTIC SEE PD-1 THROUGH PD-16. SEE STD. PLANS A20A THROUGH A20D FOR RAISED PAVEMENT MARKER TYPES

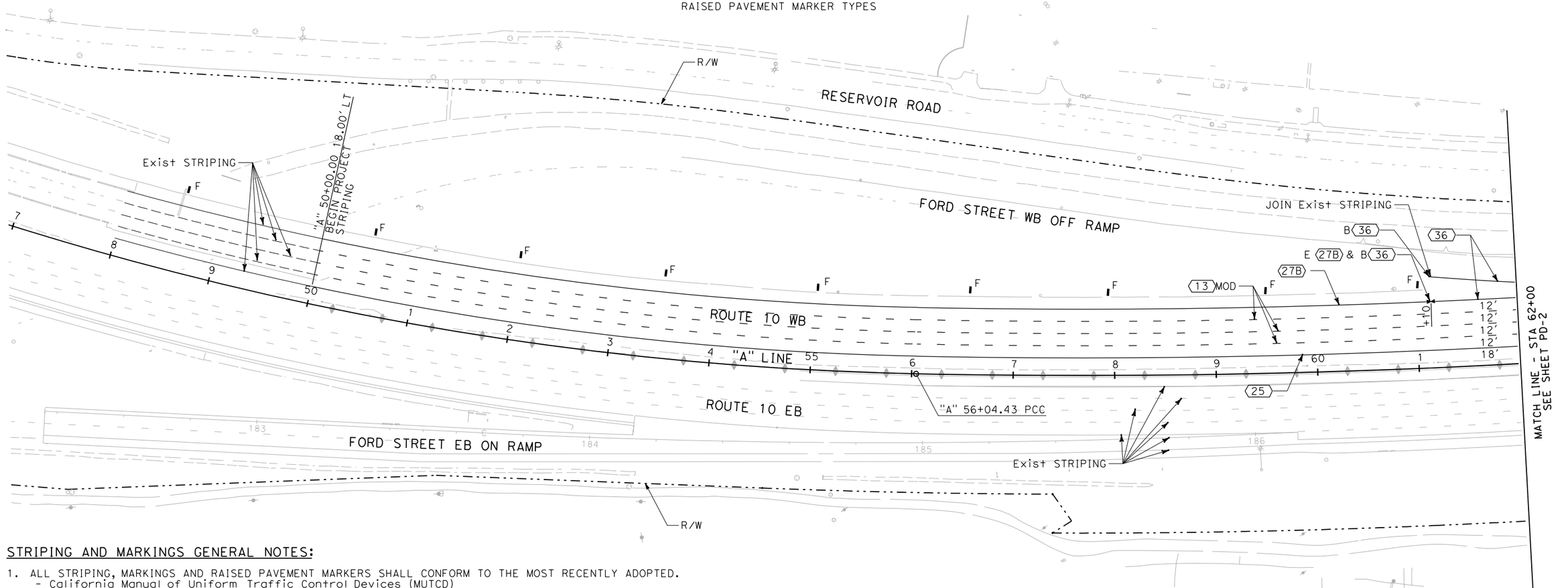

STRIPING AND MARKINGS GENERAL NOTES:

1. ALL STRIPING, MARKINGS AND RAISED PAVEMENT MARKERS SHALL CONFORM TO THE MOST RECENTLY ADOPTED.
   - California Manual of Uniform Traffic Control Devices (MUTCD)
   - CALTRANS Standard Plans and Specifications
2. ALL WORK WITHIN THE CALTRANS RIGHT OF WAY SHALL BE IN CONFORMANCE WITH THE STANDARD SPECIAL PROVISIONS AND SHALL BE INSPECTED BY THE CALTRANS FIELD ENGINEER.
3. CONTRACTOR SHALL REMOVE ALL CONFLICTING STRIPING, PAVEMENT MARKINGS AND LEGENDS BY SANDBLASTING AND/OR GRINDING. ANY DEBRIS SHALL BE PROMPTLY REMOVED BY THE CONTRACTOR.
4. ALL PAVEMENT LEGENDS AND ARROWS SHALL BE SPRAYABLE THERMOPLASTIC.
5. ALL REMOVALS OF EXISTING AND TEMPORARY STRIPING AND MARKERS ARE SHOWN ON SC AND SCQ SHEETS.

THIS PLAN ACCURATE FOR PAVEMENT DELNEATION ONLY

PAVEMENT DELINEATION PLAN

SCALE 1"=50'

PD-1

REVISED BY	DATE REVISED

CALCULATED-DESIGNED BY

CHECKED BY

CONSULTANT FUNCTIONAL SUPERVISOR: ED KOUZI

STATE OF CALIFORNIA - DEPARTMENT OF TRANSPORTATION

Caltrans

LAST REVISION 00-00-00

DATE PLOTTED => 7/14/2009
TIME PLOTTED => 9:51:18 AM

RELATIVE BORDER SCALE IS IN INCHES 0 1 2 3

USERNAME => SmithJH
DGN FILE => ...\0f150na001.dgn

CU 08220

EA 0F1500

Dist	COUNTY	ROUTE	POST MILES TOTAL PROJECT	SHEET No.	TOTAL SHEETS
8	SBd	10	33.3/R36.9	XXX	XXX

REGISTERED CIVIL ENGINEER DATE

PLANS APPROVAL DATE

REGISTERED PROFESSIONAL ENGINEER No. Exp. CIVIL STATE OF CALIFORNIA

THE STATE OF CALIFORNIA OR ITS OFFICERS OR AGENTS SHALL NOT BE RESPONSIBLE FOR THE ACCURACY OR COMPLETENESS OF ELECTRONIC COPIES OF THIS PLAN SHEET.

SANBAG
1170 WEST 3RD STREET
2ND FLOOR
SAN BERNARDINO, CA 92410

AECOM
999 W. TOWN & COUNTRY RD
ORANGE, CA 92868

NOTES:

1. SEE PD-1 FOR LEGEND.

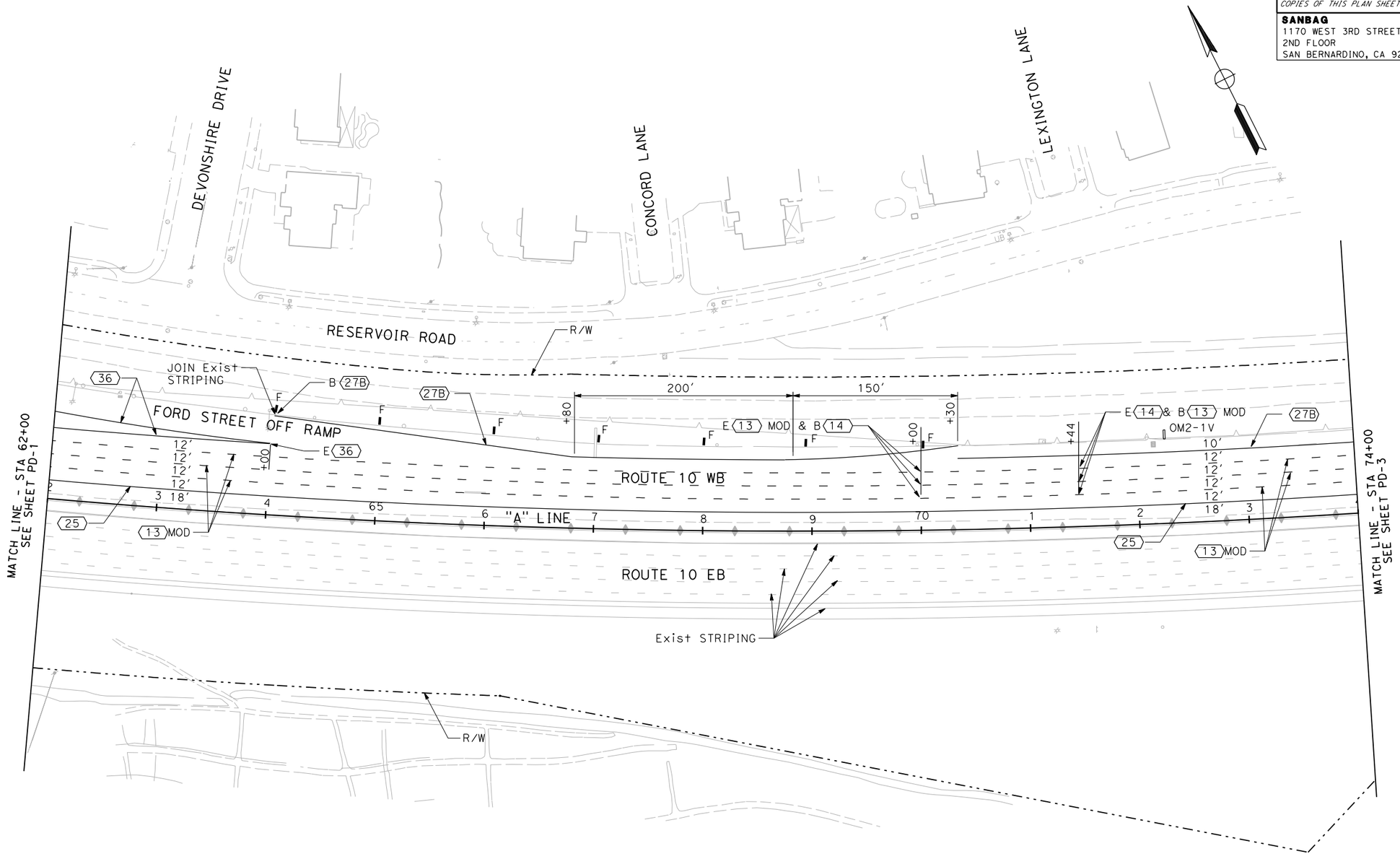

THIS PLAN ACCURATE FOR PAVEMENT DELINEATION ONLY

PAVEMENT DELINEATION PLAN

SCALE 1"=50'

PD-2

STATE OF CALIFORNIA - DEPARTMENT OF TRANSPORTATION

Caltrans

CONSULTANT FUNCTIONAL SUPERVISOR: ED KOUZI

CALCULATED-DESIGNED BY

CHECKED BY

REVISED BY

DATE REVISED

LAST REVISION 00-00-00

DATE PLOTTED => 7/14/2009
TIME PLOTTED => 9:51:19 AM

RELATIVE BORDER SCALE IS IN INCHES 0 1 2 3

USERNAME => SmithJH
DGN FILE => ...\0f150na002.dgn

CU 08220

EA 0F1500

Dist	COUNTY	ROUTE	POST MILES TOTAL PROJECT	SHEET No.	TOTAL SHEETS
8	SBd	10	33.3/R36.9	XXX	XXX

REGISTERED CIVIL ENGINEER DATE

PLANS APPROVAL DATE

REGISTERED PROFESSIONAL ENGINEER No. Exp. CIVIL STATE OF CALIFORNIA

THE STATE OF CALIFORNIA OR ITS OFFICERS OR AGENTS SHALL NOT BE RESPONSIBLE FOR THE ACCURACY OR COMPLETENESS OF ELECTRONIC COPIES OF THIS PLAN SHEET.

SANBAG
1170 WEST 3RD STREET
2ND FLOOR
SAN BERNARDINO, CA 92410

AECOM
999 W. TOWN & COUNTRY RD
ORANGE, CA 92868

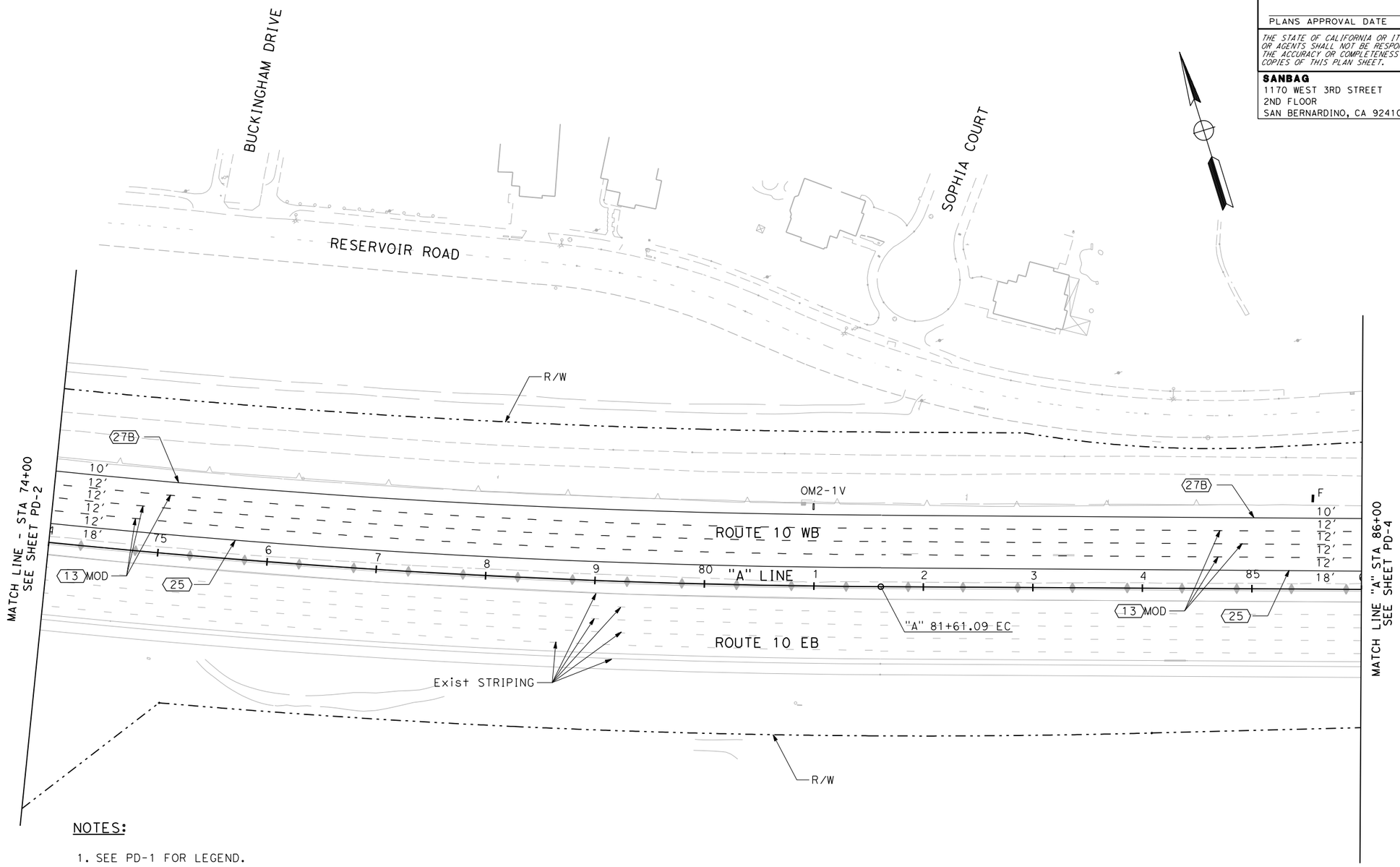

NOTES:

1. SEE PD-1 FOR LEGEND.

THIS PLAN IS ACCURATE FOR PAVEMENT DELINEATION ONLY

PAVEMENT DELINEATION PLAN

SCALE 1"=50′

PD-3

REVISED BY	DATE REVISED

CALCULATED-DESIGNED BY
CHECKED BY

CONSULTANT FUNCTIONAL SUPERVISOR
ED KOUZI

STATE OF CALIFORNIA - DEPARTMENT OF TRANSPORTATION
Caltrans

LAST REVISION 00-00-00
DATE PLOTTED => 7/14/2009
TIME PLOTTED => 9:51:20 AM

RELATIVE BORDER SCALE IS IN INCHES 0 1 2 3

USERNAME => SmithJH
DGN FILE => ...\0f150na003.dgn

CU 08220

EA 0F1500

Dist	COUNTY	ROUTE	POST MILES TOTAL PROJECT	SHEET No.	TOTAL SHEETS
8	SBd	10	33.3/R36.9	XXX	XXX

REGISTERED CIVIL ENGINEER DATE

PLANS APPROVAL DATE

REGISTERED PROFESSIONAL ENGINEER No. Exp. CIVIL STATE OF CALIFORNIA

THE STATE OF CALIFORNIA OR ITS OFFICERS OR AGENTS SHALL NOT BE RESPONSIBLE FOR THE ACCURACY OR COMPLETENESS OF ELECTRONIC COPIES OF THIS PLAN SHEET.

SANBAG
1170 WEST 3RD STREET
2ND FLOOR
SAN BERNARDINO, CA 92410

AECOM
999 W. TOWN & COUNTRY RD
ORANGE, CA 92868

NOTES:

1. SEE PD-1 FOR LEGEND.

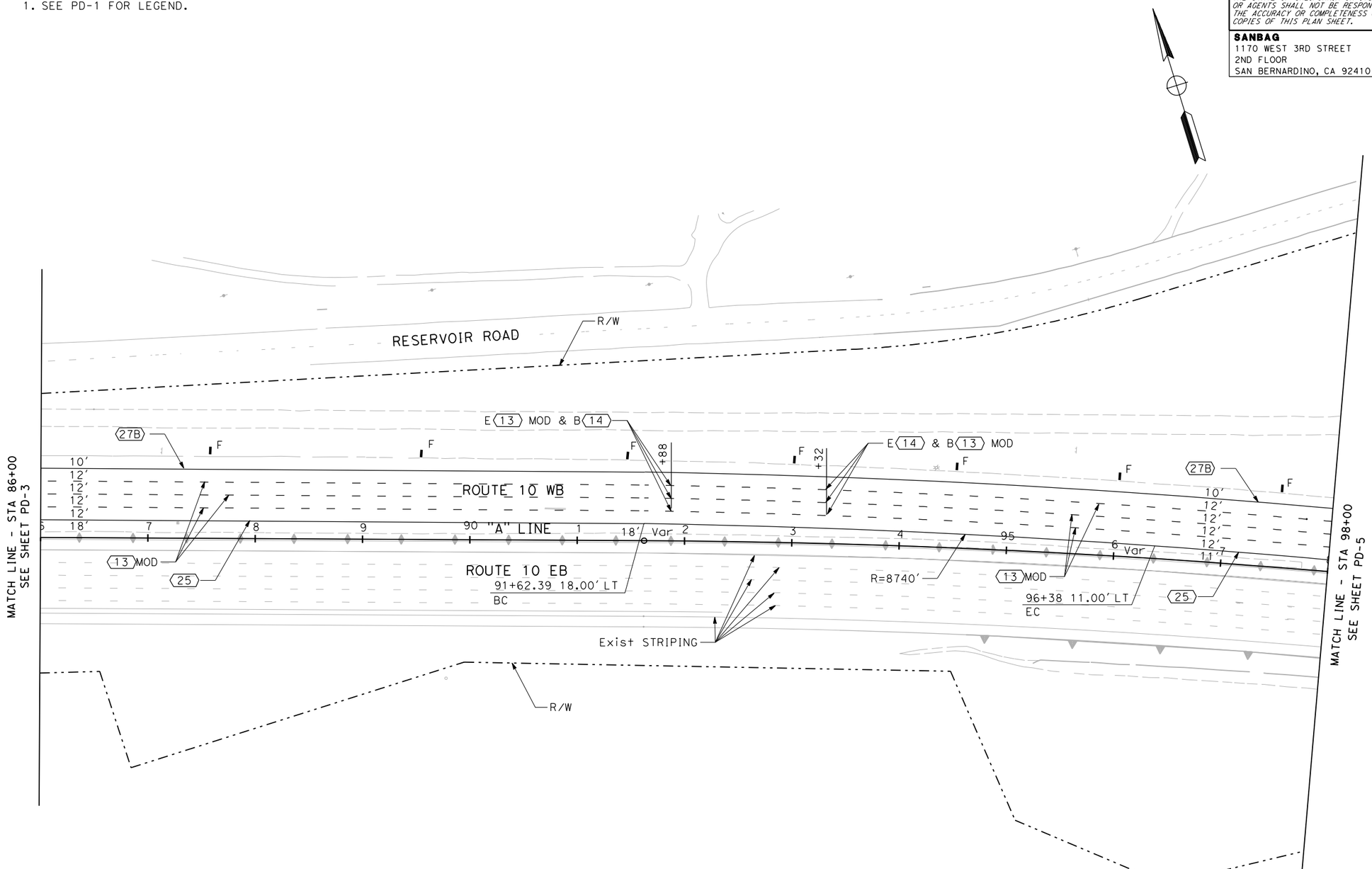

THIS PLAN ACCURATE FOR PAVEMENT DELINEATION ONLY

PAVEMENT DELINEATION PLAN

SCALE 1"=50'

PD-4

REVISED BY	DATE REVISED

CALCULATED-DESIGNED BY
CHECKED BY

CONSULTANT FUNCTIONAL SUPERVISOR
ED KOUZI

STATE OF CALIFORNIA - DEPARTMENT OF TRANSPORTATION
Caltrans

LAST REVISION 00-00-00
DATE PLOTTED => 7/14/2009
TIME PLOTTED => 9:51:22 AM

RELATIVE BORDER SCALE IS IN INCHES 0 1 2 3

USERNAME => SmithJH
DGN FILE => ...\0f150na004.dgn

CU 08220

EA 0F1500

Dist	COUNTY	ROUTE	POST MILES TOTAL PROJECT	SHEET No.	TOTAL SHEETS
8	SBd	10	33.3/R36.9	XXX	XXX

REGISTERED CIVIL ENGINEER DATE

PLANS APPROVAL DATE

REGISTERED PROFESSIONAL ENGINEER No. Exp. CIVIL STATE OF CALIFORNIA

THE STATE OF CALIFORNIA OR ITS OFFICERS OR AGENTS SHALL NOT BE RESPONSIBLE FOR THE ACCURACY OR COMPLETENESS OF ELECTRONIC COPIES OF THIS PLAN SHEET.

SANBAG
1170 WEST 3RD STREET
2ND FLOOR
SAN BERNARDINO, CA 92410

AECOM
999 W. TOWN & COUNTRY RD
ORANGE, CA 92868

NOTES:

1. SEE PD-1 FOR LEGEND.

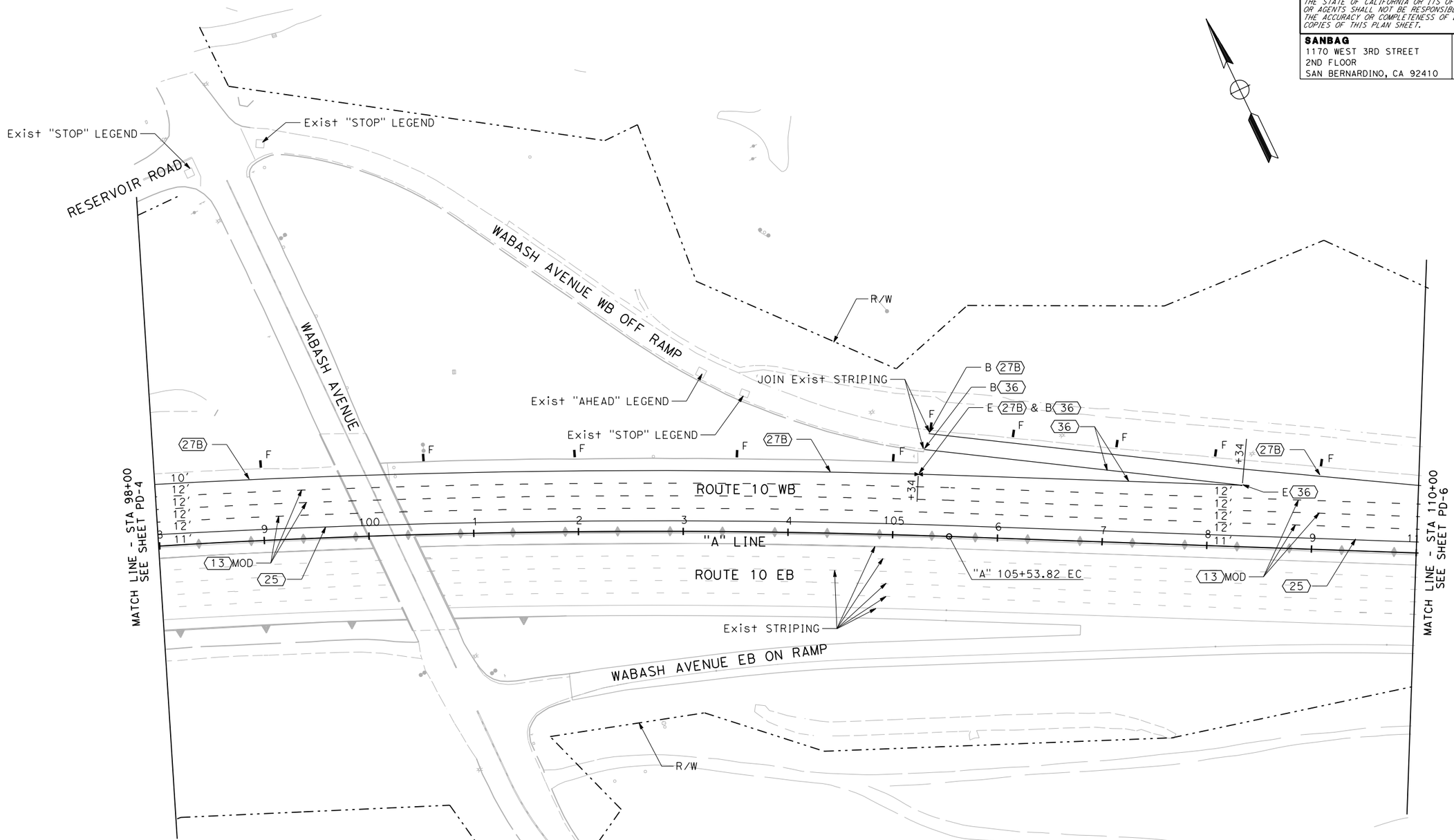

THIS PLAN ACCURATE FOR PAVEMENT DELINEATION ONLY

PAVEMENT DELINEATION PLAN

SCALE 1"=50'

PD-5

REVISED BY	DATE REVISED

CALCULATED-DESIGNED BY

CHECKED BY

CONSULTANT FUNCTIONAL SUPERVISOR: ED KOUZI

STATE OF CALIFORNIA - DEPARTMENT OF TRANSPORTATION

Caltrans

LAST REVISION 00-00-00

DATE PLOTTED => 7/14/2009
TIME PLOTTED => 9:51:23 AM

RELATIVE BORDER SCALE IS IN INCHES 0 1 2 3

USERNAME => SmithJH
DGN FILE => ...\0f150na005.dgn

CU 08220

EA 0F1500

Dist	COUNTY	ROUTE	POST MILES TOTAL PROJECT	SHEET No.	TOTAL SHEETS
8	SBd	10	33.3/R36.9	XXX	XXX

REGISTERED CIVIL ENGINEER DATE

PLANS APPROVAL DATE

REGISTERED PROFESSIONAL ENGINEER No. Exp. CIVIL STATE OF CALIFORNIA

THE STATE OF CALIFORNIA OR ITS OFFICERS OR AGENTS SHALL NOT BE RESPONSIBLE FOR THE ACCURACY OR COMPLETENESS OF ELECTRONIC COPIES OF THIS PLAN SHEET.

SANBAG
1170 WEST 3RD STREET
2ND FLOOR
SAN BERNARDINO, CA 92410

AECOM
999 W. TOWN & COUNTRY RD
ORANGE, CA 92868

NOTES:

1. SEE PD-1 FOR LEGEND.

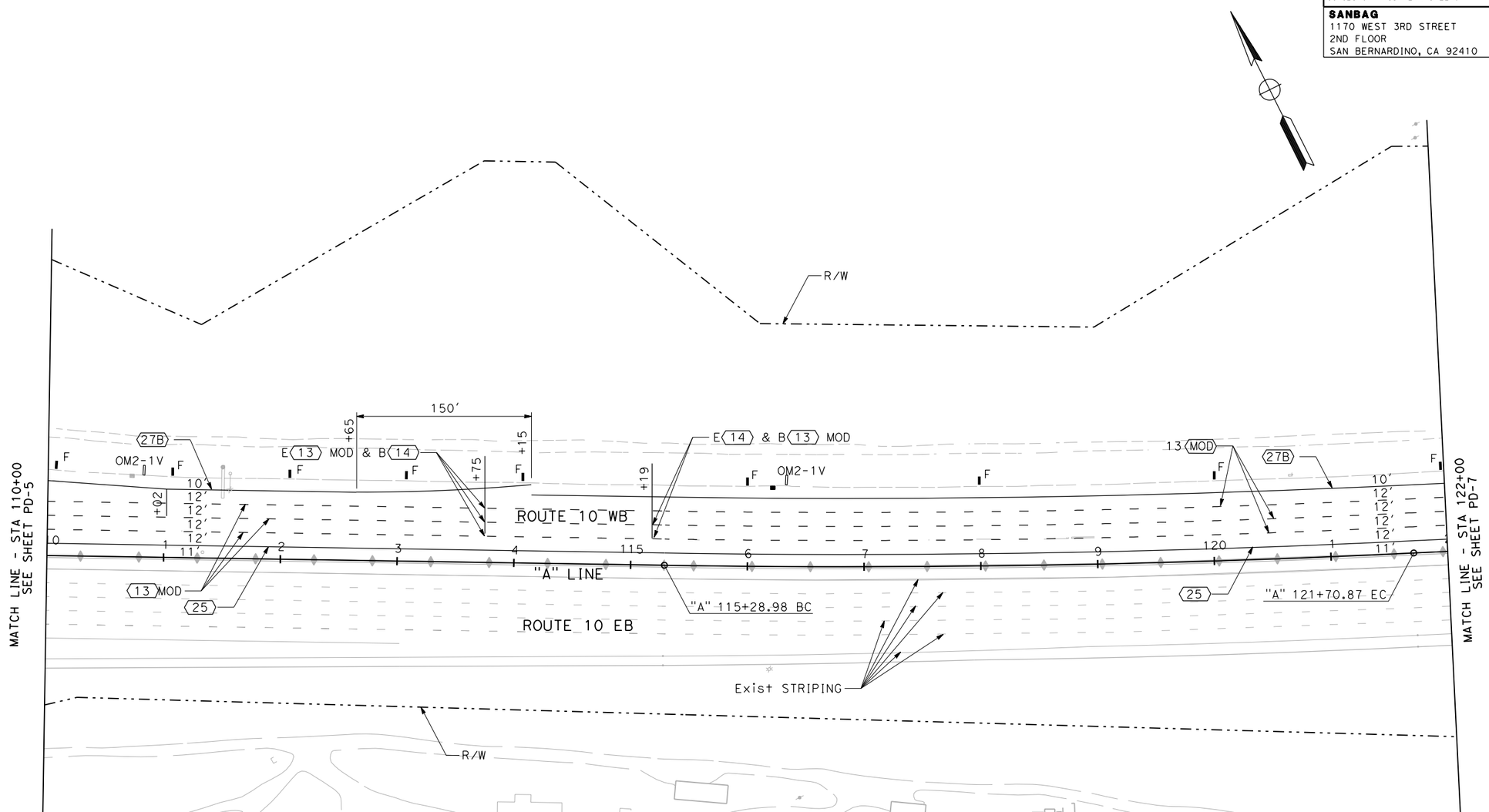

THIS PLAN ACCURATE FOR PAVEMENT DELINEATION ONLY

PAVEMENT DELINEATION PLAN

SCALE 1"=50'

PD-6

REVISED BY	DATE REVISED

CALCULATED-DESIGNED BY

CHECKED BY

CONSULTANT FUNCTIONAL SUPERVISOR: ED KOUZI

STATE OF CALIFORNIA - DEPARTMENT OF TRANSPORTATION

Caltrans

LAST REVISION 00-00-00 | DATE PLOTTED => 7/14/2009 | TIME PLOTTED => 9:51:24 AM

RELATIVE BORDER SCALE IS IN INCHES 0 1 2 3

USERNAME => SmithJH
DGN FILE => ...\0f150na006.dgn

CU 08220

EA 0F1500

Dist	COUNTY	ROUTE	POST MILES TOTAL PROJECT	SHEET No.	TOTAL SHEETS
8	SBd	10	33.3/R36.9	XXX	XXX

REGISTERED CIVIL ENGINEER DATE

PLANS APPROVAL DATE

REGISTERED PROFESSIONAL ENGINEER No. Exp. CIVIL STATE OF CALIFORNIA

THE STATE OF CALIFORNIA OR ITS OFFICERS OR AGENTS SHALL NOT BE RESPONSIBLE FOR THE ACCURACY OR COMPLETENESS OF ELECTRONIC COPIES OF THIS PLAN SHEET.

SANBAG
1170 WEST 3RD STREET
2ND FLOOR
SAN BERNARDINO, CA 92410

AECOM
999 W. TOWN & COUNTRY RD
ORANGE, CA 92868

NOTES:

1. SEE PD-1 FOR LEGEND.

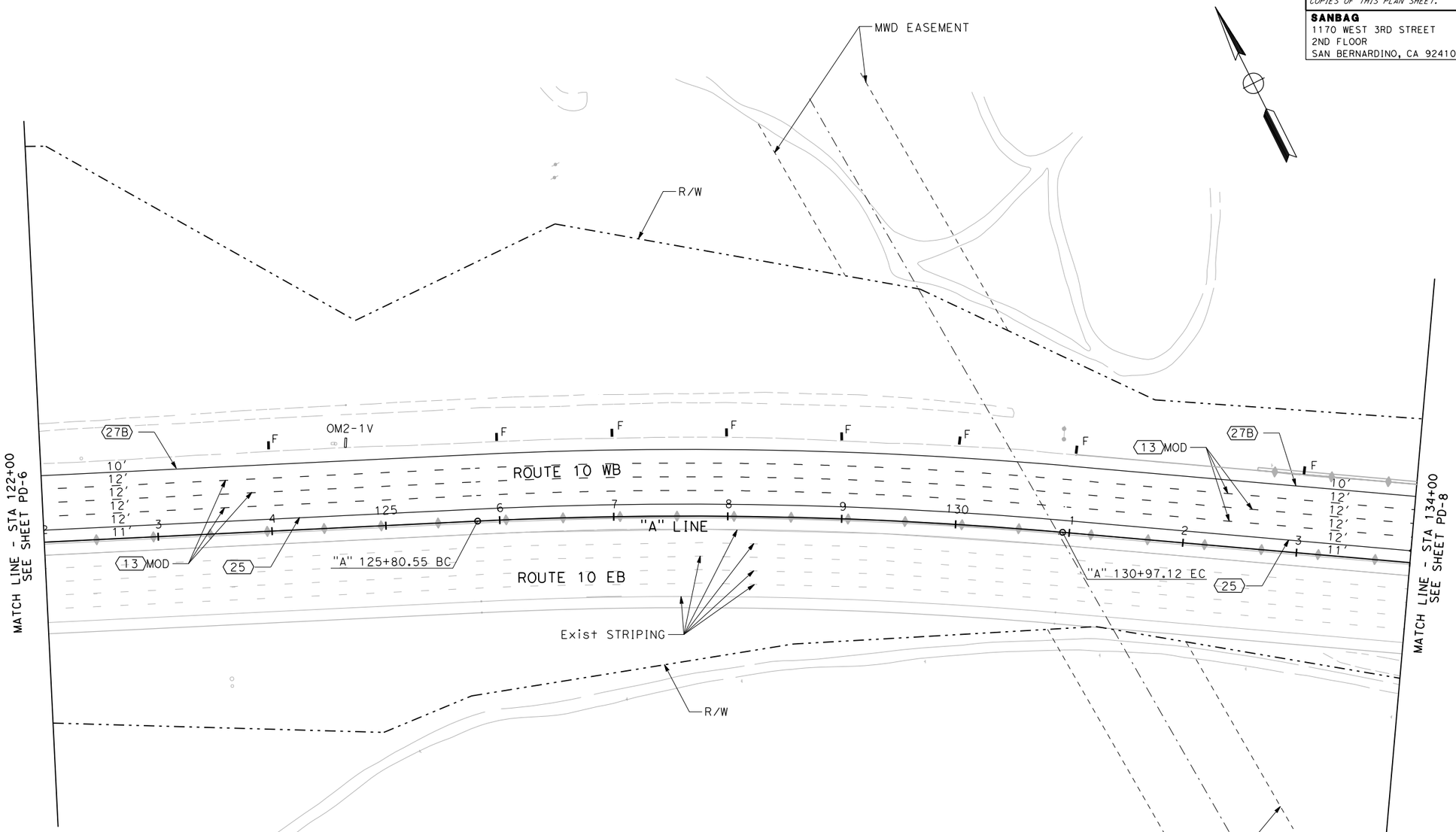

THIS PLAN IS ACCURATE FOR PAVEMENT DELINEATION ONLY

PAVEMENT DELINEATION PLAN

SCALE 1"=50'

PD-7

REVISED BY	DATE REVISED

CALCULATED-DESIGNED BY

CHECKED BY

CONSULTANT FUNCTIONAL SUPERVISOR

ED KOUZI

STATE OF CALIFORNIA - DEPARTMENT OF TRANSPORTATION

Caltrans

LAST REVISION 00-00-00

DATE PLOTTED => 7/14/2009
TIME PLOTTED => 9:51:25 AM

RELATIVE BORDER SCALE IS IN INCHES 0 1 2 3

USERNAME => SmithJH
DGN FILE => ...\0f150na007.dgn

CU 08220

EA 0F1500

Dist	COUNTY	ROUTE	POST MILES TOTAL PROJECT	SHEET No.	TOTAL SHEETS
8	SBd	10	33.3/R36.9	XXX	XXX

REGISTERED CIVIL ENGINEER DATE

PLANS APPROVAL DATE

REGISTERED PROFESSIONAL ENGINEER No. Exp. CIVIL STATE OF CALIFORNIA

THE STATE OF CALIFORNIA OR ITS OFFICERS OR AGENTS SHALL NOT BE RESPONSIBLE FOR THE ACCURACY OR COMPLETENESS OF ELECTRONIC COPIES OF THIS PLAN SHEET.

SANBAG
1170 WEST 3RD STREET
2ND FLOOR
SAN BERNARDINO, CA 92410

AECOM
999 W. TOWN & COUNTRY RD
ORANGE, CA 92868

NOTES:

1. SEE PD-1 FOR LEGEND.

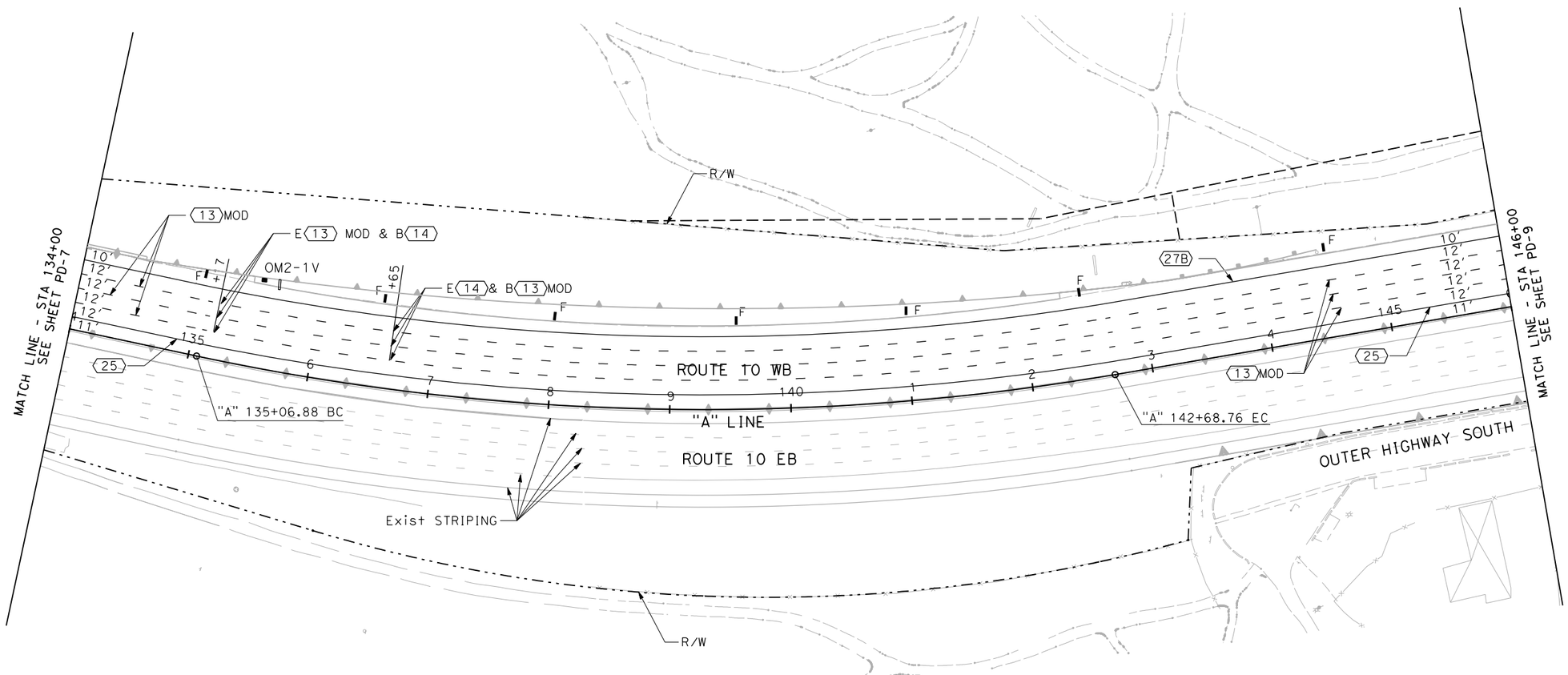

THIS PLAN IS ACCURATE FOR PAVEMENT DELINEATION ONLY

PAVEMENT DELINEATION PLAN

SCALE 1"=50'

PD-8

STATE OF CALIFORNIA - DEPARTMENT OF TRANSPORTATION

Caltrans

CONSULTANT FUNCTIONAL SUPERVISOR: ED KOUZI

CALCULATED-DESIGNED BY

CHECKED BY

REVISED BY

DATE REVISED

LAST REVISION 00-00-00

DATE PLOTTED => 7/14/2009
TIME PLOTTED => 9:51:27 AM

RELATIVE BORDER SCALE IS IN INCHES 0 1 2 3

USERNAME => SmithJH
DGN FILE => ...\0f150na008.dgn

CU 08220

EA 0F1500

Dist	COUNTY	ROUTE	POST MILES TOTAL PROJECT	SHEET No.	TOTAL SHEETS
8	SBd	10	33.3/R36.9	XXX	XXX

REGISTERED CIVIL ENGINEER DATE

PLANS APPROVAL DATE

REGISTERED PROFESSIONAL ENGINEER No. Exp. CIVIL STATE OF CALIFORNIA

THE STATE OF CALIFORNIA OR ITS OFFICERS OR AGENTS SHALL NOT BE RESPONSIBLE FOR THE ACCURACY OR COMPLETENESS OF ELECTRONIC COPIES OF THIS PLAN SHEET.

SANBAG
1170 WEST 3RD STREET
2ND FLOOR
SAN BERNARDINO, CA 92410

AECOM
999 W. TOWN & COUNTRY RD
ORANGE, CA 92868

NOTES:

1. SEE PD-1 FOR LEGEND.

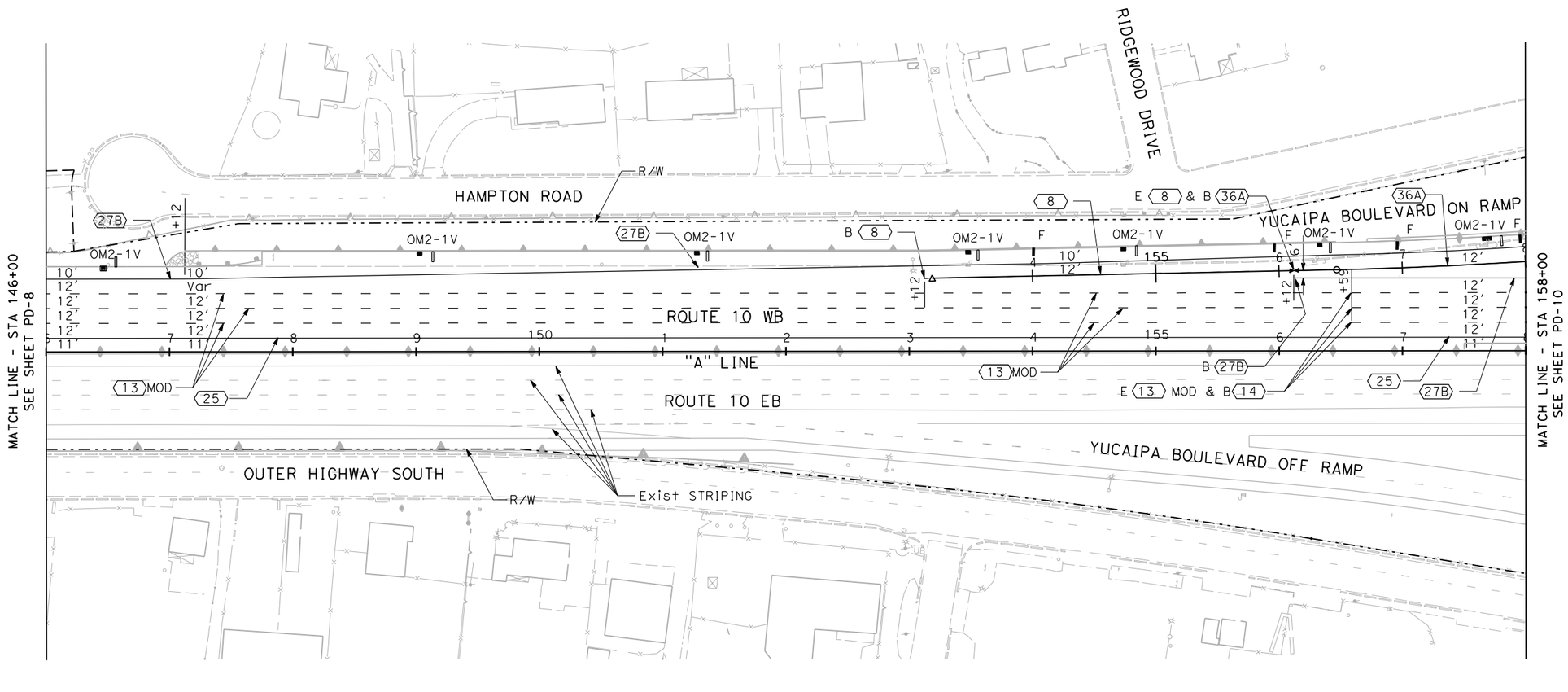

THIS PLAN IS ACCURATE FOR PAVEMENT DELINEATION ONLY

PAVEMENT DELINEATION PLAN

SCALE 1"=50'

PD-9

STATE OF CALIFORNIA - DEPARTMENT OF TRANSPORTATION

Caltrans

CONSULTANT FUNCTIONAL SUPERVISOR: ED KOUZI

CALCULATED-DESIGNED BY

CHECKED BY

REVISED BY

DATE REVISED

LAST REVISION 00-00-00

DATE PLOTTED => 7/14/2009
TIME PLOTTED => 9:51:28 AM

RELATIVE BORDER SCALE IS IN INCHES 0 1 2 3

USERNAME => SmithJH
DGN FILE => ...\0f150na009.dgn

CU 08220

EA 0F1500

Dist	COUNTY	ROUTE	POST MILES TOTAL PROJECT	SHEET No.	TOTAL SHEETS
8	SBd	10	33.3/R36.9	XXX	XXX

REGISTERED CIVIL ENGINEER DATE

PLANS APPROVAL DATE

REGISTERED PROFESSIONAL ENGINEER No. Exp. CIVIL STATE OF CALIFORNIA

THE STATE OF CALIFORNIA OR ITS OFFICERS OR AGENTS SHALL NOT BE RESPONSIBLE FOR THE ACCURACY OR COMPLETENESS OF ELECTRONIC COPIES OF THIS PLAN SHEET.

SANBAG
1170 WEST 3RD STREET
2ND FLOOR
SAN BERNARDINO, CA 92410

AECOM
999 W. TOWN & COUNTRY RD
ORANGE, CA 92868

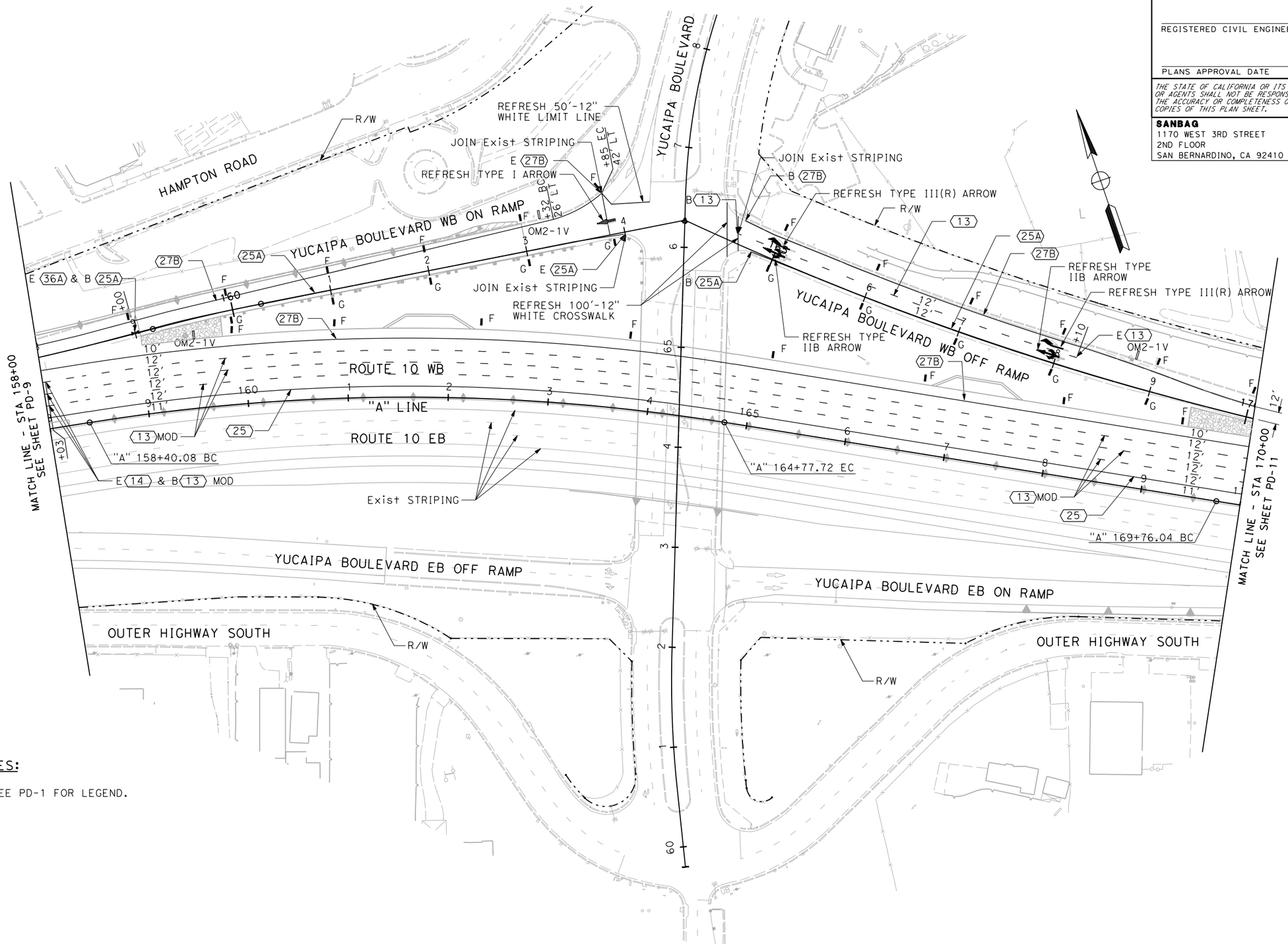

NOTES:

1. SEE PD-1 FOR LEGEND.

THIS PLAN IS ACCURATE FOR PAVEMENT DELINEATION ONLY

PAVEMENT DELINEATION PLAN

SCALE 1"=50'

PD-10

REVISED BY	DATE REVISED

CALCULATED-DESIGNED BY

CHECKED BY

CONSULTANT FUNCTIONAL SUPERVISOR: ED KOUZI

STATE OF CALIFORNIA - DEPARTMENT OF TRANSPORTATION

Caltrans

LAST REVISION 00-00-00

DATE PLOTTED => 7/14/2009
TIME PLOTTED => 9:51:29 AM

RELATIVE BORDER SCALE IS IN INCHES 0 1 2 3

USERNAME => SmithJH
DGN FILE => ...\0f150na010.dgn

CU 08220

EA 0F1500

Dist	COUNTY	ROUTE	POST MILES TOTAL PROJECT	SHEET No.	TOTAL SHEETS
8	SBd	10	33.3/R36.9	XXX	XXX

REGISTERED CIVIL ENGINEER DATE

PLANS APPROVAL DATE

REGISTERED PROFESSIONAL ENGINEER No. Exp. CIVIL STATE OF CALIFORNIA

THE STATE OF CALIFORNIA OR ITS OFFICERS OR AGENTS SHALL NOT BE RESPONSIBLE FOR THE ACCURACY OR COMPLETENESS OF ELECTRONIC COPIES OF THIS PLAN SHEET.

SANBAG
1170 WEST 3RD STREET
2ND FLOOR
SAN BERNARDINO, CA 92410

AECOM
999 W. TOWN & COUNTRY RD
ORANGE, CA 92868

NOTES:

1. SEE PD-1 FOR LEGEND.

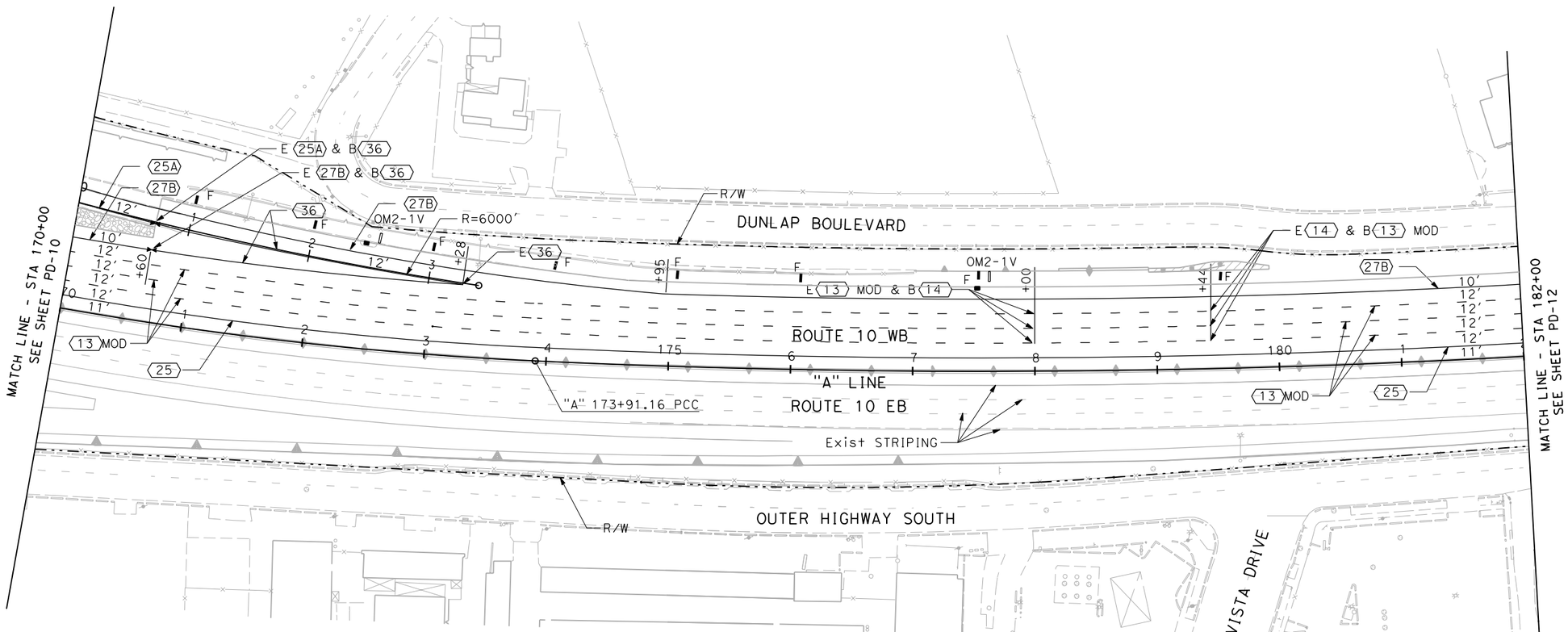

THIS PLAN IS ACCURATE FOR PAVEMENT DELINEATION ONLY

PAVEMENT DELINEATION PLAN

SCALE 1"=50'

PD-11

STATE OF CALIFORNIA - DEPARTMENT OF TRANSPORTATION

Caltrans

CONSULTANT FUNCTIONAL SUPERVISOR: ED KOUZI

CALCULATED-DESIGNED BY

CHECKED BY

REVISED BY

DATE REVISED

LAST REVISION 00-00-00

DATE PLOTTED => 7/14/2009
TIME PLOTTED => 9:51:32 AM

RELATIVE BORDER SCALE IS IN INCHES 0 1 2 3

USERNAME => SmithJH
DGN FILE => ...\0f150na011.dgn

CU 08220

EA 0F1500

Dist	COUNTY	ROUTE	POST MILES TOTAL PROJECT	SHEET No.	TOTAL SHEETS
8	SBd	10	33.3/R36.9	XXX	XXX

REGISTERED CIVIL ENGINEER DATE

PLANS APPROVAL DATE

REGISTERED PROFESSIONAL ENGINEER No. Exp. CIVIL STATE OF CALIFORNIA

THE STATE OF CALIFORNIA OR ITS OFFICERS OR AGENTS SHALL NOT BE RESPONSIBLE FOR THE ACCURACY OR COMPLETENESS OF ELECTRONIC COPIES OF THIS PLAN SHEET.

SANBAG
1170 WEST 3RD STREET
2ND FLOOR
SAN BERNARDINO, CA 92410

AECOM
999 W. TOWN & COUNTRY RD
ORANGE, CA 92868

NOTES:

1. SEE PD-1 FOR LEGEND.

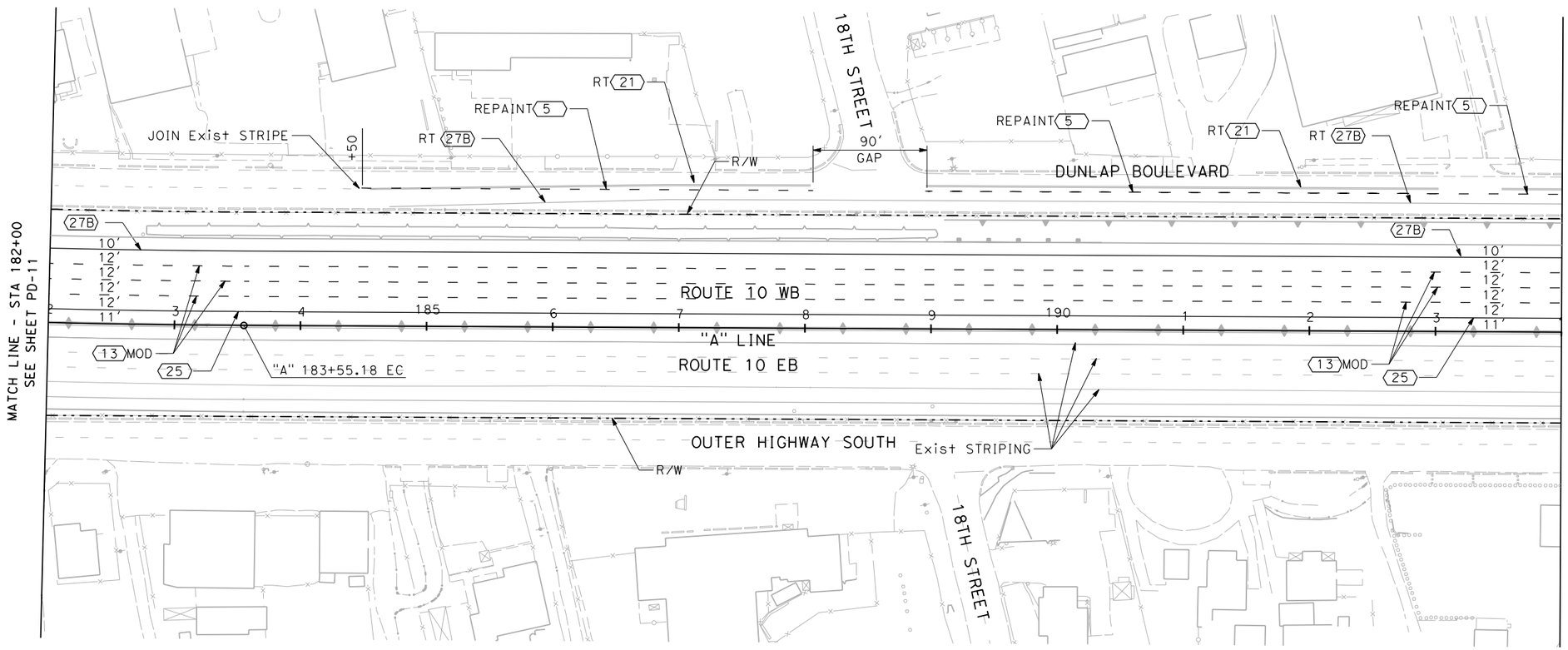

THIS PLAN IS ACCURATE FOR PAVEMENT DELINEATION ONLY

PAVEMENT DELINEATION PLAN

SCALE 1"=50'

PD-12

REVISED BY	DATE REVISED

CALCULATED-DESIGNED BY

CHECKED BY

CONSULTANT FUNCTIONAL SUPERVISOR: ED KOUZI

STATE OF CALIFORNIA - DEPARTMENT OF TRANSPORTATION

Caltrans

LAST REVISION 00-00-00

DATE PLOTTED => 7/14/2009
TIME PLOTTED => 9:51:33 AM

RELATIVE BORDER SCALE IS IN INCHES 0 1 2 3

USERNAME => SmithJH
DGN FILE => ...\0f150na012.dgn

CU 08220

EA 0F1500

Dist	COUNTY	ROUTE	POST MILES TOTAL PROJECT	SHEET No.	TOTAL SHEETS
8	SBd	10	33.3/R36.9	XXX	XXX

REGISTERED CIVIL ENGINEER DATE

PLANS APPROVAL DATE

REGISTERED PROFESSIONAL ENGINEER No. Exp. CIVIL STATE OF CALIFORNIA

THE STATE OF CALIFORNIA OR ITS OFFICERS OR AGENTS SHALL NOT BE RESPONSIBLE FOR THE ACCURACY OR COMPLETENESS OF ELECTRONIC COPIES OF THIS PLAN SHEET.

SANBAG
1170 WEST 3RD STREET
2ND FLOOR
SAN BERNARDINO, CA 92410

AECOM
999 W. TOWN & COUNTRY RD
ORANGE, CA 92868

NOTES:

1. SEE PD-1 FOR LEGEND.

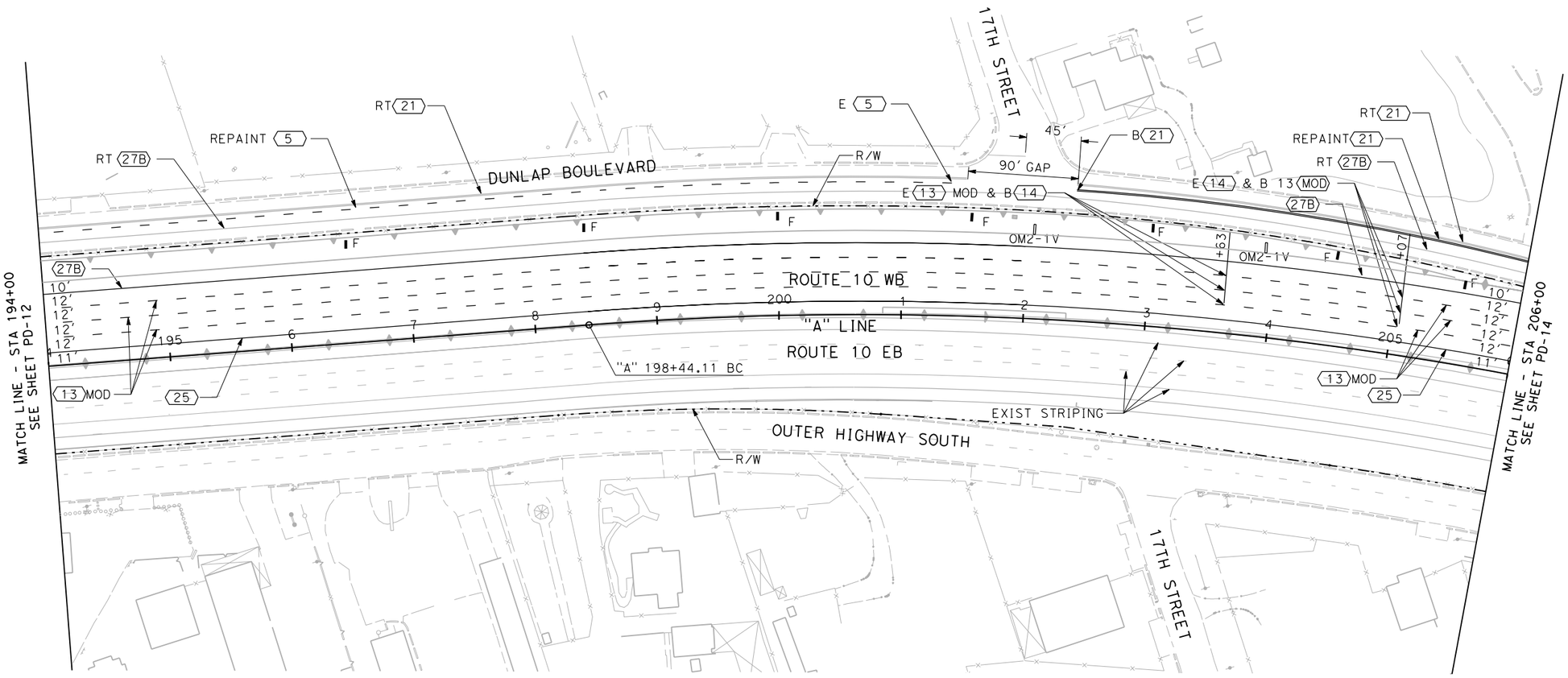

THIS PLAN IS ACCURATE FOR PAVEMENT DELINEATION ONLY

PAVEMENT DELINEATION PLAN

SCALE 1"=50'

PD-13

STATE OF CALIFORNIA - DEPARTMENT OF TRANSPORTATION

Caltrans

CONSULTANT FUNCTIONAL SUPERVISOR: ED KOUZI

CALCULATED-DESIGNED BY

CHECKED BY

REVISED BY

DATE REVISED

LAST REVISION 00-00-00

DATE PLOTTED => 7/14/2009
TIME PLOTTED => 9:51:34 AM

RELATIVE BORDER SCALE IS IN INCHES 0 1 2 3

USERNAME => SmithJH
DGN FILE => ...\0f150na013.dgn

CU 08220

EA 0F1500

Dist	COUNTY	ROUTE	POST MILES TOTAL PROJECT	SHEET No.	TOTAL SHEETS
8	SBd	10	33.3/R36.9	XXX	XXX

REGISTERED CIVIL ENGINEER DATE

PLANS APPROVAL DATE

REGISTERED PROFESSIONAL ENGINEER No. Exp. CIVIL STATE OF CALIFORNIA

THE STATE OF CALIFORNIA OR ITS OFFICERS OR AGENTS SHALL NOT BE RESPONSIBLE FOR THE ACCURACY OR COMPLETENESS OF ELECTRONIC COPIES OF THIS PLAN SHEET.

SANBAG
1170 WEST 3RD STREET
2ND FLOOR
SAN BERNARDINO, CA 92410

AECOM
999 W. TOWN & COUNTRY RD
ORANGE, CA 92868

NOTES:

1. SEE PD-1 FOR LEGEND.

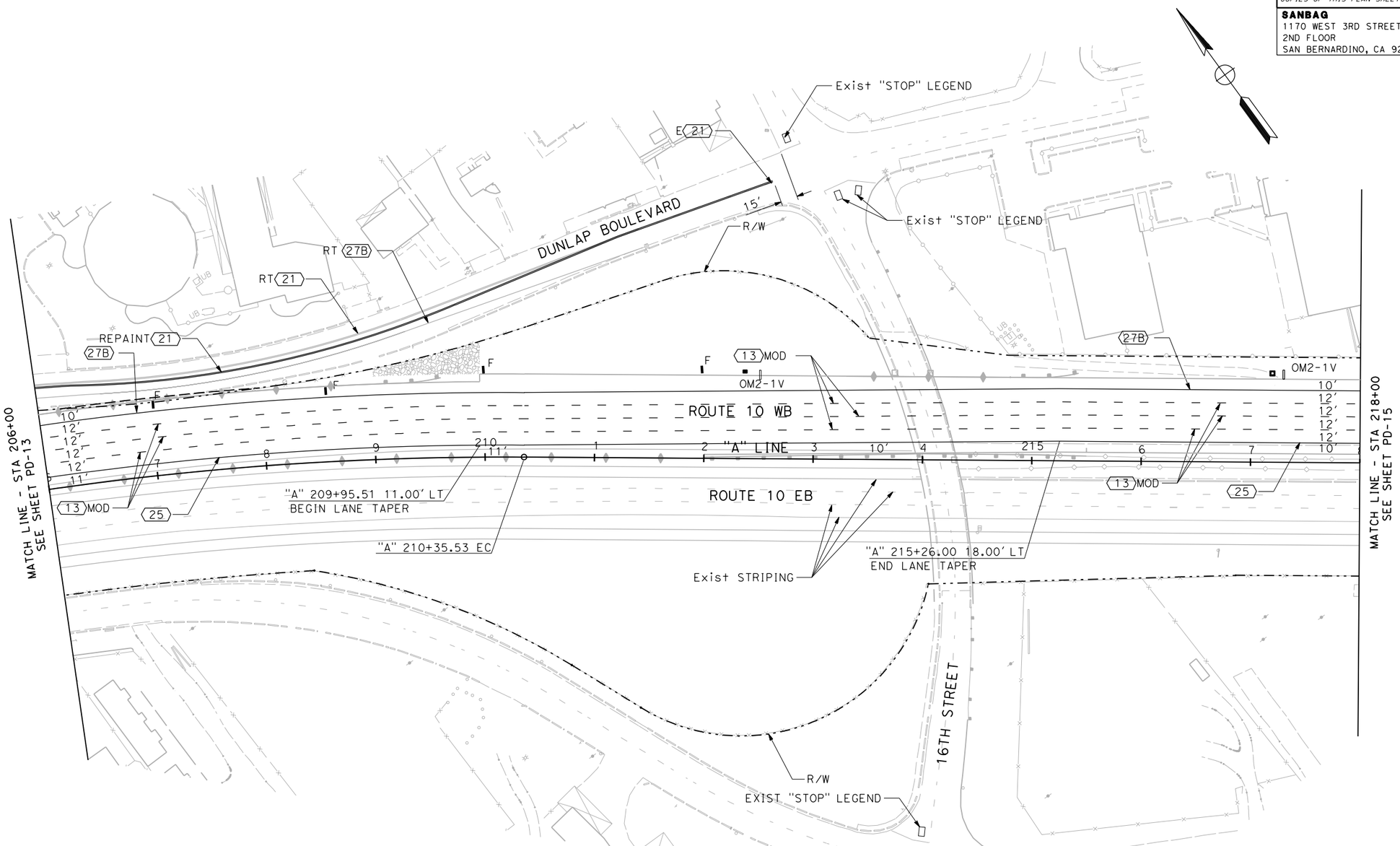

THIS PLAN IS ACCURATE FOR PAVEMENT DELINEATION ONLY

PAVEMENT DELINEATION PLAN

SCALE 1"=50'

PD-14

REVISED BY	DATE REVISED

CALCULATED-DESIGNED BY

CHECKED BY

CONSULTANT FUNCTIONAL SUPERVISOR

ED KOUZI

STATE OF CALIFORNIA - DEPARTMENT OF TRANSPORTATION

Caltrans

LAST REVISION 00-00-00

DATE PLOTTED => 7/14/2009
TIME PLOTTED => 9:51:36 AM

RELATIVE BORDER SCALE IS IN INCHES 0 1 2 3

USERNAME => SmithJH
DGN FILE => ...\0f150na014.dgn

CU 08220

EA 0F1500

Dist	COUNTY	ROUTE	POST MILES TOTAL PROJECT	SHEET No.	TOTAL SHEETS
8	SBd	10	33.3/R36.9	XXX	XXX

REGISTERED CIVIL ENGINEER DATE

PLANS APPROVAL DATE

REGISTERED PROFESSIONAL ENGINEER No. Exp. CIVIL STATE OF CALIFORNIA

THE STATE OF CALIFORNIA OR ITS OFFICERS OR AGENTS SHALL NOT BE RESPONSIBLE FOR THE ACCURACY OR COMPLETENESS OF ELECTRONIC COPIES OF THIS PLAN SHEET.

SANBAG
1170 WEST 3RD STREET
2ND FLOOR
SAN BERNARDINO, CA 92410

AECOM
999 W. TOWN & COUNTRY RD
ORANGE, CA 92868

NOTES:

1. SEE PD-1 FOR LEGEND.

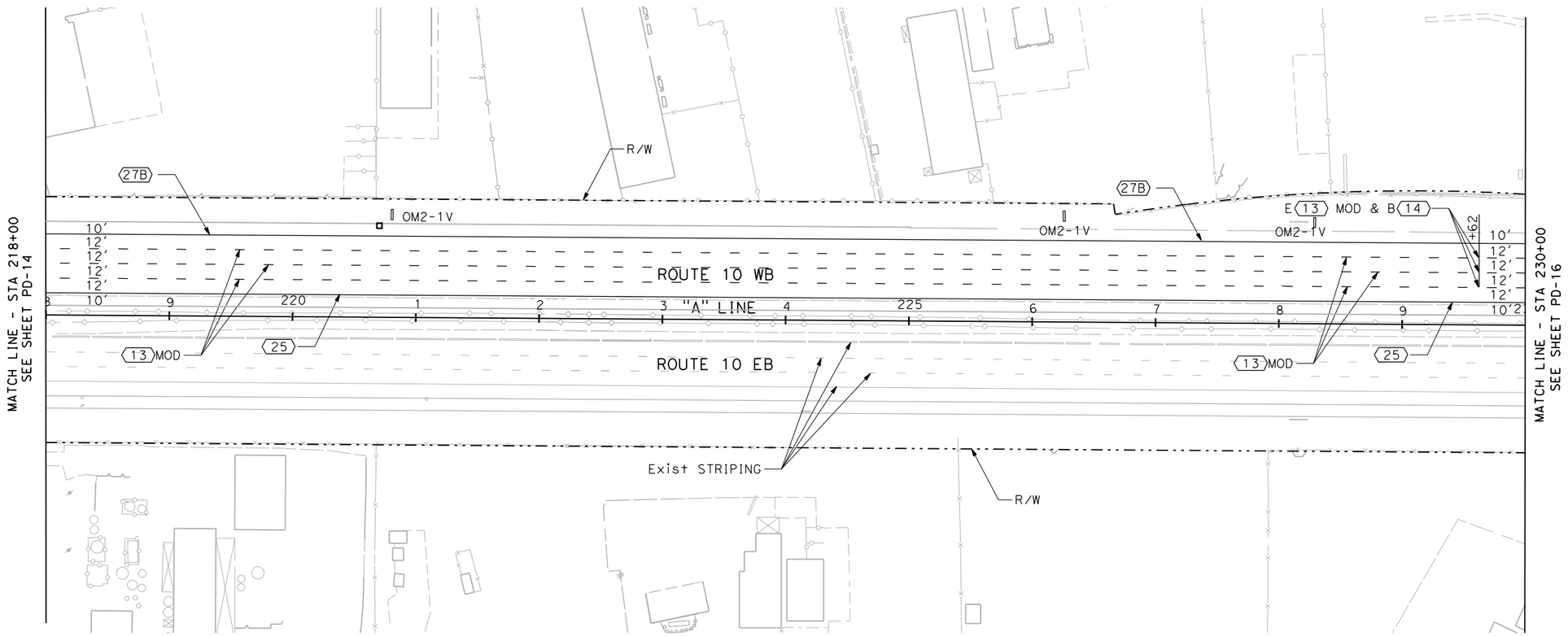

THIS PLAN IS ACCURATE FOR PAVEMENT DELINEATION ONLY

PAVEMENT DELINEATION PLAN

SCALE 1"=50'

PD-15

STATE OF CALIFORNIA - DEPARTMENT OF TRANSPORTATION

Caltrans

CONSULTANT FUNCTIONAL SUPERVISOR: ED KOUZI

CALCULATED-DESIGNED BY

CHECKED BY

REVISED BY

DATE REVISED

LAST REVISION 00-00-00

DATE PLOTTED => 7/14/2009
TIME PLOTTED => 9:51:37 AM

RELATIVE BORDER SCALE IS IN INCHES 0 1 2 3

USERNAME => SmithJH
DGN FILE => ...\0f150na015.dgn

CU 08220

EA 0F1500

Dist	COUNTY	ROUTE	POST MILES TOTAL PROJECT	SHEET No.	TOTAL SHEETS
8	SBd	10	33.3/R36.9	XXX	XXX

REGISTERED CIVIL ENGINEER DATE

PLANS APPROVAL DATE

REGISTERED PROFESSIONAL ENGINEER No. Exp. CIVIL STATE OF CALIFORNIA

THE STATE OF CALIFORNIA OR ITS OFFICERS OR AGENTS SHALL NOT BE RESPONSIBLE FOR THE ACCURACY OR COMPLETENESS OF ELECTRONIC COPIES OF THIS PLAN SHEET.

SANBAG
1170 WEST 3RD STREET
2ND FLOOR
SAN BERNARDINO, CA 92410

AECOM
999 W. TOWN & COUNTRY RD
ORANGE, CA 92868

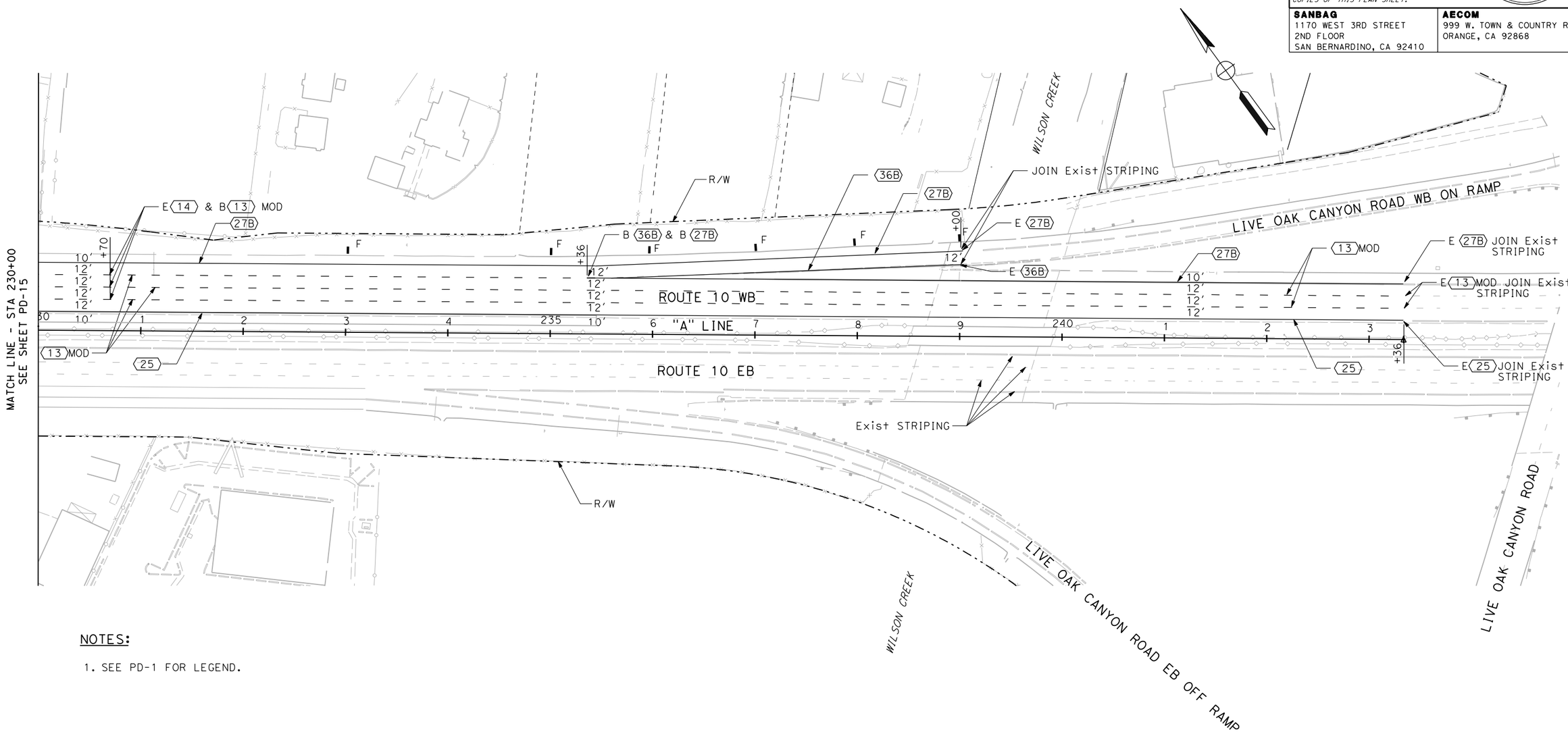

NOTES:

1. SEE PD-1 FOR LEGEND.

THIS PLAN IS ACCURATE FOR PAVEMENT DELINEATION ONLY

PAVEMENT DELINEATION PLAN

SCALE 1"=50'

PD-16

REVISED BY	DATE REVISED

CALCULATED-DESIGNED BY

CHECKED BY

CONSULTANT FUNCTIONAL SUPERVISOR: ED KOUZI

STATE OF CALIFORNIA - DEPARTMENT OF TRANSPORTATION

Caltrans

LAST REVISION 00-00-00

DATE PLOTTED => 7/14/2009
TIME PLOTTED => 9:51:38 AM

RELATIVE BORDER SCALE IS IN INCHES 0 1 2 3

USERNAME => SmithJH
DGN FILE => ...\0f150na016.dgn

CU 08220

EA 0F1500

Dist	COUNTY	ROUTE	POST MILES TOTAL PROJECT	SHEET No.	TOTAL SHEETS
8	SBd	10	33.3/R36.9	XXX	XXX

REGISTERED CIVIL ENGINEER DATE

PLANS APPROVAL DATE

REGISTERED PROFESSIONAL ENGINEER No. Exp. CIVIL STATE OF CALIFORNIA

THE STATE OF CALIFORNIA OR ITS OFFICERS OR AGENTS SHALL NOT BE RESPONSIBLE FOR THE ACCURACY OR COMPLETENESS OF ELECTRONIC COPIES OF THIS PLAN SHEET.

SANBAG
1170 WEST 3RD STREET
2ND FLOOR
SAN BERNARDINO, CA 92410

AECOM
999 W. TOWN & COUNTRY RD
ORANGE, CA 92868

PAVEMENT DELINEATION QUANTITIES

LOCATION	DETAIL NO. OR PAVEMENT MARKING TYPE	PAVEMENT MARKERS				THERMOPLASTIC TRAFFIC STRIPE (SPRAYABLE)						THERMOPLASTIC PAVEMENT MARKING
		NON-REFL.	REFLECTIVE									
		TYPE A	TYPE C	TYPE G	TYPE H	4" WHITE	4" YELLOW	8" WHITE	4" YELLOW 17'-7'	4" WHITE 17'-7'	4" WHITE 36'-12'	
		EA	EA	EA	EA	LF	LF	LF	LF	LF	LF	SF
WB I-10 50+00 TO 243+36	5	-	-	-	-	-	-	-	1,700	-	-	-
	8	-	-	-	-	-	-	-	-	300	-	-
	13 MOD AND 14	4,768	96	1,096	-	-	-	-	-	-	57,208	-
	21	-	-	-	-	-	3,640	-	-	-	-	-
	27B	-	-	-	-	20,000	-	-	-	-	-	-
	25A	-	-	-	50	-	1,100	-	-	-	-	-
	25	-	-	-	404	-	19,336	-	-	-	-	-
	36A	-	13	-	-	-	-	288	-	-	-	-
	36B	-	16	-	-	-	-	364	-	-	-	-
	36	-	-	80	-	-	-	1,760	-	-	-	-
	TYPE I ARROW	-	-	-	-	-	-	-	-	-	-	31
	TYPE IIB ARROW	-	-	-	-	-	-	-	-	-	-	118
	TYPE III R ARROW	-	-	-	-	-	-	-	-	-	-	84
	12" WHITE	-	-	-	-	-	-	-	-	-	-	150
	SUBTOTAL	4,768	125	1,176	454	20,000	24,220	2,412	1,700	300	57,208	383
SUBTOTAL FOR STRIPING						44,220		2,412	1,700	300	57,208	383
TOTAL		4,768	1,755			105,840						

DELINEATOR AND MARKER QUANTITIES

SHEET	CLASS 1		OM2-1V
	TYPE F	TYPE G	
PD-1	9	-	-
PD-2	8	-	1
PD-3	-	-	1
PD-4	6	-	-
PD-5	10	-	-
PD-6	9	-	2
PD-7	8	-	1
PD-8	7	-	1
PD-9	3	-	7
PD-10	14	5	3
PD-11	8	-	2
PD-12	-	-	-
PD-13	7	-	2
PD-14	4	-	2
PD-15	-	-	2
PD-16	6	-	-
TOTAL	99	5	24

THIS PLAN IS ACCURATE FOR PAVEMENT DELINEATION ONLY

PAVEMENT DELINEATION QUANTITIES
PDQ-1

REVISED BY | DATE REVISED

CALCULATED-DESIGNED BY | CHECKED BY

CONSULTANT FUNCTIONAL SUPERVISOR: ED KOUZI

STATE OF CALIFORNIA - DEPARTMENT OF TRANSPORTATION

Caltrans

LAST REVISION 00-00-00 | DATE PLOTTED => 7/14/2009 | TIME PLOTTED => 9:51:40 AM

RELATIVE BORDER SCALE IS IN INCHES 0 1 2 3

USERNAME => SmithJH
DGN FILE => ...\0f150nc001.dgn

CU 08220 | EA 0F1500

Dist	COUNTY	ROUTE	POST MILES TOTAL PROJECT	SHEET No.	TOTAL SHEETS
8	SBd	10	33.3/R36.9	XXX	XXX

REGISTERED CIVIL ENGINEER DATE

PLANS APPROVAL DATE

REGISTERED PROFESSIONAL ENGINEER No. Exp. CIVIL STATE OF CALIFORNIA

THE STATE OF CALIFORNIA OR ITS OFFICERS OR AGENTS SHALL NOT BE RESPONSIBLE FOR THE ACCURACY OR COMPLETENESS OF ELECTRONIC COPIES OF THIS PLAN SHEET.

SANBAG
1170 WEST 3RD STREET
2ND FLOOR
SAN BERNARDINO, CA 92410

AECOM
999 W. TOWN & COUNTRY RD
ORANGE, CA 92868

LEGEND:

- ▲ EXISTING SIGN TO REMAIN
- ● REMOVE ROADSIDE OR OVERHEAD SIGN
- ■ RELOCATE ROADSIDE SIGN
- ROADSIDE SIGN SINGLE POST
- ROADSIDE SIGN TWO POST
- ROADSIDE SIGN (STRAP AND SADDLE BRACKET METHOD)
- STREET NAME SIGN (SNS)
- OVERHEAD SIGN
- (1-1) ROADSIDE SIGN (WITH NUMBER)
- (A) OVERHEAD SIGN (WITH LETTER)
- (S) SIGNALIZED INTERSECTION

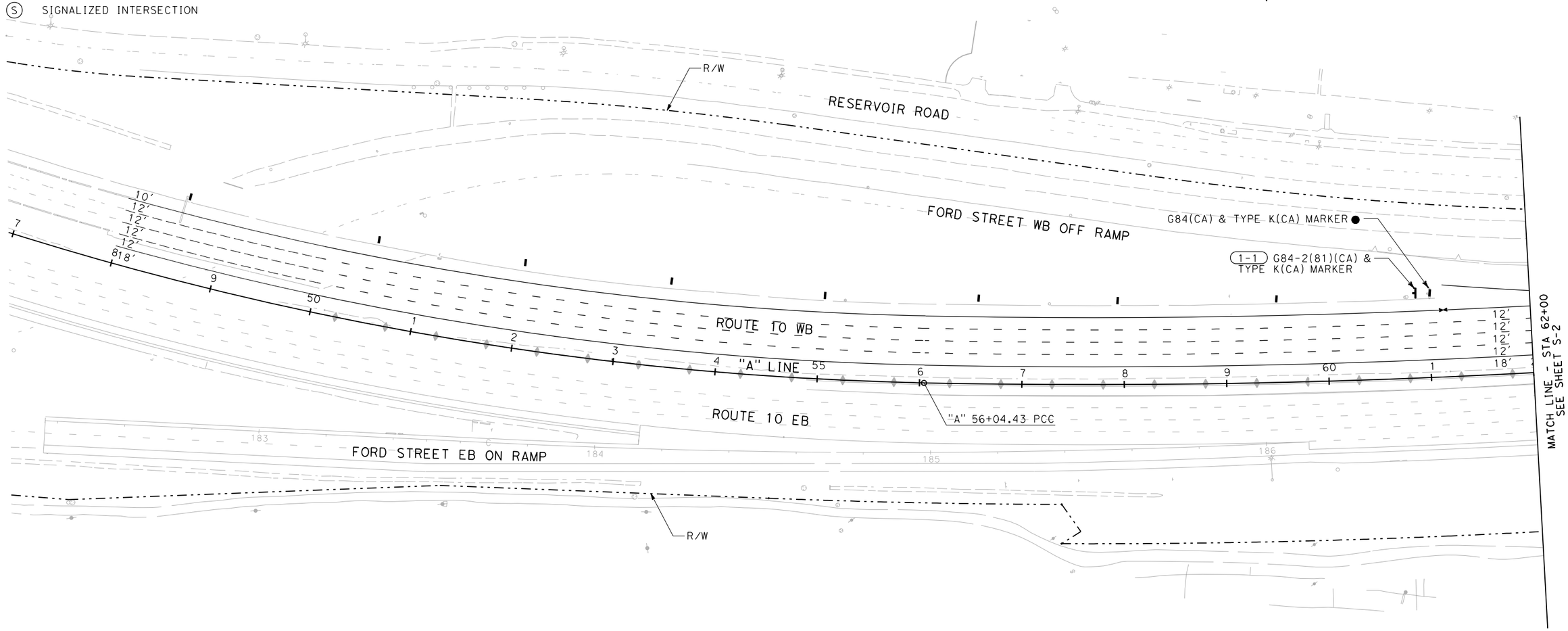

THIS PLAN ACCURATE FOR SIGNING ONLY

SIGN PLAN

SCALE 1"=50'

S-1

STATE OF CALIFORNIA - DEPARTMENT OF TRANSPORTATION

Caltrans

CONSULTANT FUNCTIONAL SUPERVISOR: ED KOUZI

CALCULATED-DESIGNED BY

CHECKED BY

REVISED BY

DATE REVISED

LAST REVISION 00-00-00

DATE PLOTTED => 7/14/2009
TIME PLOTTED => 9:52:04 AM

RELATIVE BORDER SCALE IS IN INCHES 0 1 2 3

USERNAME => SmithJH
DGN FILE => ...\0f150oa001.dgn

CU 08220

EA 0F1500

Dist	COUNTY	ROUTE	POST MILES TOTAL PROJECT	SHEET No.	TOTAL SHEETS
8	SBd	10	33.3/R36.9	XXX	XXX

REGISTERED CIVIL ENGINEER DATE

PLANS APPROVAL DATE

REGISTERED PROFESSIONAL ENGINEER No. Exp. CIVIL STATE OF CALIFORNIA

THE STATE OF CALIFORNIA OR ITS OFFICERS OR AGENTS SHALL NOT BE RESPONSIBLE FOR THE ACCURACY OR COMPLETENESS OF ELECTRONIC COPIES OF THIS PLAN SHEET.

SANBAG
1170 WEST 3RD STREET
2ND FLOOR
SAN BERNARDINO, CA 92410

AECOM
999 W. TOWN & COUNTRY RD
ORANGE, CA 92868

NOTES:

SEE S-1 FOR LEGEND.

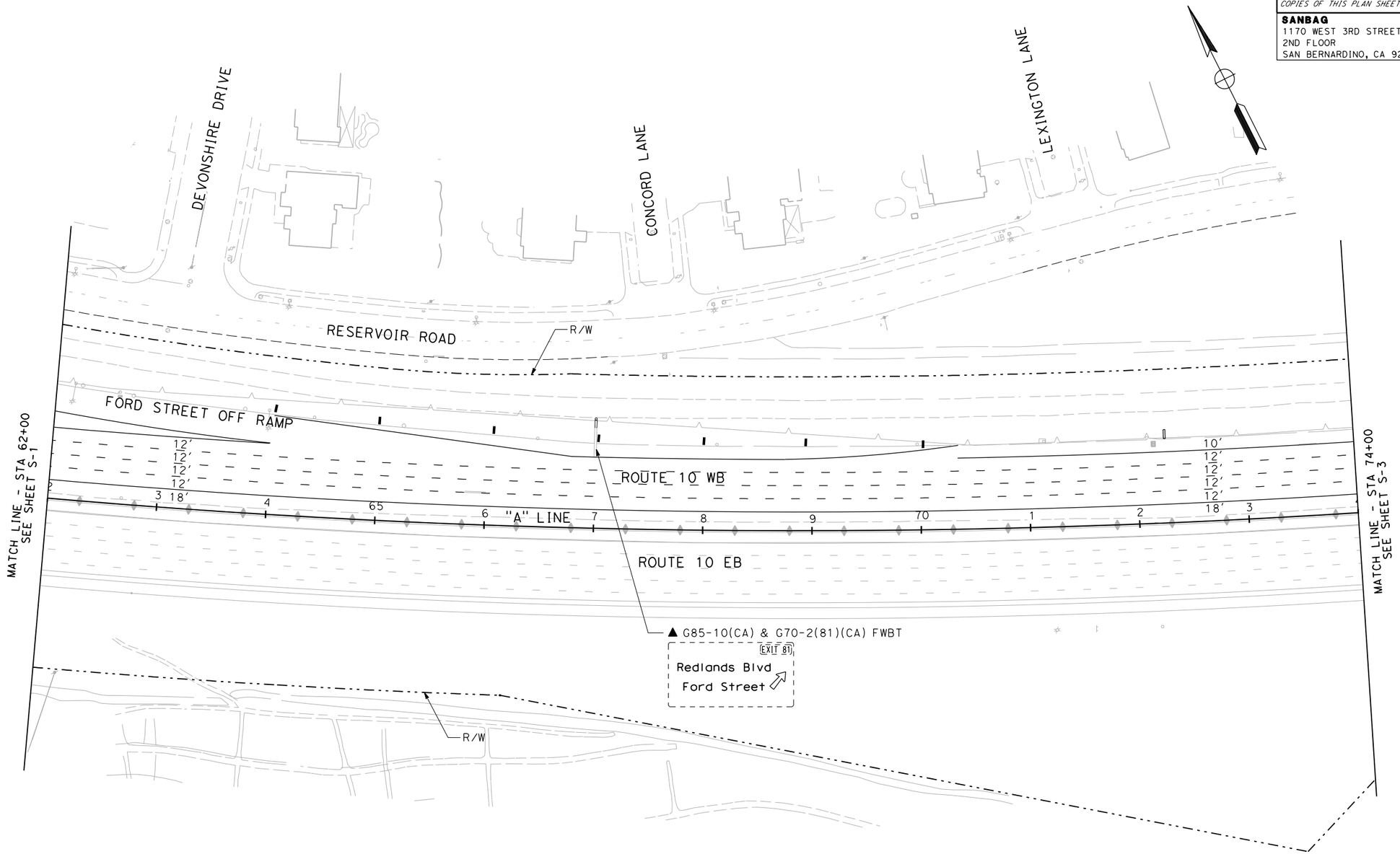

THIS PLAN ACCURATE FOR SIGNING ONLY

SIGN PLAN

SCALE 1"=50'

S-2

REVISED BY	DATE REVISED

CALCULATED-DESIGNED BY

CHECKED BY

CONSULTANT FUNCTIONAL SUPERVISOR: ED KOUZI

STATE OF CALIFORNIA - DEPARTMENT OF TRANSPORTATION

Caltrans

LAST REVISION 00-00-00 | DATE PLOTTED => 7/14/2009 | TIME PLOTTED => 9:52:06 AM

RELATIVE BORDER SCALE IS IN INCHES 0 1 2 3

USERNAME => SmithJH
DGN FILE => ...\0f150oa002.dgn

CU 08220

EA 0F1500

Dist	COUNTY	ROUTE	POST MILES TOTAL PROJECT	SHEET No.	TOTAL SHEETS
8	SBd	10	33.3/R36.9	XXX	XXX

REGISTERED CIVIL ENGINEER DATE

PLANS APPROVAL DATE

REGISTERED PROFESSIONAL ENGINEER No. Exp. CIVIL STATE OF CALIFORNIA

THE STATE OF CALIFORNIA OR ITS OFFICERS OR AGENTS SHALL NOT BE RESPONSIBLE FOR THE ACCURACY OR COMPLETENESS OF ELECTRONIC COPIES OF THIS PLAN SHEET.

SANBAG
1170 WEST 3RD STREET
2ND FLOOR
SAN BERNARDINO, CA 92410

AECOM
999 W. TOWN & COUNTRY RD
ORANGE, CA 92868

NOTES:

SEE S-1 FOR LEGEND.

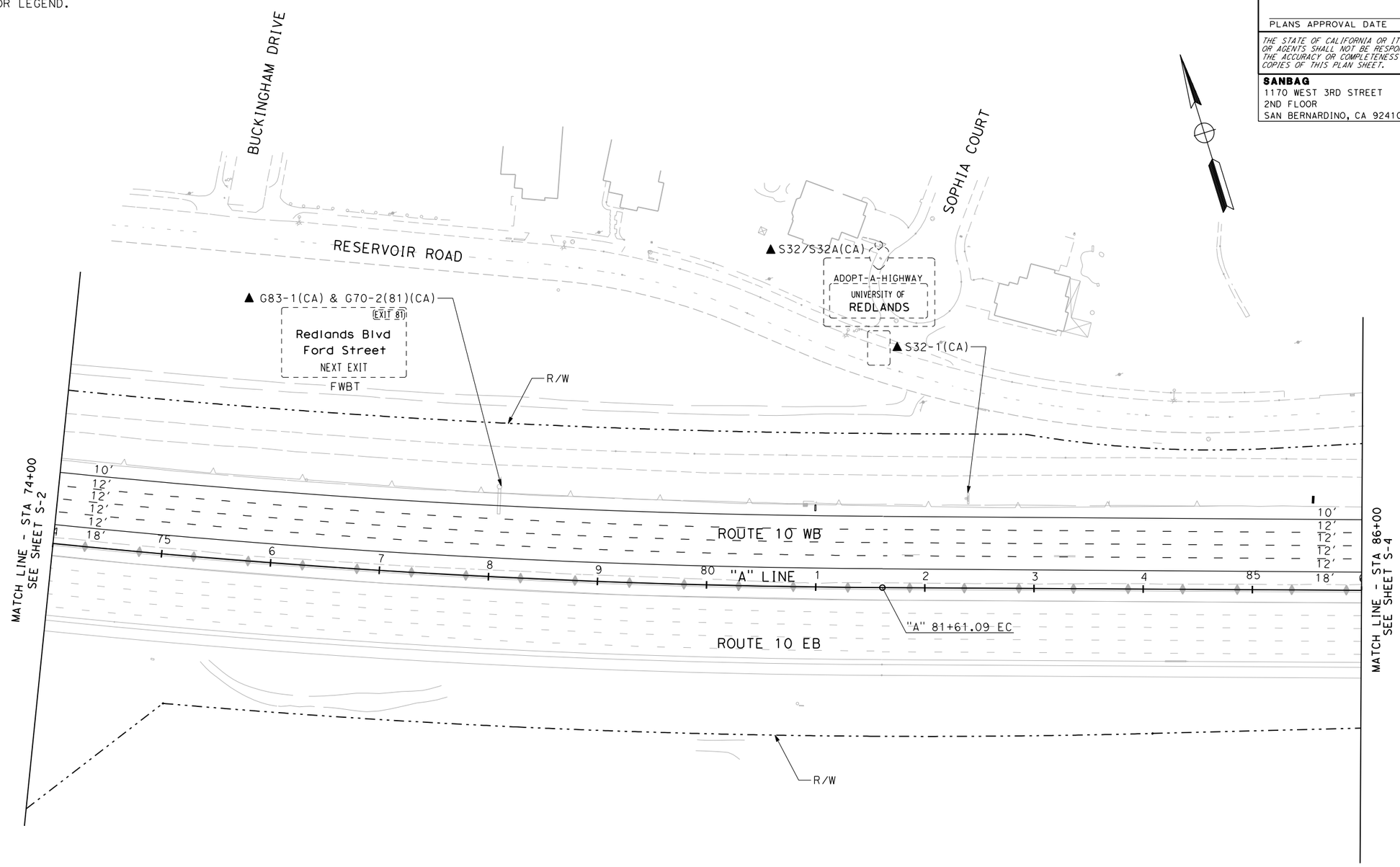

THIS PLAN IS ACCURATE FOR SIGNING ONLY

SIGN PLAN

SCALE 1"=50′

S-3

REVISED BY	DATE REVISED

CALCULATED-DESIGNED BY

CHECKED BY

CONSULTANT FUNCTIONAL SUPERVISOR

ED KOUZI

STATE OF CALIFORNIA - DEPARTMENT OF TRANSPORTATION

Caltrans

LAST REVISION 00-00-00

DATE PLOTTED => 7/14/2009
TIME PLOTTED => 9:52:07 AM

RELATIVE BORDER SCALE IS IN INCHES 0 1 2 3

USERNAME => SmithJH
DGN FILE => ...\0f150oa003.dgn

CU 08220

EA 0F1500

Dist	COUNTY	ROUTE	POST MILES TOTAL PROJECT	SHEET No.	TOTAL SHEETS
8	SBd	10	33.3/R36.9	XXX	XXX

REGISTERED CIVIL ENGINEER DATE

PLANS APPROVAL DATE

REGISTERED PROFESSIONAL ENGINEER No. Exp. CIVIL STATE OF CALIFORNIA

THE STATE OF CALIFORNIA OR ITS OFFICERS OR AGENTS SHALL NOT BE RESPONSIBLE FOR THE ACCURACY OR COMPLETENESS OF ELECTRONIC COPIES OF THIS PLAN SHEET.

SANBAG
1170 WEST 3RD STREET
2ND FLOOR
SAN BERNARDINO, CA 92410

AECOM
999 W. TOWN & COUNTRY RD
ORANGE, CA 92868

NOTES:

SEE S-1 FOR LEGEND.

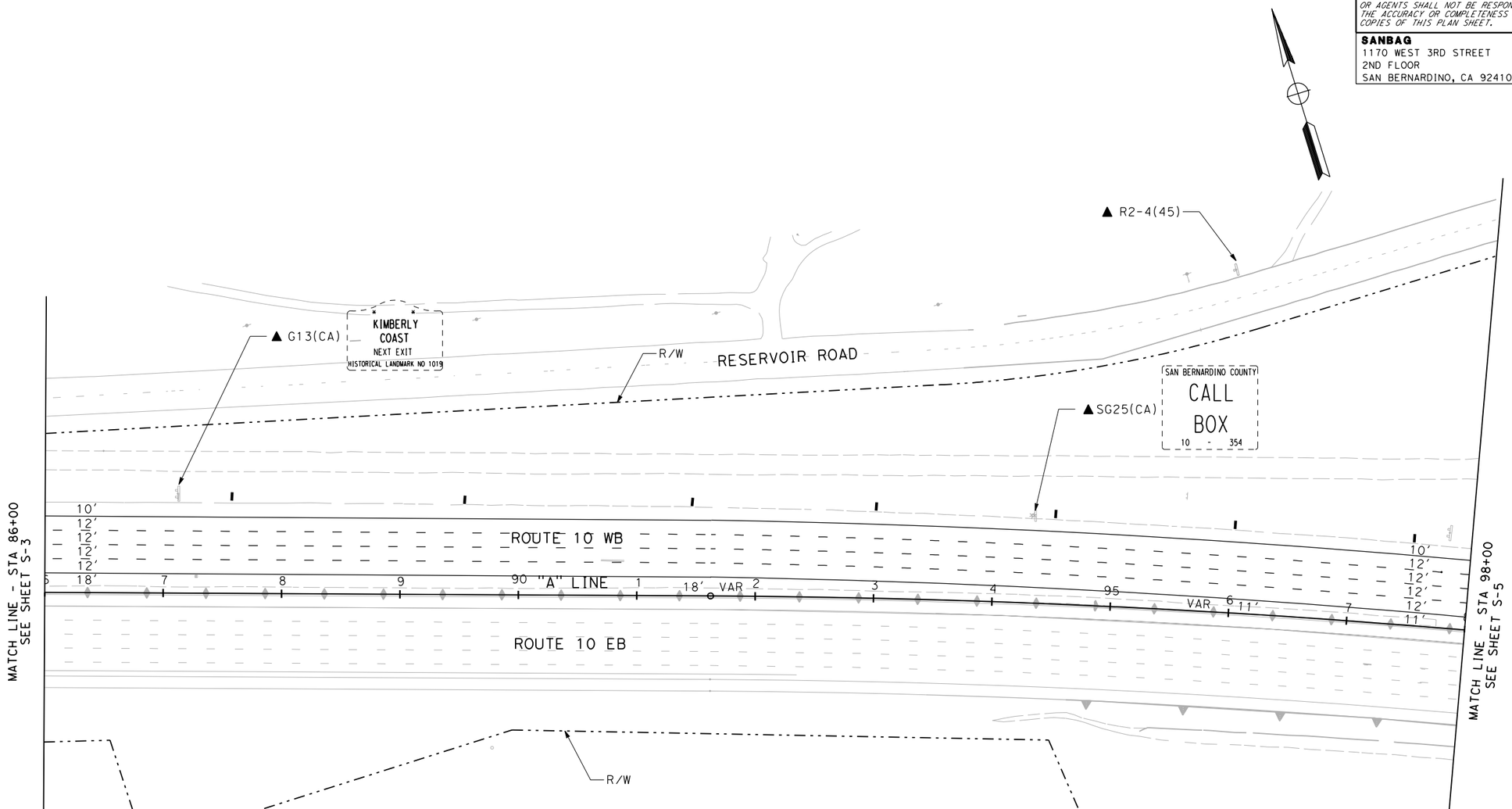

THIS PLAN ACCURATE FOR SIGNING ONLY

SIGN PLAN

SCALE 1"=50'

S-4

STATE OF CALIFORNIA - DEPARTMENT OF TRANSPORTATION

Caltrans

CONSULTANT FUNCTIONAL SUPERVISOR: ED KOUZI

CALCULATED-DESIGNED BY

CHECKED BY

REVISED BY

DATE REVISED

LAST REVISION 00-00-00

DATE PLOTTED => 7/14/2009
TIME PLOTTED => 9:52:08 AM

RELATIVE BORDER SCALE IS IN INCHES 0 1 2 3

USERNAME => SmithJH
DGN FILE => ...\0f150oa004.dgn

CU 08220

EA 0F1500

Dist	COUNTY	ROUTE	POST MILES TOTAL PROJECT	SHEET No.	TOTAL SHEETS
8	SBd	10	33.3/R36.9	XXX	XXX

REGISTERED CIVIL ENGINEER DATE

PLANS APPROVAL DATE

REGISTERED PROFESSIONAL ENGINEER No. Exp. CIVIL STATE OF CALIFORNIA

THE STATE OF CALIFORNIA OR ITS OFFICERS OR AGENTS SHALL NOT BE RESPONSIBLE FOR THE ACCURACY OR COMPLETENESS OF ELECTRONIC COPIES OF THIS PLAN SHEET.

SANBAG
1170 WEST 3RD STREET
2ND FLOOR
SAN BERNARDINO, CA 92410

AECOM
999 W. TOWN & COUNTRY RD
ORANGE, CA 92868

NOTES:

SEE S-1 FOR LEGEND.

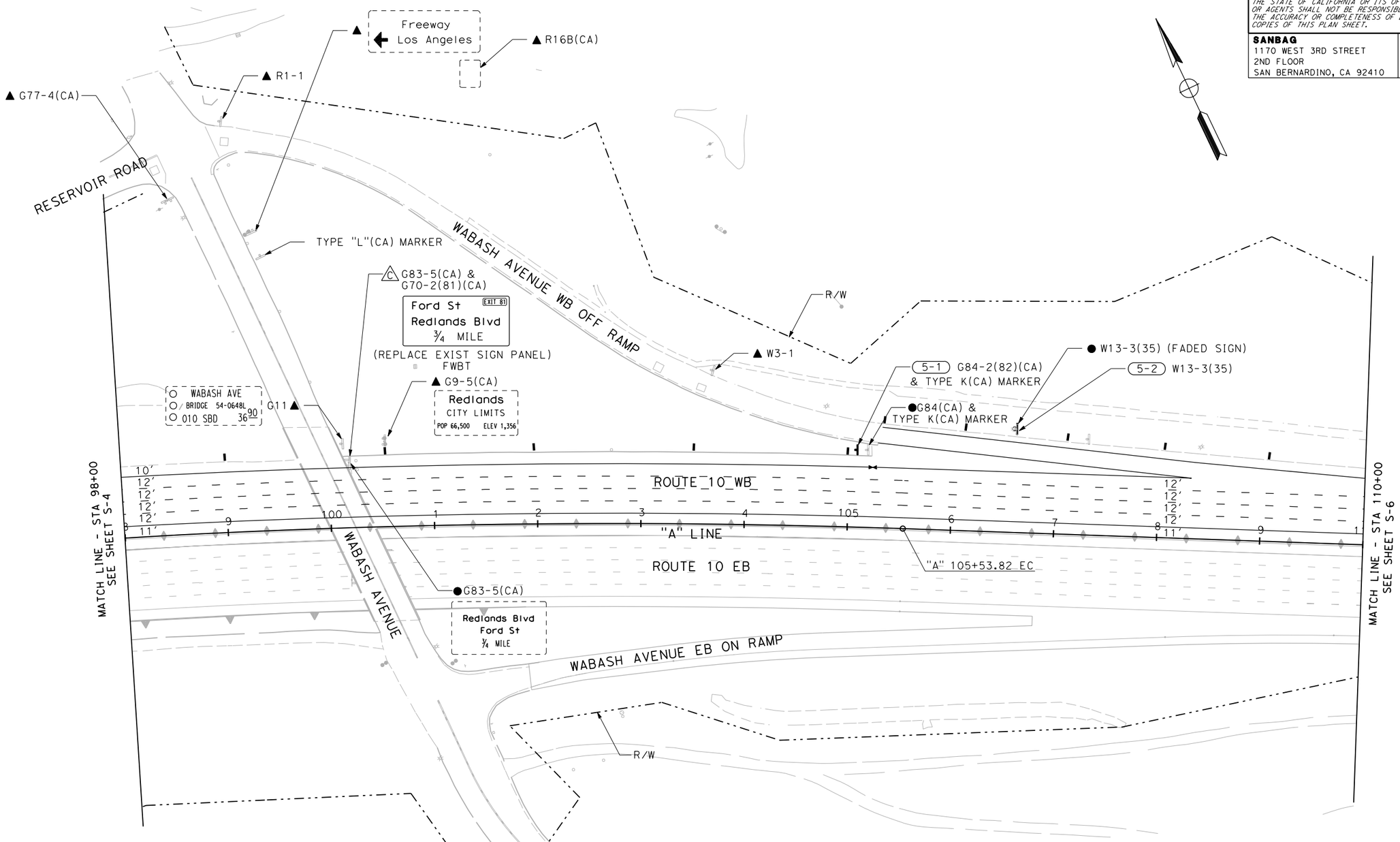

THIS PLAN ACCURATE FOR SIGNING ONLY

SIGN PLAN

SCALE 1"=50'

S-5

REVISED BY	DATE REVISED

CALCULATED-DESIGNED BY

CHECKED BY

CONSULTANT FUNCTIONAL SUPERVISOR

ED KOUZI

STATE OF CALIFORNIA - DEPARTMENT OF TRANSPORTATION

Caltrans

LAST REVISION 00-00-00

DATE PLOTTED => 7/14/2009
TIME PLOTTED => 9:52:09 AM

RELATIVE BORDER SCALE IS IN INCHES 0 1 2 3

USERNAME => SmithJH
DGN FILE => ...\0f150aa005.dgn

CU 08220

EA 0F1500

Dist	COUNTY	ROUTE	POST MILES TOTAL PROJECT	SHEET No.	TOTAL SHEETS
8	SBd	10	33.3/R36.9	XXX	XXX

REGISTERED CIVIL ENGINEER DATE

PLANS APPROVAL DATE

REGISTERED PROFESSIONAL ENGINEER No. Exp. CIVIL STATE OF CALIFORNIA

THE STATE OF CALIFORNIA OR ITS OFFICERS OR AGENTS SHALL NOT BE RESPONSIBLE FOR THE ACCURACY OR COMPLETENESS OF ELECTRONIC COPIES OF THIS PLAN SHEET.

SANBAG
1170 WEST 3RD STREET
2ND FLOOR
SAN BERNARDINO, CA 92410

AECOM
999 W. TOWN & COUNTRY RD
ORANGE, CA 92868

NOTES:

SEE S-1 FOR LEGEND.

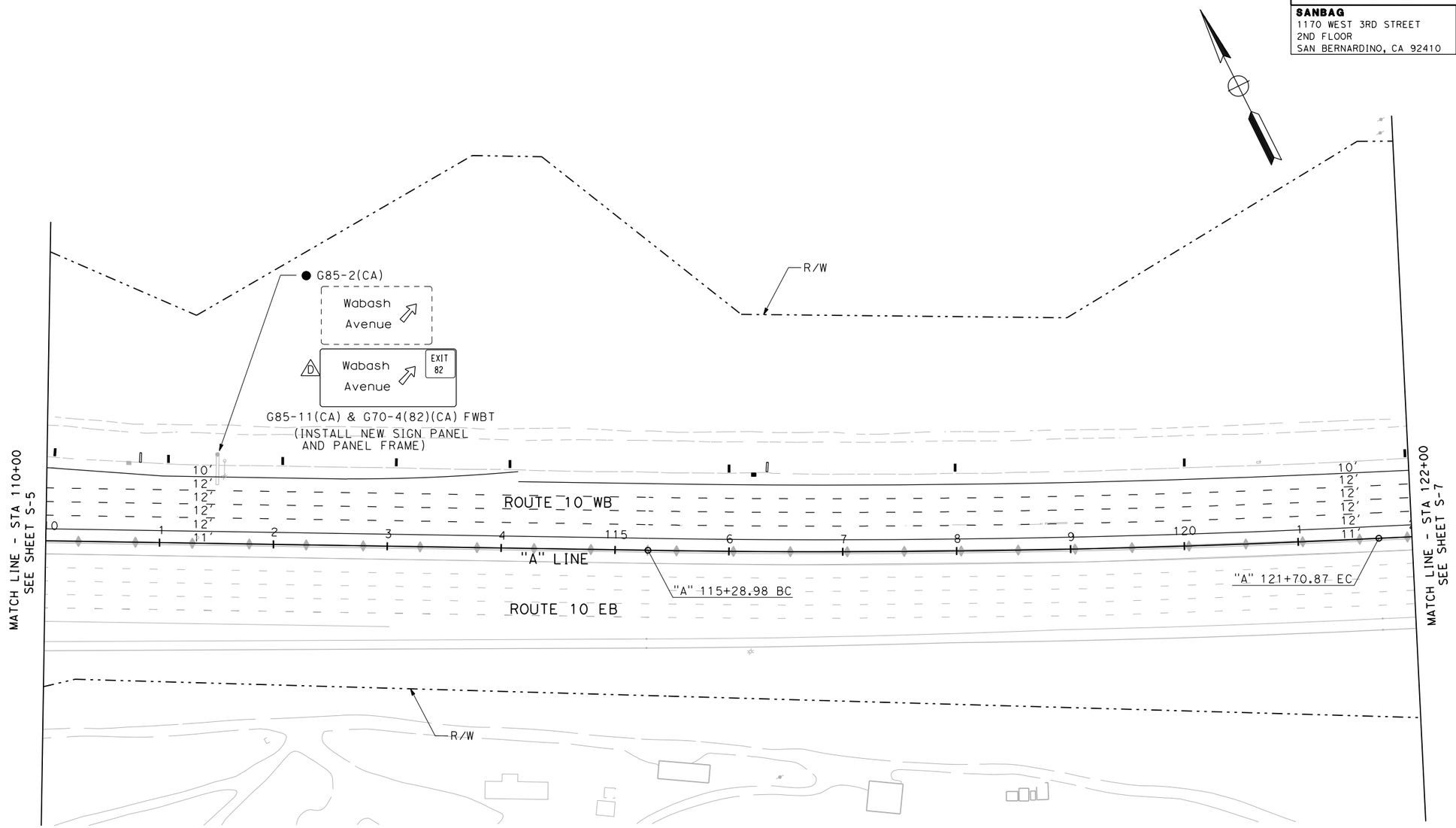

THIS PLAN ACCURATE FOR SIGNING ONLY

SIGN PLAN

SCALE 1"=50'

S-6

STATE OF CALIFORNIA - DEPARTMENT OF TRANSPORTATION

Caltrans

CONSULTANT FUNCTIONAL SUPERVISOR: ED KOUZI

CALCULATED-DESIGNED BY

CHECKED BY

REVISED BY

DATE REVISED

LAST REVISION 00-00-00

DATE PLOTTED => 7/14/2009
TIME PLOTTED => 9:52:10 AM

RELATIVE BORDER SCALE IS IN INCHES 0 1 2 3

USERNAME => SmithJH
DGN FILE => ...\0f150aa006.dgn

CU 08220

EA 0F1500

Dist	COUNTY	ROUTE	POST MILES TOTAL PROJECT	SHEET No.	TOTAL SHEETS
8	SBd	10	33.3/R36.9	XXX	XXX

REGISTERED CIVIL ENGINEER DATE

PLANS APPROVAL DATE

REGISTERED PROFESSIONAL ENGINEER No. Exp. CIVIL STATE OF CALIFORNIA

THE STATE OF CALIFORNIA OR ITS OFFICERS OR AGENTS SHALL NOT BE RESPONSIBLE FOR THE ACCURACY OR COMPLETENESS OF ELECTRONIC COPIES OF THIS PLAN SHEET.

SANBAG
1170 WEST 3RD STREET
2ND FLOOR
SAN BERNARDINO, CA 92410

AECOM
999 W. TOWN & COUNTRY RD
ORANGE, CA 92868

NOTES:

SEE S-1 FOR LEGEND.

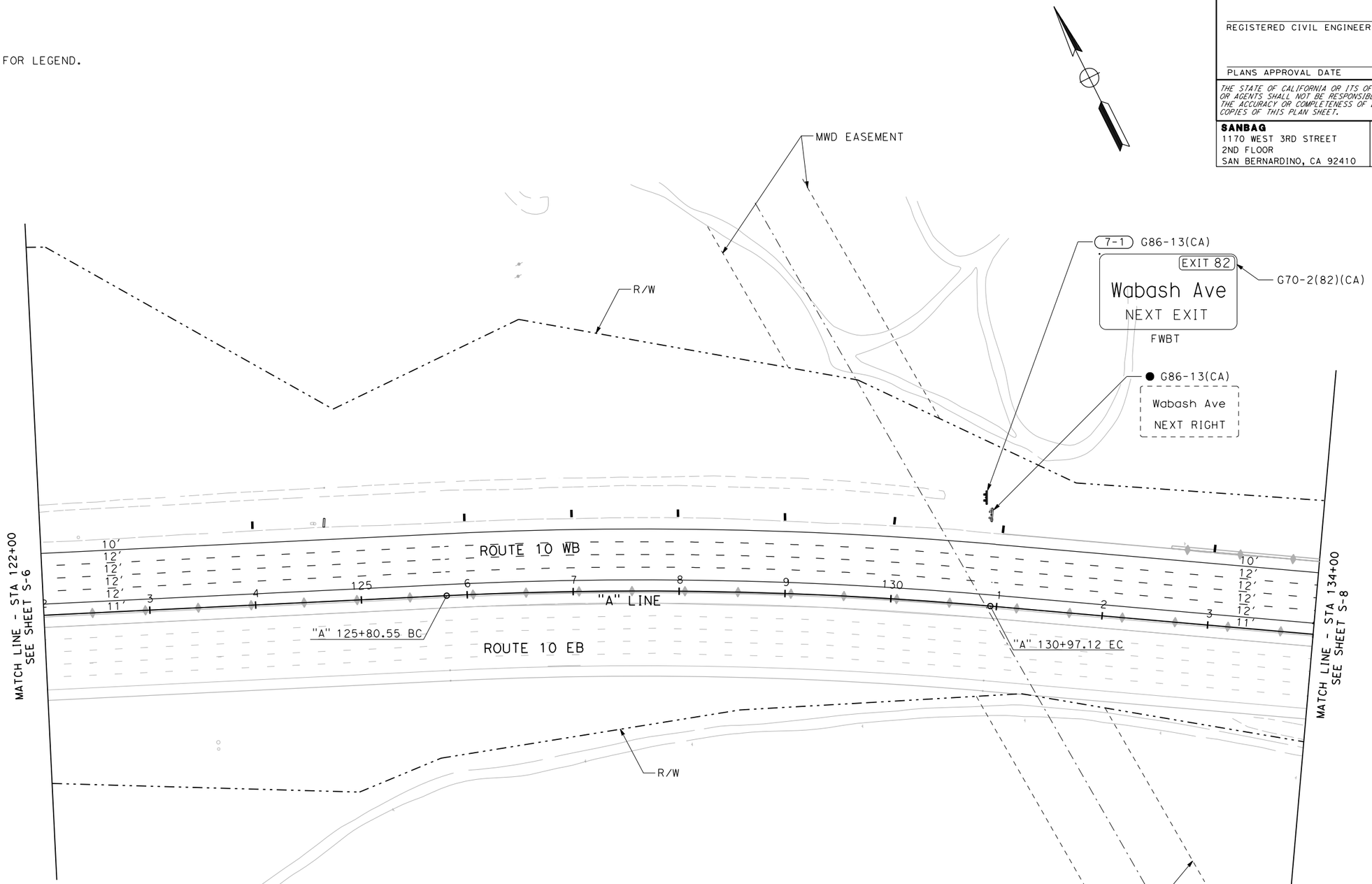

THIS PLAN IS ACCURATE FOR SIGNING ONLY

SIGN PLAN

SCALE 1"=50'

S-7

STATE OF CALIFORNIA - DEPARTMENT OF TRANSPORTATION

Caltrans

CONSULTANT FUNCTIONAL SUPERVISOR: ED KOUZI

CALCULATED-DESIGNED BY

CHECKED BY

REVISED BY

DATE REVISED

LAST REVISION 00-00-00

DATE PLOTTED => 7/14/2009
TIME PLOTTED => 9:52:11 AM

RELATIVE BORDER SCALE IS IN INCHES 0 1 2 3

USERNAME => SmithJH
DGN FILE => ...\0f150oa007.dgn

CU 08220

EA 0F1500

Dist	COUNTY	ROUTE	POST MILES TOTAL PROJECT	SHEET No.	TOTAL SHEETS
8	SBd	10	33.3/R36.9	XXX	XXX

REGISTERED CIVIL ENGINEER DATE

PLANS APPROVAL DATE

REGISTERED PROFESSIONAL ENGINEER No. Exp. CIVIL STATE OF CALIFORNIA

THE STATE OF CALIFORNIA OR ITS OFFICERS OR AGENTS SHALL NOT BE RESPONSIBLE FOR THE ACCURACY OR COMPLETENESS OF ELECTRONIC COPIES OF THIS PLAN SHEET.

SANBAG
1170 WEST 3RD STREET
2ND FLOOR
SAN BERNARDINO, CA 92410

AECOM
999 W. TOWN & COUNTRY RD
ORANGE, CA 92868

NOTES:

SEE S-1 FOR LEGEND.

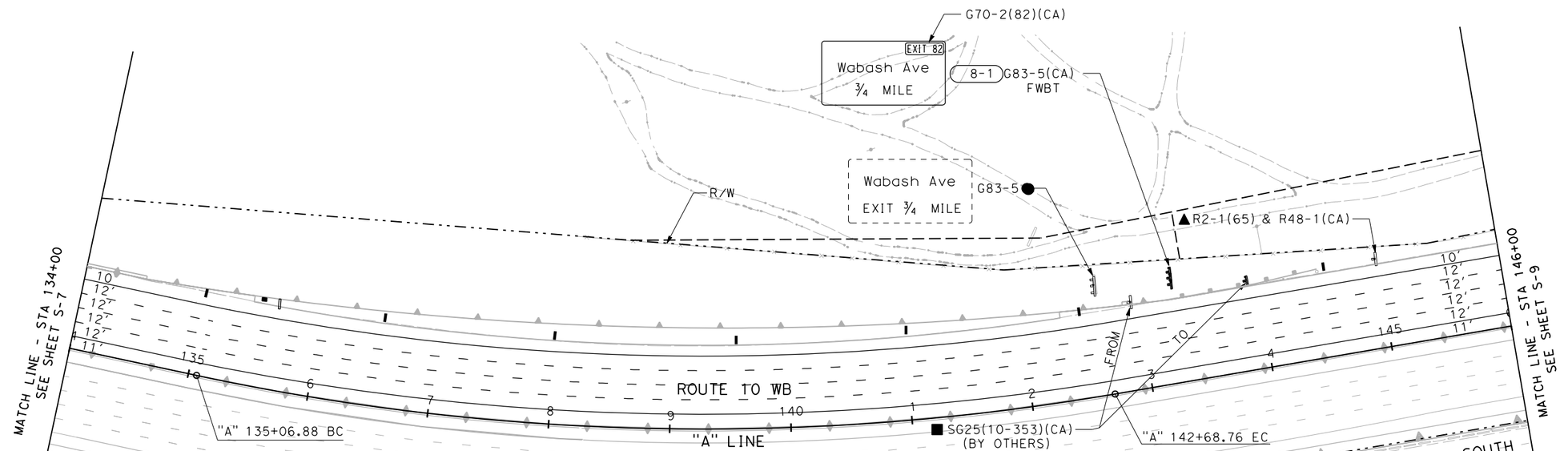

THIS PLAN IS ACCURATE FOR SIGNING ONLY

SIGN PLAN

SCALE 1"=50'

S-8

STATE OF CALIFORNIA - DEPARTMENT OF TRANSPORTATION

Caltrans

CONSULTANT FUNCTIONAL SUPERVISOR: ED KOUZI

CALCULATED-DESIGNED BY

CHECKED BY

REVISED BY

DATE REVISED

LAST REVISION 00-00-00

DATE PLOTTED => 7/14/2009
TIME PLOTTED => 9:52:13 AM

RELATIVE BORDER SCALE IS IN INCHES 0 1 2 3

USERNAME => SmithJH
DGN FILE => ...\0f150oa008.dgn

CU 08220

EA 0F1500

Dist	COUNTY	ROUTE	POST MILES TOTAL PROJECT	SHEET No.	TOTAL SHEETS
8	SBd	10	33.3/R36.9	XXX	XXX

REGISTERED CIVIL ENGINEER DATE

PLANS APPROVAL DATE

REGISTERED PROFESSIONAL ENGINEER No. Exp. CIVIL STATE OF CALIFORNIA

THE STATE OF CALIFORNIA OR ITS OFFICERS OR AGENTS SHALL NOT BE RESPONSIBLE FOR THE ACCURACY OR COMPLETENESS OF ELECTRONIC COPIES OF THIS PLAN SHEET.

SANBAG
1170 WEST 3RD STREET
2ND FLOOR
SAN BERNARDINO, CA 92410

AECOM
999 W. TOWN & COUNTRY RD
ORANGE, CA 92868

NOTES:

SEE S-1 FOR LEGEND.

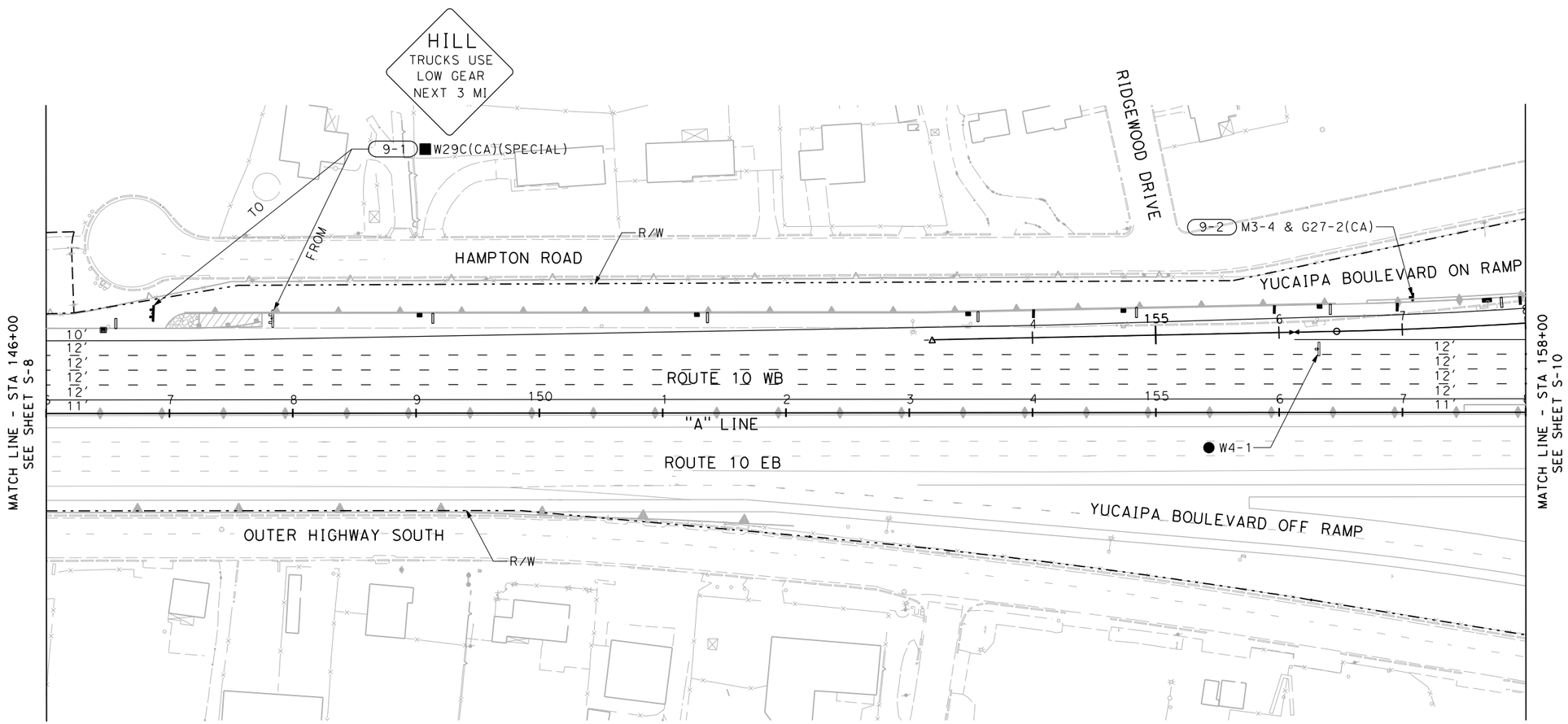

THIS PLAN IS ACCURATE FOR SIGNING ONLY

SIGN PLAN

SCALE 1"=50'

S-9

STATE OF CALIFORNIA - DEPARTMENT OF TRANSPORTATION

Caltrans

CONSULTANT FUNCTIONAL SUPERVISOR: ED KOUZI

CALCULATED-DESIGNED BY

CHECKED BY

REVISED BY

DATE REVISED

LAST REVISION 00-00-00

DATE PLOTTED => 7/14/2009
TIME PLOTTED => 9:52:14 AM

RELATIVE BORDER SCALE IS IN INCHES 0 1 2 3

USERNAME => SmithJH
DGN FILE => ...\0f150oa009.dgn

CU 08220

EA 0F1500

Dist	COUNTY	ROUTE	POST MILES TOTAL PROJECT	SHEET No.	TOTAL SHEETS
8	SBd	10	33.3/R36.9	XXX	XXX

REGISTERED CIVIL ENGINEER DATE

PLANS APPROVAL DATE

REGISTERED PROFESSIONAL ENGINEER No. Exp. CIVIL STATE OF CALIFORNIA

THE STATE OF CALIFORNIA OR ITS OFFICERS OR AGENTS SHALL NOT BE RESPONSIBLE FOR THE ACCURACY OR COMPLETENESS OF ELECTRONIC COPIES OF THIS PLAN SHEET.

SANBAG
1170 WEST 3RD STREET
2ND FLOOR
SAN BERNARDINO, CA 92410

AECOM
999 W. TOWN & COUNTRY RD
ORANGE, CA 92868

NOTES:

SEE S-1 FOR LEGEND.

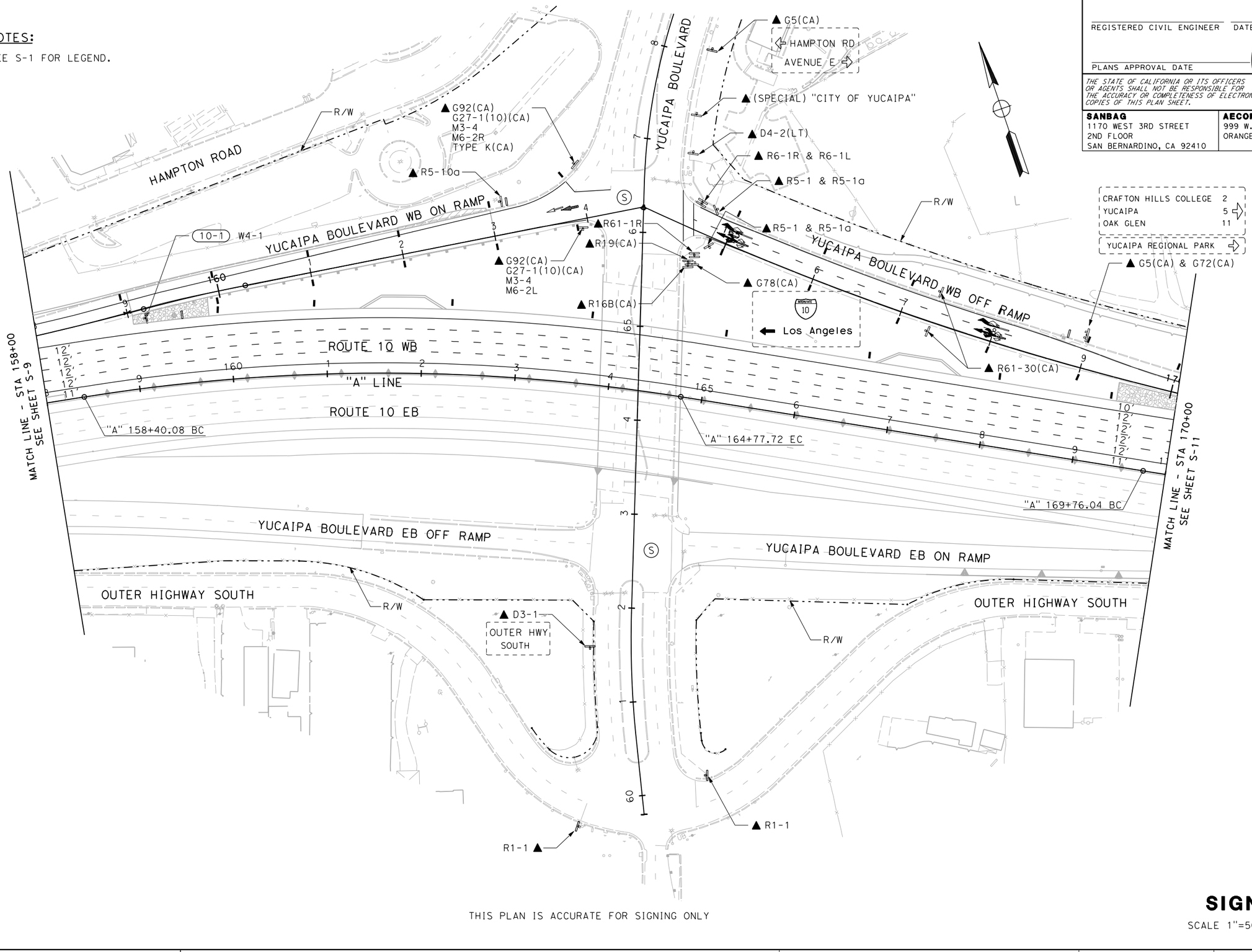

THIS PLAN IS ACCURATE FOR SIGNING ONLY

SIGN PLAN

SCALE 1"=50'

S-10

REVISED BY	DATE REVISED

CALCULATED-DESIGNED BY

CHECKED BY

CONSULTANT FUNCTIONAL SUPERVISOR: ED KOUZI

STATE OF CALIFORNIA - DEPARTMENT OF TRANSPORTATION

Caltrans

LAST REVISION 00-00-00 | DATE PLOTTED => 7/14/2009 | TIME PLOTTED => 9:52:15 AM

RELATIVE BORDER SCALE IS IN INCHES 0 1 2 3

USERNAME => SmithJH
DGN FILE => ...\0f150oa010.dgn

CU 08220

EA 0F1500

Dist	COUNTY	ROUTE	POST MILES TOTAL PROJECT	SHEET No.	TOTAL SHEETS
8	SBd	10	33.3/R36.9	XXX	XXX

REGISTERED CIVIL ENGINEER DATE

PLANS APPROVAL DATE

REGISTERED PROFESSIONAL ENGINEER No. Exp. CIVIL STATE OF CALIFORNIA

THE STATE OF CALIFORNIA OR ITS OFFICERS OR AGENTS SHALL NOT BE RESPONSIBLE FOR THE ACCURACY OR COMPLETENESS OF ELECTRONIC COPIES OF THIS PLAN SHEET.

SANBAG
1170 WEST 3RD STREET
2ND FLOOR
SAN BERNARDINO, CA 92410

AECOM
999 W. TOWN & COUNTRY RD
ORANGE, CA 92868

NOTES:

SEE S-1 FOR LEGEND.

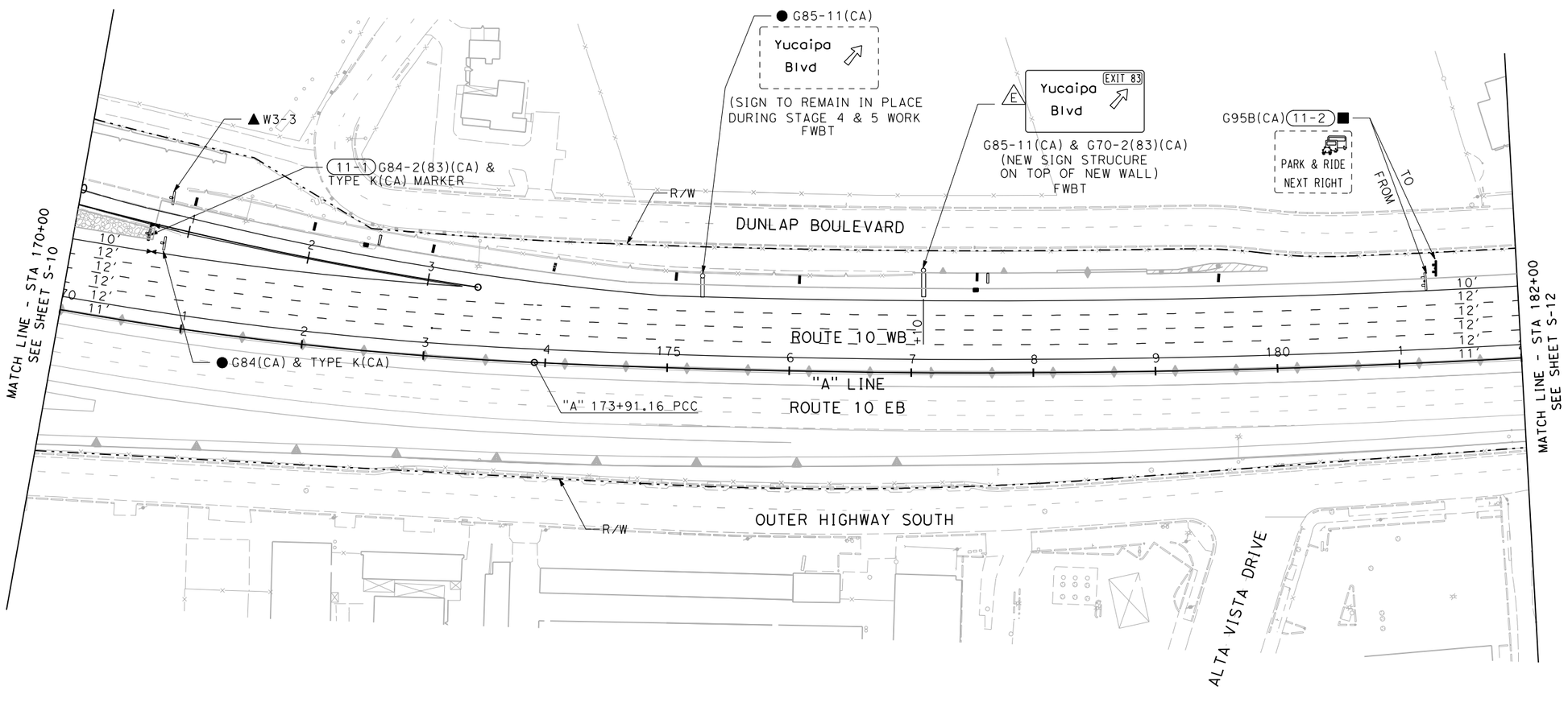

THIS PLAN IS ACCURATE FOR SIGNING ONLY

SIGN PLAN

SCALE 1"=50'

S-11

STATE OF CALIFORNIA - DEPARTMENT OF TRANSPORTATION

Caltrans

CONSULTANT FUNCTIONAL SUPERVISOR: ED KOUZI

CALCULATED-DESIGNED BY

CHECKED BY

REVISED BY

DATE REVISED

LAST REVISION 00-00-00

DATE PLOTTED => 7/14/2009
TIME PLOTTED => 9:52:17 AM

RELATIVE BORDER SCALE IS IN INCHES 0 1 2 3

USERNAME => SmithJH
DGN FILE => ...\0f150oa011.dgn

CU 08220

EA 0F1500

Dist	COUNTY	ROUTE	POST MILES TOTAL PROJECT	SHEET No.	TOTAL SHEETS
8	SBd	10	33.3/R36.9	XXX	XXX

REGISTERED CIVIL ENGINEER DATE

PLANS APPROVAL DATE

REGISTERED PROFESSIONAL ENGINEER No. Exp. CIVIL STATE OF CALIFORNIA

THE STATE OF CALIFORNIA OR ITS OFFICERS OR AGENTS SHALL NOT BE RESPONSIBLE FOR THE ACCURACY OR COMPLETENESS OF ELECTRONIC COPIES OF THIS PLAN SHEET.

SANBAG
1170 WEST 3RD STREET
2ND FLOOR
SAN BERNARDINO, CA 92410

AECOM
999 W. TOWN & COUNTRY RD
ORANGE, CA 92868

NOTES:

SEE S-1 FOR LEGEND.

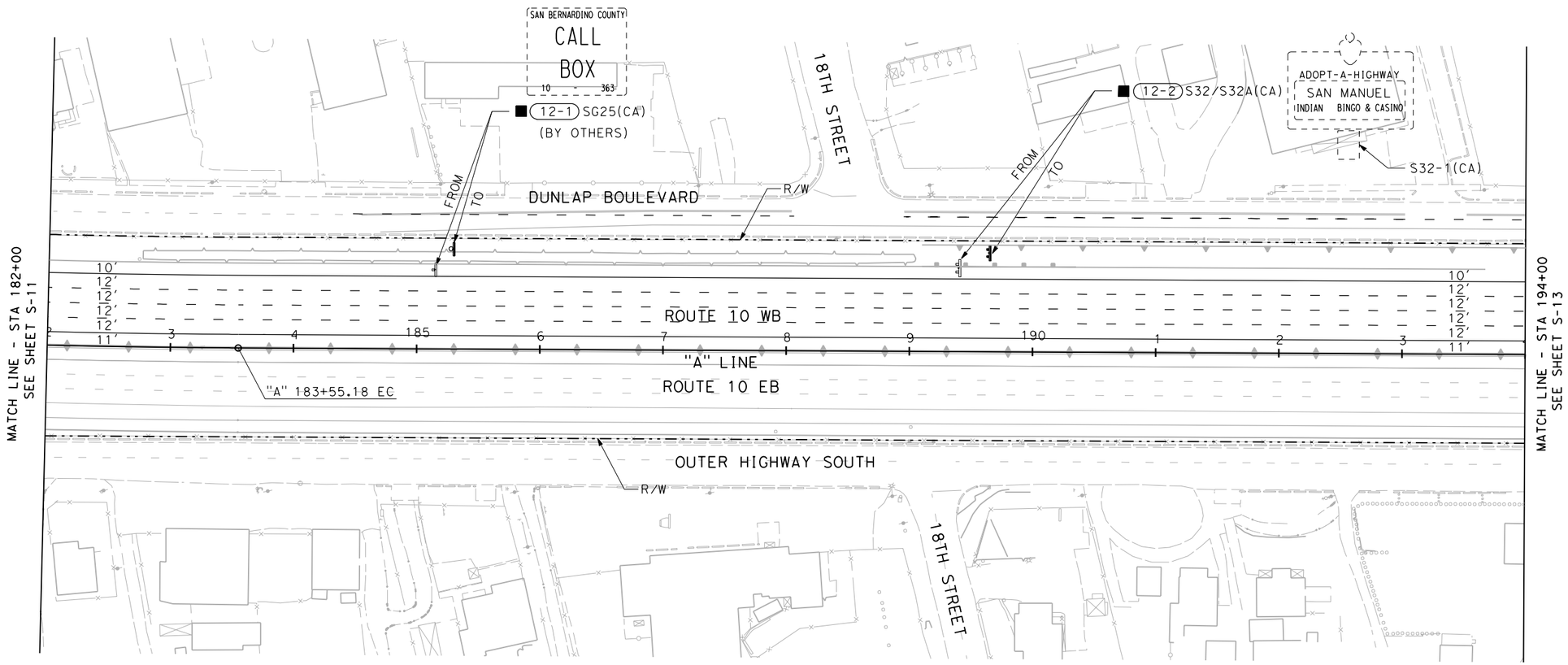

THIS PLAN IS ACCURATE FOR SIGNING ONLY

SIGN PLAN

SCALE 1"=50'

S-12

STATE OF CALIFORNIA - DEPARTMENT OF TRANSPORTATION

Caltrans

CONSULTANT FUNCTIONAL SUPERVISOR: ED KOUZI

CALCULATED-DESIGNED BY

CHECKED BY

REVISED BY

DATE REVISED

LAST REVISION 00-00-00

DATE PLOTTED => 7/14/2009
TIME PLOTTED => 9:52:18 AM

RELATIVE BORDER SCALE IS IN INCHES 0 1 2 3

USERNAME => SmithJH
DGN FILE => ...\0f150oa012.dgn

CU 08220

EA 0F1500

Dist	COUNTY	ROUTE	POST MILES TOTAL PROJECT	SHEET No.	TOTAL SHEETS
8	SBd	10	33.3/R36.9	XXX	XXX

REGISTERED CIVIL ENGINEER DATE

PLANS APPROVAL DATE

REGISTERED PROFESSIONAL ENGINEER No. Exp. CIVIL STATE OF CALIFORNIA

THE STATE OF CALIFORNIA OR ITS OFFICERS OR AGENTS SHALL NOT BE RESPONSIBLE FOR THE ACCURACY OR COMPLETENESS OF ELECTRONIC COPIES OF THIS PLAN SHEET.

SANBAG
1170 WEST 3RD STREET
2ND FLOOR
SAN BERNARDINO, CA 92410

AECOM
999 W. TOWN & COUNTRY RD
ORANGE, CA 92868

NOTES:

SEE S-1 FOR LEGEND.

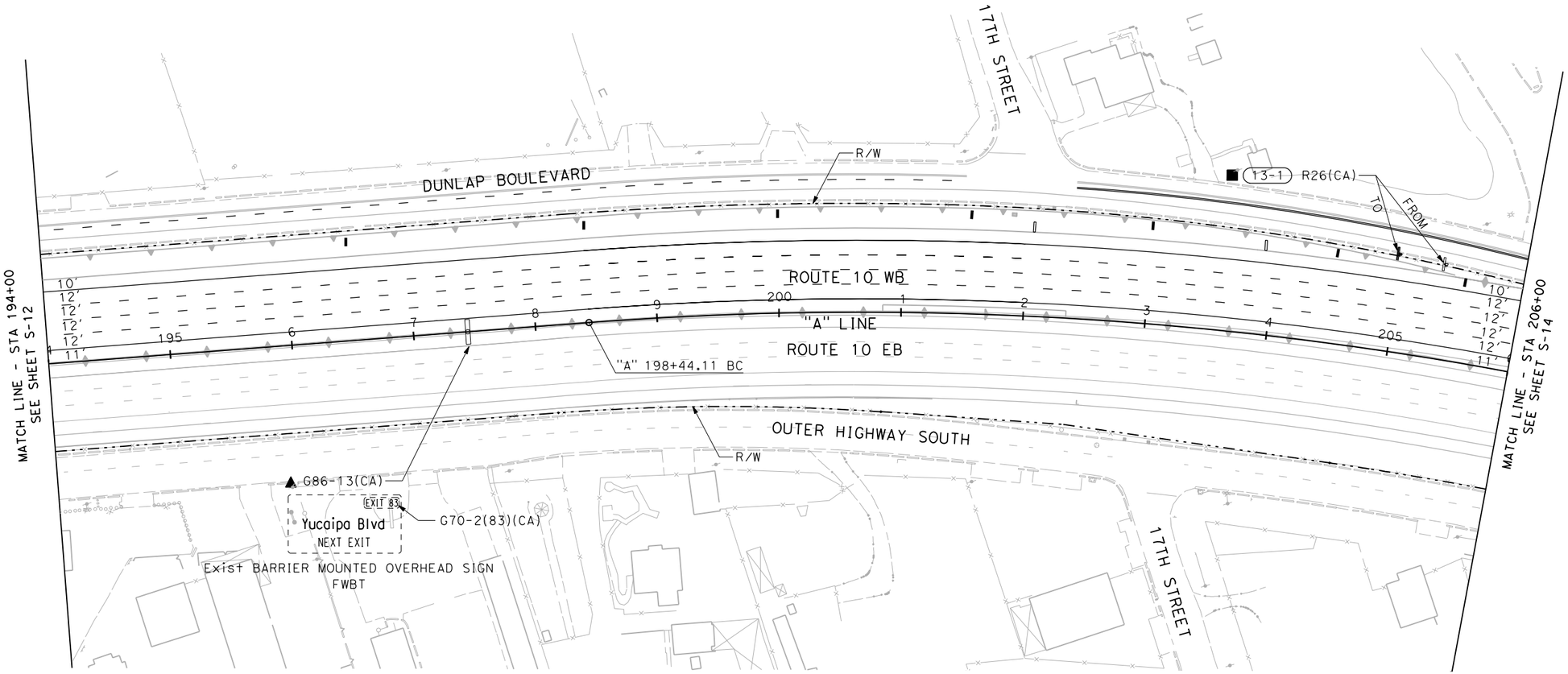

THIS PLAN IS ACCURATE FOR SIGNING ONLY

SIGN PLAN

SCALE 1"=50'

S-13

STATE OF CALIFORNIA - DEPARTMENT OF TRANSPORTATION

Caltrans

CONSULTANT FUNCTIONAL SUPERVISOR: ED KOUZI

CALCULATED-DESIGNED BY

CHECKED BY

REVISED BY

DATE REVISED

LAST REVISION 00-00-00

DATE PLOTTED => 7/14/2009
TIME PLOTTED => 9:52:20 AM

RELATIVE BORDER SCALE IS IN INCHES 0 1 2 3

USERNAME => SmithJH
DGN FILE => ...\0f150oa013.dgn

CU 08220

EA 0F1500

Dist	COUNTY	ROUTE	POST MILES TOTAL PROJECT	SHEET No.	TOTAL SHEETS
8	SBd	10	33.3/R36.9	XXX	XXX

REGISTERED CIVIL ENGINEER DATE

PLANS APPROVAL DATE

REGISTERED PROFESSIONAL ENGINEER No. Exp. CIVIL STATE OF CALIFORNIA

THE STATE OF CALIFORNIA OR ITS OFFICERS OR AGENTS SHALL NOT BE RESPONSIBLE FOR THE ACCURACY OR COMPLETENESS OF ELECTRONIC COPIES OF THIS PLAN SHEET.

SANBAG
1170 WEST 3RD STREET
2ND FLOOR
SAN BERNARDINO, CA 92410

AECOM
999 W. TOWN & COUNTRY RD
ORANGE, CA 92868

NOTES:

SEE S-1 FOR LEGEND.

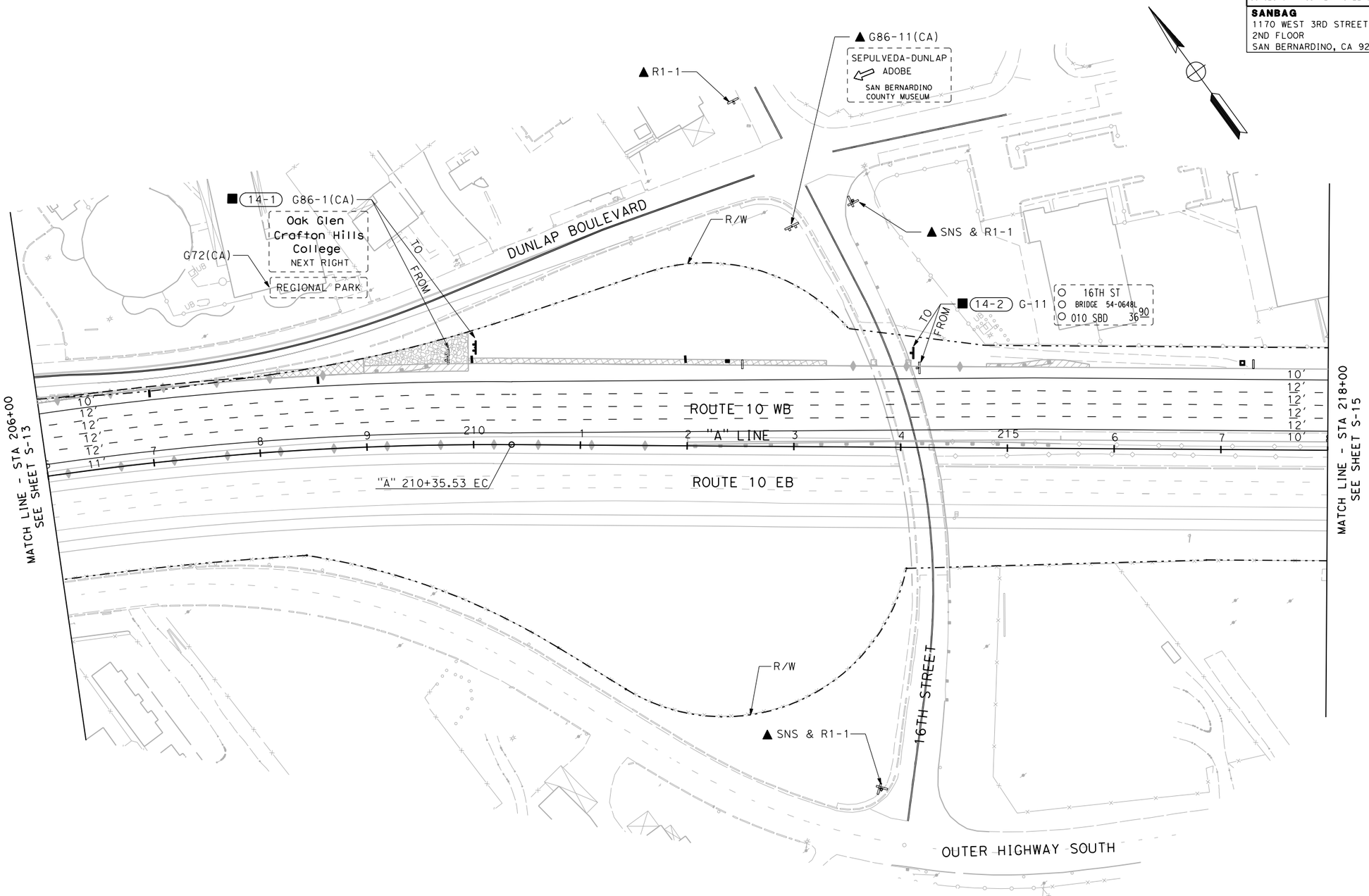

THIS PLAN IS ACCURATE FOR SIGNING ONLY

SIGN PLAN

SCALE 1"=50'

S-14

STATE OF CALIFORNIA - DEPARTMENT OF TRANSPORTATION

Caltrans

CONSULTANT FUNCTIONAL SUPERVISOR: ED KOUZI

CALCULATED-DESIGNED BY | CHECKED BY

REVISED BY | DATE REVISED

LAST REVISION 00-00-00 | DATE PLOTTED => 7/14/2009 | TIME PLOTTED => 9:52:21 AM

RELATIVE BORDER SCALE IS IN INCHES 0 1 2 3

USERNAME => SmithJH
DGN FILE => ...\0f150oa014.dgn

CU 08220 | EA 0F1500

Dist	COUNTY	ROUTE	POST MILES TOTAL PROJECT	SHEET No.	TOTAL SHEETS
8	SBd	10	33.3/R36.9	XXX	XXX

REGISTERED CIVIL ENGINEER DATE

PLANS APPROVAL DATE

REGISTERED PROFESSIONAL ENGINEER No. Exp. CIVIL STATE OF CALIFORNIA

THE STATE OF CALIFORNIA OR ITS OFFICERS OR AGENTS SHALL NOT BE RESPONSIBLE FOR THE ACCURACY OR COMPLETENESS OF ELECTRONIC COPIES OF THIS PLAN SHEET.

SANBAG
1170 WEST 3RD STREET
2ND FLOOR
SAN BERNARDINO, CA 92410

AECOM
999 W. TOWN & COUNTRY RD
ORANGE, CA 92868

NOTES:

SEE S-1 FOR LEGEND.

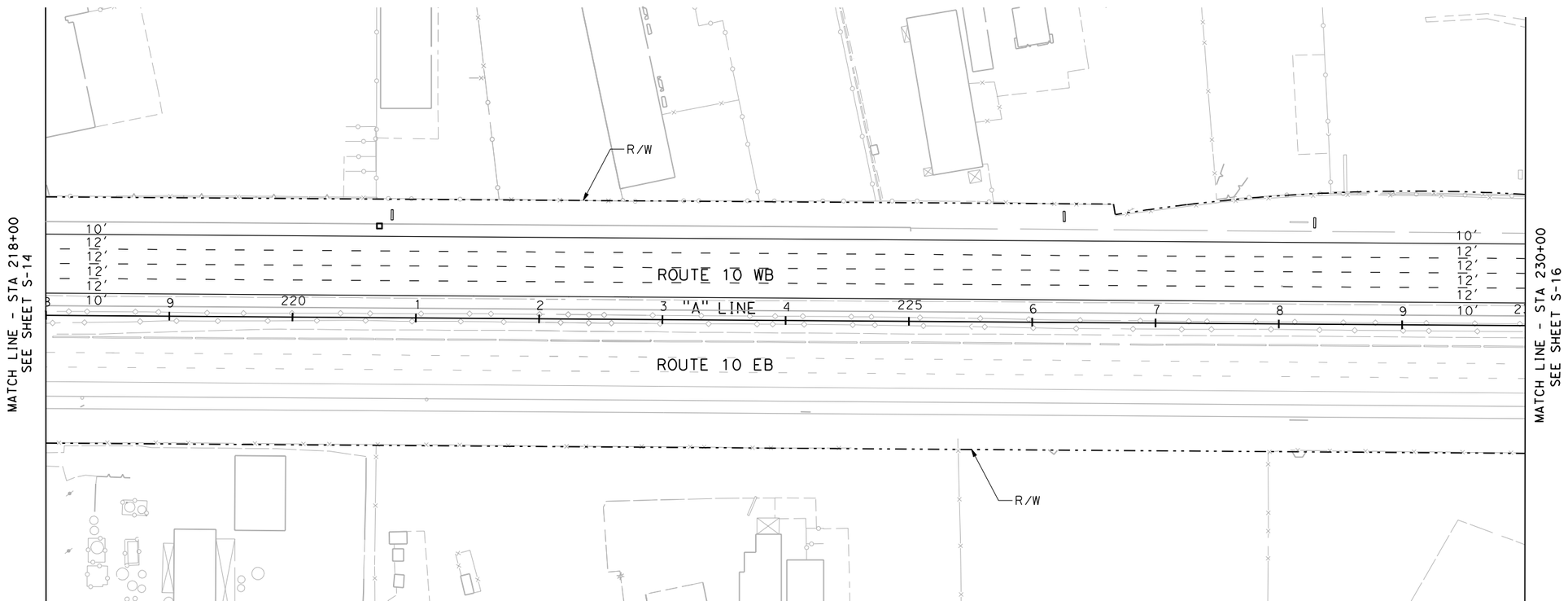

THIS PLAN IS ACCURATE FOR SIGNING ONLY

SIGN PLAN

SCALE 1"=50'

S-15

REVISED BY	DATE REVISED

CALCULATED-DESIGNED BY

CHECKED BY

CONSULTANT FUNCTIONAL SUPERVISOR

ED KOUZI

STATE OF CALIFORNIA - DEPARTMENT OF TRANSPORTATION

Caltrans

LAST REVISION 00-00-00

DATE PLOTTED => 7/14/2009
TIME PLOTTED => 9:52:22 AM

RELATIVE BORDER SCALE IS IN INCHES 0 1 2 3

USERNAME => SmithJH
DGN FILE => ...\0f150aa015.dgn

CU 08220

EA 0F1500

Dist	COUNTY	ROUTE	POST MILES TOTAL PROJECT	SHEET No.	TOTAL SHEETS
8	SBd	10	33.3/R36.9	XXX	XXX

REGISTERED CIVIL ENGINEER DATE

PLANS APPROVAL DATE

REGISTERED PROFESSIONAL ENGINEER No. Exp. CIVIL STATE OF CALIFORNIA

THE STATE OF CALIFORNIA OR ITS OFFICERS OR AGENTS SHALL NOT BE RESPONSIBLE FOR THE ACCURACY OR COMPLETENESS OF ELECTRONIC COPIES OF THIS PLAN SHEET.

SANBAG
1170 WEST 3RD STREET
2ND FLOOR
SAN BERNARDINO, CA 92410

AECOM
999 W. TOWN & COUNTRY RD
ORANGE, CA 92868

NOTES:

SEE S-1 FOR LEGEND.

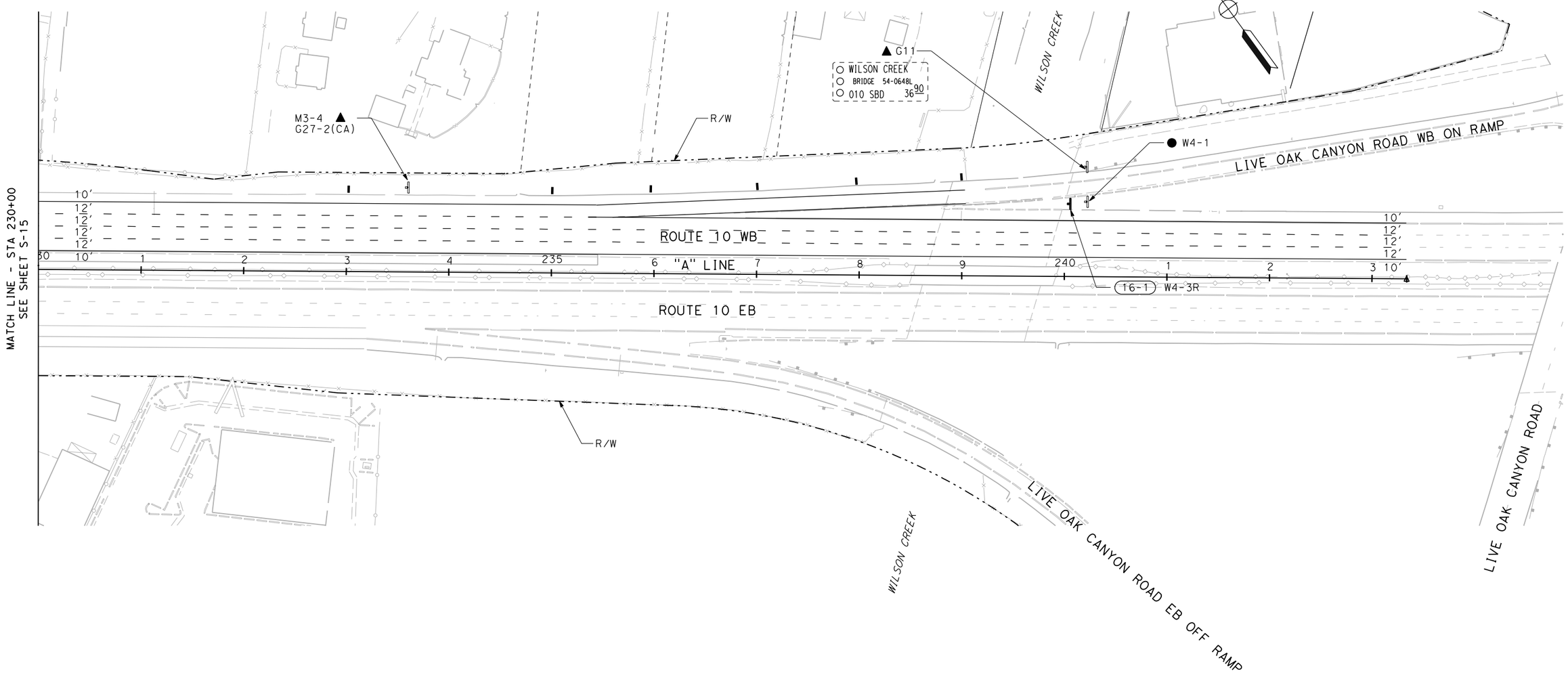

THIS PLAN IS ACCURATE FOR SIGNING ONLY

SIGN PLAN

SCALE 1"=50'

S-16

STATE OF CALIFORNIA - DEPARTMENT OF TRANSPORTATION

Caltrans

CONSULTANT FUNCTIONAL SUPERVISOR: ED KOUZI

CALCULATED-DESIGNED BY

CHECKED BY

REVISED BY

DATE REVISED

LAST REVISION 00-00-00

DATE PLOTTED => 7/14/2009
TIME PLOTTED => 9:52:24 AM

RELATIVE BORDER SCALE IS IN INCHES 0 1 2 3

USERNAME => SmithJH
DGN FILE => ...\0f150oa016.dgn

CU 08220

EA 0F1500

Dist	COUNTY	ROUTE	POST MILES TOTAL PROJECT	SHEET No.	TOTAL SHEETS
8	SBd	10	33.3/R36.9	XXX	XXX

REGISTERED CIVIL ENGINEER DATE

PLANS APPROVAL DATE

REGISTERED PROFESSIONAL ENGINEER No. Exp. CIVIL STATE OF CALIFORNIA

THE STATE OF CALIFORNIA OR ITS OFFICERS OR AGENTS SHALL NOT BE RESPONSIBLE FOR THE ACCURACY OR COMPLETENESS OF ELECTRONIC COPIES OF THIS PLAN SHEET.

SANBAG
1170 WEST 3RD STREET
2ND FLOOR
SAN BERNARDINO, CA 92410

AECOM
999 W. TOWN & COUNTRY RD
ORANGE, CA 92868

SIGN 7-1

G86-13(CA)

N T S

ENGLISH UNITS (INCHES)

A	B	C	D	E	F	G	H	J
90	162	11	10	12	16E & 12E	2	12	30

COLORS
BORDER & LEGEND - WHITE (RETROREFLECTIVE) TYPE VII
BACKGROUND - GREEN (RETROREFLECTIVE) TYPE VII
REMOVE EXISTING G86-13(CA) AND MOUNTING FRAME.
FURNISH AND INSTALL NEW PANEL AND MOUNTING FRAME
AND ADD G70-2(82)(CA) AS SHOWN

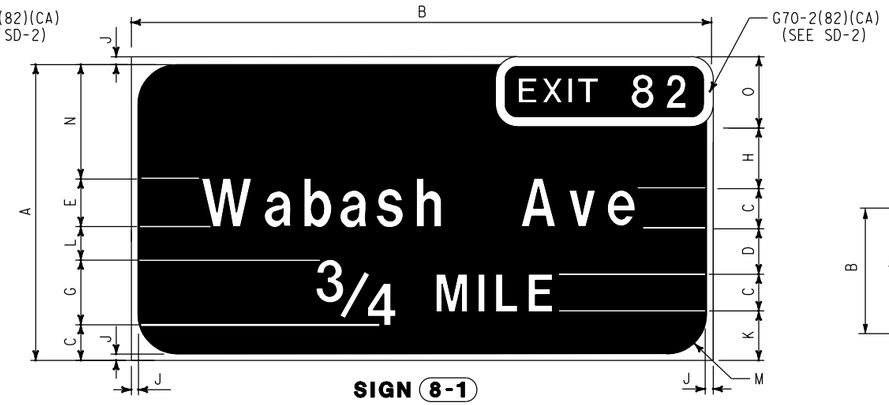

SIGN 8-1

G83-5(CA)

N T S

ENGLISH UNITS (INCHES)

A	B	C	D	E	G	H	J	K	L	M	N	O
100	192	12	15.5	16	21	14	2	16.5	11	21	40	30

COLORS
BORDER & LEGEND - WHITE (RETROREFLECTIVE) TYPE VII
BACKGROUND - GREEN (RETROREFLECTIVE) TYPE VII
REMOVE EXISTING SIGN PANEL, FRAME AND POSTS. INSTALL
3 NEW 8" x 8" POSTS TO MATCH EXISTING MOUNTING METHOD.
FURNISH AND INSTALL NEW FRAME WITH NEW SIGN PANEL
AND ADD G70-2(82)(CA) AS SHOWN

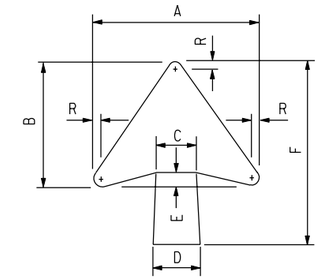

ONE LINE HORIZONTAL, VERTICAL OR DIAGONAL ARROW

N T S

LETTER SIZES	DIMENSIONS IN INCHES						
	A	B	C	D	E	F	R
4 U.C.,4 CAP	5 5/8	4 5/8	1 9/16	1 3/4	7/16	6	5/16
5" CAP	7 1/16	5 3/8	1 11/16	2	9/16	8 1/2	3/8
6" U.C.	8 7/16	6 7/16	2 1/16	2 3/8	11/16	9 1/2	1/2
6" CAP	11 1/4	8 5/8	2 3/4	3 9/16	7/8	12 3/4	5/8
8" U.C.	11 1/4	8 5/8	2 3/4	3 9/16	7/8	12 3/4	5/8
8" CAP	15 1/8	11 9/16	3 3/4	4 5/16	1 5/16	17	13/16
10.67 U.C.	15 1/8	11 9/16	3 3/4	4 5/16	1 5/16	17	13/16
10 CAP	15 1/8	11 9/16	3 3/4	4 5/16	1 5/16	17	13/16
12 CAP	18 1/4	14	4 1/2	5 1/8	1 1/2	20	7/8
13.3 U.C.	18 1/4	14	4 1/2	5 1/8	1 1/2	20	7/8
16 U.C.	22 1/4	17	5 3/8	6 3/16	1 3/4	25	1

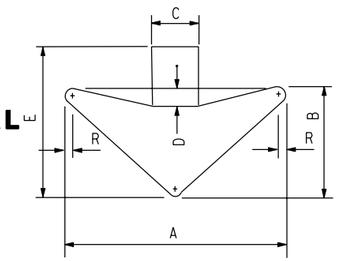

VERTICAL DOWN ARROW

N T S

DIMENSIONS IN INCHES					
A	B	C	D	E	R
24	6	5	2	16-1/2	3/4
32	16	6-1/2	13	22	1

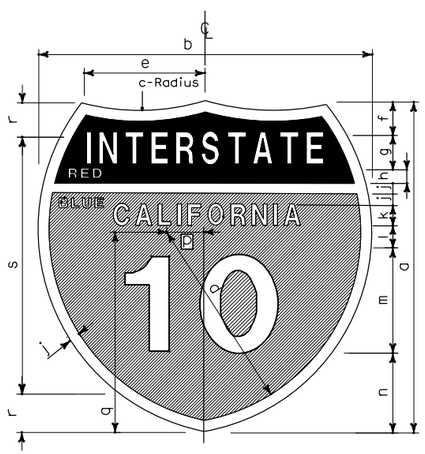

SIGN 9-2

G27-2(CA)

N T S

INTERSTATE SHIELD FOR INDEPENDENT USE

	12" Numerals
	2 DIGITS
a	36
b	36
c	22-1/2
d	22-5/16
e	12-15/16
f	3-9/16
g	3-3/4C
h	1-1/2
j	1-1/8
k	2-1/4D
l	2-1/16
m	12D
n	8-5/8
p	4-5/16
q	21-15/16
r	3
s	15

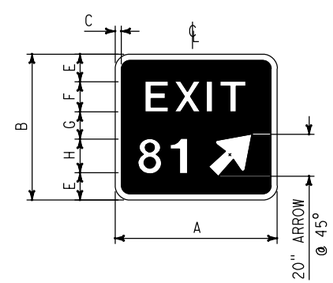

SIGN 1-1

G84-2(81)(CA)

N T S

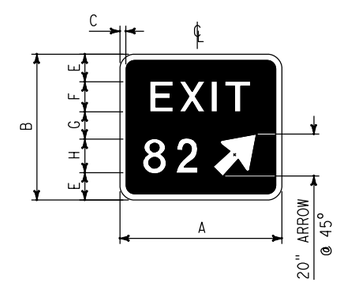

SIGN 5-1

G84-2(82)(CA)

N T S

ENGLISH UNITS (INCHES)

A	B	C	E	F	G	H
54	48	2	9	10E	8	12D

COLORS
BORDER & LEGEND - WHITE (RETROREFLECTIVE) TYPE VII
BACKGROUND - GREEN (RETROREFLECTIVE) TYPE VII
20" ARROW AT 45 DEGREES

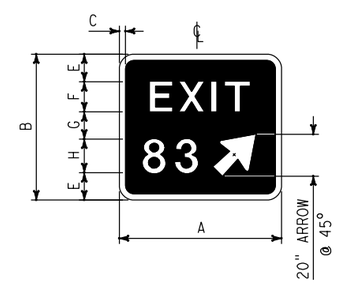

SIGN 11-1

G84-2(83)(CA)

N T S

THIS PLAN ACCURATE FOR SIGN WORK ONLY

SIGN DETAILS (ROADSIDE)

SD-1

STATE OF CALIFORNIA - DEPARTMENT OF TRANSPORTATION

Caltrans

CONSULTANT FUNCTIONAL SUPERVISOR: ED KOUZI

CALCULATED-DESIGNED BY

CHECKED BY

REVISED BY

DATE REVISED

LAST REVISION 00-00-00

DATE PLOTTED => 7/14/2009
TIME PLOTTED => 9:52:26 AM

RELATIVE BORDER SCALE IS IN INCHES 0 1 2 3

USERNAME => SmithJH
DGN FILE => ...\0f150ob001.dgn

CU 08220

EA 0F1500

Dist	COUNTY	ROUTE	POST MILES TOTAL PROJECT	SHEET No.	TOTAL SHEETS
8	SBd	10	33.3/R36.9	XXX	XXX

REGISTERED CIVIL ENGINEER DATE

PLANS APPROVAL DATE

REGISTERED PROFESSIONAL ENGINEER No. Exp. CIVIL STATE OF CALIFORNIA

THE STATE OF CALIFORNIA OR ITS OFFICERS OR AGENTS SHALL NOT BE RESPONSIBLE FOR THE ACCURACY OR COMPLETENESS OF ELECTRONIC COPIES OF THIS PLAN SHEET.

SANBAG
1170 WEST 3RD STREET
2ND FLOOR
SAN BERNARDINO, CA 92410

AECOM
999 W. TOWN & COUNTRY RD
ORANGE, CA 92868

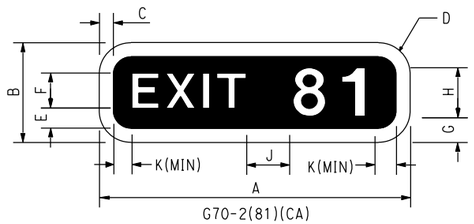

G70-2(81)(CA)
N T S

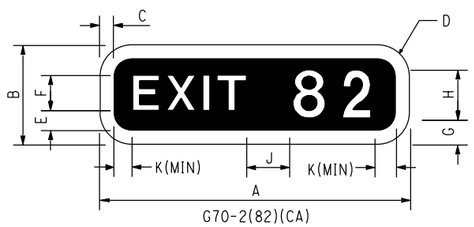

G70-2(82)(CA)
N T S

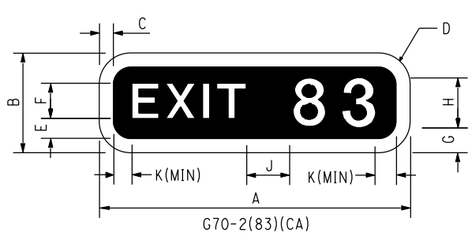

G70-2(83)(CA)
N T S

ENGLISH UNITS (INCHES)

A	B	C	D	E	F	G	H	J	K
90	30	2½	6	10	10E	7½	15E	10	7⅝

COLORS
BORDER & LEGEND - WHITE (RETROREFLECTIVE) TYPE VII
BACKGROUND - GREEN (RETROREFLECTIVE) TYPE VII

DETAIL FOR G70-2(CA)

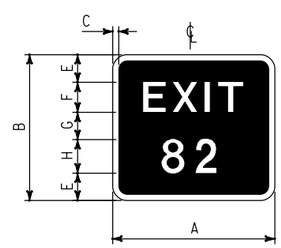

G70-4(82)(CA)
N T S

ENGLISH UNITS (INCHES)

A	B	C	E	F	G	H
42	42	2	8	8E	6	12E

COLORS
BORDER & LEGEND - WHITE (RETROREFLECTIVE) TYPE VII
BACKGROUND - GREEN (RETROREFLECTIVE) TYPE VII

DETAIL FOR G70-4(82)(CA) ON SIGN D

THIS PLAN ACCURATE FOR SIGN WORK ONLY

OVERHEAD SIGN DETAILS
SD-2

REVISED BY	DATE REVISED

CALCULATED-DESIGNED BY	CHECKED BY

CONSULTANT FUNCTIONAL SUPERVISOR: ED KOUZI

STATE OF CALIFORNIA - DEPARTMENT OF TRANSPORTATION

Caltrans

LAST REVISION 00-00-00 | DATE PLOTTED => 7/14/2009 | TIME PLOTTED => 9:52:27 AM

RELATIVE BORDER SCALE IS IN INCHES 0 1 2 3

USERNAME => SmithJH
DGN FILE => ...\0f150ob002.dgn

CU 08220

EA 0F1500

Dist	COUNTY	ROUTE	POST MILES TOTAL PROJECT	SHEET No.	TOTAL SHEETS
8	SBd	10	33.3/R36.9	XXX	XXX

REGISTERED CIVIL ENGINEER DATE

PLANS APPROVAL DATE

REGISTERED PROFESSIONAL ENGINEER No. Exp. CIVIL STATE OF CALIFORNIA

THE STATE OF CALIFORNIA OR ITS OFFICERS OR AGENTS SHALL NOT BE RESPONSIBLE FOR THE ACCURACY OR COMPLETENESS OF ELECTRONIC COPIES OF THIS PLAN SHEET.

SANBAG
1170 WEST 3RD STREET
2ND FLOOR
SAN BERNARDINO, CA 92410

AECOM
999 W. TOWN & COUNTRY RD
ORANGE, CA 92868

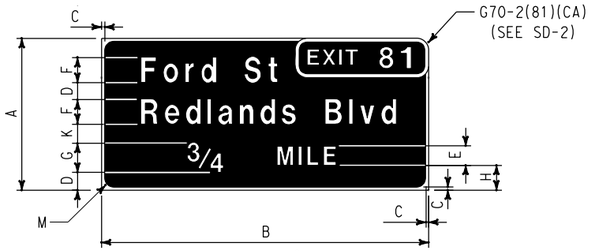

SIGN C G83-5(CA)

NOT TO SCALE

ENGLISH UNITS (INCHES)

A	B	C	D	E	F	G	H	K	M
100	216	2	12	12	16E & 12E	21	16.5	11	6

COLORS
BORDER & LEGEND - WHITE (RETROREFLECTIVE) TYPE VII
BACKGROUND - GREEN (RETROREFLECTIVE) TYPE VII

MOUNT TYPE A SIGN PANEL ON
EXISTING BRIDGE MOUNTED SIGN FRAME.

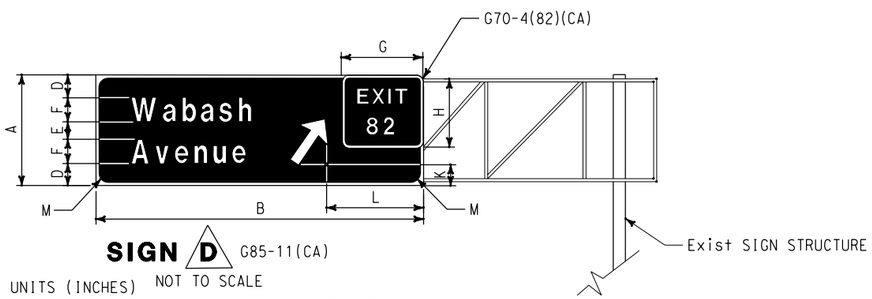

SIGN D G85-11(CA)

NOT TO SCALE

ENGLISH UNITS (INCHES)

A	B	C	D	E	F	G	H	K	L	M
70	216	2	13	12	16E & 12E	42	42	15	48	6

COLORS
BORDER & LEGEND - WHITE (RETROREFLECTIVE) TYPE VII
BACKGROUND - GREEN (RETROREFLECTIVE) TYPE VII
35" ARROW AT 30 DEGREES

MOUNT TYPE A SIGN PANEL ON
NEW 216" x 70" OVERHEAD SIGN FRAME.

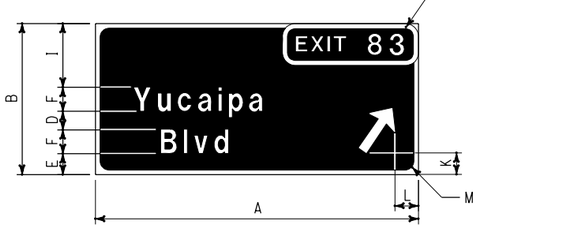

SIGN E G85-11(CA)

NOT TO SCALE

ENGLISH UNITS (INCHES)

A	B	C	D	E	F	G	I	K	L	M
192	100	2	12	14	16E & 12E	24	42	13	12	6

COLORS
BORDER & LEGEND - WHITE (RETROREFLECTIVE) TYPE VII
BACKGROUND - GREEN (RETROREFLECTIVE) TYPE VII
35" ARROW AT 30 DEGREES

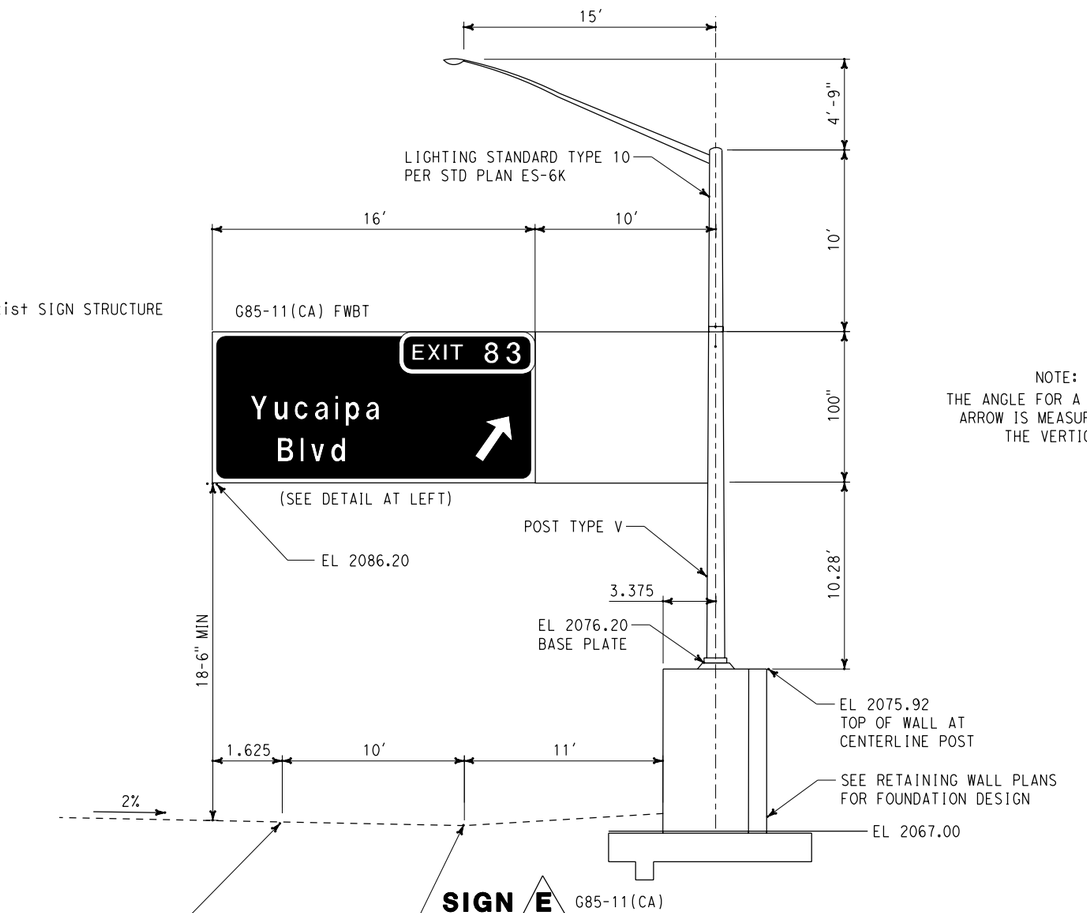

SIGN E G85-11(CA)

NOT TO SCALE

THIS PLAN ACCURATE FOR SIGN WORK ONLY

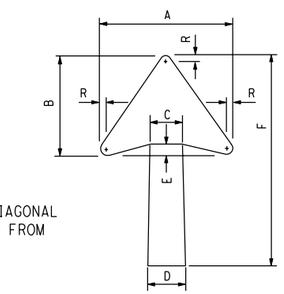

NOTE:
THE ANGLE FOR A DIAGONAL ARROW IS MEASURED FROM THE VERTICAL

TWO LINE VERTICAL OR DIAGONAL ARROW

N T S

LETTER SIZES	DIMENSIONS IN INCHES						
	A	B	C	D	E	F	R
4 U.C.,4 CAP	5 5/8	4 5/8	1 7/16	1 15/16	7/16	9 1/8	5/16
5" CAP	7 1/16	5 3/8	1 11/16	2 3/16	9/16	11	3/8
6" U.C.	8 7/16	6 7/16	2 1/16	2 11/16	11/16	13 1/4	1/2
6" CAP	11 1/4	8 5/8	2 3/4	3 9/16	7/8	17 3/4	5/8
8" U.C.	11 1/4	8 5/8	2 3/4	3 9/16	7/8	17 3/4	5/8
8" CAP	15 1/8	11 9/16	3 3/4	5	1 5/16	25	11/16
10.67 U.C.	15 1/8	11 9/16	3 3/4	5	1 5/16	25	11/16
10 CAP	18 1/4	14	4 1/2	6	1 1/2	30	7/8
12 CAP	18 1/4	14	4 1/2	6	1 1/2	30	7/8
13.3 U.C.	18 1/4	14	4 1/2	6	1 1/2	30	7/8
16 U.C.	22 1/4	17	5 3/8	7	1 3/4	35	1

SIGN DETAILS (OVERHEAD)

SD-3

STATE OF CALIFORNIA - DEPARTMENT OF TRANSPORTATION
Caltrans

CONSULTANT FUNCTIONAL SUPERVISOR: ED KOUZI

CALCULATED-DESIGNED BY | CHECKED BY

REVISED BY | DATE REVISED

LAST REVISION 00-00-00 | DATE PLOTTED => 7/14/2009 | TIME PLOTTED => 9:52:28 AM

RELATIVE BORDER SCALE IS IN INCHES 0 1 2 3

USERNAME => SmithJH
DGN FILE => ...\0f150ob003.dgn

CU 08220 | EA 0F1500

Dist	COUNTY	ROUTE	POST MILES TOTAL PROJECT	SHEET No.	TOTAL SHEETS
8	SBd	10	33.3/R36.9	XXX	XXX

REGISTERED CIVIL ENGINEER DATE

PLANS APPROVAL DATE

REGISTERED PROFESSIONAL ENGINEER No. Exp. CIVIL STATE OF CALIFORNIA

THE STATE OF CALIFORNIA OR ITS OFFICERS OR AGENTS SHALL NOT BE RESPONSIBLE FOR THE ACCURACY OR COMPLETENESS OF ELECTRONIC COPIES OF THIS PLAN SHEET.

SANBAG
1170 WEST 3RD STREET
2ND FLOOR
SAN BERNARDINO, CA 92410

AECOM
999 W. TOWN & COUNTRY RD
ORANGE, CA 92868

OVERHEAD SIGN QUANTITIES

SIGN NUMBER (X)	LOCATION	REMOVE SIGN STRUCTURE (TRUSS)	REMOVE FOUNDATION	FURNISH SIGN STRUCTURE (TRUSS)	INSTALL SIGN STRUCTURE (TRUSS)	FURNISH LAMINATED SIGN PANEL	INSTALL LAMINATED SIGN PANEL	FURNISH SIGN FRAME	INSTALL SIGN FRAME	NOTE
		lb	ft	lb	lb	SF	SF	lb	lb	
C	FWBT 100+15	-	-	-	-	195	195	-	-	-
D	FWBT 111+45	-	-	-	-	105	128	850	850	-
E	FWBT 177+10	4,000	6.0	3,600	3,600	133	133	-	-	5
	TOTAL	4,000	6.0	3,600	3,600	433	433	850	850	-

NOTES:

1. EXACT LOCATION AND POSITION OF ROADSIDE SIGNS TO BE DETERMINED BY FIELD ENGINEER.
2. POST LENGTHS GIVEN ARE APPROXIMATE. EXACT LENGTH TO BE DETERMINED BY THE ENGINEER.
3. REPLACE EXISTING SIGN PANEL.
4. WORK BY OTHERS.
5. OVERHEAD SIGN STRUCTURE (E) SHALL BE EQUIPPED WITH TYPE 10 LIGHTING STANDARD PER CALTRANS STD. PLAN ES-6K

ROADSIDE SIGNS

SIGN NO.	PANEL SIZE (INCHES)	SIGN CODE	POST SIZE 4" × 4"	POST SIZE 4" × 6"	POST SIZE 6" × 6"	RELOCATE SIGN ONE POST (EA)	RELOCATE SIGN TWO POST (EA)	INSTALL SIGN ONE POST (EA)	INSTALL SIGN TWO POST (EA)	INSTALL SIGN (STRAP & SADDLE BRACKET METHOD) (EA)	REPLACE SIGN PANEL	REMOVE ROADSIDE SIGN (EA)	SEE NOTE
1-1	54x48	G84-2(81)(CA)	-	X	-	-	-	1	-	-	-	-	-
	12x6	TYPE K(CA)											
		G84(CA)	-	-	-	-	-	-	-	-	-	1	-
		TYPE K(CA)											
-	-	-	-	-	-	-	-	-	-	-	-	-	-
5-1	54x48	G84-2(82)(CA)	-	X	-	-	-	1	-	-	-	-	-
	12x6	TYPE K(CA)											
-	-	G84(CA)	-	-	-	-	-	-	-	-	-	1	-
		TYPE K(CA)											
-	-	W13-3(35)	-	-	-	-	-	-	-	-	-	1	-
5-2	36x48	W13-3(35)	-	-	-	-	-	-	-	1	-	-	3
-	-	-	-	-	-	-	-	-	-	-	-	-	-
-	-	-	-	-	-	-	-	-	-	-	-	-	-
-	-	-	-	-	-	-	-	-	-	-	-	-	-
7-1	162x60	G86-13(CA)	-	-	X	-	-	-	1	-	-	-	-
	90x30	G70-2(82)(CA)											
-	-	-	-	-	-	-	-	-	-	-	-	-	-
8-1	192X72	G83-5(CA)	-	-	-	-	-	-	-	-	1	-	3
	90X30	G70-2(82)(CA)											
-	-	G83-5(CA)	-	-	-	-	-	-	-	-	-	1	-
-	-	-	-	-	-	-	-	-	-	-	-	-	-
9-1	48X48	W-29C(CA)	-	X	-	-	1	-	-	-	-	-	-
		(SPEC. CA)											
-	-	W-4-1	-	-	-	-	-	-	-	-	-	1	-
-	-	-	-	-	-	-	-	-	-	-	-	-	-
9-2	30X15	M3-4	X	-	-	-	-	1	-	-	-	1	-
	36X36	G27-2(CA)											
-	-	-	-	-	-	-	-	-	-	-	-	-	-
10-1	30X30	W4-1	-	X	-	-	-	1	-	-	-	-	-
SUBTOTAL		-	-	-	-	-	1	4	1	1	1	6	-

ROADSIDE SIGNS

SIGN NO.	PANEL SIZE (INCHES)	SIGN CODE	POST SIZE 4" × 4"	POST SIZE 4" × 6"	POST SIZE 6" × 6"	RELOCATE SIGN ONE POST (EA)	RELOCATE SIGN TWO POST (EA)	INSTALL SIGN ONE POST (EA)	INSTALL SIGN TWO POST (EA)	INSTALL SIGN (STRAP & SADDLE BRACKET METHOD) (EA)	REPLACE SIGN PANEL	REMOVE ROADSIDE SIGN (EA)	SEE NOTE
11-1	54X48	G84-2(83)(CA)	-	X	-	-	-	1	-	-	-	-	-
	12X6	TYPE K(CA)											
-	-	G85-11(CA)	-	-	-	-	-	-	-	-	-	1	-
-	-	G84(CA)	-	-	-	-	-	-	-	-	-	1	-
		TYPE K(CA)											
-	-	-	-	-	-	-	-	-	-	-	-	-	-
11-2	96X60	G95 B(CA)	-	-	X	-	1	-	-	-	-	-	-
-	-	-	-	-	-	-	-	-	-	-	-	-	-
12-1	30X36	SG2-5(CA)	-	-	-	-	-	-	-	-	-	-	4
-	-	-	-	-	-	-	-	-	-	-	-	-	-
12-2	54X42	S32(CA)	-	X	-	-	1	-	-	-	-	-	-
	15X18	S32-5(CA)											
-	15X18	S32-1(CA)	-	-	-	-	-	-	-	-	-	-	-
-	-	-	-	-	-	-	-	-	-	-	-	-	-
13-1	12X18	R26(CA)	X	-	-	1	-	-	-	-	-	-	-
-	-	-	-	-	-	-	-	-	-	-	-	-	-
14-1	120X72	GB6-1(CA)	-	-	-	-	1	-	-	-	-	-	-
	120X18	G72(CA)											
-	-	-	-	-	-	-	-	-	-	-	-	-	-
14-2	44X24	G11	-	-	-	1	-	-	-	-	-	-	-
-	-	-	-	-	-	-	-	-	-	-	-	-	-
16-1	30x30	W4-3R	-	X	-	-	1	-	-	-	-	-	-
		W4-1	-	-	-	-	-	-	-	-	-	1	-
SUBTOTAL		-	-	-	-	2	3	1	-	-	-	3	-
TOTAL		-	-	-	-	2	4	5	1	2	1	8	

ALL DIMENSIONS ARE IN INCHES
UNLESS SHOWN OTHERWISE

THIS PLAN IS ACCURATE FOR SIGN WORK ONLY

SIGN QUANTITIES
SQ-1

REVISED BY | DATE REVISED
CALCULATED-DESIGNED BY | CHECKED BY
CONSULTANT FUNCTIONAL SUPERVISOR: ED KOUZI
STATE OF CALIFORNIA - DEPARTMENT OF TRANSPORTATION
Caltrans

LAST REVISION 00-00-00 | DATE PLOTTED => 7/14/2009 | TIME PLOTTED => 9:52:30 AM

Dist	COUNTY	ROUTE	POST MILES TOTAL PROJECT	SHEET No.	TOTAL SHEETS
8	SBd	10	33.3/R36.9	XXX	XXX

REGISTERED CIVIL ENGINEER DATE

PLANS APPROVAL DATE

REGISTERED PROFESSIONAL ENGINEER No. Exp. CIVIL STATE OF CALIFORNIA

THE STATE OF CALIFORNIA OR ITS OFFICERS OR AGENTS SHALL NOT BE RESPONSIBLE FOR THE ACCURACY OR COMPLETENESS OF ELECTRONIC COPIES OF THIS PLAN SHEET.

SANBAG
1170 WEST 3RD STREET
2ND FLOOR
SAN BERNARDINO, CA 92410

AECOM
999 W. TOWN & COUNTRY RD
ORANGE, CA 92868

SIGN PANEL MATERIAL SUMMARY

SIGN No.	SIGN CODE	SIGN SIZE L = D (in x in)	SINGLE FACE	DOUBLE FACE	SIGN FACING PANEL: BACKGROUND: SHEETING COLOR	SIGN FACING PANEL: BACKGROUND: RETROREFLECTIVE ASTM TYPE	SIGN FACING PANEL: LEGEND: SHEETING COLOR	SIGN FACING PANEL: LEGEND: RETROREFLECTIVE ASTM TYPE	SIGN FACING PANEL: GRAFFITI FILM: STANDARD	SIGN FACING PANEL: GRAFFITI FILM: PREMIUM	SIGN PANEL SUBSTRATE MATERIAL SQFT: SINGLE SHEET OR MULTIPLE SHEET: SIGN FACING PANEL: FRP 0.135 inch	SINGLE SHEET: FRAMED ALUMINUM 0.063 inch	SINGLE SHEET: FRAMED ALUMINUM 0.080 inch	SINGLE SHEET: UNFRAMED ALUMINUM 0.063 inch	SINGLE SHEET: UNFRAMED ALUMINUM 0.080 inch	SINGLE SHEET: UNFRAMED ALUMINUM 0.125 inch	SINGLE SHEET: LAMINATED: 1 inch-TYPE B	SINGLE SHEET: LAMINATED: 2½ inch (TYPE B)	SINGLE SHEET: LAMINATED: 2½ inch (TYPE H)	ROAD SIDE FORMED	OVERHEAD: LAMINATED (2" TYPE A)	OVERHEAD: FORMED W/O RSPF	OVERHEAD: FORMED WITH RSPF	REMARKS
1-1	G84-2(81)(CA)	54 x 48	X		GREEN	IV	WHITE	IV		X						18								EXIT 81
	TYPE K(CA)	12 x 6	X		YELLOW	IV				X				0.5										BLANK
5-1	G84-2(82)(CA)	54 x 48	X		GREEN	IV	WHITE	IV		X						18								EXIT 82
	TYPE K(CA)	12 x 6	X		YELLOW	IV				X				0.5										BLANK
5-2	W13-3(35)	36 x 48	X		YELLOW	IV	BLACK			X				12										RAMP - 35 MPH
7-1	G86-13(CA)	162 x 60	X		GREEN	IV	WHITE	IV		X			67.5											Wabash Ave - NEXT RIGHT
	G70-2(82)(CA)	90 x 30	X		GREEN	IV	WHITE	IV		X						18.75								EXIT 82 - SIGN OVERLAY
8-1	G83-5(CA)	192 x 100	X		GREEN	IV	WHITE	IV		X			133.3											Wabash Ave - ¾ MILES
	G70-2(82)(CA)	90 x 30	X		GREEN	IV	WHITE	IV		X						18.75								EXIT 82 - SIGN OVERLAY
9-1	W29C(CA)(SPCL)	48 x 48	X		YELLOW	IV	BLACK			X						16								HILL - TRUCKS USE LOW GEAR-NEXT 3 MI
9-2	M3-4	30 x 15	X		BLUE	IV	WHITE	IV		X				3.1										WEST
	G27-2(CA)	36 x 36	X		RED/BLUE	IV	WHITE	IV		X				9										I-10 ROUTE SHIELD
10-1	W4-1	30 x 30	X		YELLOW	IV	BLACK			X				6.25										MERGING TRAFFIC ARROW
11-1	G84-2(83)(CA)	54 x 48	X		GREEN	IV	WHITE	IV		X						18								EXIT 83
	TYPE K(CA)	12 x 6	X		YELLOW	IV	BLACK			X				0.5										BLANK
11-2	G95B(CA)	96 x 60	X		BLUE	III	WHITE	III		X			40											PARK & RIDE - NEXT RIGHT
16-1	W4-3R	36 x 36	X		YELLOW	IV	BLACK			X				9										MERGING TRAFFIC ARROW
C	G85-3(CA)	216 x 100	X		GREEN	IV	WHITE	IV		X			150									1		Ford St - Redlands Blvd - ¾ MILE
	G70-2(81)(CA)	90 x 30	X		GREEN	IV	WHITE	IV		X						18.75								EXIT 81 - SIGN OVERLAY
D	G85-11(CA)	216 x 70	X		GREEN	IV	WHITE	IV		X			105									1		Wabash Ave & ARROW
	G70-4(82)(CA)	42 x 42	X		GREEN	IV	WHITE	IV		X						12.25								EXIT 82 - SIGN OVERLAY
E	G85-11(CA)	192 X 100	X		GREEN	IV	WHITE	IV		X			133.3									1		Yucaipa Blvd & ARROW
	G70-2(83)(CA)	90 x 30	X		GREEN	IV	WHITE	IV		X						18.75								EXIT 83 - SIGN OVERLAY
TOTAL													629.1	40.85		157.25						3		

NOTES:

1. ALL ITEMS (INCLUDING WOOD AND LAMINATED TYPE L AND M POSTS) SHALL BE FURNISHED BY THE CONTRACTOR.

ALL DIMENSIONS ARE IN INCHES UNLESS SHOWN OTHERWISE

THIS PLAN IS ACCURATE FOR SIGN WORK ONLY

SIGN QUANTITIES
SQ-2

REVISED BY | DATE REVISED

CALCULATED-DESIGNED BY | CHECKED BY

CONSULTANT FUNCTIONAL SUPERVISOR: ED KOUZI

STATE OF CALIFORNIA - DEPARTMENT OF TRANSPORTATION

Caltrans

LAST REVISION 00-00-00 | DATE PLOTTED => 7/14/2009 | TIME PLOTTED => 9:52:32 AM

RELATIVE BORDER SCALE IS IN INCHES 0 1 2 3

USERNAME => SmithJH
DGN FILE => ...\0f150oc002.dgn

CU 08220 | EA 0F1500

Dist	COUNTY	ROUTE	POST MILES TOTAL PROJECT	SHEET No.	TOTAL SHEETS
8	SBd	10	33.3/R36.9	XXX	XXX

REGISTERED CIVIL ENGINEER DATE

PLANS APPROVAL DATE

REGISTERED PROFESSIONAL ENGINEER No. Exp. CIVIL STATE OF CALIFORNIA

THE STATE OF CALIFORNIA OR ITS OFFICERS OR AGENTS SHALL NOT BE RESPONSIBLE FOR THE ACCURACY OR COMPLETENESS OF ELECTRONIC COPIES OF THIS PLAN SHEET.

SANBAG
1170 WEST 3RD STREET
2ND FLOOR
SAN BERNARDINO, CA 92410

CH2MHILL
2280 MARKET STREET
SUITE 200
RIVERSIDE, CA 92501

ROADWAY QUANTITIES

ITEM	STATION	OFFSET	CONCRETE PAVEMENT	LEAN CONCRETE BASE	HMA (TYPE A)	HMA (OGFC)	HMA (TYPE A) [BOND BREAKER]	CLASS 2 AGGREGATE BASE	CLASS 2 AGGREGATE SUBBASE	TACK COAT
			CY	CY	TON	TON	TON	CY	CY	TON
MEDIAN WIDENING										
	"A" 52+98.94 TO "A" 135+01.09	Lt	7,740	3,870	-	-	1,568	-	5,418	9.7
	"A" 212+00.40 TO "A" 215+50.00	Lt	157	79	-	-	32	-	110	0.2
	"A" 215+50.00 TO "A" 235+45.00	Lt	-	-	1,497	150	-	370	-	-
OUTSIDE WIDENING										
	"A" 131+00.00 TO "A" 225+00.89	Lt	8,382	3,789	-	-	1,535	-	5,304	9.5
	"A" 135+41.81 TO "A" 142+33.43	Lt	-	-	565	-	-	168	-	-
OUTSIDE - DRAINAGE WORK										
	"A" 72+10.00 TO "A" 72+65.00	Lt	-	-	6	-	-	7	6	-
	"A" 116+16.00 TO "A" 116+70.00	Lt	-	-	6	-	-	7	5	-
MEDIAN - DRAINAGE WORK										
	"A" 157+50.00 TO "A" 158+20.00	Lt	11	5	-	-	3	-	9	0.1
	"A" 200+85.00 TO "A" 202+35.00	Lt	24	11	-	-	5	-	18	0.1
YUCAIPA WB ON RAMP										
	"Y1" 159+04.61 TO "Y1" 163+00.00	Lt	-	-	895	85	-	208	-	-
MVP										
	VARIOUS STATIONS	Lt	-	-	118	-	-	60	-	-
HMA (MISC AREA)										
	VARIOUS STATIONS	Lt	-	-	277	-	-	-	-	-
HMA DIKE										
	VARIOUS STATIONS	Lt	-	-	51	-	-	-	-	-
	TOTAL		16,314	7,754	3,415	235	3,143	820	10,870	19.6

* FOR TEMPORARY PAVEMENT QUANTITIES, SEE THQ-SHEETS.

REMOVE ASPHALT CONCRETE DIKE

STATION	OFFSET	LENGTH
		LF
"A" 60+65.00 TO "A" 61+71.56	Lt	6.6
"A" 116+06.00 TO "A" 116+80.00	Lt	74.0
TOTAL		80.6

PLACE HOT MIX ASPHALT (MISCELLANEOUS AREA)

STATION	OFFSET	PLACE AC	MASS (N)
		SQ YD	TON
"A" 147+12.09 TO "A" 147+75.00	Lt	996	169
"A" 209+95.51 TO "A" 213+30.00	Lt	268	91
"Y1" 162+00.00 TO "Y1" 162+96.13	Lt	96	17
TOTAL		1,360	277

(N) - NOT A SEPARATE PAY ITEM, FOR INFORMATION ONLY

PLACE HOT MIX ASPHALT DIKE

STATION	OFFSET	TYPE C	TYPE D	TYPE F	VOLUME (N)	MASS (N)
		LF	LF	LF	CY	TON
"A" 116+06.00 TO "A" 116+80.00	Lt	-	74	-	2.2	4.5
"A" 131+00.00 TO "A" 132+60.00	Lt	-	160	-	4.7	9.6
"A" 143+25.00 TO "A" 143+50.00	Lt	-	-	25	0.2	0.5
"A" 143+50.00 TO "A"144+60.00	Lt	110	-	-	0.5	1.2
"A" 144+60.00 TO "A" 147+12.09	Lt	-	253	-	7.5	15.2
"A" 209+95.51 TO "A" 213+30.00	Lt	-	335	-	9.9	20.0
TOTAL		110	822	25	25.0	51.0

(N) - NOT A SEPARATE PAY ITEM, FOR INFORMATION ONLY

SUMMARY OF QUANTITIES

Q-1

STATE OF CALIFORNIA - DEPARTMENT OF TRANSPORTATION

Caltrans

CONSULTANT FUNCTIONAL SUPERVISOR: MARK HAGER

CALCULATED-DESIGNED BY | CHECKED BY

REVISED BY | DATE REVISED

LAST REVISION | DATE PLOTTED => 15-JUL-2009

RELATIVE BORDER SCALE IS IN INCHES 0 1 2 3

USERNAME => atruong

CU 08220

EA 0F1504

Dist	COUNTY	ROUTE	POST MILES TOTAL PROJECT	SHEET No.	TOTAL SHEETS
8	SBd	10	33.3/R36.9	XXX	XXX

REGISTERED CIVIL ENGINEER DATE

PLANS APPROVAL DATE

REGISTERED PROFESSIONAL ENGINEER No. Exp. CIVIL STATE OF CALIFORNIA

THE STATE OF CALIFORNIA OR ITS OFFICERS OR AGENTS SHALL NOT BE RESPONSIBLE FOR THE ACCURACY OR COMPLETENESS OF ELECTRONIC COPIES OF THIS PLAN SHEET.

SANBAG
1170 WEST 3RD STREET
2ND FLOOR
SAN BERNARDINO, CA 92410

CH2MHILL
2280 MARKET STREET
SUITE 200
RIVERSIDE, CA 92501

EARTHWORK

STATION	LOCATION	ROADWAY EXCAVATION	FILL (N)
		CY	CY
"A" 52+98.94 TO "A" 62+00.00	MEDIAN - WEST	1,243	0
"A" 62+00.00 TO "A" 74+00.00	MEDIAN - WEST	1,721	0
"A" 74+00.00 TO "A" 86+00.00	MEDIAN - WEST	1,650	0
"A" 86+00.00 TO "A" 98+00.00	MEDIAN - WEST	1,800	0
"A" 98+00.00 TO "A" 110+00.00	MEDIAN - WEST	1,805	0
"A" 110+00.00 TO "A" 122+00.00	MEDIAN - WEST	1,535	0
"A" 122+00.00 TO "A" 135+01.09	MEDIAN - WEST	2,124	0
"A" 131+00.00 TO "A" 144+00.00	OUTSIDE WIDENING	2,604	389
"A" 144+00.00 TO "A" 157+00.00	OUTSIDE WIDENING	5,247	172
"A" 157+00.00 TO "A" 170+00.00	OUTSIDE WIDENING	9,801	919
"A" 170+00.00 TO "A" 182+00.00	OUTSIDE WIDENING	4,004	496
"A" 182+00.00 TO "A" 194+00.00	OUTSIDE WIDENING	5,019	3,506
"A" 194+00.00 TO "A" 206+00.00	OUTSIDE WIDENING	5,834	4,948
"A" 206+00.00 TO "A" 218+00.00	OUTSIDE WIDENING	8,814	243
"A" 218+00.00 TO "A" 225+00.00	OUTSIDE WIDENING	3,221	1,185
"A" 212+00.40 TO "A" 224+00.00	MEDIAN - EAST	3,302	417
"A" 224+00.00 TO "A" 235+45.00	MEDIAN - EAST	2,344	506
TOTAL		61,348	12,781

(N) - NOT A SEPARATE PAY ITEM, FOR INFORMATION ONLY
* FOR TEMPORARY EARTHWORK QUANTITIES, SEE THQ-SHEETS.

CONCRETE BARRIER

STATION	OFFSET	TYPE 60C	TYPE 732B	MINOR CONCRETE (GUTTER)
		LF	LF	CY
"Y1" 156+46.77 TO "Y1" 162+00.00	L+	553.0	-	20
"A" 132+60.00 TO "A" 134+50.00	L+	190.0	-	7
"A" 178+20.04 TO "A" 178+94.21	L+	-	73.5	3
"A" 205+44.85 TO "A" 209+00.00	L+	363.0	-	-
"A" 213+30.00 TO "A" 214+80.00	L+	-	150.0	-
TOTAL		1106.0	223.5	30

SINGLE THRIE BEAM BARRIER (WOOD POST)

STATION	OFFSET	SINGLE THRIE BEAM BARRIER	TERMINAL CONNECTOR
		LF	EA
"A" 212+00.40 TO "A" 215+50.00	L+	350.0	1
TOTAL	L+	350.0	1

REMOVE SINGLE METAL BEAM BARRIER

STATION	OFFSET	SINGLE THRIE BEAM BARRIER	TERMINAL CONNECTOR (N)
		LF	EA
"A" 212+00.40 TO "A" 215+50.00	L+	350.0	1
TOTAL	L+	350.0	1

(N) - NOT A SEPARATE PAY ITEM, FOR INFORMATION ONLY

ROCK BLANKET

STATION	OFFSET	AREA
		SY
"A" 146+97.00 TO "A" 147+24.00	L+	30
"A" 159+02.01 TO "A" 159+80.00	L+	131
"A" 169+36.00 TO "A" 170+66.33	L+	205
"A" 188+90.00 TO "A" 189+45.00	L+	93
"A" 203+85.31 TO "A" 205+44.85	L+	114
"A" 208+00.00 TO "A" 209+95.51	L+	192
TOTAL		765

REMOVE MBGR

STATION	OFFSET	LENGTH
		LF
"Y1" 159+52.00 TO "Y1" 163+49.00	L+	397.0
"A" 175+14.00 TO "A" 175+92.00	L+	78.0
"A" 213+51.00 TO "A" 214+68.00	L+	117.0
TOTAL		592.0

GUARD RAILING

STATION	OFFSET	TRANSITION RAILING (TYPE WB)	ALTERNATIVE FLARED TERMINAL SYSTEM	ALTERNATIVE IN-LINE TERMINAL SYSTEM	END ANCHOR ASSEMBLY (TYPE SFT)	METAL BEAM GUARD RAIL	VEGETATION CONTROL (MINOR CONCRETE)	BURIED POST ANCHOR (N)
		EA	EA	EA	EA	LF	SY	EA
"A" 143+25.00*	L+	1	-	-	-	100.0	-	1
"A" 147+12.09	L+	-	1	-	1	25.0	64	-
"Y1" 162+00.00	L+	1	1	-	-	-	53	-
"Y1" 160+60.00 TO "Y1" 163+49.00	R+	-	-	-	1	289.0	-	-
"A" 178+94.21	L+	1	1	-	-	-	55	-
"A" 189+10.00	L+	-	-	1	1	75.0	45	-
"A" 209+00.00	L+	1	1	-	-	-	77	-
"A" 214+80.00	L+	1	1	-	-	-	53	-
TOTAL		5	5	1	3	489.0	347	1

(N) - NOT A SEPARATE PAY ITEM, FOR INFORMATION ONLY

GRIND EXISTING CONCRETE PAVEMENT

STATION	OFFSET	AREA	REPAIR SPALLED JOINTS
		SY	SY
"A" 52+98.94 TO "A" 135+01.09	WB R+ ETW	2,732	48
"A" 212+40.40 TO "A" 215+50.00	WB R+ ETW	117	3
TOTAL		2,849	51

SUMMARY OF QUANTITIES

Q-2

REVISED BY | DATE REVISED
CALCULATED-DESIGNED BY | CHECKED BY
CONSULTANT FUNCTIONAL SUPERVISOR: MARK HAGER
STATE OF CALIFORNIA - DEPARTMENT OF TRANSPORTATION
Caltrans

LAST REVISION 00-00-00 | DATE PLOTTED => 15-JUL-2009

RELATIVE BORDER SCALE IS IN INCHES 0 1 2 3 | USERNAME => atruong | CU 08220 | EA 0F1504

Dist	COUNTY	ROUTE	POST MILES TOTAL PROJECT	SHEET No.	TOTAL SHEETS
8	SBd	10	33.3/R36.9	XXX	XXX

REGISTERED CIVIL ENGINEER DATE

PLANS APPROVAL DATE

REGISTERED PROFESSIONAL ENGINEER No. Exp. CIVIL STATE OF CALIFORNIA

THE STATE OF CALIFORNIA OR ITS OFFICERS OR AGENTS SHALL NOT BE RESPONSIBLE FOR THE ACCURACY OR COMPLETENESS OF ELECTRONIC COPIES OF THIS PLAN SHEET.

SANBAG
1170 WEST 3RD STREET
2ND FLOOR
SAN BERNARDINO, CA 92410

CH2MHILL
2280 MARKET STREET
SUITE 200
RIVERSIDE, CA 92501

SEAL LONGITUDINAL ISOLATION JOINT

STATION	OFFSET	LENGTH
		LF
MEDIAN WIDENING		
"A" 52+98.94 TO "A" 90+25.65	L+	7,454
"A" 90+25.65 TO "A" 105+57.46	L+	3,064
"A" 105+57.46 TO "A" 133+92.77	L+	5,672
"A" 133+92.77 TO "A" 135+01.09	L+	218
"A" 212+00.40 TO "A" 215+50.00	L+	350
OUTSIDE WIDENING		
"A" 131+00.00 TO "A" 134+30.00	L+	330
"A" 134+30.00 TO "A" 147+12.09	L+	1,283
"A" 147+12.09 TO "A" 147+75.00	L+	63
"A" 147+75.00 TO "A" 153+12.41	L+	538
"A" 153+12.41 TO "A" 154+26.00	L+	114
"A" 154+26.00 TO "A" 159+02.01	L+	477
"A" 159+02.01 TO "A" 170+66.33	L+	1,165
"A" 170+66.33 TO "A" 174+64.85	L+	399
"A" 174+64.85 TO "A" 198+45.51	L+	2,381
"A" 198+45.51 TO "A" 209+95.51	L+	1,150
"A" 209+95.51 TO "A" 210+68.82	L+	74
"A" 210+68.82 TO "A" 225+00.89	L+	1,433
MEDIAN DRAINAGE WORK		
"A" 157+00.00 TO "A" 158+20.00	L+	240
"A" 200+85.00 TO "A" 202+35.00	L+	300
LONGITUDINAL JOINT AT ETW		
"A" 52+98.94 TO "A" 135+01.09	L+	8,198
"A" 154+26.00 TO "A" 225+00.89	L+	7,107
YUCAIPA WB ON RAMP		
"A" 147+12.09 TO "A" 159+02.01	L+	1,979
YUCAIPA WB OFF RAMP		
"A" 170+66.33 TO "A" 174+64.85	L+	846
TOTAL		44,835

CHAIN LINK FENCE

STATION	OFFSET	TYPE	
		CL-6	CL-4
		LF	LF
"A" 138+56.10 TO "A" 145+97.00	L+	719	-
"A" 176+80.00 TO "A" 189+10.00	L+	1,218	-
"A" 205+44.85 TO "A" 209+00.00	L+	-	363
"A" 209+00.00 TO "A" 210+07.93	L+	129	-
TOTAL	L+	2,066	363

* FOR TEMPORARY CHAIN LINK FENCE QUANTITIES, SEE THQ-SHEETS.

SEAL PAVEMENT JOINT

STATION	OFFSET	LENGTH
		LF
MEDIAN WIDENING		
"A" 52+98.94 TO "A" 90+25.65	L+	8,340
"A" 90+25.65 TO "A" 105+57.46	L+	3,105
"A" 105+57.46 TO "A" 133+92.77	L+	4,876
"A" 133+92.77 TO "A" 135+01.09	L+	230
"A" 212+00.40 TO "A" 215+50.00	L+	351
OUTSIDE WIDENING		
"A" 131+00.00 TO "A" 134+30.00	L+	286
"A" 134+30.00 TO "A" 147+12.09	L+	970
"A" 147+12.09 TO "A" 147+75.00	L+	66
"A" 147+75.00 TO "A" 153+12.41	L+	902
"A" 153+12.41 TO "A" 154+26.00	L+	240
"A" 154+26.00 TO "A" 159+02.01	L+	1,739
"A" 159+02.01 TO "A" 170+66.33	L+	2,024
"A" 170+66.33 TO "A" 174+64.85	L+	1,209
"A" 174+64.85 TO "A" 198+45.51	L+	4,094
"A" 198+45.51 TO "A" 209+95.51	L+	1,740
"A" 209+95.51 TO "A" 210+68.82	L+	161
"A" 210+68.82 TO "A" 225+00.89	L+	2,484
MEDIAN DRAINAGE WORK		
"A" 157+00.00 TO "A" 158+20.00	L+	50
"A" 200+85.00 TO "A" 202+35.00	L+	65
TOTAL		32,932

TEMPORARY FENCE (TYPE ESA)

STATION	OFFSET	LENGTH
		LF
"A" 115+00.00 TO "A" 119+00.00	L+	449
"A" 130+00.00 TO "A" 130+74.00	L+	164
"A" 138+56.10 TO "A" 147+35.30	L+	880
TOTAL	L+	1,493

CHAIN LINK GATE

STATION	OFFSET	4' (TYPE CL-6)
		EA
"A" 188+00.00	L+	2
TOTAL		2

IRRIGATION CROSSOVERS

LOCATION		SIDE		CONDUIT TYPE (3)		(N) WATER LINE CROSSOVER	(N) SPRINKLER CONTROL CROSSOVER
LINE	STATION	R+	L+	SIZE (INCH) 8	-	SIZE (INCH)	SIZE (INCH)
				LENGTH (LF)			
"Y1" LINE	160+95	-	-	34			
TOTAL				34			

(N) - NOT A SEPARATE PAY ITEM FOR INFORMATION ONLY
X - DENOTES REQUIREMENT

CONDUIT TYPE
(Applicable when circled below and shown under the 'CONDUIT TYPE' column heading)

1 BITUMINOUS COATED CORRUGATED STEEL PIPE (0.064 INCH THICK)
2 CORRUGATED STEEL PIPE (0.064 INCH THICK)
(3) CORRUGATED HIGH DENSITY POLYETHYLENE PIPE
4 ALTERNATIVE CONDUIT

REMOVE CHAIN LINK FENCE

STATION	OFFSET	LENGTH
		LF
"A" 138+56.10 TO "A" 145+97.00	L+	719
"A" 176+80.00 TO "A" 209+30.00	L+	3,275
TOTAL		3,994

TWISTED WIRE MESH DRAPERY SYSTEM

STATION	OFFSET	AREA
		SY
"A" 132+70.00 TO "A" 142+70.00	L+	5,583
TOTAL		5,583

SUMMARY OF QUANTITIES
Q-3

REVISED BY	DATE REVISED

CALCULATED-DESIGNED BY	CHECKED BY

CONSULTANT FUNCTIONAL SUPERVISOR: MARK HAGER

STATE OF CALIFORNIA - DEPARTMENT OF TRANSPORTATION
Caltrans

LAST REVISION 00-00-00 DATE PLOTTED => 15-JUL-2009 TIME PLOTTED => 10:57

RELATIVE BORDER SCALE IS IN INCHES 0 1 2 3

USERNAME => atruong

CU 08220 EA 0F1504

DIST	COUNTY	ROUTE	POST MILES TOTAL PROJECT	SHEET No	TOTAL SHEETS
8	SBd	10	33.3/R36.9		

REGISTERED CIVIL ENGINEER DATE

PLANS APPROVAL DATE

REGISTERED PROFESSIONAL ENGINEER MOHAMMED ATIQULLAH No. C47027 Exp. 12/31/09 CIVIL STATE OF CALIFORNIA

The State of California or its officers or agents shall not be responsible for the accuracy or completeness of electronic copies of this plan sheet.

SANBAG
1170 WEST 3RD STREET, 2ND FLOOR
SAN BERNARDINO, CA 92410

CH2M HILL
2280 MARKET STREET, SUITE 200
RIVERSIDE, CA 92501

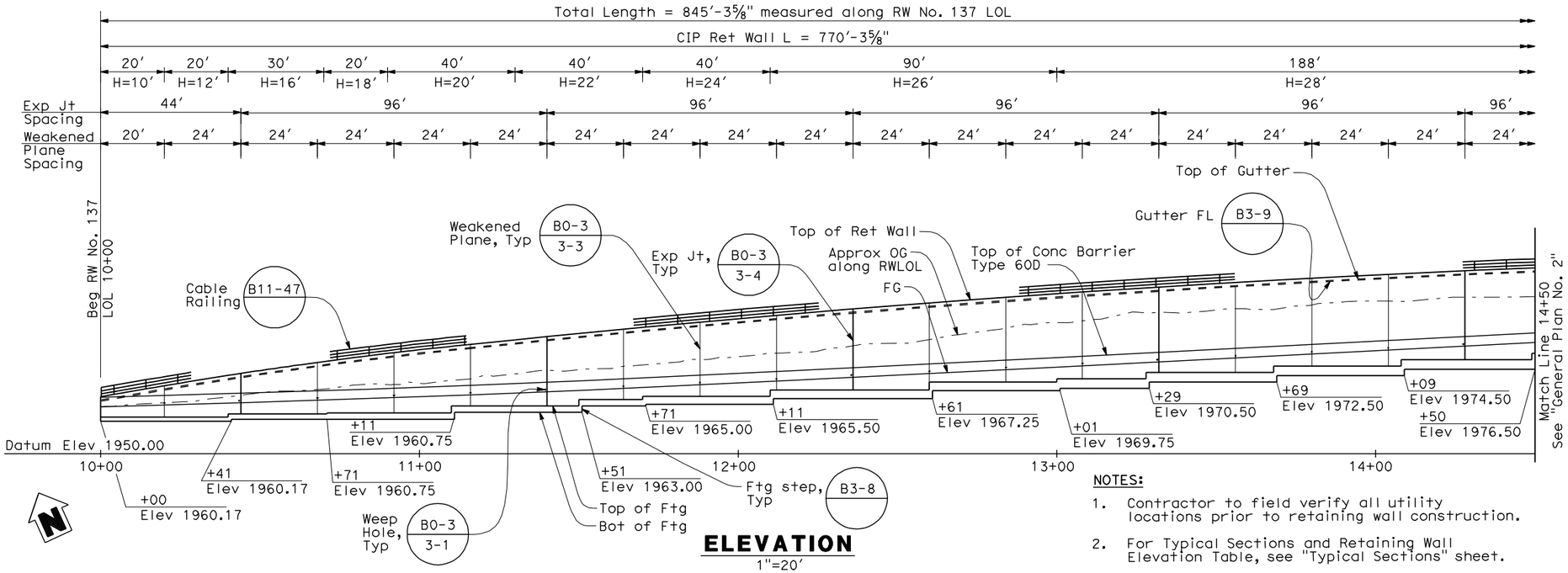

ELEVATION
1"=20'

NOTES:

1. Contractor to field verify all utility locations prior to retaining wall construction.
2. For Typical Sections and Retaining Wall Elevation Table, see "Typical Sections" sheet.
3. For Drainage System and Details, see Drainage Plans.

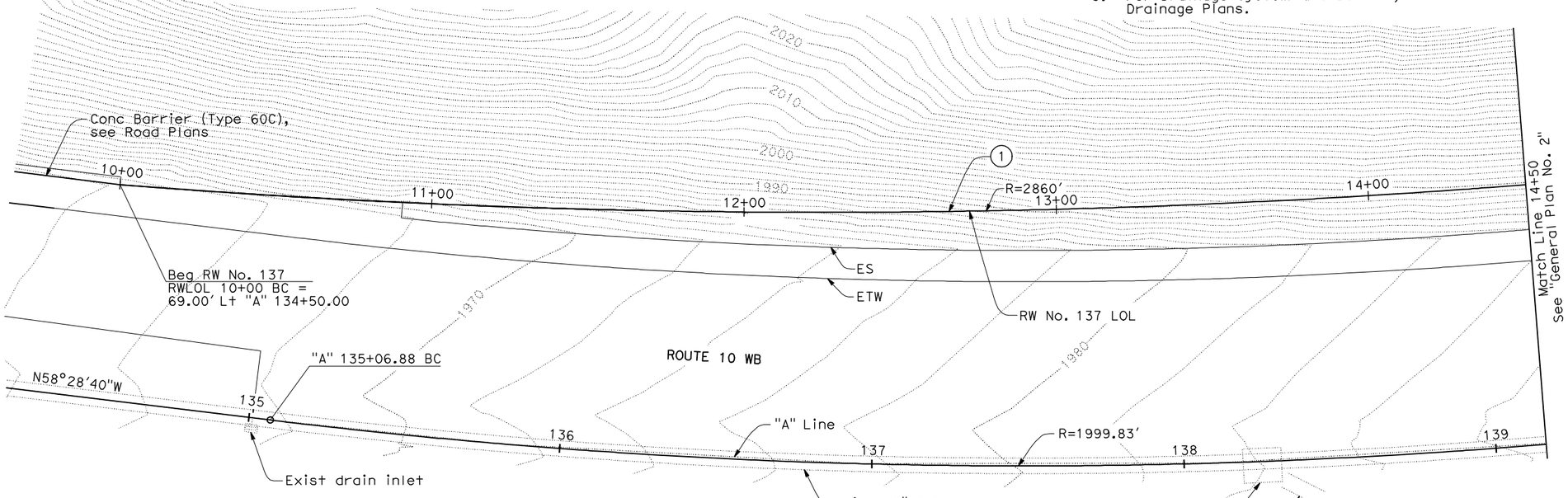

CURVE DATA

NO	R	Δ	T	L
1	2860.00'	16°56'03"	425.75'	845.30'

PLAN
1"=20'

INDEX TO PLANS

Sheet No.	Title
1	GENERAL PLAN No. 1
2	GENERAL PLAN No. 2
3	FOUNDATION LAYOUT
4	TYPICAL SECTIONS
5	RETAINING WALL DETAILS
6	ARCHITECTURAL TREATMENT DETAILS
7	LOG OF TEST BORINGS SHEET 1 OF 6
8	LOG OF TEST BORINGS SHEET 2 OF 6
9	LOG OF TEST BORINGS SHEET 3 OF 6
10	LOG OF TEST BORINGS SHEET 4 OF 6
11	LOG OF TEST BORINGS SHEET 5 OF 6
12	LOG OF TEST BORINGS SHEET 6 OF 6

STANDARD PLANS DATED MAY 2006

A10A	ACRONYMS AND ABBREVIATIONS (SHEET 1 OF 2)
A10B	ACRONYMS AND ABBREVIATIONS (SHEET 2 OF 2)
A10C	SYMBOLS (SHEET 1 OF 2)
A10D	SYMBOLS (SHEET 2 OF 2)
A62B	LIMITS OF PAYMENT FOR EXCAVATION AND BACKFILL BRIDGE SURCHARGE AND WALL
A76A	CONCRETE BARRIER TYPE 60
B0-3	BRIDGE DETAILS
B3-1	RETAINING WALL TYPE 1 H=4' THROUGH 30'
B3-8	RETAINING WALL DETAILS NO. 1
B3-9	RETAINING WALL DETAILS NO. 2
B11-47	CABLE RAILING

Standard Plan Sheet No.

Detail No.

INITIAL PS&E

Robert Zezoff
DESIGN OVERSIGHT

SIGN OFF DATE

	BY	CHECKED			
DESIGN	M. Atiqullah / E. Coates	A. Issa	LRFD	LIVE LOADING: HL-93 AND PERMIT (P-15) DESIGN LOAD	
DETAILS	E. Coates	M. Atiqullah	LAYOUT	N. Morales	M. Atiqullah
QUANTITIES	E. Coates	A. Issa	SPECIFICATIONS	M. Remolador	PLANS AND SPECS COMPARED M. Atiqullah

PREPARED FOR THE STATE OF CALIFORNIA DEPARTMENT OF TRANSPORTATION

Mohammed Atiqullah
PROJECT ENGINEER

BRIDGE NO.

POST MILE 34.93

RETAINING WALL NO. 137
GENERAL PLAN NO. 1

DESIGN GENERAL PLAN SHEET (ENGLISH) (REV. 2/25/05)

ORIGINAL SCALE IN INCHES FOR REDUCED PLANS 0 1 2 3

CU 08220
EA 0F1500

DISREGARD PRINTS BEARING EARLIER REVISION DATES 06/24/09

REVISION DATES (PRELIMINARY STAGE ONLY)

SHEET 1 OF 12

FILE => 10E-xxxx-a-gp01.dgn

USERNAME => nmorales DATE PLOTTED => 24-JUN-2009 TIME PLOTTED => 15:15

DIST	COUNTY	ROUTE	POST MILES TOTAL PROJECT	SHEET No	TOTAL SHEETS
8	SBd	10	33.3/R36.9		

REGISTERED CIVIL ENGINEER DATE

PLANS APPROVAL DATE

REGISTERED PROFESSIONAL ENGINEER MOHAMMED ATIQULLAH No. C47027 Exp. 12/31/09 CIVIL STATE OF CALIFORNIA

The State of California or its officers or agents shall not be responsible for the accuracy or completeness of electronic copies of this plan sheet.

SANBAG
1170 WEST 3RD STREET, 2ND FLOOR
SAN BERNARDINO, CA 92410

CH2M HILL
2280 MARKET STREET, SUITE 200
RIVERSIDE, CA 92501

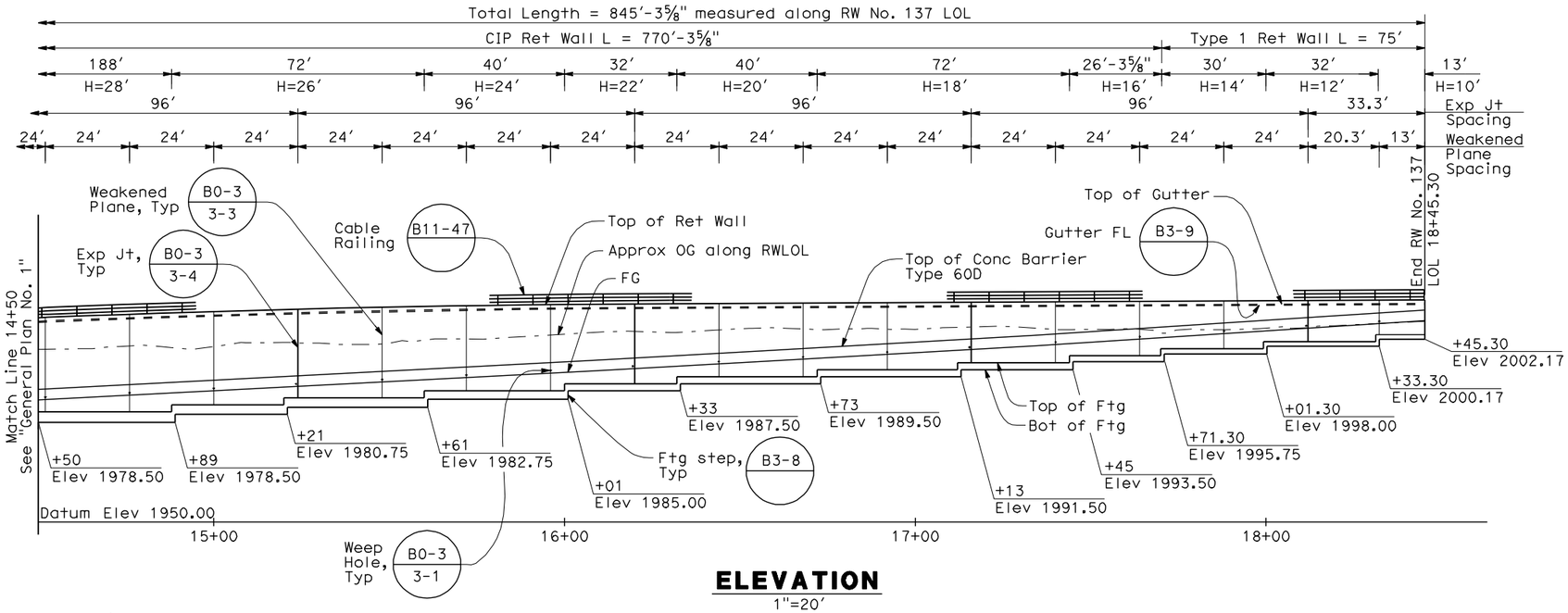

ELEVATION

1"=20'

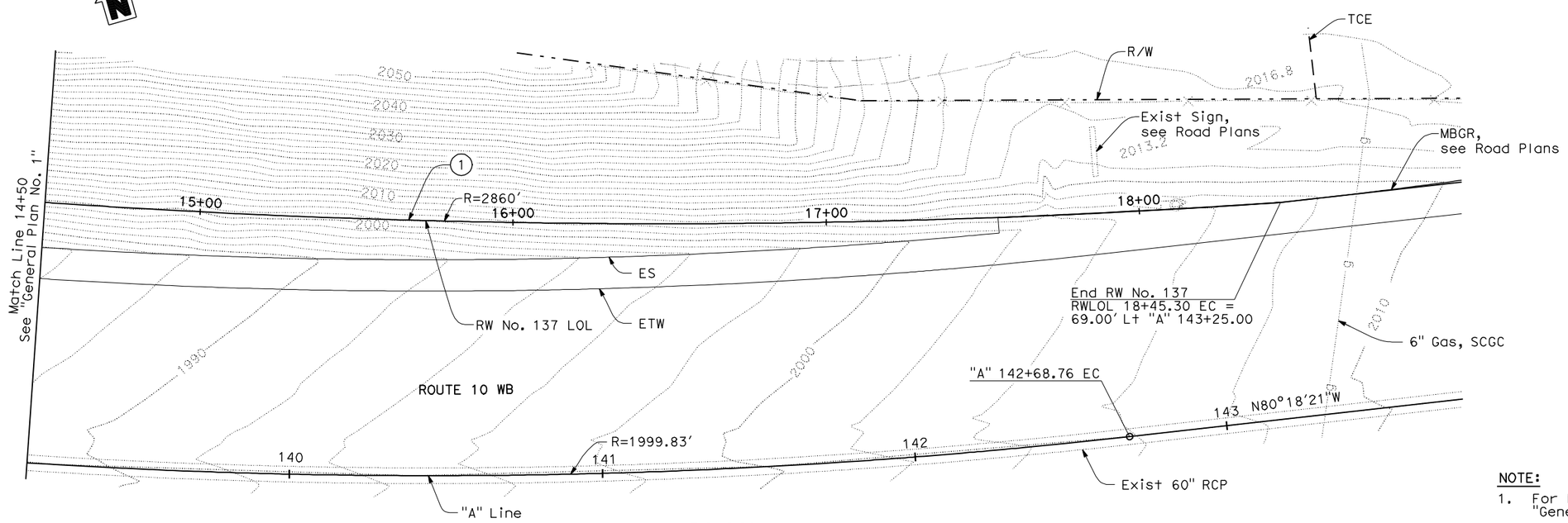

PLAN

1"=20'

NOTE:

1. For Notes and curve data information, see "General Plan No. 1" sheet.

INITIAL PS&E

Robert Zezoff, DESIGN OVERSIGHT	DESIGN	BY M. Atiqullah / E. Coates	CHECKED A. Issa	LRFD	LIVE LOADING: HL-93 AND PERMIT (P-15) DESIGN LOAD		
	DETAILS	BY E. Coates	CHECKED M. Atiqullah	LAYOUT	BY N. Morales	CHECKED M. Atiqullah	
SIGN OFF DATE	QUANTITIES	BY E. Coates	CHECKED A. Issa	SPECIFICATIONS	BY M. Remolador	PLANS AND SPECS COMPARED M. Atiqullah	

PREPARED FOR THE STATE OF CALIFORNIA DEPARTMENT OF TRANSPORTATION

Mohammed Atiqullah, PROJECT ENGINEER

BRIDGE NO.

POST MILE 34.93

RETAINING WALL NO. 137
GENERAL PLAN NO. 2

DESIGN GENERAL PLAN SHEET (ENGLISH) (REV. 2/25/05)

ORIGINAL SCALE IN INCHES FOR REDUCED PLANS 0 1 2 3

CU 08220
EA 0F1500

DISREGARD PRINTS BEARING EARLIER REVISION DATES 06/24/09

REVISION DATES (PRELIMINARY STAGE ONLY)

SHEET 2 OF 12

FILE => 10E-xxxx-a-gp02.dgn

USERNAME => nmorales DATE PLOTTED => 24-JUN-2009 TIME PLOTTED => 15:15

DIST	COUNTY	ROUTE	POST MILES TOTAL PROJECT	SHEET No	TOTAL SHEETS
8	SBd	10	33.3/R36.9		

REGISTERED CIVIL ENGINEER DATE

PLANS APPROVAL DATE

REGISTERED PROFESSIONAL ENGINEER MOHAMMED ATIQULLAH No. C47027 Exp. 12/31/09 CIVIL STATE OF CALIFORNIA

The State of California or its officers or agents shall not be responsible for the accuracy or completeness of electronic copies of this plan sheet.

SANBAG
1170 WEST 3RD STREET, 2ND FLOOR
SAN BERNARDINO, CA 92410

CH2M HILL
2280 MARKET STREET, SUITE 200
RIVERSIDE, CA 92501

NOTE:

1. All dimensions are measured along RWLOL.

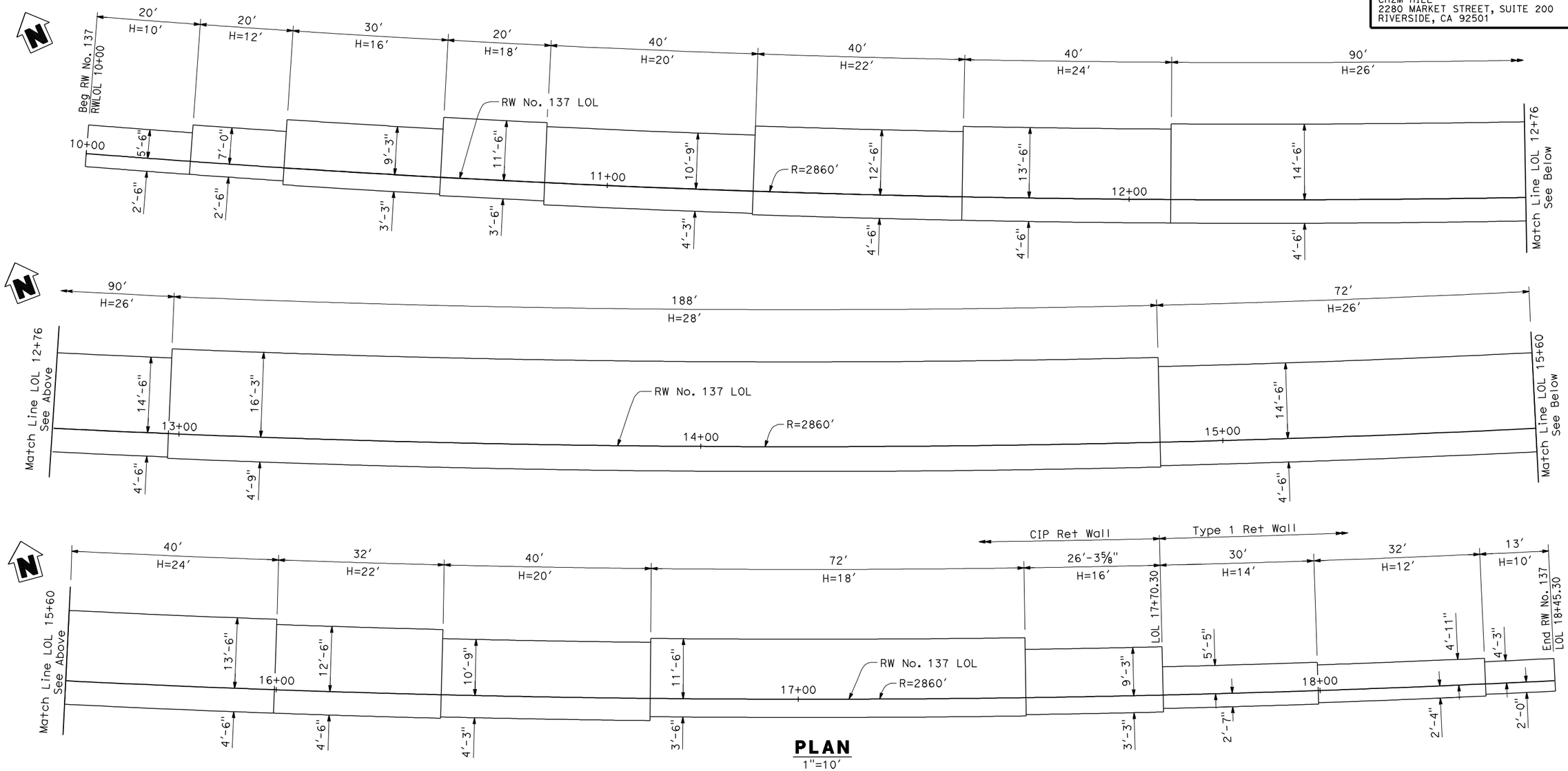

PLAN
1″=10′

INITIAL PS&E

Robert Zezoff DESIGN OVERSIGHT		DESIGN	BY W. Atiqullah / E. Coates	CHECKED A. Issa	PREPARED FOR THE STATE OF CALIFORNIA DEPARTMENT OF TRANSPORTATION
SIGN OFF DATE		DETAILS	BY E. Coates	CHECKED M. Atiqullah	
		QUANTITIES	BY E. Coates	CHECKED A. Issa	

Mohammed Atiqullah
PROJECT ENGINEER

BRIDGE NO.

POST MILE 34.93

RETAINING WALL NO. 137
FOUNDATION LAYOUT

DESIGN DETAIL SHEET (ENGLISH) (REV. 2/25/05)

ORIGINAL SCALE IN INCHES FOR REDUCED PLANS 0 1 2 3

CU 08220
EA 0F1500

DISREGARD PRINTS BEARING EARLIER REVISION DATES

REVISION DATES (PRELIMINARY STAGE ONLY) 06/24/09

SHEET 3 OF 12

FILE => 10E-xxxx-b-fdpl01.dgn

USERNAME => nmorales DATE PLOTTED => 24-JUN-2009 TIME PLOTTED => 15:15

DIST	COUNTY	ROUTE	POST MILES TOTAL PROJECT	SHEET No	TOTAL SHEETS
8	SBd	10	33.3/R36.9		

REGISTERED CIVIL ENGINEER DATE

PLANS APPROVAL DATE

REGISTERED PROFESSIONAL ENGINEER MOHAMMED ATIQULLAH No. C47027 Exp. 12/31/09 CIVIL STATE OF CALIFORNIA

The State of California or its officers or agents shall not be responsible for the accuracy or completeness of electronic copies of this plan sheet.

SANBAG
1170 WEST 3RD STREET, 2ND FLOOR
SAN BERNARDINO, CA 92410

CH2M HILL
2280 MARKET STREET, SUITE 200
RIVERSIDE, CA 92501

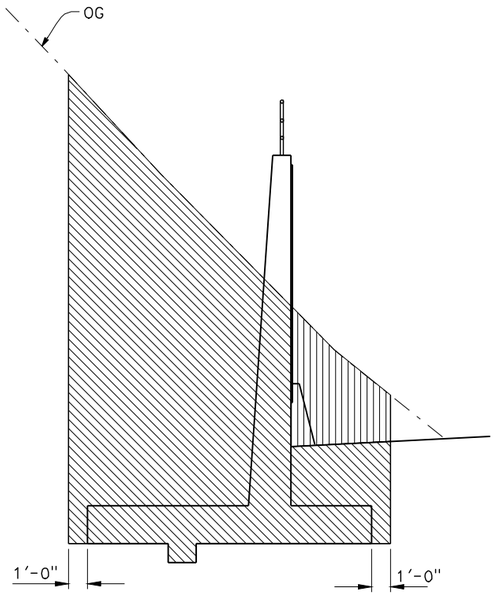

STRUCTURAL EXCAVATION

No Scale
Sta 10+00 to 17+70.30

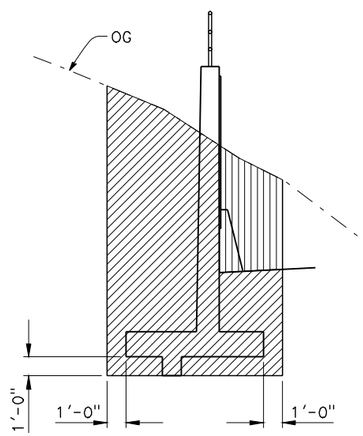

STRUCTURAL EXCAVATION

No Scale
Sta 17+70.30 To 18+45.30

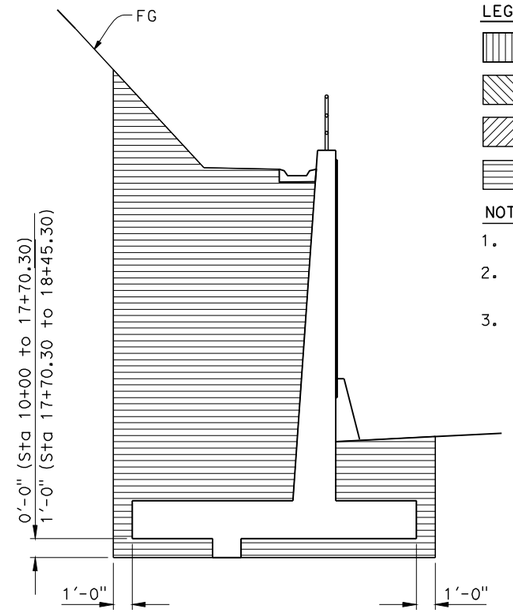

STRUCTURAL BACKFILL

No Scale

LEGEND

- Roadway Excavation
- Structure Excavation (Rock)
- Structure Excavation
- Structure Backfill (Low Expansion)

NOTES:

1. Apply Anti-Graffiti Coating.
2. Low expansion material shall be EI<50.
3. Expansion Index to be determined by ASTM D1557.

RETAINING WALL ELEVATIONS

RW LOL Sta	TOP OF WALL Elev	RW LOL Sta	TOP OF WALL Elev
10+00	1967.83	14+30	2007.47
10+10	1969.56	14+40	2007.90
10+20	1971.29	14+50	2008.31
10+30	1972.96	14+60	2008.69
10+40	1974.55	14+70	2009.06
10+50	1976.07	14+80	2009.41
10+60	1977.52	14+90	2009.74
10+70	1978.90	15+00	2010.05
10+80	1980.20	15+10	2010.34
10+90	1981.43	15+20	2010.61
11+00	1982.59	15+30	2010.87
11+10	1983.68	15+40	2011.10
11+20	1984.70	15+50	2011.31
11+30	1985.72	15+60	2011.51
11+40	1986.72	15+70	2011.68
11+50	1987.71	15+80	2011.84
11+60	1988.67	15+90	2011.98
11+70	1989.62	16+00	2012.09
11+80	1990.55	16+10	2012.19
11+90	1991.46	16+20	2012.27
12+00	1992.35	16+30	2012.33
12+10	1993.22	16+40	2012.38
12+20	1994.07	16+50	2012.43
12+30	1994.90	16+60	2012.48
12+40	1995.71	16+70	2012.53
12+50	1996.50	16+80	2012.58
12+60	1997.28	16+90	2012.63
12+70	1998.03	17+00	2012.68
12+80	1998.77	17+10	2012.73
12+90	1998.48	17+20	2012.78
13+00	2000.18	17+30	2012.83
13+10	2000.85	17+40	2012.88
13+20	2001.51	17+50	2012.93
13+30	2002.15	17+60	2012.98
13+40	2002.77	17+70	2013.03
13+50	2003.37	17+80	2013.08
13+60	2003.95	17+90	2013.13
13+70	2004.51	18+00	2013.18
13+80	2005.05	18+10	2013.23
13+90	2005.58	18+20	2013.28
14+00	2006.08	18+30	2013.33
14+10	2006.56	18+40	2013.38
14+20	2007.03	18+45.3	2013.41

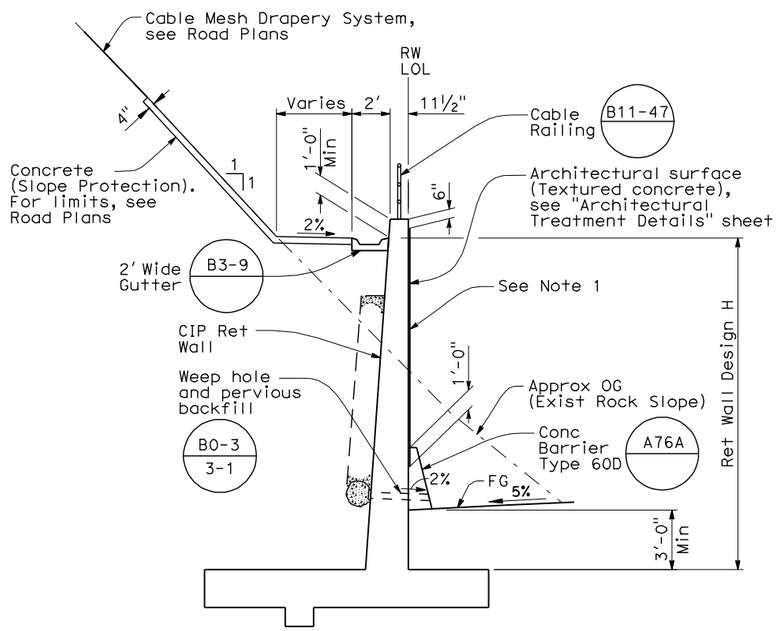

TYPICAL SECTION

¼" = 1'-0"
Sta 10+00 to 17+70.30

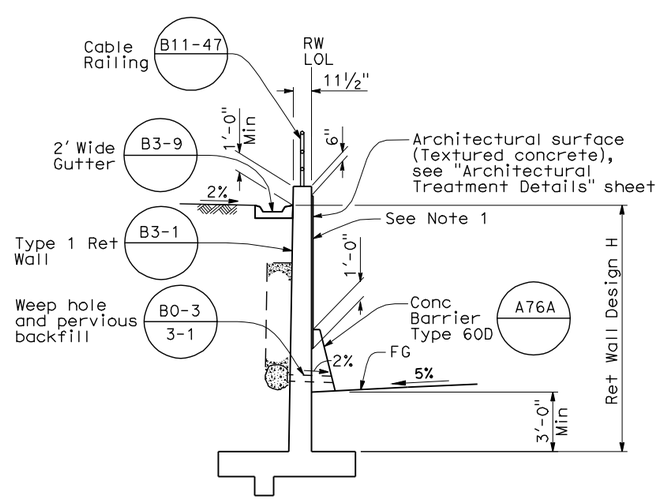

TYPICAL SECTION

¼" = 1'-0"
Sta 17+70.30 To 18+45.30

INITIAL PS&E

Robert Zezoff, DESIGN OVERSIGHT	DESIGN	BY M. Atiqullah / E. Coates	CHECKED A. Issa
SIGN OFF DATE	DETAILS	BY E. Coates	CHECKED M. Atiqullah
	QUANTITIES	BY E. Coates	CHECKED A. Issa

PREPARED FOR THE STATE OF CALIFORNIA DEPARTMENT OF TRANSPORTATION

Mohammed Atiqullah, PROJECT ENGINEER

BRIDGE NO.

POST MILE 34.93

RETAINING WALL NO. 137
TYPICAL SECTIONS

DESIGN DETAIL SHEET (ENGLISH) (REV. 2/25/05)

ORIGINAL SCALE IN INCHES FOR REDUCED PLANS 0 1 2 3

CU 08220
EA 0F1500

DISREGARD PRINTS BEARING EARLIER REVISION DATES

REVISION DATES (PRELIMINARY STAGE ONLY) 06/24/09

SHEET 4 OF 12

FILE => 10E-xxxx-a-rwts01.dgn

USERNAME => nmorales DATE PLOTTED => 24-JUN-2009 TIME PLOTTED => 16:02

DIST	COUNTY	ROUTE	POST MILES TOTAL PROJECT	SHEET No	TOTAL SHEETS
8	SBd	10	33.3/R36.9		

REGISTERED CIVIL ENGINEER DATE

PLANS APPROVAL DATE

REGISTERED PROFESSIONAL ENGINEER MOHAMMED ATIQULLAH No. C47027 Exp. 12/31/09 CIVIL STATE OF CALIFORNIA

The State of California or its officers or agents shall not be responsible for the accuracy or completeness of electronic copies of this plan sheet.

SANBAG
1170 WEST 3RD STREET, 2ND FLOOR
SAN BERNARDINO, CA 92410

CH2M HILL
2280 MARKET STREET, SUITE 200
RIVERSIDE, CA 92501

DESIGN DATA

DESIGN: Load Factor Design (LFD)

CONCRETE: Reinforced Concrete, f'c = 3600 psi
fy = 60,000 psi

LOADING CASE:
Case 1: Level ground with 0 psf surcharge

Seismic Load = 0 Dead Load
Wind Load = 33 psf

SEISMIC LOAD: SOIL
Kh = 0.0g
Kv = 0.0
Kae : Mononobe-Okabe Method

SOIL: Ø = 34° γ = 140 pcf
Equivalent fluid pressure:
= 74 pcf for determination of toe pressure
= 56 pcf for determination of heel pressure

EXTERNAL STABILITY:
Group 1 : D + E + SC
Group 2 : D + E + SC + W
Group 3 : D + PYM

INTERNAL STABILITY (LFD):
Group A : βD + 1.7E + 1.7SC
Group B : βD + 1.7E + 1.3W
Group C : D + PYM

Where : β = 1.0 or 1.3 whichever controls design
D = Dead Load
E = Lateral Earth Pressure
SC = Surcharge
W = Wind load
PYM = Probable Yield Moment (1.3 x Nominal Yield Moment of Stem)

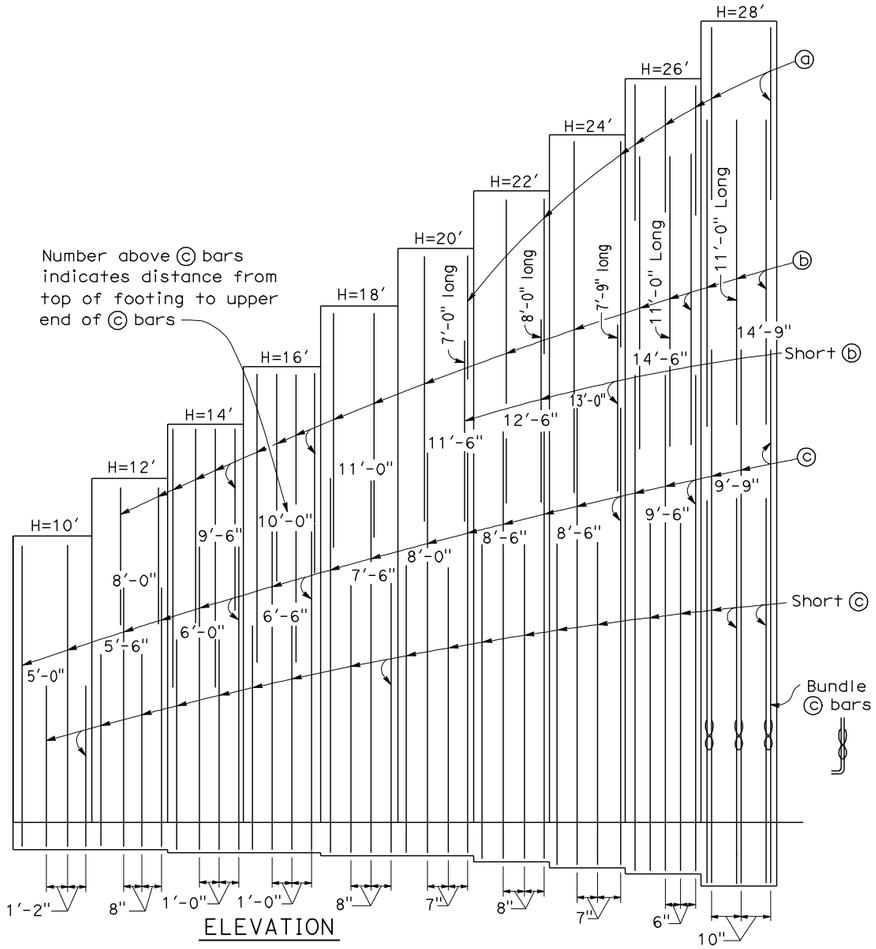

ELEVATION

TABLE OF REINFORCING STEEL DIMENSIONS AND DATA										
Design H	10′	12′	14′	16′	18′	20′	22′	24′	26′	28′
W	8′-0"	9′-6"	11′-0"	12′-6"	15′-0"	15′-0"	17′-0"	18′-0"	19′-0"	21′-0"
C	2′-6"	2′-6"	3′-0"	3′-3"	3′-6"	4′-3"	4′-6"	4′-6"	4′-6"	4′-9"
B	5′-6"	7′-0"	8′-0"	9′-3"	11′-6"	10′-9"	12′-6"	13′-6"	14′-6"	16′-3"
F	1′-4"	1′-4"	1′-6"	1′-9"	2′-0"	2′-0"	2′-0"	2′-6"	2′-9"	3′-0"
Batter	1/2:12	1/2:12	3/4:12	3/4:12	3/4:12	3/4:12	3/4:12	3/4:12	3/4:12	3/4:12
ⓐ bars	-	-	-	-	-	#5 @ 28	#5 @ 32	#5 @ 28	#5 @ 12	#5 @ 20
ⓑ bars	-	#5 @ 16	#5 @ 12	#5 @ 12	#6 @ 16	#8 @ 14	#8 @ 16	#8 @ 14	#8 @ 12	#8 @ 10
ⓒ bars	#6 @ 14	#6 @ 8	#8 @ 12	#9 @ 12	#9 @ 8	#9 @ 7	#11 @ 8	#11 @ 7	#11 @ 6	#11 @ 10 ⧖
ⓓ bars	#5 @ 14	#5 @ 8	#8 @ 12	#9 @ 12	#9 @ 8	#9 @ 7	#11 @ 8	#11 @ 7	#11 @ 6	#11 @ 10 ⧖
S	-	-	-	-	-	6′-8"	11′-0"	16′-0"	19′-6"	21′-0"
Ultimate Bearing Capacity Req'd k/sf	6.2	9.4	11.5	10.0	10.3	16.3	17.8	19.0	22.2	19.2

⧖ Denotes a bundle of 2 bars

NOTES:
1. For details not shown and drainage notes see B3-8
2. For wall stem joint details see B0-3/3-3 and B0-3/3-4

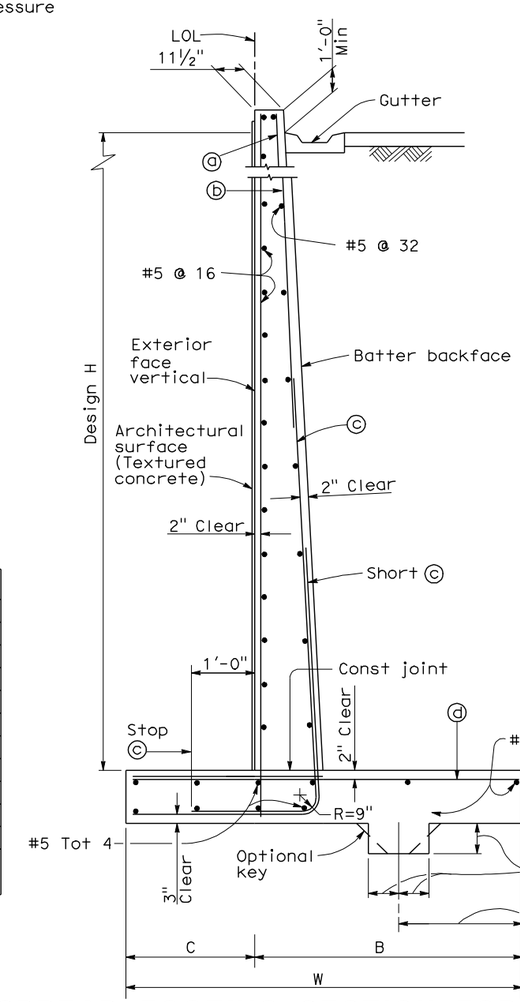

SPREAD FOOTING SECTION FOR H ≤ 18'

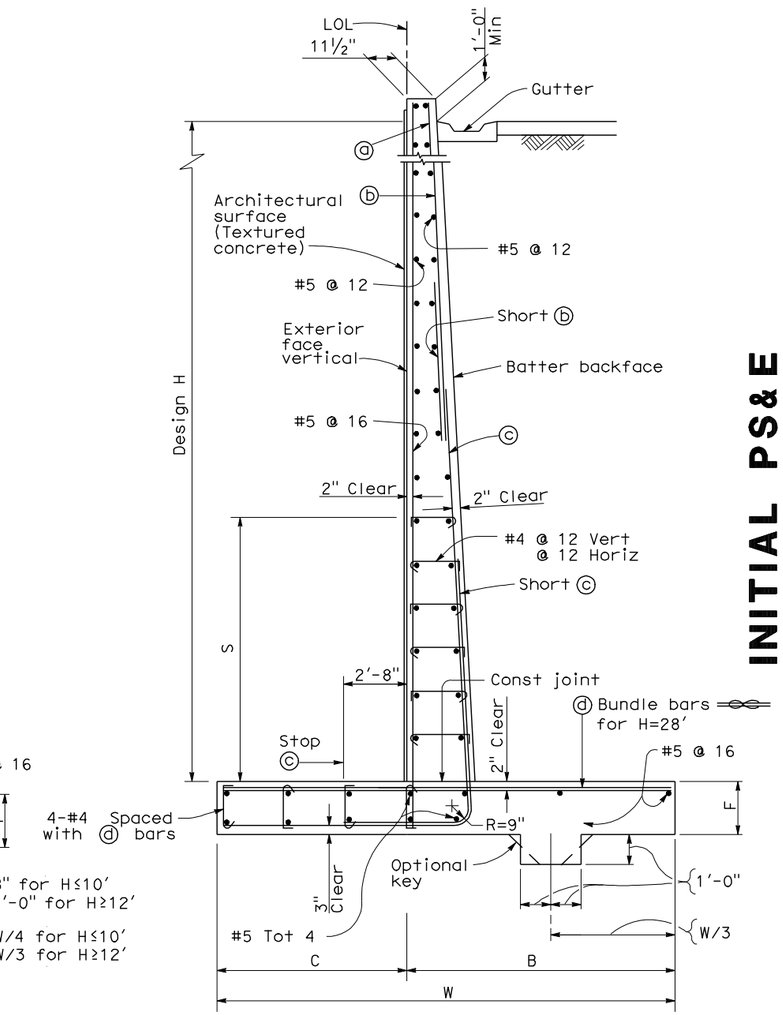

SPREAD FOOTING SECTION FOR H > 18'

INITIAL PS&E

Robert Zezoff DESIGN OVERSIGHT	DESIGN	BY M. Atiqullah / E. Coates	CHECKED A. Issa	PREPARED FOR THE STATE OF CALIFORNIA DEPARTMENT OF TRANSPORTATION	Mohammed Atiqullah PROJECT ENGINEER
SIGN OFF DATE	DETAILS	BY E. Coates	CHECKED M. Atiqullah		
	QUANTITIES	BY E. Coates	CHECKED A. Issa		

BRIDGE NO.
POST MILE 34.93

RETAINING WALL NO. 137
RETAINING WALL DETAILS

DESIGN DETAIL SHEET (ENGLISH) (REV. 2/25/05)

ORIGINAL SCALE IN INCHES FOR REDUCED PLANS 0 1 2 3

CU 08220
EA 0F1500

DISREGARD PRINTS BEARING EARLIER REVISION DATES

REVISION DATES (PRELIMINARY STAGE ONLY) 06/24/09

SHEET 5 OF 12

FILE => 10E-xxxx-g-rwdt01.dgn

USERNAME => nmorales DATE PLOTTED => 24-JUN-2009 TIME PLOTTED => 15:15

DIST	COUNTY	ROUTE	POST MILES TOTAL PROJECT	SHEET No	TOTAL SHEETS
8	SBd	10	33.3/R36.9		

REGISTERED CIVIL ENGINEER DATE

PLANS APPROVAL DATE

REGISTERED PROFESSIONAL ENGINEER MOHAMMED ATIQULLAH No. C47027 Exp. 12/31/09 CIVIL STATE OF CALIFORNIA

The State of California or its officers or agents shall not be responsible for the accuracy or completeness of electronic copies of this plan sheet.

SANBAG
1170 WEST 3RD STREET, 2ND FLOOR
SAN BERNARDINO, CA 92410

CH2M HILL
2280 MARKET STREET, SUITE 200
RIVERSIDE, CA 92501

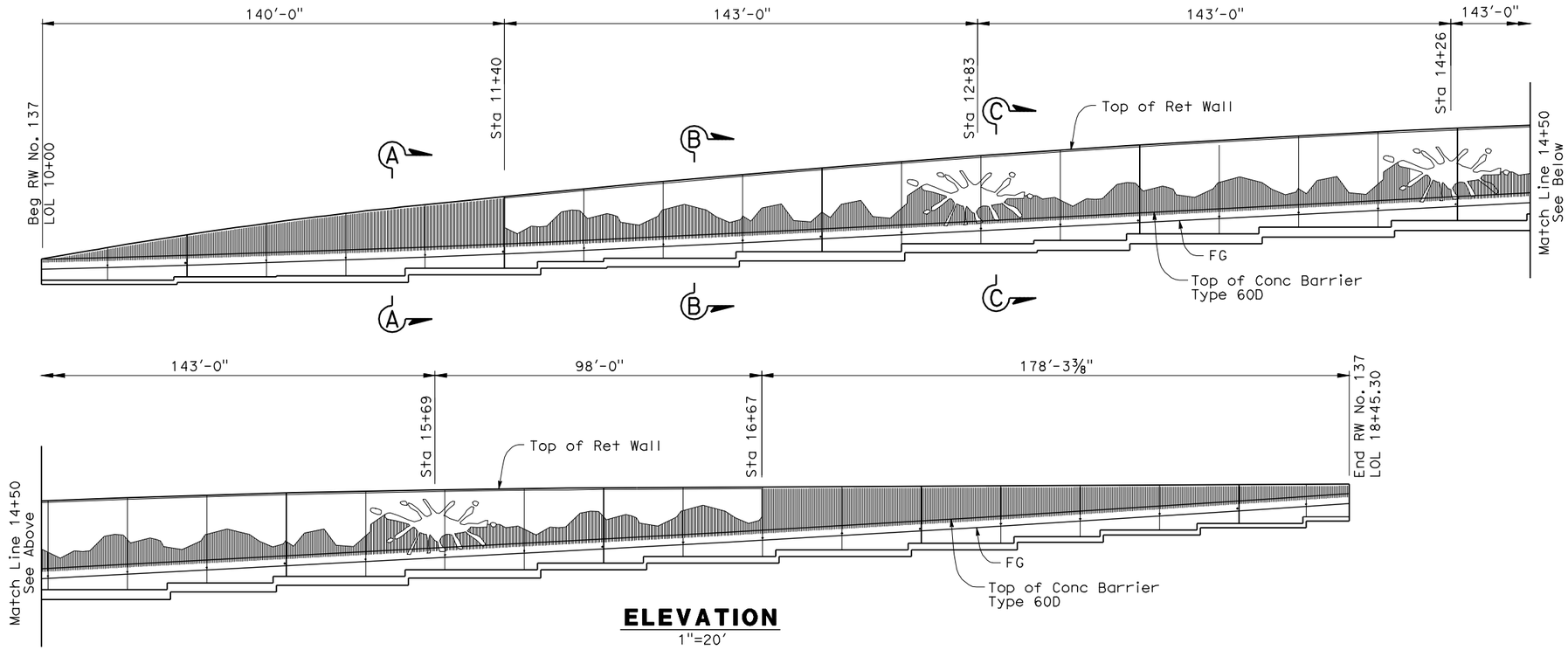

ELEVATION
1"=20'

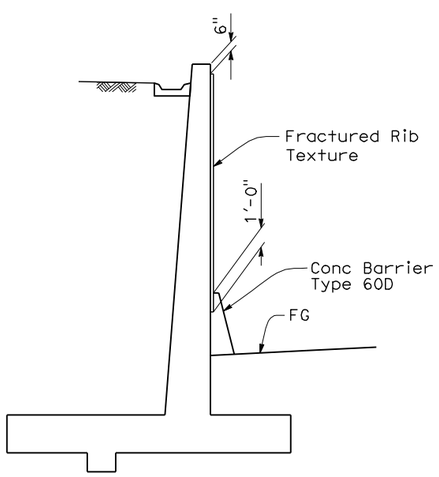

SECTION A-A
No Scale

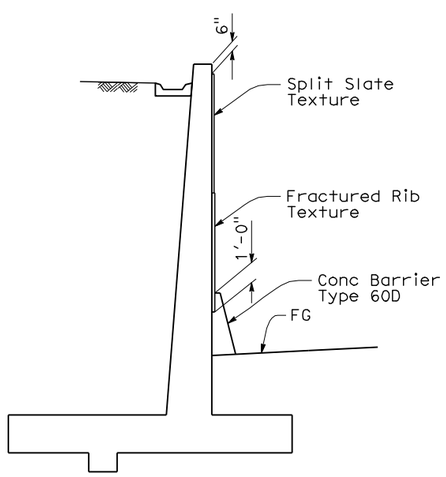

SECTION B-B
No Scale

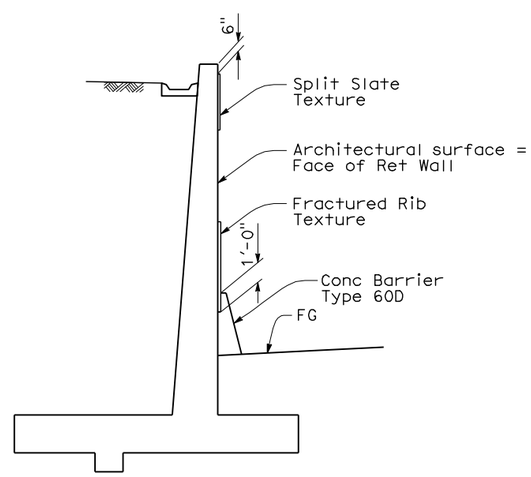

SECTION C-C
No Scale

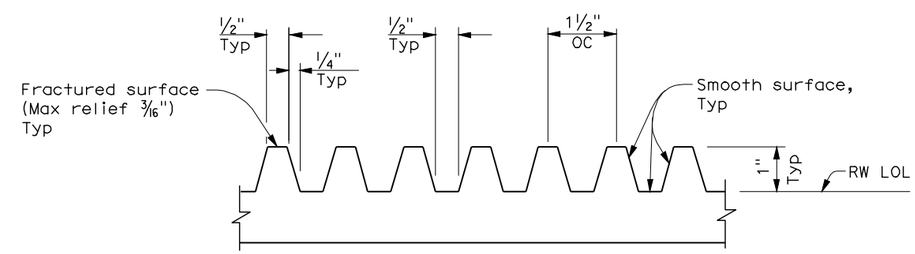

FRACTURED RIB TEXTURE
No Scale

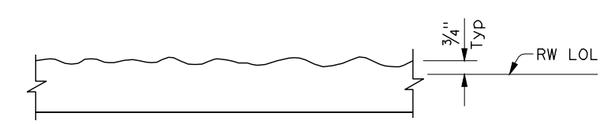

SPLIT SLATE TEXTURE
No Scale

INITIAL PS&E

Robert Zezoff
DESIGN OVERSIGHT

SIGN OFF DATE

DESIGN DETAIL SHEET (ENGLISH) (REV. 2/25/05)

	BY	CHECKED
DESIGN	M. Atiqullah / E. Coates	A. Issa
DETAILS	E. Coates	M. Atiqullah
QUANTITIES	E. Coates	A. Issa

ORIGINAL SCALE IN INCHES FOR REDUCED PLANS 0 1 2 3

PREPARED FOR THE STATE OF CALIFORNIA DEPARTMENT OF TRANSPORTATION

Mohammed Atiqullah
PROJECT ENGINEER

CU 08220
EA 0F1500

BRIDGE NO.

POST MILE 34.93

RETAINING WALL NO. 137
ARCHITECTURAL TREATMENT DETAILS

DISREGARD PRINTS BEARING EARLIER REVISION DATES

REVISION DATES (PRELIMINARY STAGE ONLY) 06/24/09

SHEET 6 OF 12

FILE => 10E-xxxx-x-arcdt01.dgn

USERNAME => nmorales DATE PLOTTED => 24-JUN-2009 TIME PLOTTED => 16:02

DIST	COUNTY	ROUTE	POST MILES TOTAL PROJECT	SHEET No	TOTAL SHEETS
8	SBd	10	33.3/R36.9		

REGISTERED CIVIL ENGINEER DATE

PLANS APPROVAL DATE

REGISTERED PROFESSIONAL ENGINEER CRAIG P. LESZKIEWICZ No. 67419 Exp. 12/31/2010 CIVIL STATE OF CALIFORNIA

The State of California or its officers or agents shall not be responsible for the accuracy or completeness of electronic copies of this plan sheet.

SANBAG
1170 WEST 3RD STREET, 2ND FLOOR
SAN BERNARDINO, CA 92410

CH2M HILL
2280 MARKET STREET, SUITE 200
RIVERSIDE, CA 92501

Notes:

1. This LOTB sheet was prepared in accordance with the Caltrans Soil & Rock Logging, Classification, and Presentation Manual.
2. 2.5" diameter rock samples were taken using an HQ diamond core barrel sampler.
3. .38" and 2.36" diameter samples were taken alternately using a split-spoon sampler and a modified California split barrel sampler, respectively. The California modified split barrel sampler has an inside diameter (I.D.) of 2.36" and the outside diameter (O.D.) of 3.00". The split-spoon sampler has an I.D. of 1.38" and an outside diameter of 2.00".

   An automatic trip hammer system was used to advance the drive and SPT samplers.

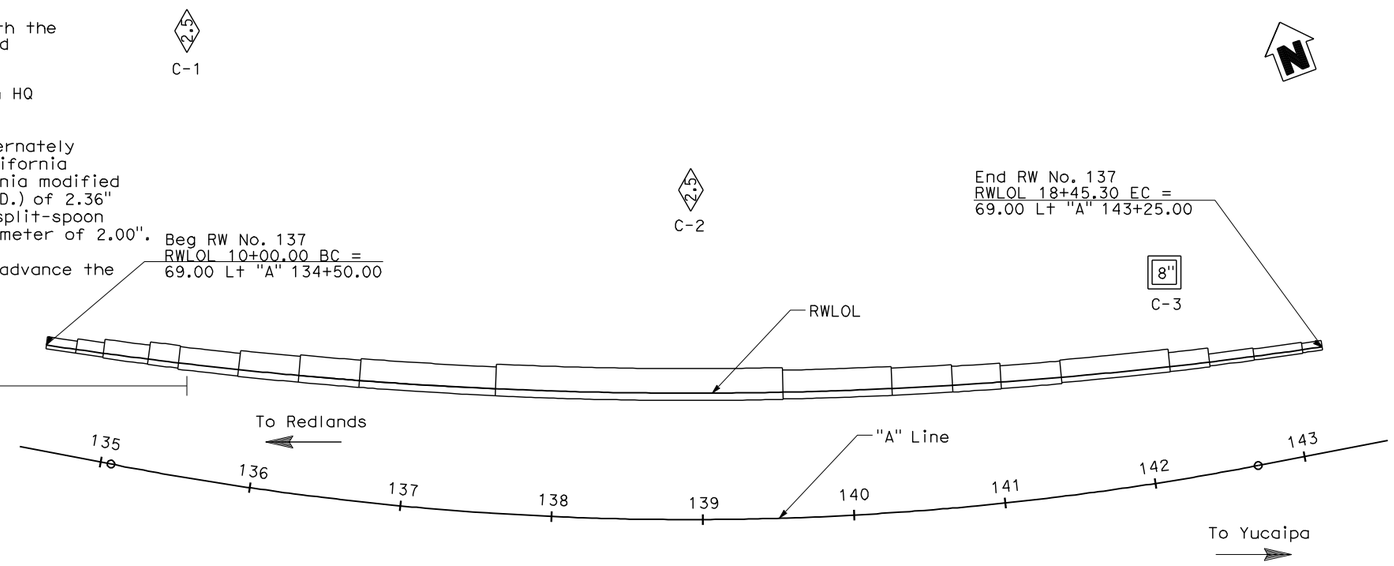

PLAN
1"=50'

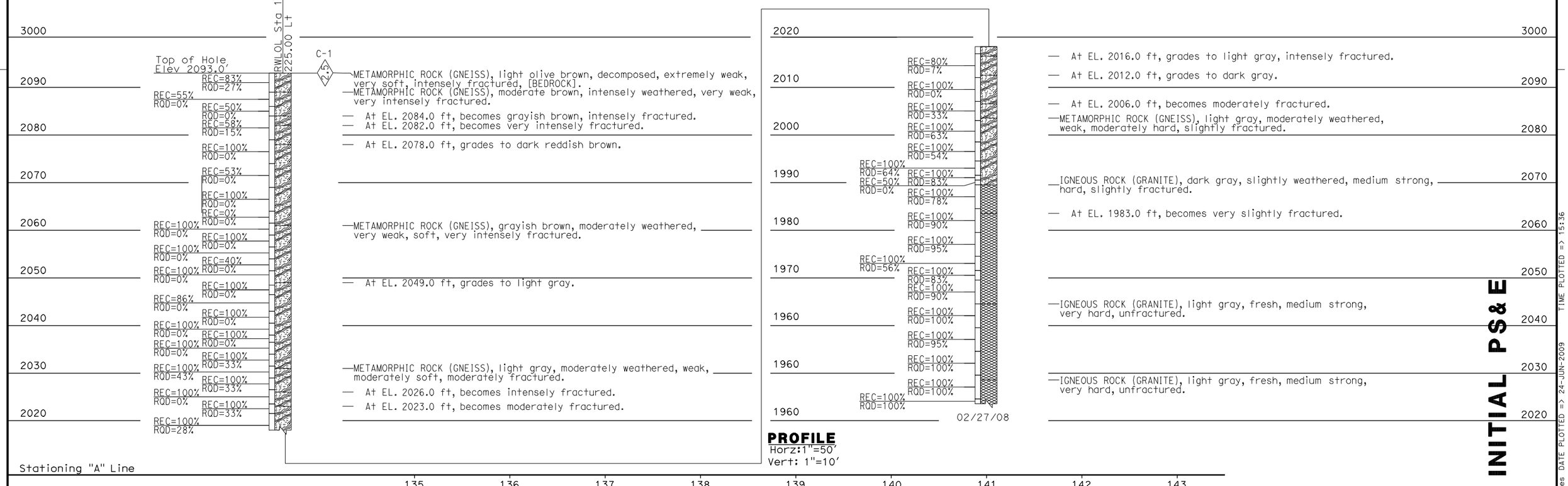

PROFILE
Horz:1"=50'
Vert: 1"=10'

INITIAL PS&E

TIME PLOTTED => 15:36
DATE PLOTTED => 24-JUN-2009
USERNAME => nmorales

Robert Zezoff DESIGN OVERSIGHT	DRAWN BY	A. Gorden	C. Leszkiewcz FIELD INVESTIGATION BY:
SIGN OFF DATE	CHECKED BY		DATE 02/25/08

PREPARED FOR THE STATE OF CALIFORNIA DEPARTMENT OF TRANSPORTATION

Mohammed Atiqullah
PROJECT ENGINEER

BRIDGE NO.
POST MILES 34.93

RETAINING WALL No. 137

LOG OF TEST BORINGS SHEET 1 OF 6

ORIGINAL SCALE IN INCHES FOR REDUCED PLANS 0 1 2 3

CU 08220
EA 0F1500

DISREGARD PRINTS BEARING EARLIER REVISION DATES 06/24/09

REVISION DATES

SHEET 7 OF 12

FILE => 10E-xxxx-z-lotb01.dgn

DIST	COUNTY	ROUTE	POST MILES TOTAL PROJECT	SHEET No	TOTAL SHEETS
8	SBd	10	33.3/R36.9		

REGISTERED CIVIL ENGINEER DATE

PLANS APPROVAL DATE

REGISTERED PROFESSIONAL ENGINEER CRAIG P. LESZKIEWICZ No. 67419 Exp. 12/31/2010 CIVIL STATE OF CALIFORNIA

The State of California or its officers or agents shall not be responsible for the accuracy or completeness of electronic copies of this plan sheet.

SANBAG
1170 WEST 3RD STREET, 2ND FLOOR
SAN BERNARDINO, CA 92410

CH2M HILL
2280 MARKET STREET, SUITE 200
RIVERSIDE, CA 92501

Notes:

1. This LOTB sheet was prepared in accordance with the Caltrans Soil & Rock Logging, Classification, and Presentation Manual.
2. 2.5" diameter rock samples were taken using an HQ diamond core barrel sampler.
3. .38" and 2.36" diameter samples were taken alternately using a split-spoon sampler and a modified California split barrel sampler, respectively. The California modified split barrel sampler has an inside diameter (I.D.) of 2.36" and the outside diameter (O.D.) of 3.00". The split-spoon sampler has an I.D. of 1.38" and an outside diameter of 2.00".

   An automatic trip hammer system was used to advance the drive and SPT samplers.

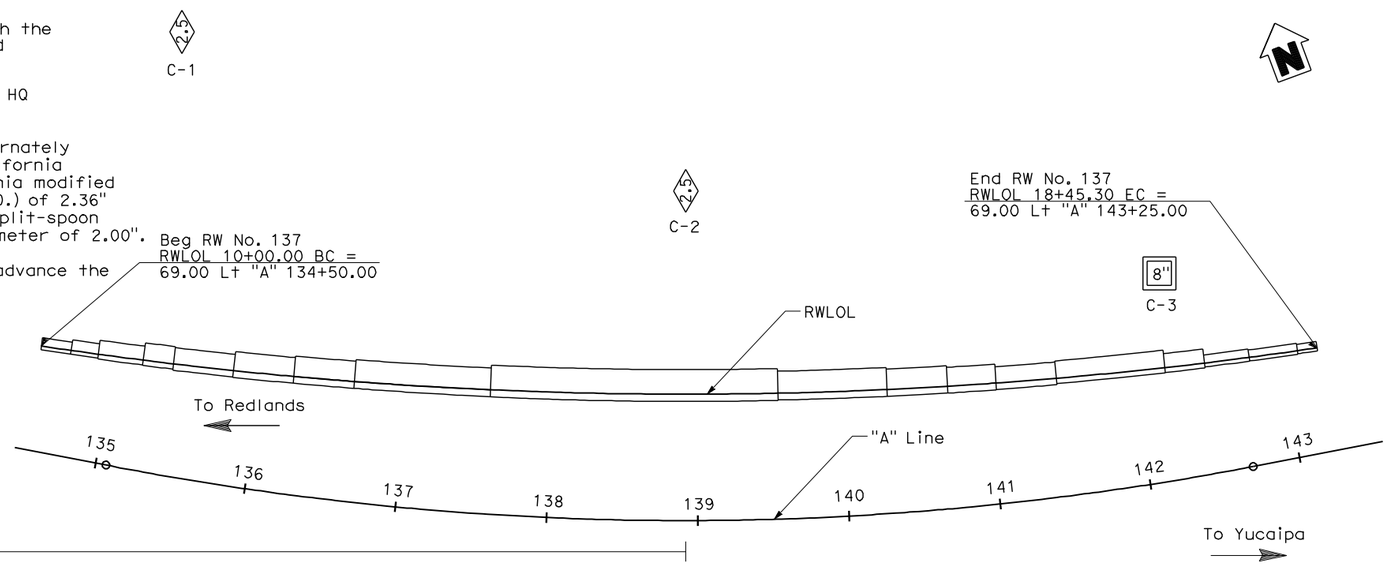

PLAN
1"=50'

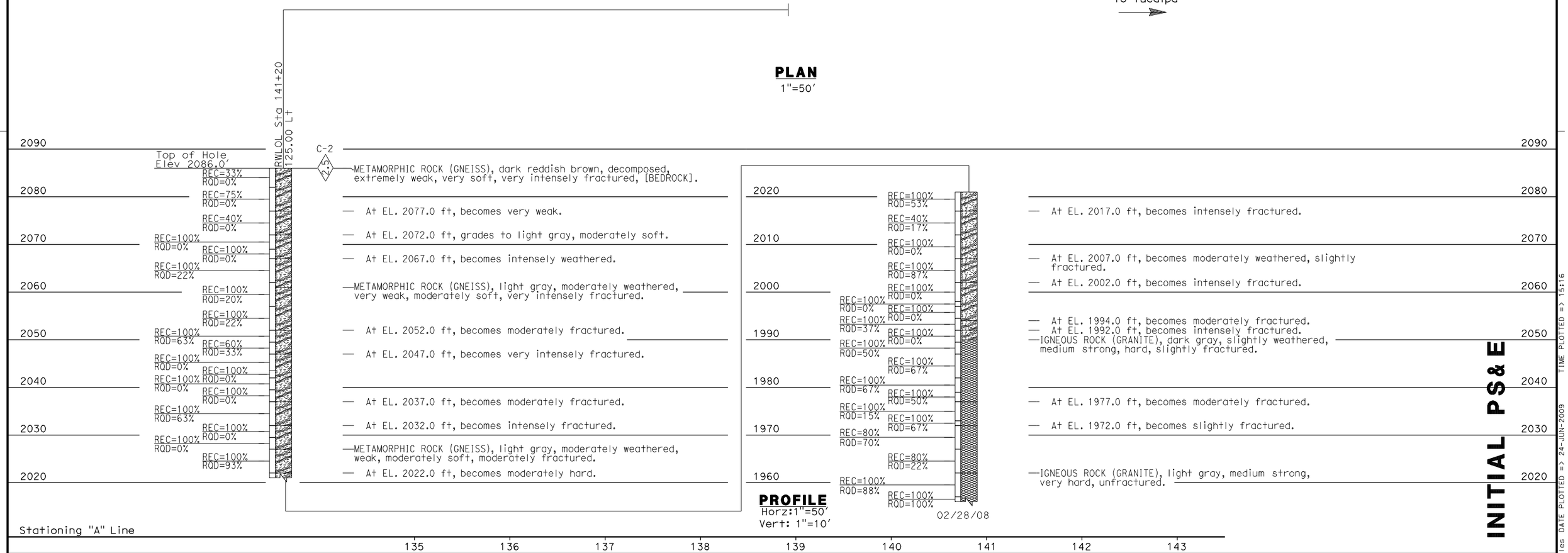

PROFILE
Horz:1"=50'
Vert: 1"=10'

INITIAL PS&E

Robert Zezoff DESIGN OVERSIGHT SIGN OFF DATE	DRAWN BY A. Gorden CHECKED BY	C. Leszkiewicz FIELD INVESTIGATION BY: DATE 02/25/08	PREPARED FOR THE STATE OF CALIFORNIA DEPARTMENT OF TRANSPORTATION
Mohammed Atiqullah PROJECT ENGINEER	BRIDGE NO. POST MILES 34.93	**RETAINING WALL No. 137** **LOG OF TEST BORINGS SHEET 2 OF 6**	

ORIGINAL SCALE IN INCHES FOR REDUCED PLANS 0 1 2 3

CU 08220
EA 0F1500

DISREGARD PRINTS BEARING EARLIER REVISION DATES 06/24/09

REVISION DATES | SHEET 8 | OF 12

FILE => 10E-xxxx-z-lotb02.dgn

USERNAME => nmorales DATE PLOTTED => 24-JUN-2009 TIME PLOTTED => 15:16

DIST	COUNTY	ROUTE	POST MILES TOTAL PROJECT	SHEET No	TOTAL SHEETS
8	SBd	10	33.3/R36.9		

REGISTERED CIVIL ENGINEER DATE

PLANS APPROVAL DATE

REGISTERED PROFESSIONAL ENGINEER CRAIG P. LESZKIEWICZ No. 67419 Exp. 12/31/2010 CIVIL STATE OF CALIFORNIA

The State of California or its officers or agents shall not be responsible for the accuracy or completeness of electronic copies of this plan sheet.

SANBAG
1170 WEST 3RD STREET, 2ND FLOOR
SAN BERNARDINO, CA 92410

CH2M HILL
2280 MARKET STREET, SUITE 200
RIVERSIDE, CA 92501

Notes:

1. This LOTB sheet was prepared in accordance with the Caltrans Soil & Rock Logging, Classification, and Presentation Manual.
2. 2.5" diameter rock samples were taken using an HQ diamond core barrel sampler.
3. .38" and 2.36" diameter samples were taken alternately using a split-spoon sampler and a modified California split barrel sampler, respectively. The California modified split barrel sampler has an inside diameter (I.D.) of 2.36" and the outside diameter (O.D.) of 3.00". The split-spoon sampler has an I.D. of 1.38" and an outside diameter of 2.00".

   An automatic trip hammer system was used to advance the drive and SPT samplers.

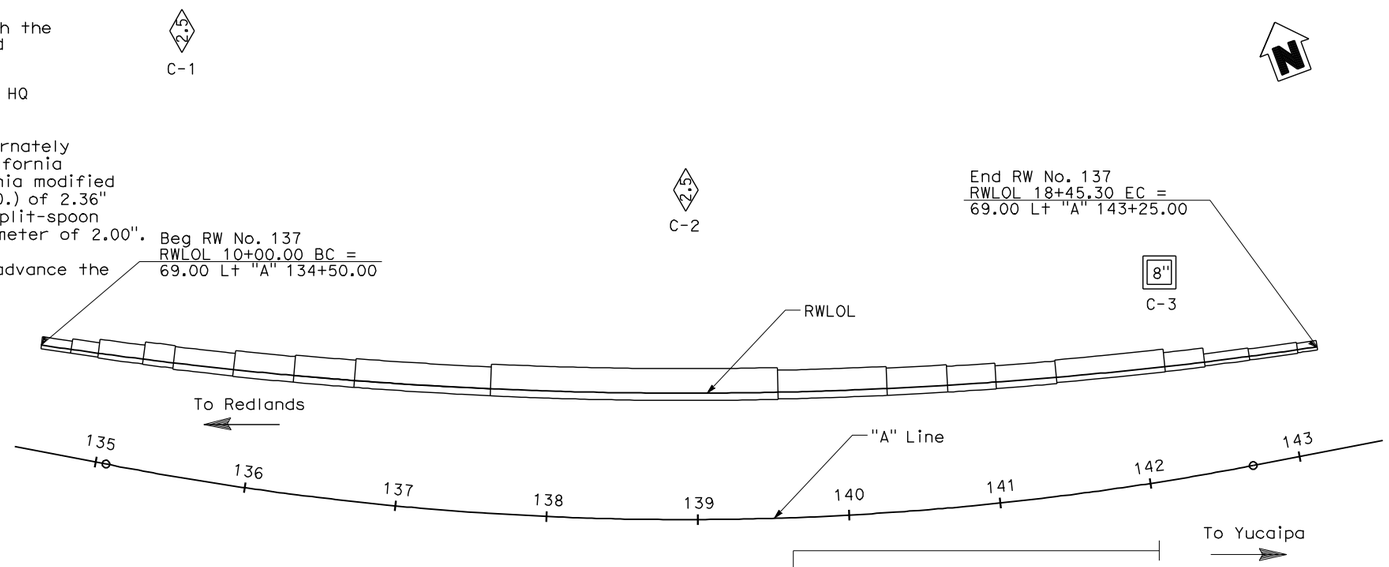

PLAN
1"=50'

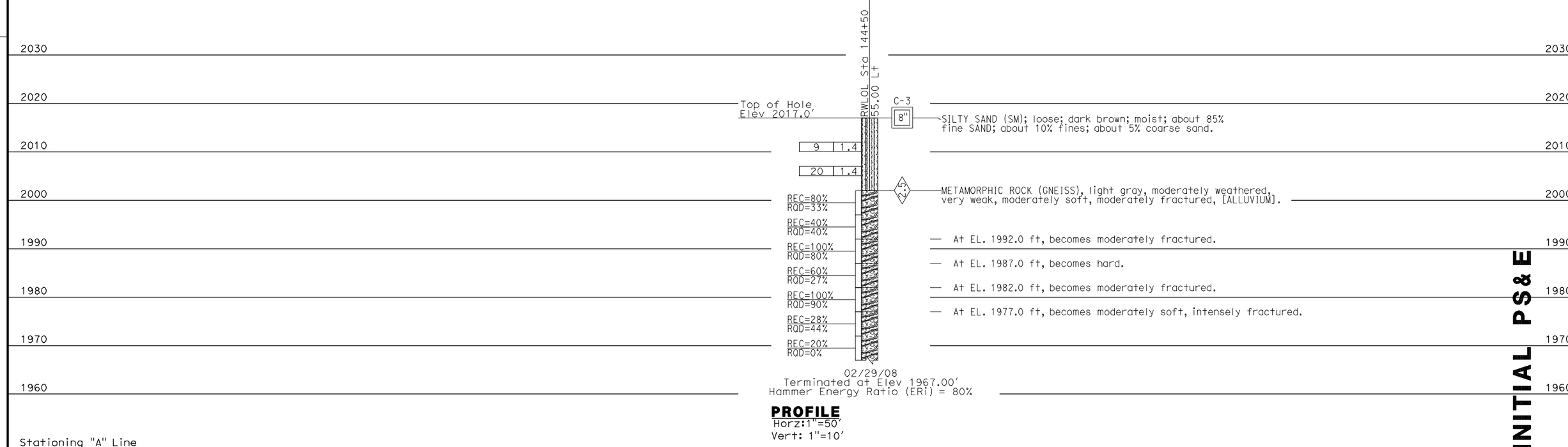

PROFILE
Horz:1"=50'
Vert: 1"=10'

INITIAL PS&E

Robert Zezoff DESIGN OVERSIGHT	DRAWN BY	A. Gorden	C. Leszkiewicz FIELD INVESTIGATION BY:	PREPARED FOR THE STATE OF CALIFORNIA DEPARTMENT OF TRANSPORTATION	Mohammed Atiqullah PROJECT ENGINEER
SIGN OFF DATE	CHECKED BY		DATE 02/25/08		

BRIDGE NO.

POST MILES 34.93

RETAINING WALL No. 137

LOG OF TEST BORINGS SHEET 3 OF 6

ORIGINAL SCALE IN INCHES FOR REDUCED PLANS 0 1 2 3

CU 08220
EA 0F1500

DISREGARD PRINTS BEARING EARLIER REVISION DATES 06/24/09

REVISION DATES

SHEET 9 OF 12

FILE => 10E-xxxx-z-lotb03.dgn

USERNAME => nmorales DATE PLOTTED => 24-JUN-2009 TIME PLOTTED => 15:16

REFERENCE: CALTRANS SOIL & ROCK LOGGING, CLASSIFICATION, AND PRESENTATION MANUAL (JUNE 2007)

DIST	COUNTY	ROUTE	POST MILES TOTAL PROJECT	SHEET No	TOTAL SHEETS
8	SBd	10	33.3/R36.9		

REGISTERED CIVIL ENGINEER DATE

PLANS APPROVAL DATE

REGISTERED PROFESSIONAL ENGINEER CRAIG P. LESZKIEWICZ No. 67419 Exp. 12/31/2010 CIVIL STATE OF CALIFORNIA

The State of California or its officers or agents shall not be responsible for the accuracy or completeness of electronic copies of this plan sheet.

SANBAG
1170 WEST 3RD STREET, 2ND FLOOR
SAN BERNARDINO, CA 92410

CH2M HILL
2280 MARKET STREET, SUITE 200
RIVERSIDE, CA 92501

PERCENT CORE RECOVERY (REC) & ROCK QUALITY DESIGNATION (RQD)

$$REC = \frac{\sum \text{Length of the recovered core pieces (inches)}}{\text{Total length of core run (inches)}} \times 100\%$$

An automatic trip hammer system was used to advance the drive and SPT samplers.

$$RQD = \frac{\sum \text{Length of intact core pieces} \geq 4''}{\text{Total length of core run (inches)}} \times 100\%$$

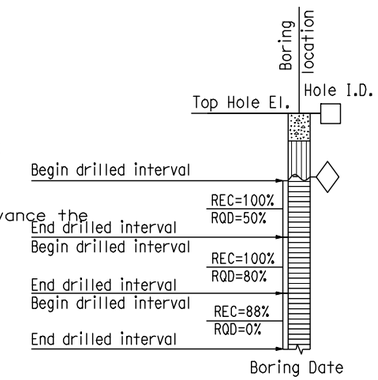

RELATIVE STRENGTH OF INTACT ROCK

Term	Uniaxial Compressive Strength (PSI)
Extremely Strong	> 30,000
Very Strong	14,500 - 30,000
Strong	7,000 - 14,500
Medium Strong	3,500 - 7,000
Weak	700 - 3,500
Very Weak	150 - 700
Extremely Weak	< 150

BEDDING SPACING

Description	Thickness / Spacing
Massive	Greater than 10 ft
Very thickly bedded	3 to 10 ft
Thickly bedded	1 to 3 ft
Moderately bedded	3-5/8" to 1 ft
Thinly bedded	1-1/4" to 3-5/8"
Very thinly bedded	3/8" to 1-1/4"
Laminated	Less than 3/8"

LEGEND OF ROCK MATERIALS

- IGNEOUS ROCK
- SEDIMENTARY ROCK
- METAMORPHIC ROCK

ROCK HARDNESS

Description	Criteria
Extremely Hard	Specimen cannot be scratched with a pocket knife or sharp pick; can only be chipped with repeated heavy hammer blows.
Very Hard	Specimen cannot be scratched with a pocket knife or sharp pick. Breaks with repeated heavy hammer blows.
Hard	Specimen can be scratched with a pocket knife or sharp pick with difficulty (heavy pressure). Heavy hammer blows required to break specimen.
Moderately Hard	Specimen can be scratched with pocket knife or sharp pick with light or moderate pressure. Core breaks with moderate hammer pressure.
Moderately Soft	Specimen can be grooved 1/6" deep with a pocket knife or sharp pick with moderate or heavy pressure. Breaks with light hammer blow or heavy manual pressure.
Soft	Specimen can be grooved or gouged easily by a pocket knife or sharp pick with light pressure, can be scratched with fingernail. Breaks with light to moderate manual pressure.
Very Soft	Specimen can be readily indented, grooved or gouged with fingernail, or carved with a pocket knife. Breaks with light manual pressure.

FRACTURE DENSITY

Description	Observed Fracture Density
Unfractured	No fractures.
Very slightly fractured	Lengths greater than 3 feet.
Slightly fractured	Lengths from 1 to 3 feet with few lengths less than 1 foot or greater than 3 feet.
Moderately fractured	Lengths mostly in 4" to 1 foot range with most lengths about 8"
Intensely fractured	Lengths average from 1 to 4" with scattered fragmented intervals with lengths less than 4"
Very intensely fractured	Mostly chips and fragments with a few scattered short core lengths.

Combination descriptors (such as "Very intensely to intensely fractured") are used where equal distribution of both fracture density characteristics is present over a significant interval or exposure, or where characteristics are "in between" the descriptor definitions. Only two adjacent descriptors may be combined.

WEATHERING DESCRIPTORS FOR INTACT ROCK

Description	Diagnostic features					General Characteristics
	Chemical Weathering-Discoloration and/or oxidation		Mechanical Weathering-Grain boundary conditions (disaggregation) primarily for granitics and some coarse-grained sediments	Texture and Solutioning		
	Body of Rock	Fracture Surfaces		Texture	Solutioning	
Fresh	No discoloration, not oxidized.	No discoloration or oxidation.	No separation, intact (tight).	No change.	No solutioning.	Hammer rings when crystalline rocks are struck.
Slightly Weathered	Discoloration or oxidation is limited to surface of, or short distance from, fractures; some feldspar crystals are dull.	Minor to complete discoloration or oxidation of most surfaces.	No visible separation, intact (tight).	Preserved.	Minor leaching of some soluble minerals may be noted.	Hammer rings when crystalline rocks are struck. Body of rock not weakened.
Moderately Weathered	Discoloration or oxidation extends from fractures usually throughout; Fe-Mg minerals are "rusty," feldspar crystals are "cloudy."	All fracture surfaces are discolored or oxidized.	Partial separation of boundaries visible.	Generally preserved.	Soluble minerals may be mostly leached.	Hammer does not ring when rock is struck. Body of rock is slightly weakened.
Intensely Weathered	Discoloration or oxidation throughout; all feldspars and Fe-Mg minerals are altered to clay to some extent; or chemical alteration produces in-situ disaggregation, see grain boundary conditions.	All fracture surfaces are discolored or oxidized, surfaces friable.	Partial separation, rock is friable; in semiarid conditions granitics are disaggregated.	Texture altered by chemical disintegration (hydration, argillation).	Leaching of soluble minerals may be complete.	Dull sound when struck with hammer, usually can be broken with moderate to heavy manual pressure or by light hammer blow without reference to planes of weakness such as incipient or hairline fractures, or veinlets. Rock is significantly weakened.
Decomposed	Discolored or oxidized throughout, but resistant minerals such as quartz may be unaltered; all feldspars and Fe-Mg minerals are completely altered to clay.		Complete separation of grain boundaries (disaggregated).	Resembles a soil, partial or complete remnant rock structure may be preserved; leaching of soluble minerals usually complete.		Can be granulated by hand. Resistant minerals such as quartz may be present as "stringers" or "dikes."

Combination descriptors (such as "slightly weathered to fresh") are permissible where equal distribution of both weathering characteristics is present over significant intervals or where characteristics present are "in between" the diagnostic feature. However, combination descriptors should not be used where significant, identifiable zones can be delineated. Only two adjacent descriptors may be combined. "Very intensely weathered" is the combination descriptor for "intensely weathered to decomposed."

INITIAL PS&E

Robert Zezoff
DESIGN OVERSIGHT

SIGN OFF DATE

DRAWN BY A. Gorden

CHECKED BY

C. Leszkiewicz
FIELD INVESTIGATION BY:

DATE 2/25/08

PREPARED FOR THE STATE OF CALIFORNIA DEPARTMENT OF TRANSPORTATION

Mohammed Atiqullah
PROJECT ENGINEER

BRIDGE NO.

POST MILES 34.93

RETAINING WALL No. 137

ROCK LEGEND

LOG OF TEST BORINGS SHEET 4 OF 6

ORIGINAL SCALE IN INCHES FOR REDUCED PLANS 0 1 2 3

CU 08220
EA 0F1500

DISREGARD PRINTS BEARING EARLIER REVISION DATES

REVISION DATES 06/24/09

SHEET 10 OF 12

FILE => 10E-xxxx-z-lotb04.dgn

USERNAME => nmorales DATE PLOTTED => 24-JUN-2009 TIME PLOTTED => 15:16

REFERENCE: CALTRANS SOIL & ROCK LOGGING, CLASSIFICATION, AND PRESENTATION MANUAL (JUNE 2007)

GROUP SYMBOLS AND NAMES

Graphic/Symbol	Group Names
GW	Well-graded GRAVEL Well-graded GRAVEL with SAND
GP	Poorly graded GRAVEL Poorly graded GRAVEL with SAND
GW-GM	Well-graded GRAVEL with SILT Well-graded GRAVEL with SILT and SAND
GW-GC	Well-graded GRAVEL with CLAY (or SILTY CLAY) Well-graded GRAVEL with CLAY and SAND (or SILTY CLAY and SAND)
GP-GM	Poorly graded GRAVEL with SILT Poorly graded GRAVEL with SILT and SAND
GP-GC	Poorly graded GRAVEL with CLAY (or SILTY CLAY) Poorly graded GRAVEL with CLAY and SAND (or SILTY CLAY and SAND)
GM	SILTY GRAVEL SILTY GRAVEL with SAND
GC	CLAYEY GRAVEL CLAYEY GRAVEL with SAND
GC-GM	SILTY, CLAYEY GRAVEL SILTY, CLAYEY GRAVEL with SAND
SW	Well-graded SAND Well-graded SAND with GRAVEL
SP	Poorly graded SAND Poorly graded SAND with GRAVEL
SW-SM	Well-graded SAND with SILT Well-graded SAND with SILT and GRAVEL
SW-SC	Well-graded SAND with CLAY (or SILTY CLAY) Well-graded SAND with CLAY and GRAVEL (or SILTY CLAY and GRAVEL)
SP-SM	Poorly graded SAND with SILT Poorly graded SAND with SILT and GRAVEL
SP-SC	Poorly graded SAND with CLAY (or SILTY CLAY) Poorly graded SAND with CLAY and GRAVEL (or SILTY CLAY and GRAVEL)
SM	SILTY SAND SILTY SAND with GRAVEL
SC	CLAYEY SAND CLAYEY SAND with GRAVEL
SC-SM	SILTY, CLAYEY SAND SILTY, CLAYEY SAND with GRAVEL
PT	PEAT
	COBBLES COBBLES and BOULDERS BOULDERS

Graphic/Symbol	Group Names
CL	Lean CLAY Lean CLAY with SAND Lean CLAY with GRAVEL SANDY lean CLAY SANDY lean CLAY with GRAVEL GRAVELLY lean CLAY GRAVELLY lean CLAY with SAND
CL-ML	SILTY CLAY SILTY CLAY with SAND SILTY CLAY with GRAVEL SANDY SILTY CLAY SANDY SILTY CLAY with GRAVEL GRAVELLY SILTY CLAY GRAVELLY SILTY CLAY with SAND
ML	SILT SILT with SAND SILT with GRAVEL SANDY SILT SANDY SILT with GRAVEL GRAVELLY SILT GRAVELLY SILT with SAND
OL	ORGANIC lean CLAY ORGANIC lean CLAY with SAND ORGANIC lean CLAY with GRAVEL SANDY ORGANIC lean CLAY SANDY ORGANIC lean CLAY with GRAVEL GRAVELLY ORGANIC lean CLAY GRAVELLY ORGANIC lean CLAY with SAND
OL	ORGANIC SILT ORGANIC SILT with SAND ORGANIC SILT with GRAVEL SANDY ORGANIC SILT SANDY ORGANIC SILT with GRAVEL GRAVELLY ORGANIC SILT GRAVELLY ORGANIC SILT with SAND
CH	Fat CLAY Fat CLAY with SAND Fat CLAY with GRAVEL SANDY fat CLAY SANDY fat CLAY with GRAVEL GRAVELLY fat CLAY GRAVELLY fat CLAY with SAND
MH	Elastic SILT Elastic SILT with SAND Elastic SILT with GRAVEL SANDY elastic SILT SANDY elastic SILT with GRAVEL GRAVELLY elastic SILT GRAVELLY elastic SILT with SAND
OH	ORGANIC fat CLAY ORGANIC fat CLAY with SAND ORGANIC fat CLAY with GRAVEL SANDY ORGANIC fat CLAY SANDY ORGANIC fat CLAY with GRAVEL GRAVELLY ORGANIC fat CLAY GRAVELLY ORGANIC fat CLAY with SAND
OH	ORGANIC elastic SILT ORGANIC elastic SILT with SAND ORGANIC elastic SILT with GRAVEL SANDY ORGANIC elastic SILT SANDY ORGANIC elastic SILT with GRAVEL GRAVELLY ORGANIC elastic SILT GRAVELLY ORGANIC elastic SILT with SAND
OL/OH	ORGANIC SOIL ORGANIC SOIL with SAND ORGANIC SOIL with GRAVEL SANDY ORGANIC SOIL SANDY ORGANIC SOIL with GRAVEL GRAVELLY ORGANIC SOIL GRAVELLY ORGANIC SOIL with SAND

FIELD AND LABORATORY TESTING

- (C) Consolidation (ASTM D 2435)
- (CL) Collapse Potential (ASTM D 5333)
- (CP) Compaction Curve (CTM 216)
- (CR) Corrosivity Testing (CTM 643, CTM 422, CTM 417)
- (CU) Consolidated Undrained Triaxial (ASTM D 4767)
- (DS) Direct Shear (ASTM D 3080)
- (EI) Expansion Index (ASTM D 4829)
- (M) Moisture Content (ASTM D 2216)
- (OC) Organic Content-% (ASTM D 2974)
- (P) Permeability (CTM 220)
- (PA) Particle Size Analysis (ASTM D 422)
- (PI) Plasticity Index (AASHTO T 90) Liquid Limit (AASHTO T 89)
- (PL) Point Load Index (ASTM D 5731)
- (PM) Pressure Meter
- (PP) Pocket Penetrometer
- (R) R-Value (CTM 301)
- (SE) Sand Equivalent (CTM 217)
- (SG) Specific Gravity (AASHTO T 100)
- (SL) Shrinkage Limit (ASTM D 427)
- (SW) Swell Potential (ASTM D 4546)
- (TV) Pocket Torvane
- (UC) Unconfined Compression-Soil (ASTM D 2166) Unconfined Compression-Rock (ASTM D 2938)
- (UU) Unconsolidated Undrained Triaxial (ASTM D 2850)
- (UW) Unit Weight (ASTM D 4767)
- (VS) Vane Shear (AASHTO T 223)

DIST	COUNTY	ROUTE	POST MILES TOTAL PROJECT	SHEET No	TOTAL SHEETS
8	SBd	10	33.3/R36.9		

REGISTERED CIVIL ENGINEER DATE

PLANS APPROVAL DATE

REGISTERED PROFESSIONAL ENGINEER CRAIG P. LESZKIEWICZ No. 67419 Exp. 12/31/2010 CIVIL STATE OF CALIFORNIA

The State of California or its officers or agents shall not be responsible for the accuracy or completeness of electronic copies of this plan sheet.

SANBAG
1170 WEST 3RD STREET, 2ND FLOOR
SAN BERNARDINO, CA 92410

CH2M HILL
2280 MARKET STREET, SUITE 200
RIVERSIDE, CA 92501

APPARENT DENSITY OF COHESIONLESS SOILS

Description	SPT N_{60} (Blows / 12 inches)
Very loose	0 - 4
Loose	5 - 10
Medium Dense	11 - 30
Dense	31 - 50
Very Dense	> 50

MOISTURE

Description	Criteria
Dry	Absence of moisture, dusty, dry to the touch
Moist	Damp but no visible water
Wet	Visible free water, usually soil is below water table

PERCENT OR PROPORTION OF SOILS

Description	Criteria
Trace	Particles are present but estimated to be less than 5%
Few	5 to 10%
Little	15 to 25%
Some	30 to 45%
Mostly	50 to 100%

PARTICLE SIZE

Description		Size
Boulder		> 12"
Cobble		3" to 12"
Gravel	Coarse	3/4" to 3"
	Fine	No. 4 to 3/4"
Sand	Coarse	No. 10 to No. 4
	Medium	No. 40 to No. 10
	Fine	No. 200 to No. 40

INITIAL PS&E

Robert Zezoff
DESIGN OVERSIGHT

SIGN OFF DATE

DRAWN BY A. Gorden

CHECKED BY

C. Leszkiewicz
FIELD INVESTIGATION BY:

DATE 2/25/08

ORIGINAL SCALE IN INCHES FOR REDUCED PLANS 0 1 2 3

PREPARED FOR THE STATE OF CALIFORNIA DEPARTMENT OF TRANSPORTATION

Mohammed Atiqullah
PROJECT ENGINEER

BRIDGE NO.

POST MILES 34.93

CU 08220
EA 0F1500

DISREGARD PRINTS BEARING EARLIER REVISION DATES

REVISION DATES 06/24/09

SHEET 11 OF 12

RETAINING WALL No. 137

SOIL LEGEND

LOG OF TEST BORINGS SHEET 5 OF 6

FILE => 10E-xxxx-z-lotb05.dgn

USERNAME => mmorales DATE PLOTTED => 24-JUN-2009 TIME PLOTTED => 15:16

REFERENCE: CALTRANS SOIL & ROCK LOGGING, CLASSIFICATION, AND PRESENTATION MANUAL (JUNE 2007)

DIST	COUNTY	ROUTE	POST MILES TOTAL PROJECT	SHEET No	TOTAL SHEETS
8	SBd	10	33.3/R36.9		

REGISTERED CIVIL ENGINEER DATE

PLANS APPROVAL DATE

REGISTERED PROFESSIONAL ENGINEER CRAIG P. LESZKIEWICZ No. 67419 Exp. 12/31/2010 CIVIL STATE OF CALIFORNIA

The State of California or its officers or agents shall not be responsible for the accuracy or completeness of electronic copies of this plan sheet.

SANBAG
1170 WEST 3RD STREET, 2ND FLOOR
SAN BERNARDINO, CA 92410

CH2M HILL
2280 MARKET STREET, SUITE 200
RIVERSIDE, CA 92501

CEMENTATION

Description	Criteria
Weak	Crumbles or breaks with handling or little finger pressure.
Moderate	Crumbles or breaks with considerable finger pressure.
Strong	Will not crumble or break with finger pressure.

CONSISTENCY OF COHESIVE SOILS

Description	Unconfined Compressive Strength (tsf)	Pocket Penetrometer Measurement (tsf)	Torvane Measurement (tsf)	Field Approximation
Very Soft	< 0.25	< 0.25	< 0.12	Easily penetrated several inches by fist
Soft	0.25 to 0.50	0.25 to 0.50	0.12 to 0.25	Easily penetrated several inches by thumb
Medium Stiff	0.50 to 1.0	0.50 to 1.0	0.25 to 0.50	Penetrated several inches by thumb with moderate effort
Stiff	1 to 2	1 to 2	0.50 to 1.0	Readily indented by thumb but penetrated only with great effort
Very Stiff	2 to 4	2 to 4	1.0 to 2.0	Readily indented by thumbnail
Hard	> 4.0	> 4.0	> 2.0	Indented by thumbnail with difficulty

BOREHOLE IDENTIFICATION

Symbol	Hole Type	Description
Size	A	Auger Boring
Size	R P	Rotary drilled boring Rotary percussion boring (air)
Size	R	Rotary drilled diamond core
Size	HD HA	Hand driven (1-inch soil tube) Hand Auger
●	D	Dynamic Cone Penetration Boring
▲	CPT	Cone Penetration Test (ASTM D 5778-95)
[ ]	O	Other

Note: Size in inches.

PLASTICITY OF FINE-GRAINED SOILS

Description	Criteria
Nonplastic	A 1/8-inch thread cannot be rolled at any water content.
Low	The thread can barely be rolled and the lump cannot be formed when drier than the plastic limit.
Medium	The thread is easy to roll and not much time is required to reach the plastic limit. The thread cannot be rerolled after reaching the plastic limit. The lump crumbles when drier than the plastic limit.
High	It takes considerable time rolling and kneading to reach the plastic limit. The thread can be rerolled several times after reaching the plastic limit. The lump can be formed without crumbling when drier than the plastic limit.

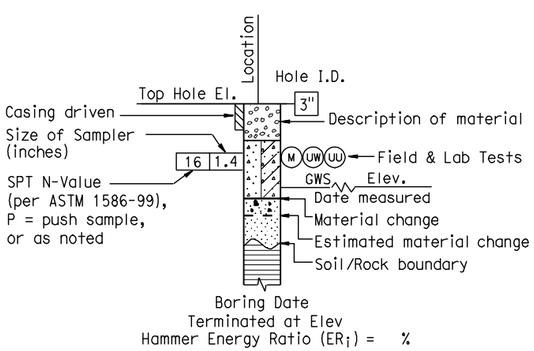

ROTARY BORING

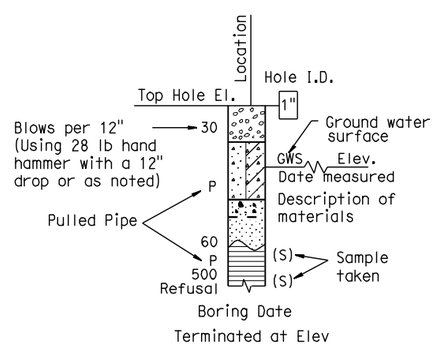

HAND BORING

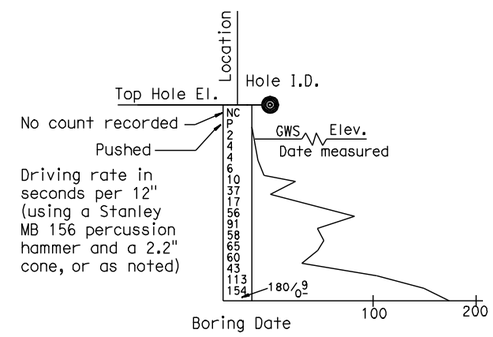

DYNAMIC CONE PENETRATION BORING

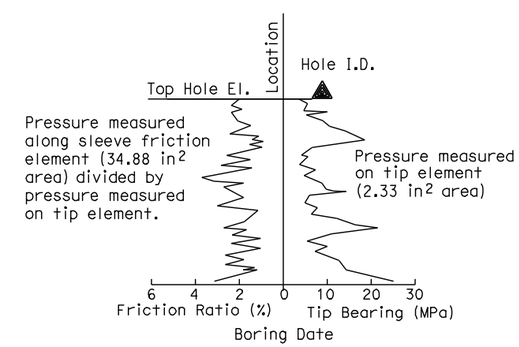

CONE PENETRATION TEST (CPT) SOUNDING

INITIAL PS&E

Robert Zezoff DESIGN OVERSIGHT	DRAWN BY	A. Gorden	C. Leszkiewicz FIELD INVESTIGATION BY:
SIGN OFF DATE	CHECKED BY		DATE 2/25/08

PREPARED FOR THE STATE OF CALIFORNIA DEPARTMENT OF TRANSPORTATION

Mohammed Atiqullah
PROJECT ENGINEER

BRIDGE NO.

POST MILES 34.93

RETAINING WALL No. 137

SOIL LEGEND

LOG OF TEST BORINGS SHEET 6 OF 6

ORIGINAL SCALE IN INCHES FOR REDUCED PLANS 0 1 2 3

CU 08220
EA 0F1500

DISREGARD PRINTS BEARING EARLIER REVISION DATES 06/24/09

REVISION DATES

SHEET 12 OF 12

FILE => 10E-xxxx-z-lotb06.dgn

USERNAME => nmorales DATE PLOTTED => 24-JUN-2009 TIME PLOTTED => 15:16

DIST	COUNTY	ROUTE	KILOMETER POST TOTAL PROJECT	SHEET No	TOTAL SHEETS
8	SBd	10	33.3/R36.9	XXX	XXX

REGISTERED CIVIL ENGINEER ------09

PLANS APPROVAL DATE

REGISTERED PROFESSIONAL ENGINEER ROBERT E. HAWTHORNE No. 40075 Exp. 03/31/10 CIVIL STATE OF CALIFORNIA

The State of California or its officers or agents shall not be responsible for the accuracy or completeness of electronic copies of this plan sheet.

SANBAG
1170 WEST 3RD STREET
2ND FLOOR
SAN BERNARDINO, CA 92410

AECOM
999 W. TOWN & COUNTRY RD
ORANGE, CA 92868

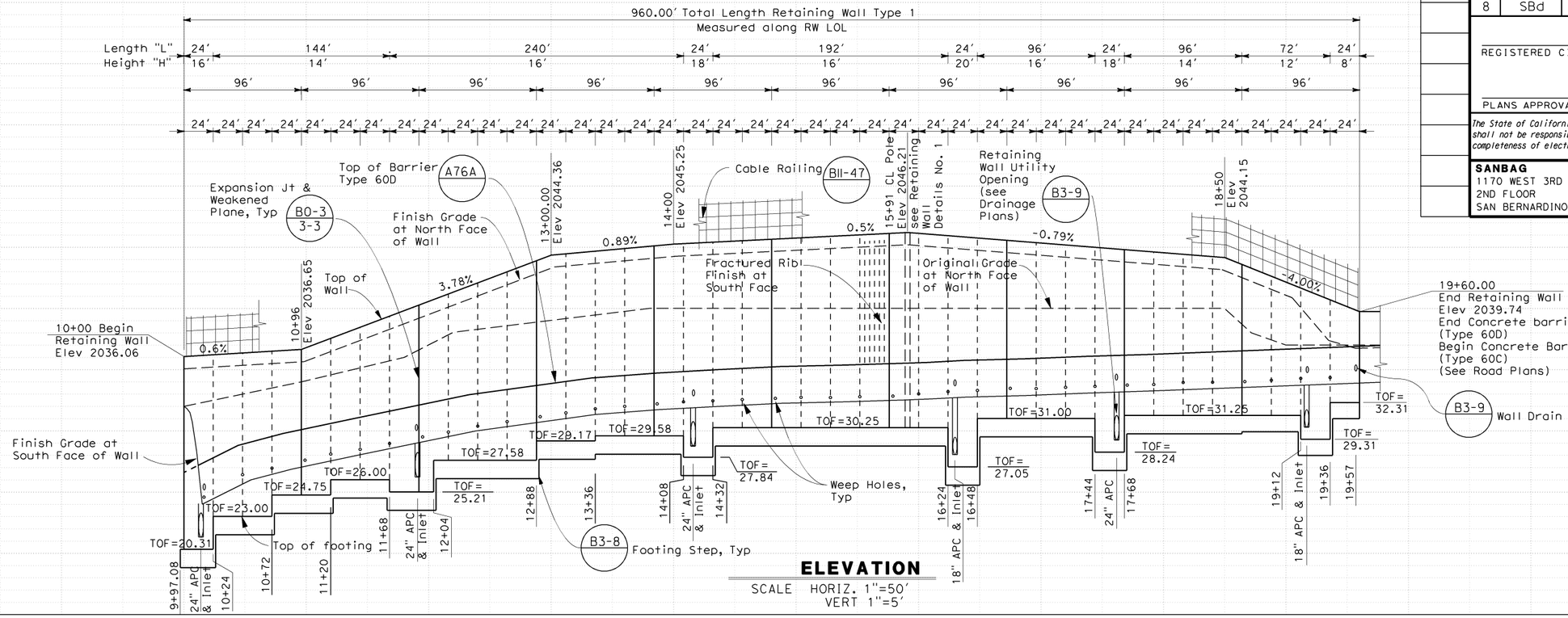

ELEVATION

SCALE HORIZ. 1"=50'
VERT 1"=5'

No.	R	Δ	T	L
1	3258.02'	4°44'13"	135.21'	269.36'

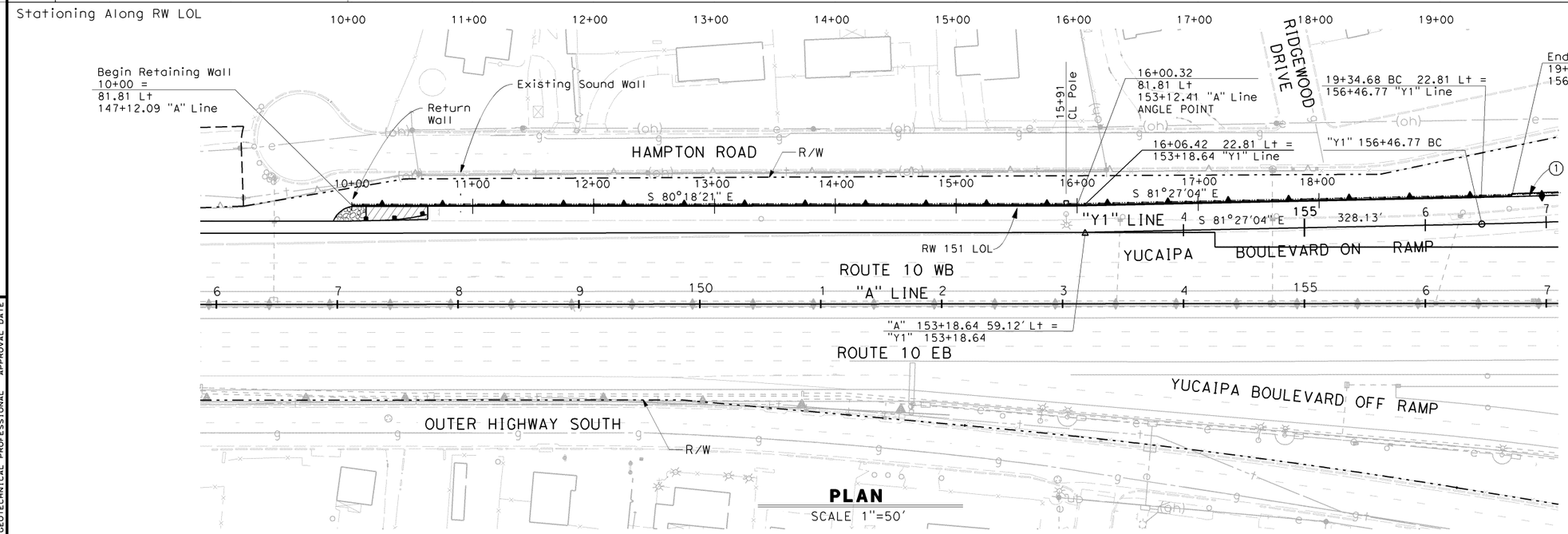

PLAN

SCALE 1"=50'

ESTIMATED QUANTITIES

Structure Excavation (Retaining Wall)	5750	CY
Structure Backfill (Retaining Wall)	3353	CY
Pervious Backfill Material (Retaining Wall)	278	CY
Structural Concrete (Retaining Wall)	1187	CY
Anti-Graffitti Coating	12608	SF
Fractured Rib Texture	7975	SF
Bar Reinforcing Steel (Retaining Wall)	130944	LB
Minor Concrete (Gutter)	16	CY
Cable Railing	960	LF
Concrete Barrier Type 60D	960	LF

N

SCALE 1"=50'

GEOTECHNICAL PROFESSIONAL APPROVAL DATE

DESIGN OVERSIGHT

SIGN OFF DATE

SCALE:	VERT.DATUM NAVD 88	HORZ.DATUM NAD 83
PHOTOGRAMMETRY AS OF:	ALIGNMENT TIES	
SURVEYED BY	DRAFTED BY	
FIELD CHECKED BY	CHECKED BY	

	BY	CHECKED
DESIGN	R Ramoso/H Mai	R Hawthorne
DETAILS	C Morgan	R Hawthorne
QUANTITIES	R Ramoso/H Mai	R Hawthorne

PREPARED FOR THE STATE OF CALIFORNIA DEPARTMENT OF TRANSPORTATION

Ed Kouzi
PROJECT ENGINEER

BRIDGE NO. --
KILOMETER POST --

RETAINING WALL 151
GENERAL PLAN

FOUNDATION PLAN SHEET (METRIC) (REV. 10/27/05)

ORIGINAL SCALE IN MILLIMETERS FOR REDUCED PLANS 0 10 20 30 40 50 60 70 80 90 100

CU 08220
EA 0F1500

DISREGARD PRINTS BEARING EARLIER REVISION DATES

REVISION DATES (PRELIMINARY STAGE ONLY)

SHEET X OF XX

FILE => ...\0F150qa001.dgn

USERNAME => morganc3 DATE PLOTTED 6/30/2009 TIME PLOTTED =>

DIST	COUNTY	ROUTE	KILOMETER POST TOTAL PROJECT	SHEET No	TOTAL SHEETS
8	SBd	10	33.3/R36.9	XX	XX

XX-XX-09
REGISTERED CIVIL ENGINEER

PLANS APPROVAL DATE

REGISTERED PROFESSIONAL ENGINEER ROBERT E. HAWTHORNE No. 40075 Exp. 03-31-10 CIVIL STATE OF CALIFORNIA

The State of California or its officers or agents shall not be responsible for the accuracy or completeness of electronic copies of this plan sheet.

SANBAG
1170 WEST 3RD STREET
2ND FLOOR
SAN BERNARDINO, CA 92410

AECOM
999 W. TOWN & COUNTRY RD
ORANGE, CA 92868

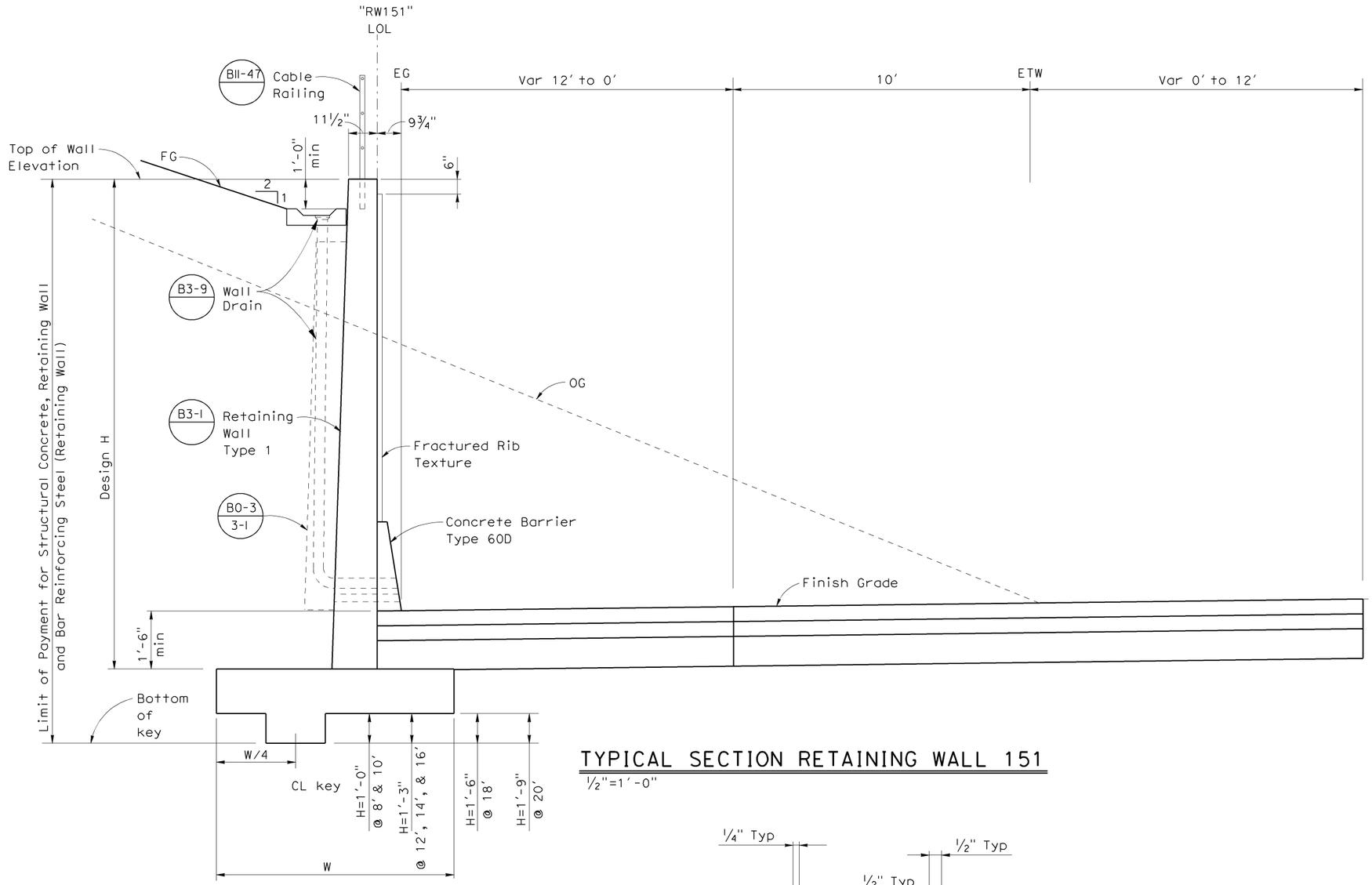

TYPICAL SECTION RETAINING WALL 151

½"=1'-0"

DESIGN DATA

DESIGN:	Service Load Design (SLD)
CONCRETE:	Reinforced Concrete, f'c = 3,600 psi fy = 60,000 psi
LOADING CASE:	1:2 Max Sloping Ground
SEISMIC LOAD:	No Seismic Loading
SOIL:	Ø = 33.7° y=123 psf Q = 3300 psf

PLAN SYMBOLS

A — Section Identification

Standard Plan Sheet Number
Detail Number

GENERAL NOTES:

1. For Design Notes, Approximate Wall Offset values Footing Step details, and Drainage notes, see B3-8
2. Footing Cover = 1'-6" minimum
3. 1' Over Excavation Required, see Retaining Wall Details No. 1 for Structural Excavation and Structural Backfill.
4. Wall Drain complete in place including Grate is considered incidental to Structural Concrete (Retaining Wall).

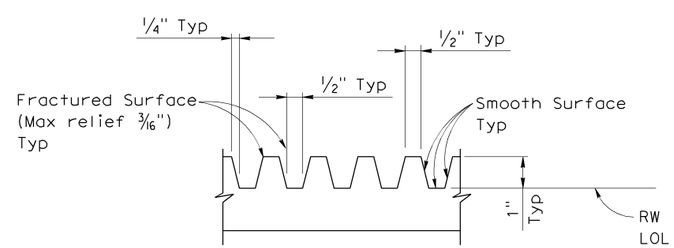

FRACTURED RIB TEXTURE

Not To Scale

STANDARD PLANS DATED MAY 2006

A76A	Concrete Barrier Type 60D
B0-3	Bridge Details
B3-1	Retaining Wall Type 1 - H = 4' Through 30'
B3-8	Retaining Wall Details No.1
B3-9	Retaining Wall Details No.2
B11-47	Cable Railing

05-10-07 APPROVAL DATE
GEOTECHNICAL PROFESSIONAL

DESIGN OVERSIGHT	SCALE:	VERT.DATUM NAVD 88	HORZ.DATUM NAD 83	DESIGN	BY R Ramoso/H Mai	CHECKED R Hawthorne
	PHOTOGRAMMETRY AS OF:		ALIGNMENT TIES	DETAILS	BY C Morgan	CHECKED R Hawthorne
SIGN OFF DATE	SURVEYED	BY	DRAFTED BY	QUANTITIES	BY R Ramoso/H Mai	CHECKED R Hawthorne
	FIELD CHECKED	BY	CHECKED BY			

PREPARED FOR THE STATE OF CALIFORNIA DEPARTMENT OF TRANSPORTATION

Ed Kouzi
PROJECT ENGINEER

BRIDGE NO. XX-XXXX
KILOMETER POST XXX.X

RETAINING WALL 151
TYPICAL SECTION

ORIGINAL SCALE IN MILLIMETERS FOR REDUCED PLANS 0 10 20 30 40 50 60 70 80 90 100

CU 08220
EA 0F1500

DISREGARD PRINTS BEARING EARLIER REVISION DATES

REVISION DATES (PRELIMINARY STAGE ONLY) X-X-XX

SHEET X OF XX

FILE => ...\0F150qa002.dgn

USERNAME => morganc3 DATE PLOTTED => 6/30/2009 TIME PLOTTED => 6:48:22 PM

DIST	COUNTY	ROUTE	KILOMETER POST TOTAL PROJECT	SHEET No	TOTAL SHEETS
8	SBd	10	33.3/R36.9	XX	XX

XX-XX-09
REGISTERED CIVIL ENGINEER

PLANS APPROVAL DATE

REGISTERED PROFESSIONAL ENGINEER ROBERT E. HAWTHORNE No. 40075 Exp. 03-31-10 CIVIL STATE OF CALIFORNIA

The State of California or its officers or agents shall not be responsible for the accuracy or completeness of electronic copies of this plan sheet.

SANBAG
1170 WEST 3RD STREET
2ND FLOOR
SAN BERNARDINO, CA 92410

AECOM
999 W. TOWN & COUNTRY RD
ORANGE, CA 92868

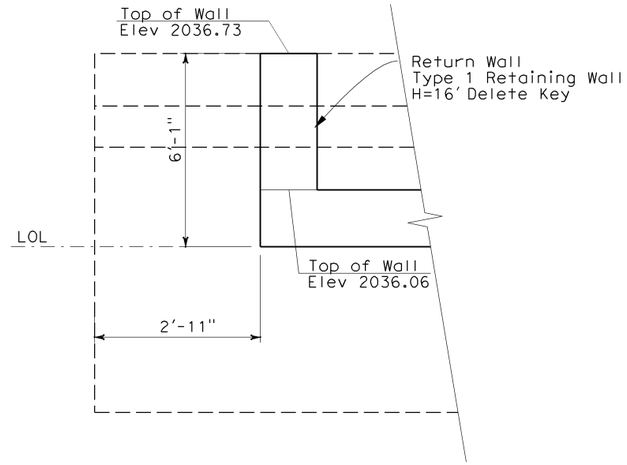

RETURN WALL PLAN
NTS

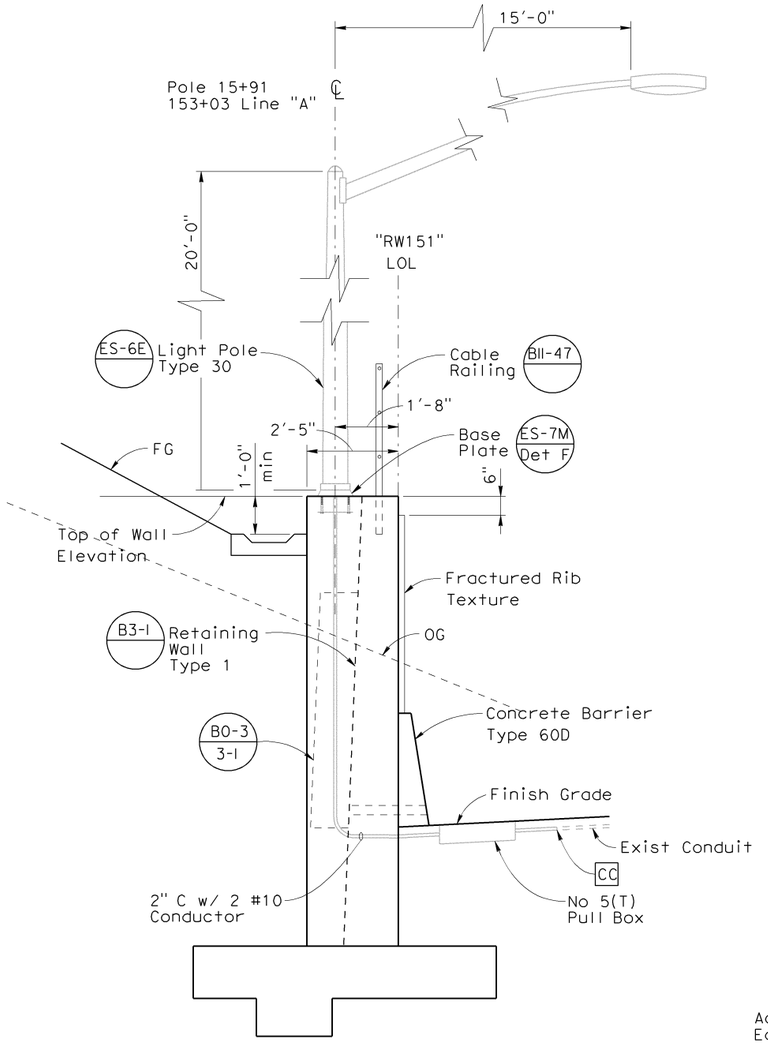

LIGHT POLE AT RETAINING WALL 151 SECTION DETAIL A (STA 15+91)
1/2"=1'-0"

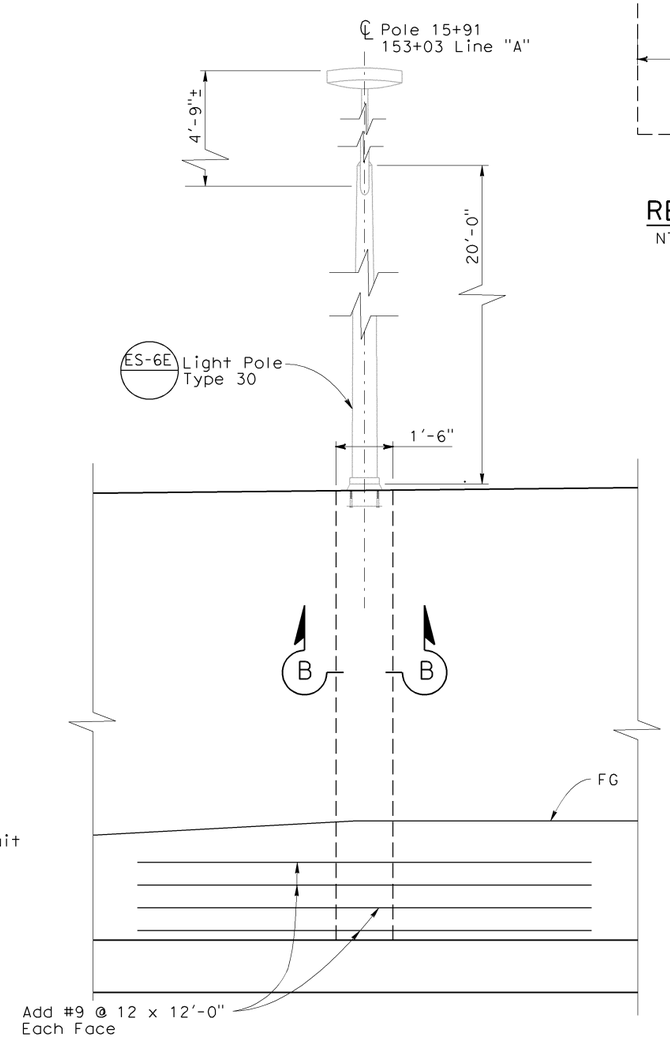

LIGHT POLE AT RETAINING WALL 151 ELEVATION DETAIL B
1/2"=1'-0"

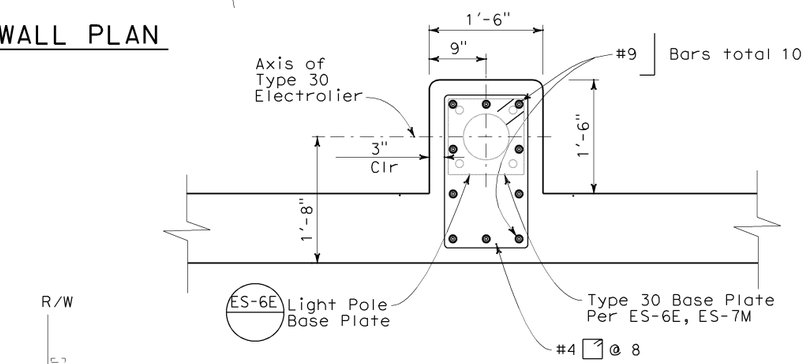

SECTION B-B
1"=1'-0"

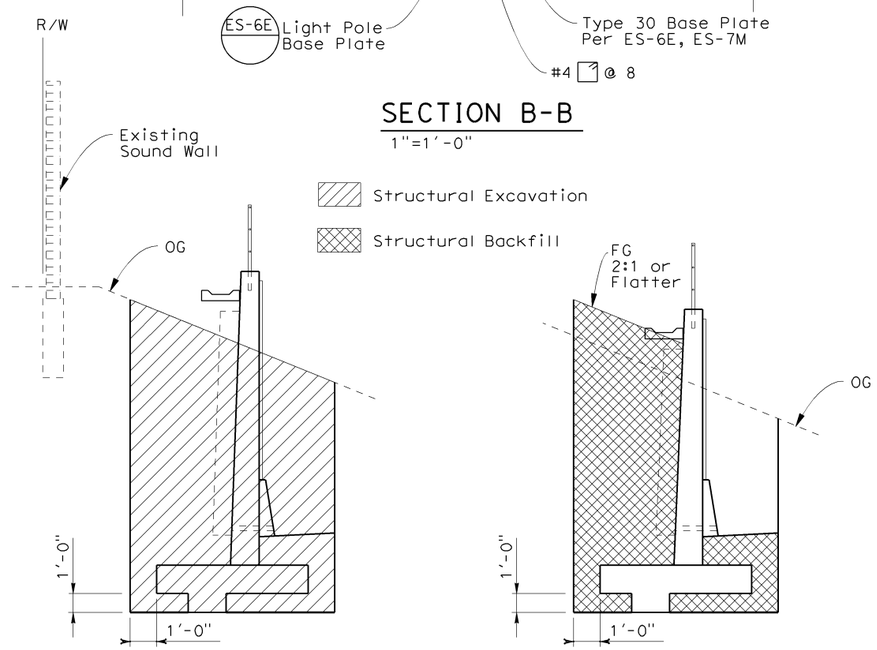

STRUCTURAL EXCAVATION
NTS

STRUCTURAL BACKFILL
NTS

GEOTECHNICAL PROFESSIONAL APPROVAL DATE 05-10-07

DESIGN OVERSIGHT	SCALE:	VERT.DATUM NAVD 88	HORZ.DATUM NAD 83	DESIGN	BY R Ramoso/H Mai	CHECKED R Hawthorne	PREPARED FOR THE STATE OF CALIFORNIA DEPARTMENT OF TRANSPORTATION
	PHOTOGRAMMETRY AS OF:	ALIGNMENT TIES		DETAILS	BY C Morgan/C Lente	CHECKED R Hawthorne	
	SURVEYED BY	DRAFTED BY		QUANTITIES	BY R Ramoso/H Mai	CHECKED R Hawthorne	
SIGN OFF DATE	FIELD CHECKED BY	CHECKED BY					

Ed Kouzi
PROJECT ENGINEER

BRIDGE NO. XX-XXXX
KILOMETER POST XXX.X

RETAINING WALL 151
RETAINING WALL DETAILS NO.1

ORIGINAL SCALE IN MILLIMETERS FOR REDUCED PLANS 0 10 20 30 40 50 60 70 80 90 100

CU 08220
EA 0F1500

DISREGARD PRINTS BEARING EARLIER REVISION DATES

REVISION DATES (PRELIMINARY STAGE ONLY) | SHEET X | OF XX

FILE => ...\0F150qa003.dgn

USERNAME => morganc3 DATE PLOTTED => 6/30/2009 TIME PLOTTED => 6:50:51 PM

DIST	COUNTY	ROUTE	KILOMETER POST TOTAL PROJECT	SHEET No	TOTAL SHEETS
8	SBd	10	33.3/R36.9	XXX	XXX

REGISTERED CIVIL ENGINEER ------09

PLANS APPROVAL DATE

REGISTERED PROFESSIONAL ENGINEER ROBERT E. HAWTHORNE No. 40075 Exp. 03/31/10 CIVIL STATE OF CALIFORNIA

The State of California or its officers or agents shall not be responsible for the accuracy or completeness of electronic copies of this plan sheet.

SANBAG
1170 WEST 3RD STREET
2ND FLOOR
SAN BERNARDINO, CA 92410

AECOM
999 W. TOWN & COUNTRY RD
ORANGE, CA 92868

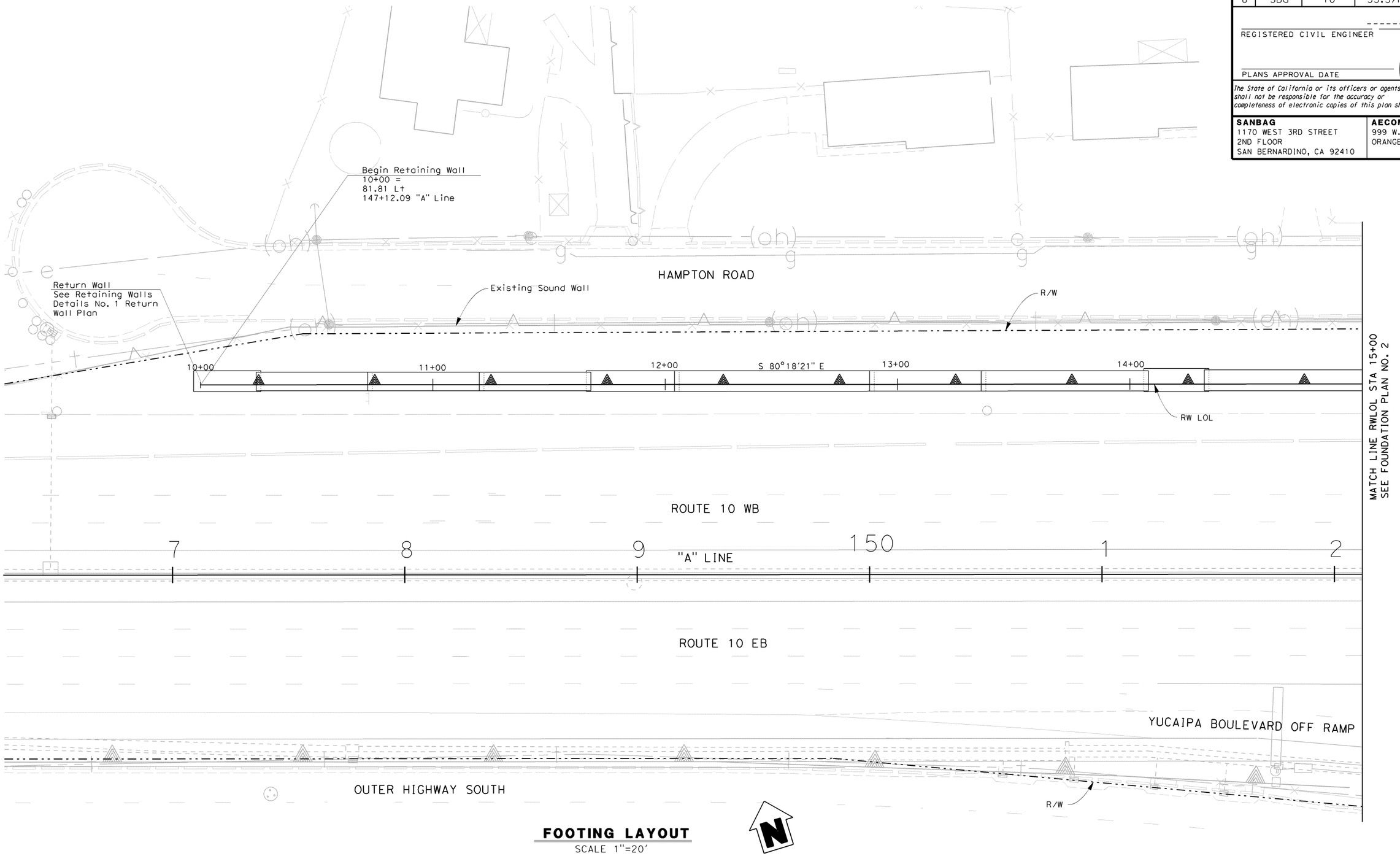

FOOTING LAYOUT
SCALE 1"=20'

GEOTECHNICAL PROFESSIONAL APPROVAL DATE

DESIGN OVERSIGHT	SCALE:	VERT.DATUM NAVD 88	HORZ.DATUM NAD 83	DESIGN	BY R Ramoso/H Mai	CHECKED R Hawthorne	
	PHOTOGRAMMETRY AS OF:	ALIGNMENT TIES		DETAILS	BY C Morgan	CHECKED R Hawthorne	
	SURVEYED BY	DRAFTED BY		QUANTITIES	BY R Ramoso/H Mai	CHECKED R Hawthorne	
SIGN OFF DATE	FIELD CHECKED BY	CHECKED BY					

PREPARED FOR THE STATE OF CALIFORNIA DEPARTMENT OF TRANSPORTATION

Ed Kouzi
PROJECT ENGINEER

BRIDGE NO. --
KILOMETER POST --

RETAINING WALL 151
FOUNDATION PLAN NO.1

FOUNDATION PLAN SHEET (METRIC) (REV. 10/27/05)

ORIGINAL SCALE IN MILLIMETERS FOR REDUCED PLANS 0 10 20 30 40 50 60 70 80 90 100

CU 08220
EA 0F1500

DISREGARD PRINTS BEARING EARLIER REVISION DATES

REVISION DATES (PRELIMINARY STAGE ONLY)

SHEET X OF XX

FILE => ...\0F150qa004.dgn

USERNAME => morganc3 DATE PLOTTED => 6/30/2009 TIME PLOTTED =>

DIST	COUNTY	ROUTE	KILOMETER POST TOTAL PROJECT	SHEET No	TOTAL SHEETS
8	SBd	10	33.3/R36.9	XXX	XXX

REGISTERED CIVIL ENGINEER ------09

PLANS APPROVAL DATE

REGISTERED PROFESSIONAL ENGINEER ROBERT E. HAWTHORNE No. 40075 Exp. 03/31/10 CIVIL STATE OF CALIFORNIA

The State of California or its officers or agents shall not be responsible for the accuracy or completeness of electronic copies of this plan sheet.

SANBAG
1170 WEST 3RD STREET
2ND FLOOR
SAN BERNARDINO, CA 92410

AECOM
999 W. TOWN & COUNTRY RD
ORANGE, CA 92868

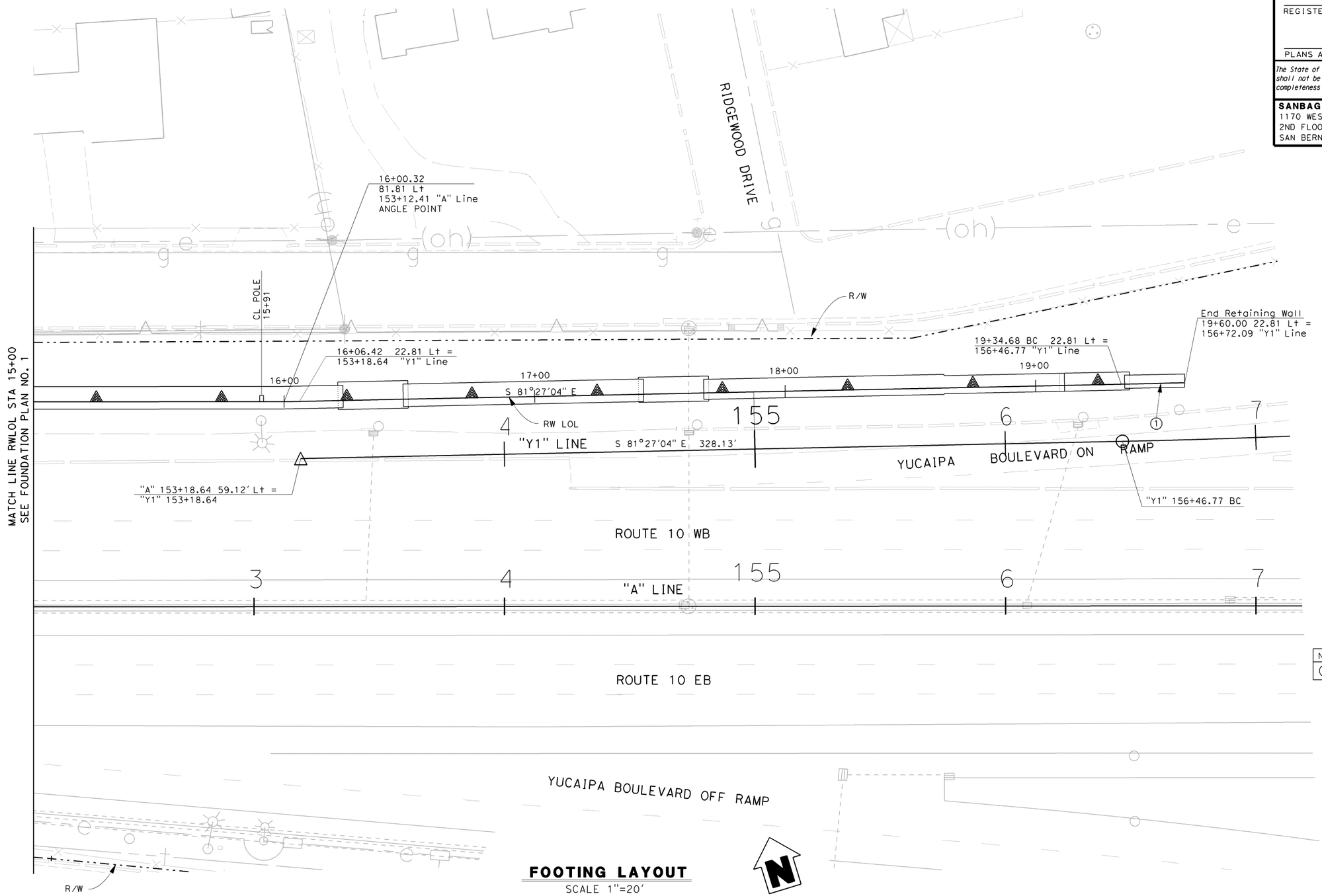

No.	R	Δ	T	L
1	3258.02'	4°44'13"	135.21'	269.36'

FOOTING LAYOUT

SCALE 1"=20'

GEOTECHNICAL PROFESSIONAL APPROVAL DATE

DESIGN OVERSIGHT

SIGN OFF DATE

SCALE:	VERT.DATUM NAVD 88	HORZ.DATUM NAD 83
PHOTOGRAMMETRY AS OF:	ALIGNMENT TIES	
SURVEYED BY	DRAFTED BY	
FIELD CHECKED BY	CHECKED BY	

	BY	CHECKED
DESIGN	R Ramoso/H Mai	R Hawthorne
DETAILS	C Morgan	R Hawthorne
QUANTITIES	R Ramoso/H Mai	R Hawthorne

PREPARED FOR THE STATE OF CALIFORNIA DEPARTMENT OF TRANSPORTATION

Ed Kouzi
PROJECT ENGINEER

BRIDGE NO. --

KILOMETER POST --

RETAINING WALL 151

FOUNDATION PLAN NO.2

FOUNDATION PLAN SHEET (METRIC) (REV. 10/27/05)

ORIGINAL SCALE IN MILLIMETERS FOR REDUCED PLANS 0 10 20 30 40 50 60 70 80 90 100

CU 08220
EA 0F1500

DISREGARD PRINTS BEARING EARLIER REVISION DATES

REVISION DATES (PRELIMINARY STAGE ONLY)

SHEET X OF XX

FILE => ...\0F150qa005.dgn

USERNAME => morganc3 DATE PLOTTED => 6/30/2009 TIME PLOTTED =>

DIST	COUNTY	ROUTE	POST MILES TOTAL PROJECT	SHEET No	TOTAL SHEETS
8	SBd	10	33.3/R36.9	XXX	

REGISTERED CIVIL ENGINEER X DATE

PLANS APPROVAL DATE

REGISTERED PROFESSIONAL ENGINEER CRAIG P. LESZKIEWICZ No. 67419 Exp. 12/31/2010 CIVIL STATE OF CALIFORNIA

The State of California or its officers or agents shall not be responsible for the accuracy or completeness of electronic copies of this plan sheet.

SANBAG
1170 WEST 3RD STREET, 2ND FLOOR
SAN BERNARDINO, CA 92410

CH2M HILL
2280 MARKET STREET, SUITE 200
RIVERSIDE, CA 92501

Notes:

1. This LOTB sheet was prepared in accordance with the Caltrans Soil & Rock Logging, Classification, and Presentation Manual.
2. .38" and 2.36" diameter samples were taken alternately using a split-spoon sampler and a modified California split barrel sampler, respectively. The California modified split barrel sampler has an inside diameter (I.D.) of 2.36" and the outside diameter (O.D.) of 3.00". The split-spoon sampler has an I.D. of 1.38" and an outside diameter of 2.00".

   An automatic trip hammer system was used to advance the drive and SPT samplers.

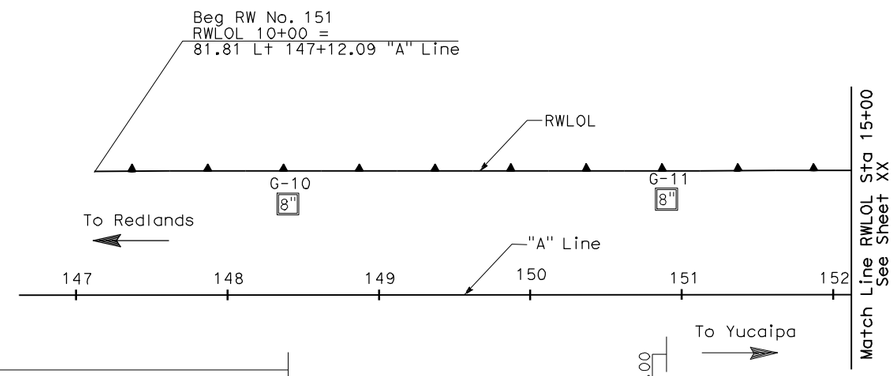

PLAN

1"=50'

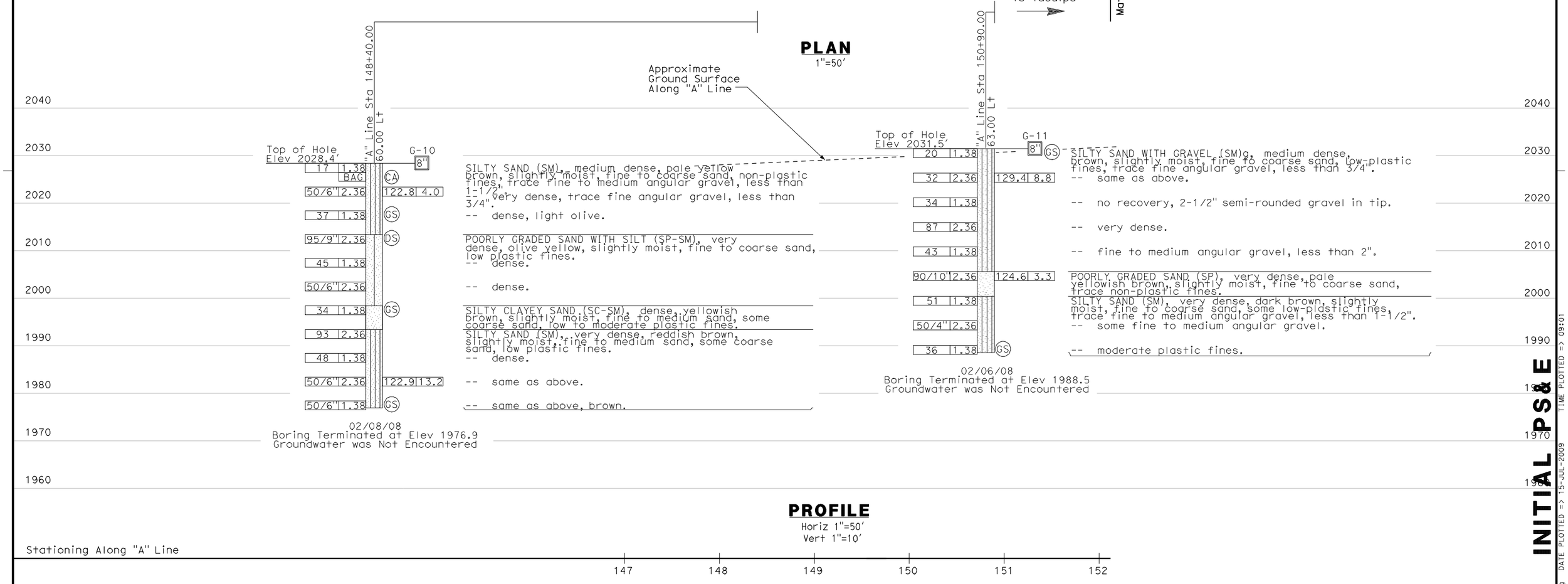

PROFILE

Horiz 1"=50'
Vert 1"=10'

Stationing Along "A" Line

147 148 149 150 151 152

INITIAL PS&E

USERNAME => atruong DATE PLOTTED => 15-JUL-2009 TIME PLOTTED => 09:01

Robert Zezoff DESIGN OVERSIGHT	DRAWN BY	A. Gorden	C. Leszkiewicz FIELD INVESTIGATION BY:	PREPARED FOR THE STATE OF CALIFORNIA DEPARTMENT OF TRANSPORTATION	Mohammed Atiqullah PROJECT ENGINEER
X SIGN OFF DATE	CHECKED BY	X	DATE 2/6/08 & 2/8/08		

BRIDGE NO. --
POST MILES 33.28

RETAINING WALL No. 151

LOG OF TEST BORINGS

ORIGINAL SCALE IN INCHES FOR REDUCED PLANS 0 1 2 3

CU 08220
EA 0F1500

DISREGARD PRINTS BEARING EARLIER REVISION DATES 06/28/09

REVISION DATES

SHEET 1 OF 12

FILE => 0F150ga006.dgn

DIST	COUNTY	ROUTE	POST MILES TOTAL PROJECT	SHEET No	TOTAL SHEETS
8	SBd	10	33.3/R36.9	XXX	

REGISTERED CIVIL ENGINEER X DATE

PLANS APPROVAL DATE

REGISTERED PROFESSIONAL ENGINEER CRAIG P. LESZKIEWICZ No. 67419 Exp. 12/31/2010 CIVIL STATE OF CALIFORNIA

The State of California or its officers or agents shall not be responsible for the accuracy or completeness of electronic copies of this plan sheet.

SANBAG
1170 WEST 3RD STREET, 2ND FLOOR
SAN BERNARDINO, CA 92410

CH2M HILL
2280 MARKET STREET, SUITE 200
RIVERSIDE, CA 92501

Notes:

1. This LOTB sheet was prepared in accordance with the Caltrans Soil & Rock Logging, Classification, and Presentation Manual.

2. .38" and 2.36" diameter samples were taken alternately using a split-spoon sampler and a modified California split barrel sampler, respectively. The California modified split barrel sampler has an inside diameter (I.D.) of 2.36" and the outside diameter (O.D.) of 3.00". The split-spoon sampler has an I.D. of 1.38" and an outside diameter of 2.00".

   An automatic trip hammer system was used to advance the drive and SPT samplers.

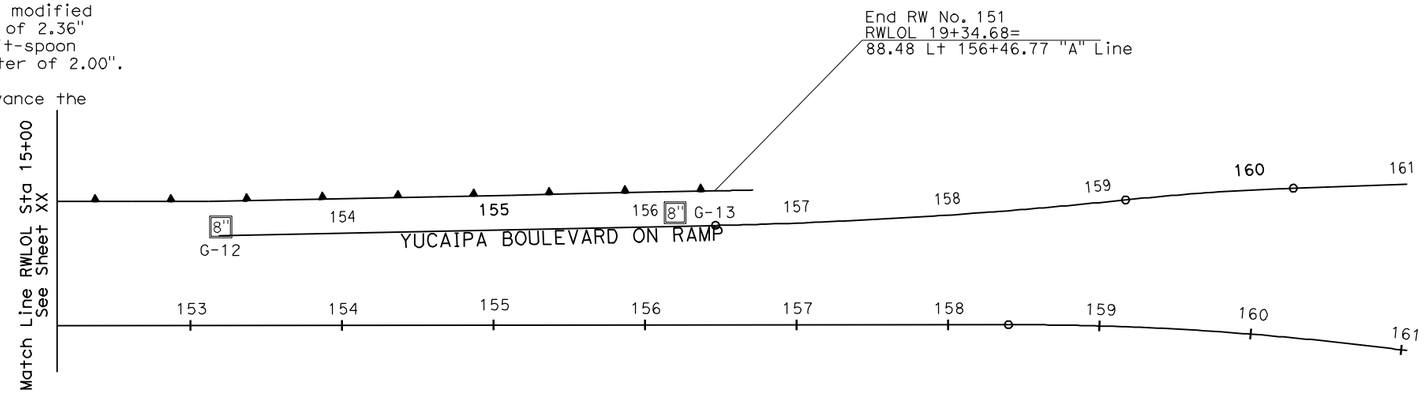

PLAN

1"=50'

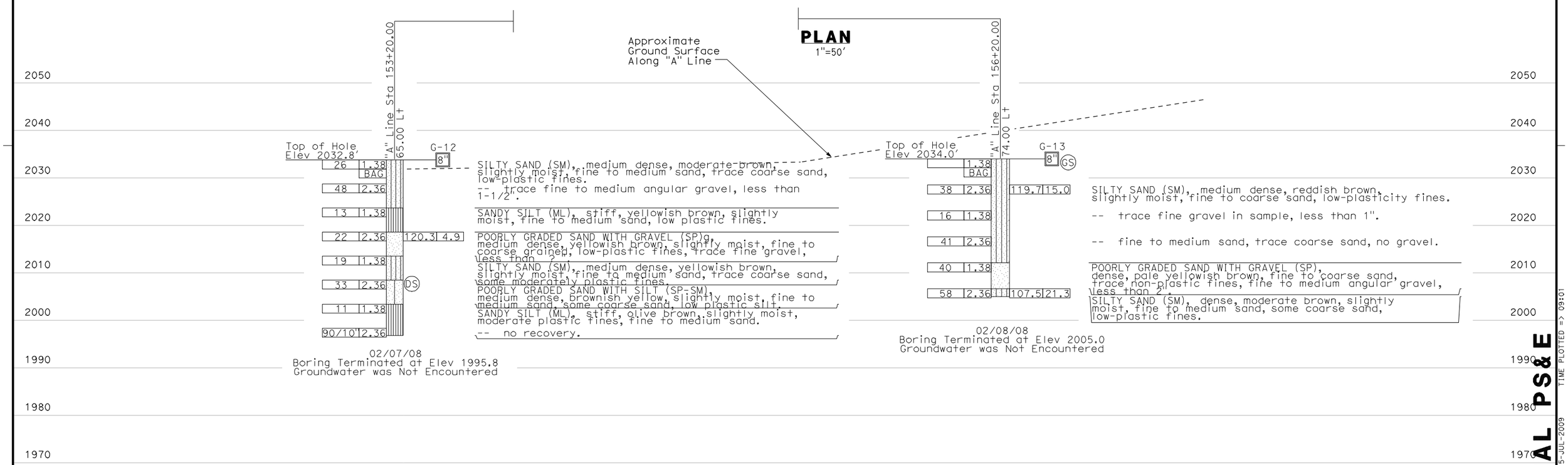

PROFILE

Horiz 1"=50'
Vert 1"=10'

Stationing Along "A" Line

153 154 155 156 157 158 159 160 161

INITIAL PS&E

USERNAME => atruong DATE PLOTTED => 15-JUL-2009 TIME PLOTTED => 09:01

Robert Zezoff DESIGN OVERSIGHT	DRAWN BY	A. Gorden	C. Leszkiewicz FIELD INVESTIGATION BY:	PREPARED FOR THE STATE OF CALIFORNIA DEPARTMENT OF TRANSPORTATION	Mohammed Atiqullah PROJECT ENGINEER
X SIGN OFF DATE	CHECKED BY	X	DATE 2/7/08 & 2/8/08		

BRIDGE NO. --
POST MILES 36.28

RETAINING WALL No. 151

LOG OF TEST BORINGS

ORIGINAL SCALE IN INCHES FOR REDUCED PLANS 0 1 2 3

CU 08220
EA 0F1500

DISREGARD PRINTS BEARING EARLIER REVISION DATES 06/24/09

REVISION DATES

SHEET 2 OF 12

FILE => 0F150ga007.dgn

DIST	COUNTY	ROUTE	KILOMETER POST TOTAL PROJECT	SHEET No	TOTAL SHEETS
8	SBd	10	33.3/R36.9	XXX	XXX

REGISTERED CIVIL ENGINEER ------09

PLANS APPROVAL DATE

REGISTERED PROFESSIONAL ENGINEER ROBERT E. HAWTHORNE No. 40075 Exp. 03/31/10 CIVIL STATE OF CALIFORNIA

The State of California or its officers or agents shall not be responsible for the accuracy or completeness of electronic copies of this plan sheet.

SANBAG
1170 WEST 3RD STREET
2ND FLOOR
SAN BERNARDINO, CA 92410

AECOM
999 W. TOWN & COUNTRY RD
ORANGE, CA 92868

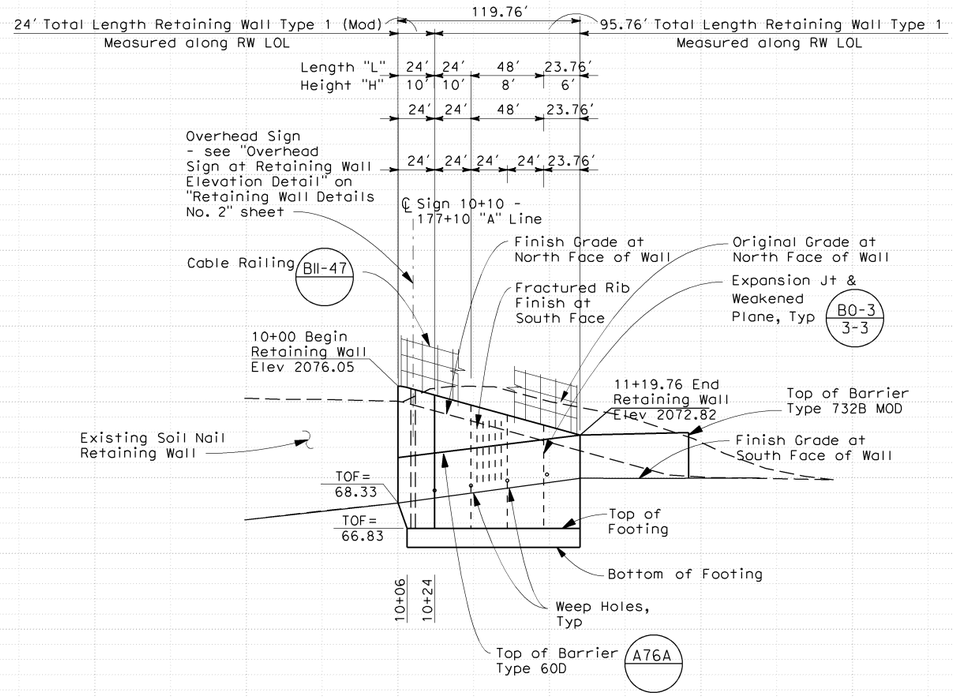

ELEVATION

SCALE HORIZ. 1"=50'
VERT 1"=5'

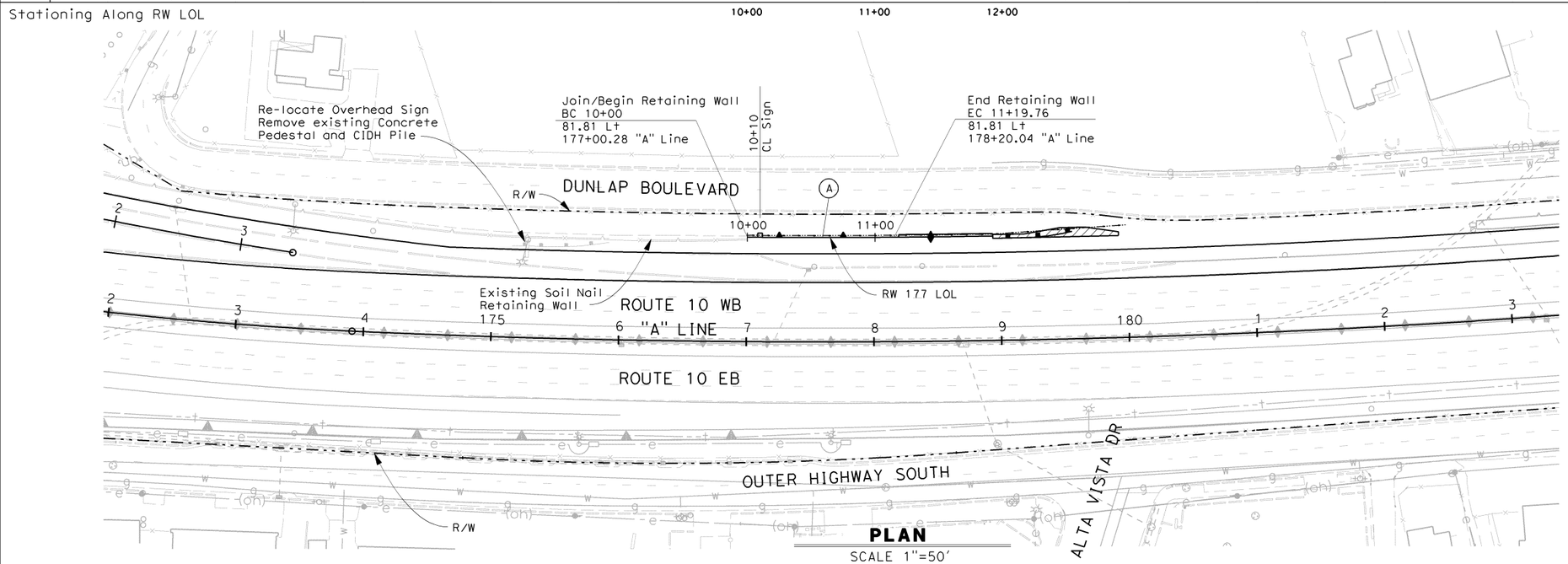

PLAN

SCALE 1"=50'

CURVE DATA

NO.	R	Δ	T	L
A	7881.61	00°52'14"	59.88	119.76

ESTIMATED QUANTITIES

Structure Excavation (Retaining Wall)	656	CY
Structure Backfill (Retaining Wall)	485	CY
Pervious Backfill Material (Retaining Wall)	8	CY
Structural Concrete (Retaining Wall)	102	CY
Anti-Graffitti Coating	937	SF
Fractured Rib Texture	262	SF
Bar Reinforcing Steel (Retaining Wall)	13214	LB
Minor Concrete (Gutter)	2	CY
Cable Railing	120	LF
Concrete Barrier Type 60D	120	LF

N

SCALE 1"=50'

GEOTECHNICAL PROFESSIONAL APPROVAL DATE ------

DESIGN OVERSIGHT

SIGN OFF DATE

SCALE:	VERT.DATUM NAVD 88	HORZ.DATUM NAD 83
PHOTOGRAMMETRY AS OF:	ALIGNMENT TIES	
SURVEYED BY	DRAFTED BY	
FIELD CHECKED BY	CHECKED BY	

	BY	CHECKED
DESIGN	R Ramoso/H Mai	R Hawthorne
DETAILS	C Morgan	R Hawthorne
QUANTITIES	R Ramoso/H Mai	R Hawthorne

PREPARED FOR THE STATE OF CALIFORNIA DEPARTMENT OF TRANSPORTATION

Ed Kouzi
PROJECT ENGINEER

BRIDGE NO. --
KILOMETER POST --

RETAINING WALL 177
GENERAL PLAN

FOUNDATION PLAN SHEET (METRIC) (REV. 10/27/05)

ORIGINAL SCALE IN MILLIMETERS FOR REDUCED PLANS 0 10 20 30 40 50 60 70 80 90 100

CU 08220
EA 0F1500

DISREGARD PRINTS BEARING EARLIER REVISION DATES

REVISION DATES (PRELIMINARY STAGE ONLY)

SHEET X OF XX

FILE => ...\0F150qb001.dgn

USERNAME => morganc3 DATE PLOTTED => 6/30/2009 TIME PLOTTED => 8:08:10 PM

DIST	COUNTY	ROUTE	KILOMETER POST TOTAL PROJECT	SHEET No	TOTAL SHEETS
8	SBd	10	33.3/R36.9	XX	XX

XX-XX-09
REGISTERED CIVIL ENGINEER

PLANS APPROVAL DATE

REGISTERED PROFESSIONAL ENGINEER
ROBERT E. HAWTHORNE
No. 40075
Exp. 03-31-10
CIVIL
STATE OF CALIFORNIA

The State of California or its officers or agents shall not be responsible for the accuracy or completeness of electronic copies of this plan sheet.

SANBAG
1170 WEST 3RD STREET
2ND FLOOR
SAN BERNARDINO, CA 92410

AECOM
999 W. TOWN & COUNTRY RD
ORANGE, CA 92868

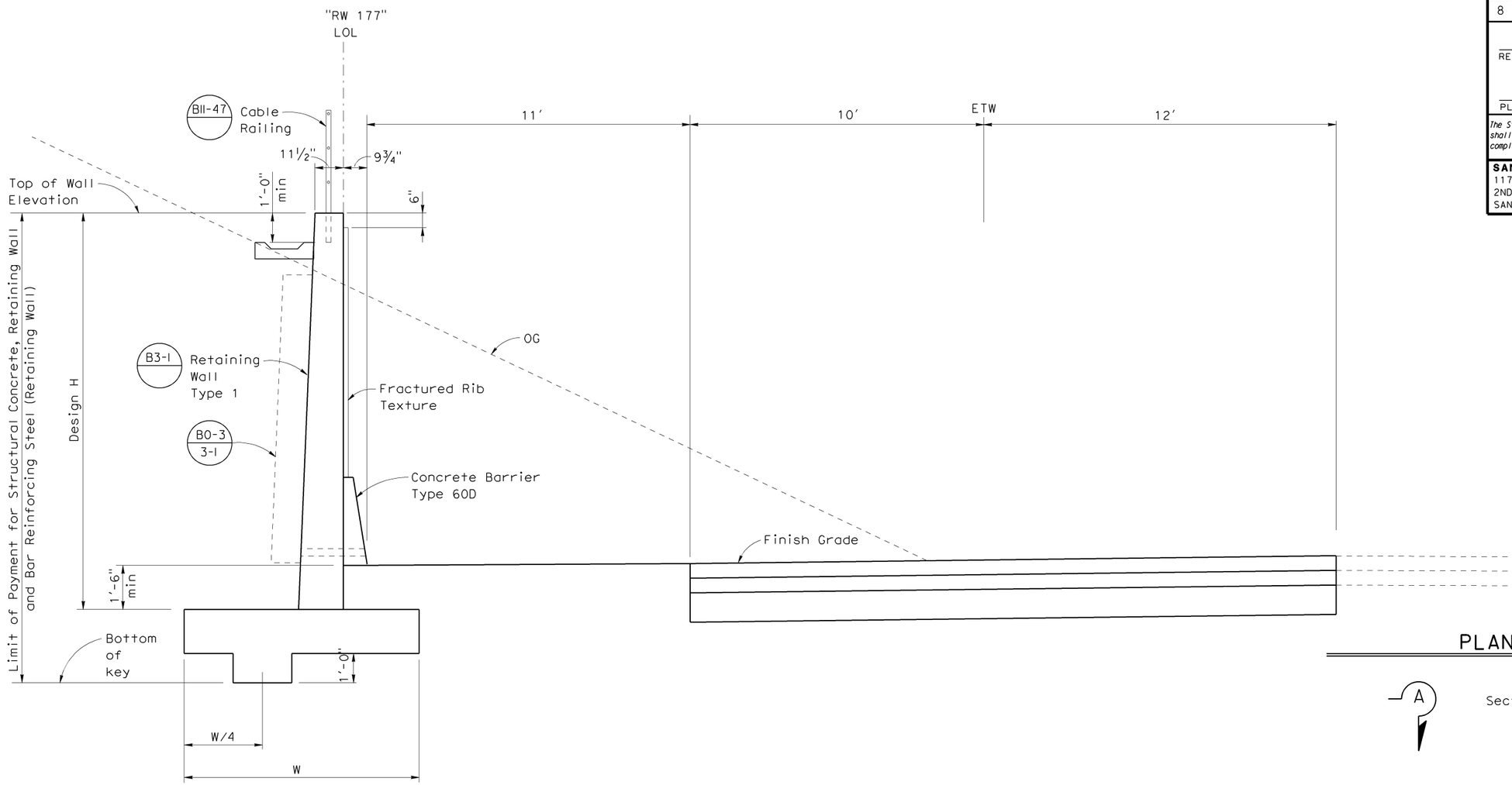

TYPICAL SECTION RETAINING WALL 177

½"=1'-0"

PLAN SYMBOLS

A — Section Identification

Standard Plan Sheet Number
Detail Number

STANDARD PLANS DATED MAY 2006

A76A	Concrete Barrier Type 60D
B0-3	Bridge Details
B3-1	Retaining Wall Type 1 - H = 4' Through 30'
B3-8	Retaining Wall Details No.1
B3-9	Retaining Wall Details No.2
B11-47	Cable Railing

GENERAL NOTES:

1. For Design Notes, Approximate Wall Offset values Footing Step details, and Drainage notes, see B3-8
2. Footing Cover = 1'-6" minimum
3. 1' Over Excavation Required, see Retaining Wall Details No. 1 for Structural Excavation and Structural Backfill.

05-10-07
GEOTECHNICAL PROFESSIONAL APPROVAL DATE

DESIGN OVERSIGHT	SCALE:	VERT.DATUM NAVD 88	HORZ.DATUM NAD 83	DESIGN	BY R Ramoso/H Mai	CHECKED R Hawthorne	PREPARED FOR THE STATE OF CALIFORNIA DEPARTMENT OF TRANSPORTATION
	PHOTOGRAMMETRY AS OF:		ALIGNMENT TIES	DETAILS	BY C Morgan	CHECKED R Hawthorne	
SIGN OFF DATE	SURVEYED BY		DRAFTED BY	QUANTITIES	BY R Ramoso/H Mai	CHECKED R Hawthorne	
	FIELD CHECKED BY		CHECKED BY				

Ed Kouzi
PROJECT ENGINEER

BRIDGE NO. XX-XXXX
KILOMETER POST XXX.X

RETAINING WALL 177
TYPICAL SECTION NO. 1

ORIGINAL SCALE IN MILLIMETERS FOR REDUCED PLANS 0 10 20 30 40 50 60 70 80 90 100

CU 08220
EA 0F1500

DISREGARD PRINTS BEARING EARLIER REVISION DATES

REVISION DATES (PRELIMINARY STAGE ONLY) X-X-XX

SHEET X OF XX

FILE => ...\0F150qb002.dgn

USERNAME => morganc3 DATE PLOTTED => 6/30/2009 TIME PLOTTED => 8:05:25 PM

DIST	COUNTY	ROUTE	KILOMETER POST TOTAL PROJECT	SHEET No	TOTAL SHEETS
8	SBd	10	33.3/R36.9	XX	XX

XX-XX-09
REGISTERED CIVIL ENGINEER

PLANS APPROVAL DATE

REGISTERED PROFESSIONAL ENGINEER ROBERT E. HAWTHORNE No. 40075 Exp. 03-31-10 CIVIL STATE OF CALIFORNIA

The State of California or its officers or agents shall not be responsible for the accuracy or completeness of electronic copies of this plan sheet.

SANBAG
1170 WEST 3RD STREET
2ND FLOOR
SAN BERNARDINO, CA 92410

AECOM
999 W. TOWN & COUNTRY RD
ORANGE, CA 92868

"177" TABLE OF REINFORCING STEEL DIMENSIONS AND DATA (RW TYPE 1 MOD)	
Design H	10'-0"
W	13'-0"
C	7'-0"
B	6'-0"
F Spread Footing	1'-4"
Batter	1/2:12
(a) Bars	#7 @ 12
Long (b) Bars	#8 @ 12
Y (Long)	8'-8"
Short (b) Bars	#6 @ 14
Y	7'-8"
(c) Bars	#8 @ 12
Toe Pressure ksf	2.02

GENERAL NOTES:

1. For Footing Step details, Approximate Wall Offset Values, and drainage notes, see (B3-8)
2. Footing Cover = 1'-6" minimum
3. No splices allowed in wall backface reinforcement within bottom third of design height.

Cont = Continuous

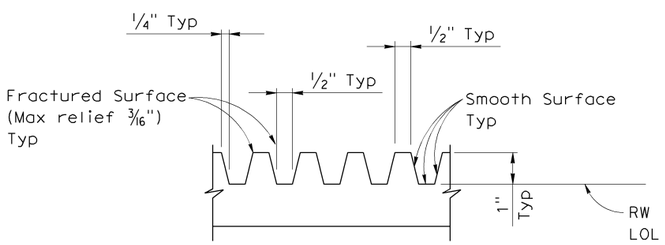

FRACTURED RIB TEXTURE

Not To Scale

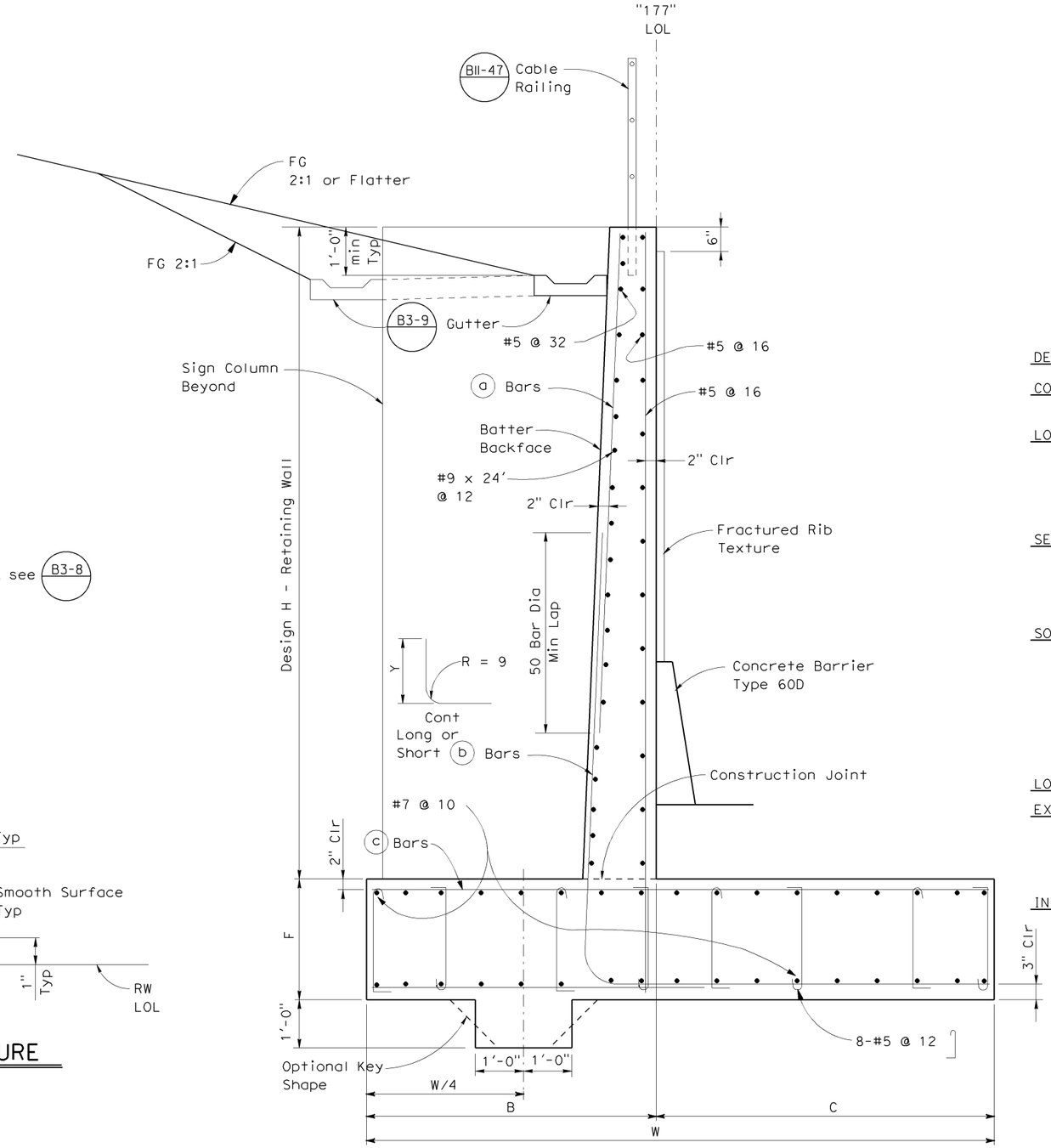

SPREAD FOOTING SECTION "177"

3/4"=1'-0"

DESIGN DATA

DESIGN: Load Factor Design (LFD)

CONCRETE: Reinforced Concrete, f'c = 3600 psi
fy = 60,000 psi

LOADING CASE: Level Ground with 0 psf
Live Load Surcharge
Seismic Load (Sign) = 0.57 DL
Wind Load = 33 psf
Dead Load of Sign & Lighting = 6.78 k

SEISMIC LOAD: SOIL
kh = 0.0 g
kv = 0
kae = Mononobe-Okabe Method

SOIL: Ø = 32° y = 120 pcf
Equivalent Fluid Pressure:
= 37 pcf for determination of toe pressure
Q=2500psi

LOAD COMBINATIONS:

EXTERNAL STABILITY: (For Overturning, Sliding)

Group 1: D + E + SC (F.S. Sliding > 1.5) (e < B/6)
Group 2: D + E + SC + W (F.S. Sliding > 1.2) (e < B/6)

INTERNAL STABILITY: (For Member Design)

Group A: BD + 1.7E + 1.7SC
Group B: BD + 1.7E + 1.3W

where: B = 1.0 or 1.3 whichever controls design
D = Dead Load
E = Lateral Earth Pressure
SC = Live Load Surcharge
W = Wind Load

GEOTECHNICAL PROFESSIONAL APPROVAL DATE 05-10-07

DESIGN OVERSIGHT	SCALE:	VERT.DATUM NAVD 88	HORZ.DATUM NAD 83	DESIGN	BY R Ramoso/H Mai	CHECKED R Hawthorne	PREPARED FOR THE STATE OF CALIFORNIA DEPARTMENT OF TRANSPORTATION
	PHOTOGRAMMETRY AS OF:	ALIGNMENT TIES		DETAILS	BY C Morgan	CHECKED R Hawthorne	
	SURVEYED BY	DRAFTED BY		QUANTITIES	BY R Ramoso/H Mai	CHECKED R Hawthorne	
SIGN OFF DATE	FIELD CHECKED BY	CHECKED BY					

Ed Kouzi
PROJECT ENGINEER

BRIDGE NO. XX-XXXX
KILOMETER POST XXX.X

RETAINING WALL 177
RETAINING WALL DETAILS NO.1

ORIGINAL SCALE IN MILLIMETERS FOR REDUCED PLANS 0 10 20 30 40 50 60 70 80 90 100

CU 08220
EA 0F1500

DISREGARD PRINTS BEARING EARLIER REVISION DATES

REVISION DATES (PRELIMINARY STAGE ONLY) YY-MM-DD

SHEET X OF XX

FILE => ...\0F15Qgb003.dgn

USERNAME => morganc3 DATE PLOTTED => 6/30/2009 TIME PLOTTED => 8:11:48 PM

DIST	COUNTY	ROUTE	KILOMETER POST TOTAL PROJECT	SHEET No	TOTAL SHEETS
8	SBd	10	33.3/R36.9	XX	XX

XX-XX-09
REGISTERED CIVIL ENGINEER

PLANS APPROVAL DATE

REGISTERED PROFESSIONAL ENGINEER
ROBERT E. HAWTHORNE
No. 40075
Exp. 03-31-10
CIVIL
STATE OF CALIFORNIA

The State of California or its officers or agents shall not be responsible for the accuracy or completeness of electronic copies of this plan sheet.

SANBAG
1170 WEST 3RD STREET
2ND FLOOR
SAN BERNARDINO, CA 92410

AECOM
999 W. TOWN & COUNTRY RD
ORANGE, CA 92868

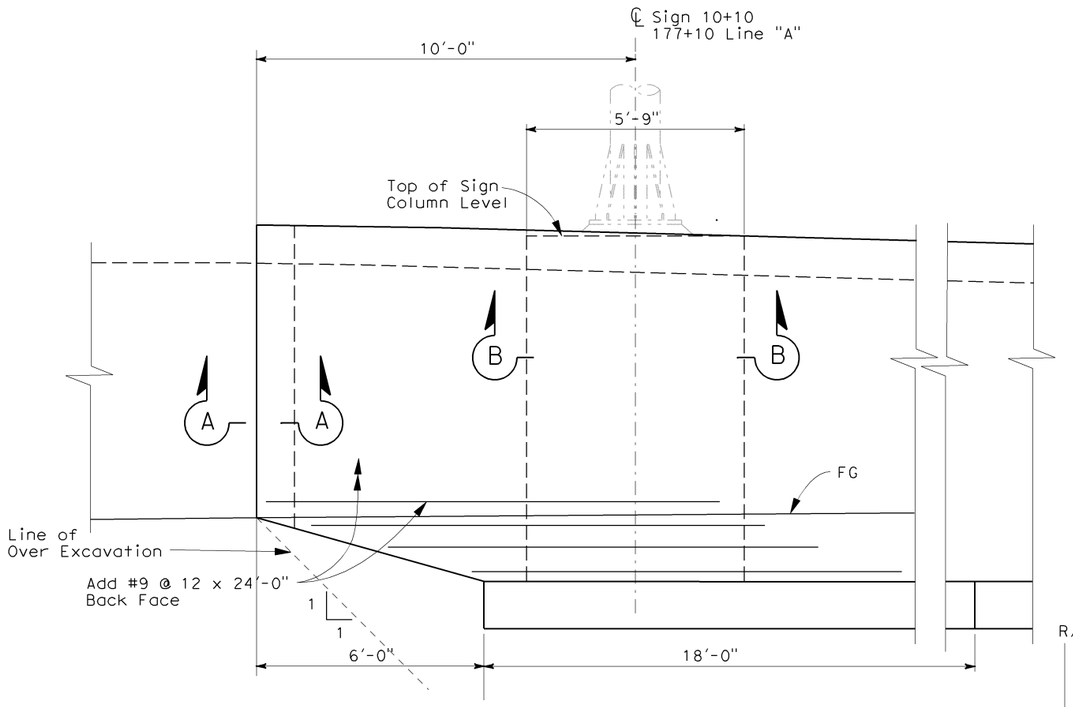

OVERHEAD SIGN AT RETAINING WALL
ELEVATION DETAIL A
½"=1'-0"

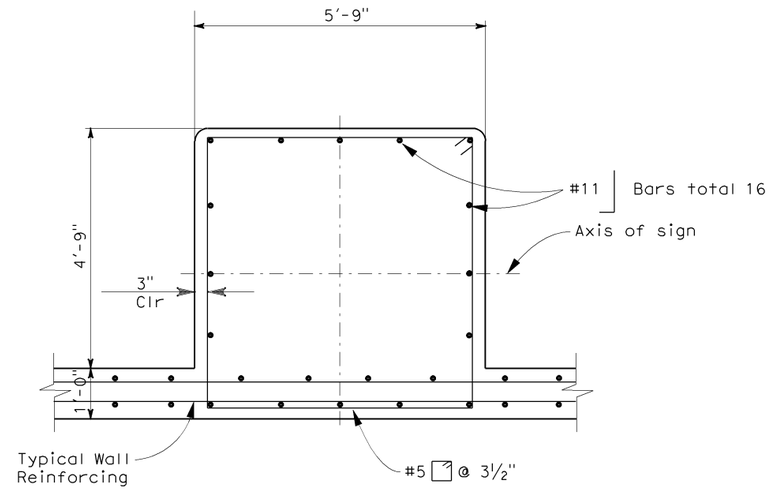

SECTION B-B
½"=1'-0"

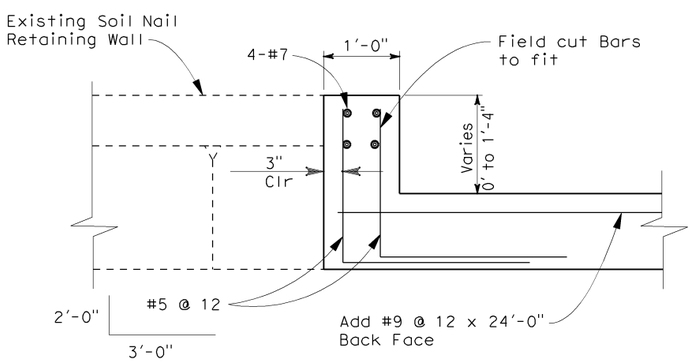

SECTION A-A
¾"=1'-0"

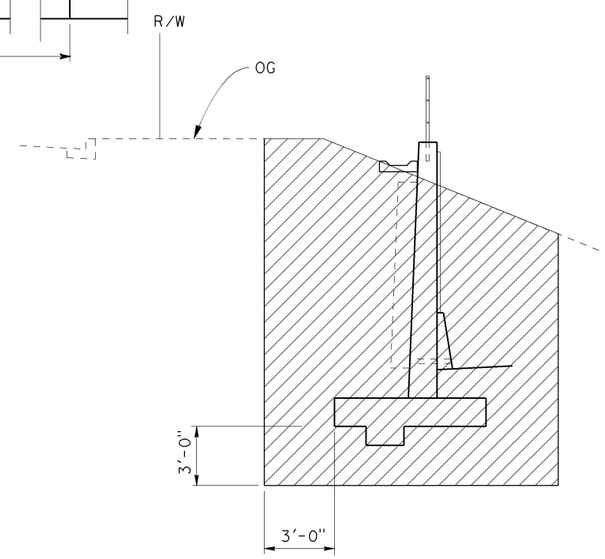

STRUCTURAL EXCAVATION
NTS

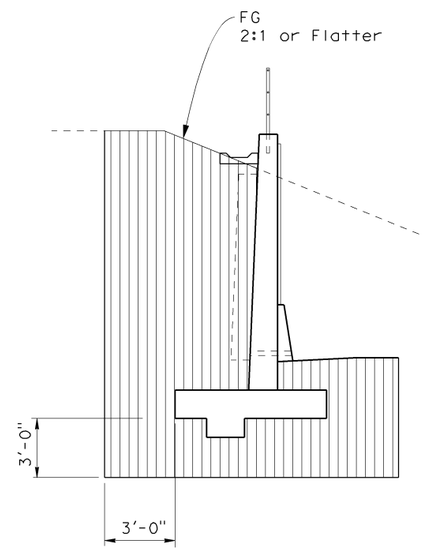

STRUCTURAL BACKFILL
NTS

Structural Excavation

Structural Backfill

05-10-07
GEOTECHNICAL PROFESSIONAL APPROVAL DATE

DESIGN OVERSIGHT	SCALE:	VERT.DATUM NAVD 88	HORZ.DATUM NAD 83	DESIGN	BY R Ramoso/H Mai	CHECKED R Hawthorne
	PHOTOGRAMMETRY AS OF:		ALIGNMENT TIES	DETAILS	BY C Morgan	CHECKED R Hawthorne
	SURVEYED	BY	DRAFTED BY	QUANTITIES	BY R Ramoso/H Mai	CHECKED R Hawthorne
SIGN OFF DATE	FIELD CHECKED	BY	CHECKED BY			

PREPARED FOR THE STATE OF CALIFORNIA DEPARTMENT OF TRANSPORTATION

Ed Kouzi
PROJECT ENGINEER

BRIDGE NO. XX-XXXX
KILOMETER POST XXX.X

RETAINING WALL 177
RETAINING WALL DETAILS NO.2

ORIGINAL SCALE IN MILLIMETERS FOR REDUCED PLANS 0 10 20 30 40 50 60 70 80 90 100

CU 08220
EA 0F1500

DISREGARD PRINTS BEARING EARLIER REVISION DATES

REVISION DATES (PRELIMINARY STAGE ONLY) X-X-XX

SHEET X OF XX

FILE => ...\0F150qb004.dgn

USERNAME => morganc3 DATE PLOTTED => 6/30/2009 TIME PLOTTED => 8:14:58 PM

DIST	COUNTY	ROUTE	KILOMETER POST TOTAL PROJECT	SHEET No	TOTAL SHEETS
8	SBd	10	33.3/R36.9	XXX	XXX

REGISTERED CIVIL ENGINEER ------09

PLANS APPROVAL DATE

REGISTERED PROFESSIONAL ENGINEER ROBERT E. HAWTHORNE No. 40075 Exp. 03/31/10 CIVIL STATE OF CALIFORNIA

The State of California or its officers or agents shall not be responsible for the accuracy or completeness of electronic copies of this plan sheet.

SANBAG
1170 WEST 3RD STREET
2ND FLOOR
SAN BERNARDINO, CA 92410

AECOM
999 W. TOWN & COUNTRY RD
ORANGE, CA 92868

CURVE DATA

NO.	R	Δ	T	L
A	7881.61	00°52'21"	60.00	120.00

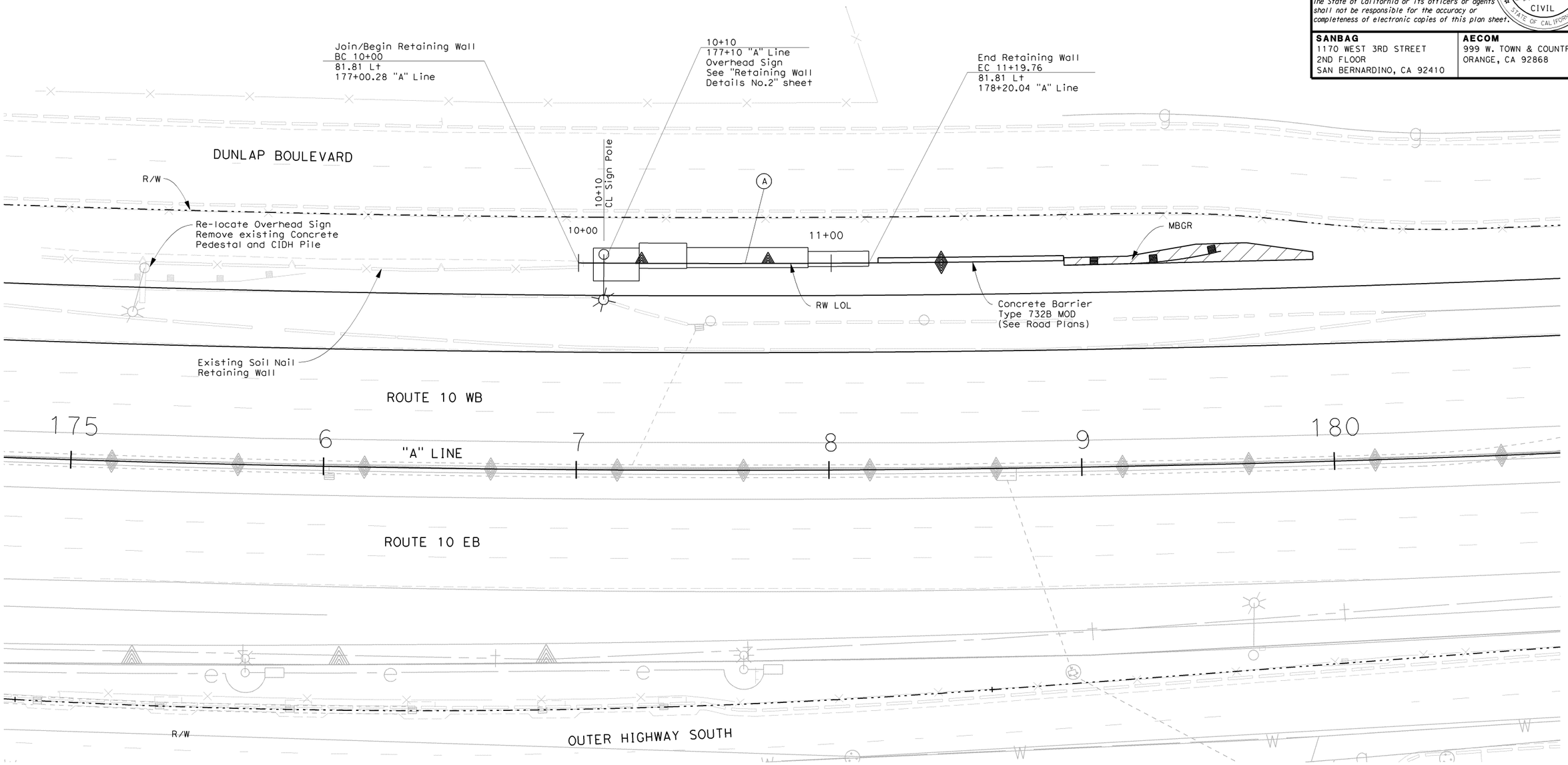

FOOTING LAYOUT

SCALE 1"=20'

N

GEOTECHNICAL PROFESSIONAL APPROVAL DATE

DESIGN OVERSIGHT	SCALE:	VERT.DATUM NAVD 88	HORZ.DATUM NAD 83	DESIGN	BY R Ramoso/H Mai	CHECKED R Hawthorne
	PHOTOGRAMMETRY AS OF:		ALIGNMENT TIES	DETAILS	BY C Morgan	CHECKED R Hawthorne
SIGN OFF DATE	SURVEYED	BY	DRAFTED BY	QUANTITIES	BY R Ramoso/H Mai	CHECKED R Hawthorne
	FIELD CHECKED	BY	CHECKED BY			

FOUNDATION PLAN SHEET (METRIC) (REV. 10/27/05)

ORIGINAL SCALE IN MILLIMETERS FOR REDUCED PLANS 0 10 20 30 40 50 60 70 80 90 100

PREPARED FOR THE STATE OF CALIFORNIA DEPARTMENT OF TRANSPORTATION

Ed Kouzi
PROJECT ENGINEER

CU 08220
EA 0F1500

BRIDGE NO. --
KILOMETER POST --

RETAINING WALL 177
FOUNDATION PLAN

DISREGARD PRINTS BEARING EARLIER REVISION DATES

REVISION DATES (PRELIMINARY STAGE ONLY)

SHEET X OF XX

FILE => ...\0F150qb005.dgn

USERNAME => morganc3 DATE PLOTTED => 6/30/2009 TIME PLOTTED => 8:53:48 PM

DIST	COUNTY	ROUTE	POST MILES TOTAL PROJECT	SHEET No	TOTAL SHEETS
8	SBd	10	33.3/R36.9	XXX	

REGISTERED CIVIL ENGINEER X DATE

PLANS APPROVAL DATE

REGISTERED PROFESSIONAL ENGINEER CRAIG P. LESZKIEWICZ No. 67419 Exp. 12/31/2010 CIVIL STATE OF CALIFORNIA

The State of California or its officers or agents shall not be responsible for the accuracy or completeness of electronic copies of this plan sheet.

SANBAG
1170 WEST 3RD STREET, 2ND FLOOR
SAN BERNARDINO, CA 92410

CH2M HILL
2280 MARKET STREET, SUITE 200
RIVERSIDE, CA 92501

Notes:

1. This LOTB sheet was prepared in accordance with the Caltrans Soil & Rock Logging, Classification, and Presentation Manual.

2. .38" and 2.36" diameter samples were taken alternately using a split-spoon sampler and a modified California split barrel sampler, respectively. The California modified split barrel sampler has an inside diameter (I.D.) of 2.36" and the outside diameter (O.D.) of 3.00". The split-spoon sampler has an I.D. of 1.38" and an outside diameter of 2.00".

   An automatic trip hammer system was used to advance the drive and SPT samplers.

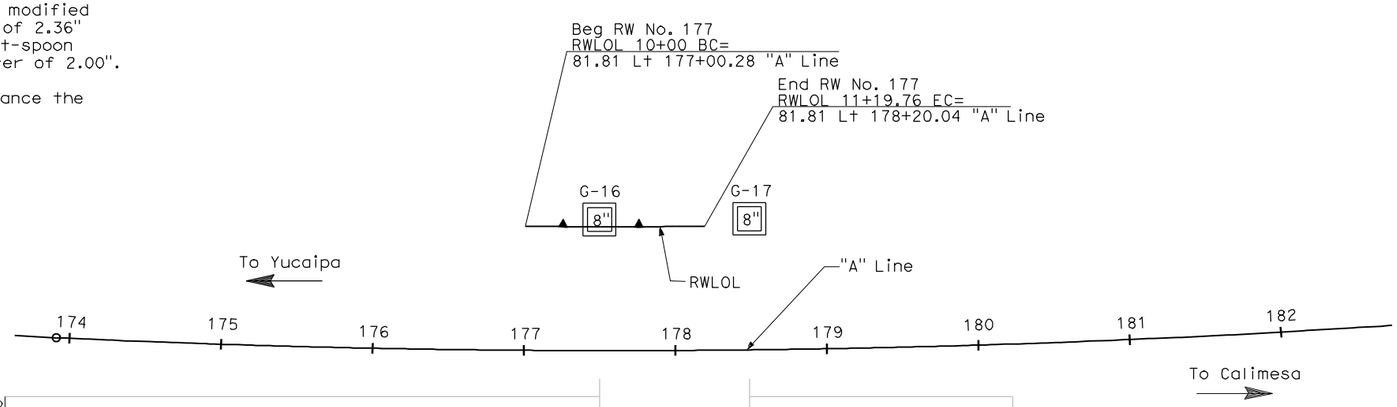

PLAN

1"=50'

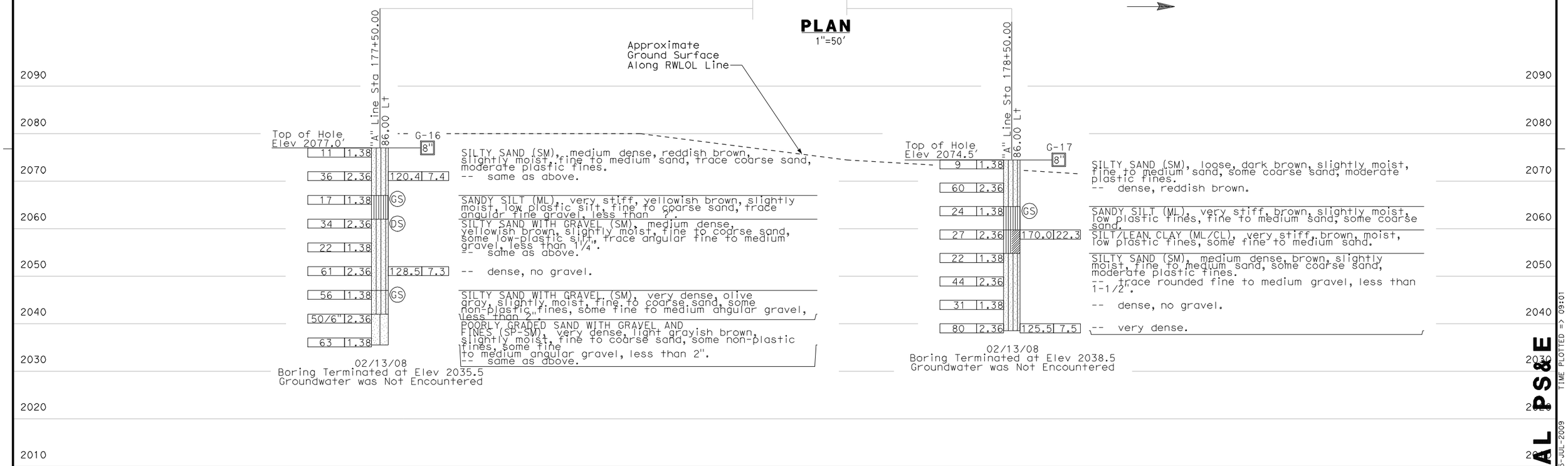

PROFILE

Horiz 1"=50'
Vert 1"=10'

Stationing Along "A" Line

174 175 176 177 178 179 180 181 182

INITIAL PS&E

USERNAME => atruong DATE PLOTTED => 15-JUL-2009 TIME PLOTTED => 09:01

Robert Zezoff DESIGN OVERSIGHT	DRAWN BY	A. Gorden	C. Leszkiewicz FIELD INVESTIGATION BY:	PREPARED FOR THE STATE OF CALIFORNIA DEPARTMENT OF TRANSPORTATION	Mohammed Atiqullah PROJECT ENGINEER
X SIGN OFF DATE	CHECKED BY	X	DATE 02/13/08		

BRIDGE NO. --
POST MILES 33.93

RETAINING WALL No. 177

LOG OF TEST BORINGS

ORIGINAL SCALE IN INCHES FOR REDUCED PLANS 0 1 2 3

CU 08220
EA 0F1500

DISREGARD PRINTS BEARING EARLIER REVISION DATES 06/26/09

REVISION DATES

SHEET 1 OF 12

FILE => 0F150qb006.dgn

DIST	COUNTY	ROUTE	KILOMETER POST TOTAL PROJECT	SHEET No	TOTAL SHEETS
8	SBd	10	33.3/R36.9	XXX	XXX

REGISTERED CIVIL ENGINEER ------09

PLANS APPROVAL DATE

REGISTERED PROFESSIONAL ENGINEER ROBERT E. HAWTHORNE No. 40075 Exp. 03/31/10 CIVIL STATE OF CALIFORNIA

The State of California or its officers or agents shall not be responsible for the accuracy or completeness of electronic copies of this plan sheet.

SANBAG
1170 WEST 3RD STREET
2ND FLOOR
SAN BERNARDINO, CA 92410

AECOM
999 W. TOWN & COUNTRY RD
ORANGE, CA 92868

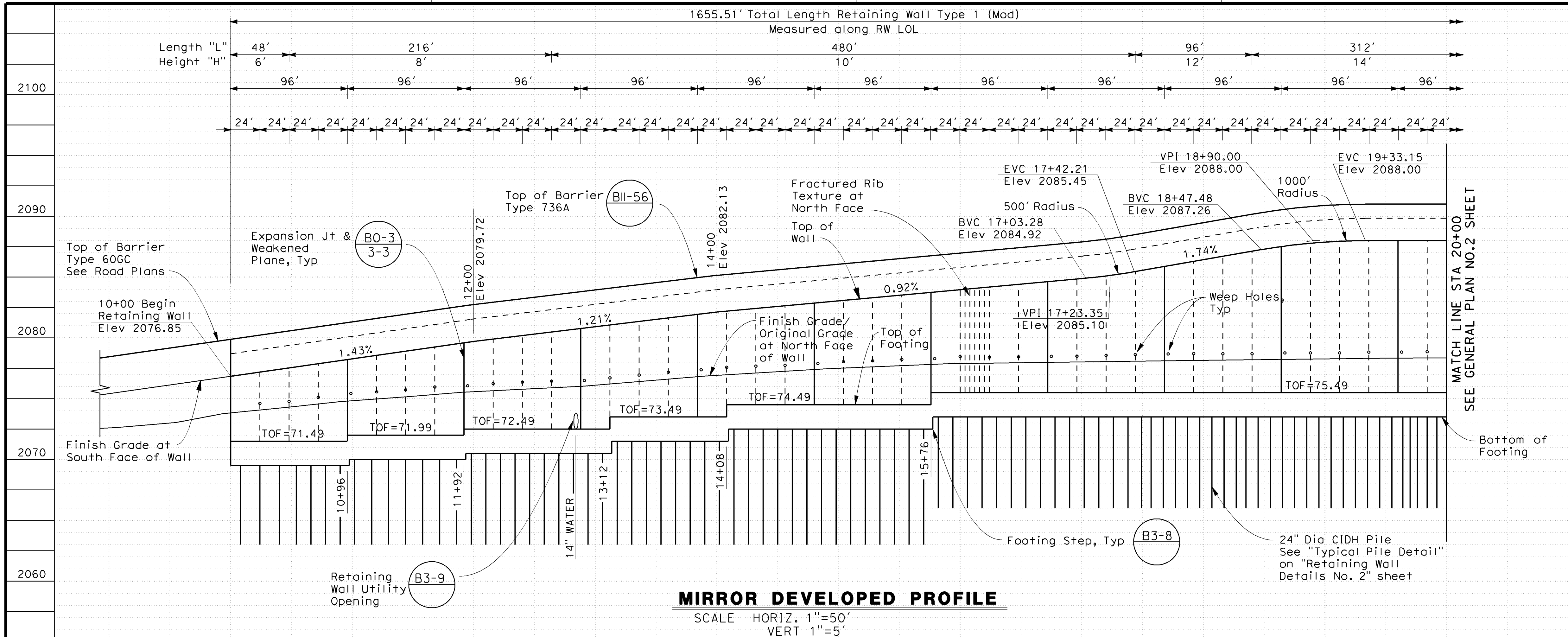

MIRROR DEVELOPED PROFILE

SCALE HORIZ. 1"=50'
VERT 1"=5'

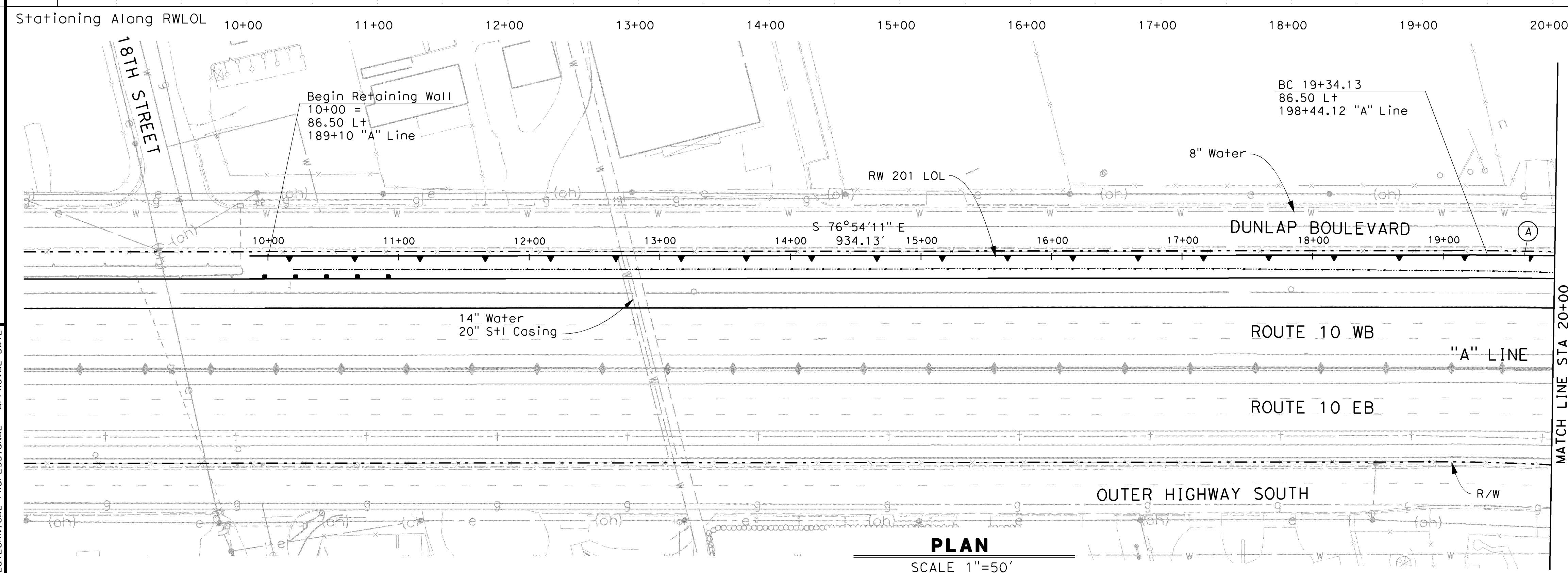

PLAN

SCALE 1"=50'

CURVE DATA

NO.	R	Δ	T	L
A	2999.59	12°21'55"	183.45	366.44

ESTIMATED QUANTITIES

Structure Excavation (Retaining Wall)	3574	CY
Structure Backfill (Retaining Wall)	5271	CY
Pervious Backfill Material (Retaining Wall)	200	CY
24" Cast-In-Drilled Hole Concrete Piling	11512	LF
Structural Concrete (Retaining Wall)	1894	CY
Anti-Graffitti Coating	25632	SF
Fractured Rib Texture	14004	SF
Bar Reinforcing Steel (Retaining Wall)	864008	LB
Concrete Barrier Type 736A	1656	LF

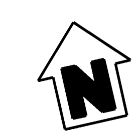

SCALE 1"=50'

GEOTECHNICAL PROFESSIONAL APPROVAL DATE

SCALE:	VERT.DATUM NAVD 88	HORZ.DATUM NAD 83
PHOTOGRAMMETRY AS OF:	ALIGNMENT TIES	
SURVEYED BY	DRAFTED BY	
FIELD CHECKED BY	CHECKED BY	

DESIGN OVERSIGHT

SIGN OFF DATE

	BY	CHECKED
DESIGN	R Ramoso/H Mai	R Hawthorne
DETAILS	C Morgan	R Hawthorne
QUANTITIES	R Ramoso/H Mai	R Hawthorne

PREPARED FOR THE **STATE OF CALIFORNIA** DEPARTMENT OF TRANSPORTATION

Ed Kouzi
PROJECT ENGINEER

BRIDGE NO. --
KILOMETER POST --

RETAINING WALL 201
GENERAL PLAN NO. 1

DIST	COUNTY	ROUTE	KILOMETER POST TOTAL PROJECT	SHEET No	TOTAL SHEETS
8	SBd	10	33.3/R36.9	XXX	XXX

REGISTERED CIVIL ENGINEER ------09

PLANS APPROVAL DATE

REGISTERED PROFESSIONAL ENGINEER ROBERT E. HAWTHORNE No. 40075 Exp. 03/31/10 CIVIL STATE OF CALIFORNIA

The State of California or its officers or agents shall not be responsible for the accuracy or completeness of electronic copies of this plan sheet.

SANBAG
1170 WEST 3RD STREET
2ND FLOOR
SAN BERNARDINO, CA 92410

AECOM
999 W. TOWN & COUNTRY RD
ORANGE, CA 92868

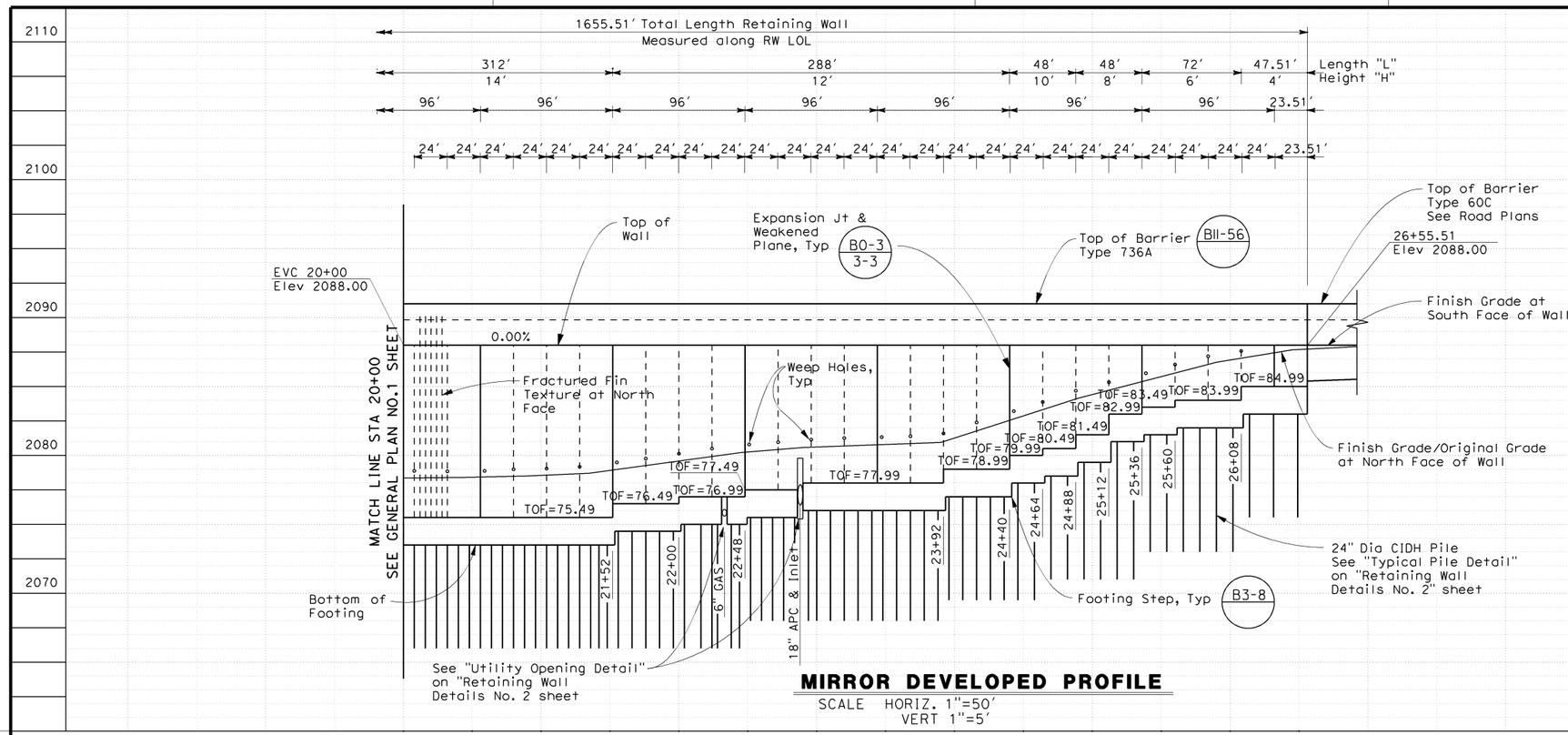

MIRROR DEVELOPED PROFILE

SCALE HORIZ. 1"=50'
VERT 1"=5'

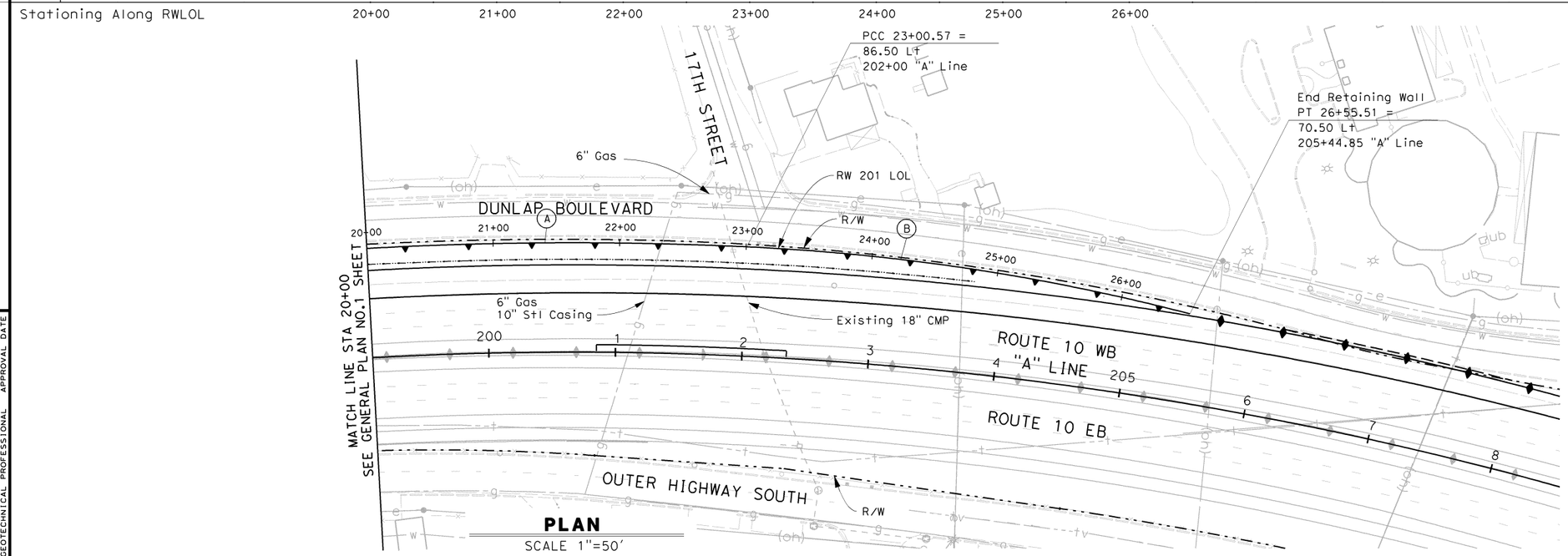

PLAN

SCALE 1"=50'

CURVE DATA

NO.	R	Δ	T	L
A	2999.59	06°59'58"	183.45	366.44
B	1701.50	11°57'08"	178.12	354.94

SCALE 1"=50'

GEOTECHNICAL PROFESSIONAL APPROVAL DATE

DESIGN OVERSIGHT	SCALE:	VERT.DATUM NAVD 88	HORZ.DATUM NAD 83	DESIGN	BY R Ramoso/H Mai	CHECKED R Hawthorne
	PHOTOGRAMMETRY AS OF:		ALIGNMENT TIES	DETAILS	BY C Morgan	CHECKED R Hawthorne
SIGN OFF DATE	SURVEYED	BY	DRAFTED BY	QUANTITIES	BY R Ramoso/H Mai	CHECKED R Hawthorne
	FIELD CHECKED	BY	CHECKED BY			

FOUNDATION PLAN SHEET (METRIC) (REV. 10/27/05)

ORIGINAL SCALE IN MILLIMETERS FOR REDUCED PLANS 0 10 20 30 40 50 60 70 80 90 100

PREPARED FOR THE STATE OF CALIFORNIA DEPARTMENT OF TRANSPORTATION

Ed Kouzi
PROJECT ENGINEER

CU 08220
EA 0F1500

BRIDGE NO. --
KILOMETER POST --

DISREGARD PRINTS BEARING EARLIER REVISION DATES

REVISION DATES (PRELIMINARY STAGE ONLY)

SHEET X OF XX

FILE => ...\0F150qc002.dgn

USERNAME => morganc3 DATE PLOTTED => 6/30/2009 TIME PLOTTED => 8:27:30 PM

DIST	COUNTY	ROUTE	KILOMETER POST TOTAL PROJECT	SHEET No	TOTAL SHEETS
8	SBd	10	33.3/R36.9	XX	XX

XX-XX-09
REGISTERED CIVIL ENGINEER

PLANS APPROVAL DATE

REGISTERED PROFESSIONAL ENGINEER
ROBERT E. HAWTHORNE
No. 40075
Exp. 03-31-10
CIVIL
STATE OF CALIFORNIA

The State of California or its officers or agents shall not be responsible for the accuracy or completeness of electronic copies of this plan sheet.

SANBAG
1170 WEST 3RD STREET
2ND FLOOR
SAN BERNARDINO, CA 92410

AECOM
999 W. TOWN & COUNTRY RD
ORANGE, CA 92868

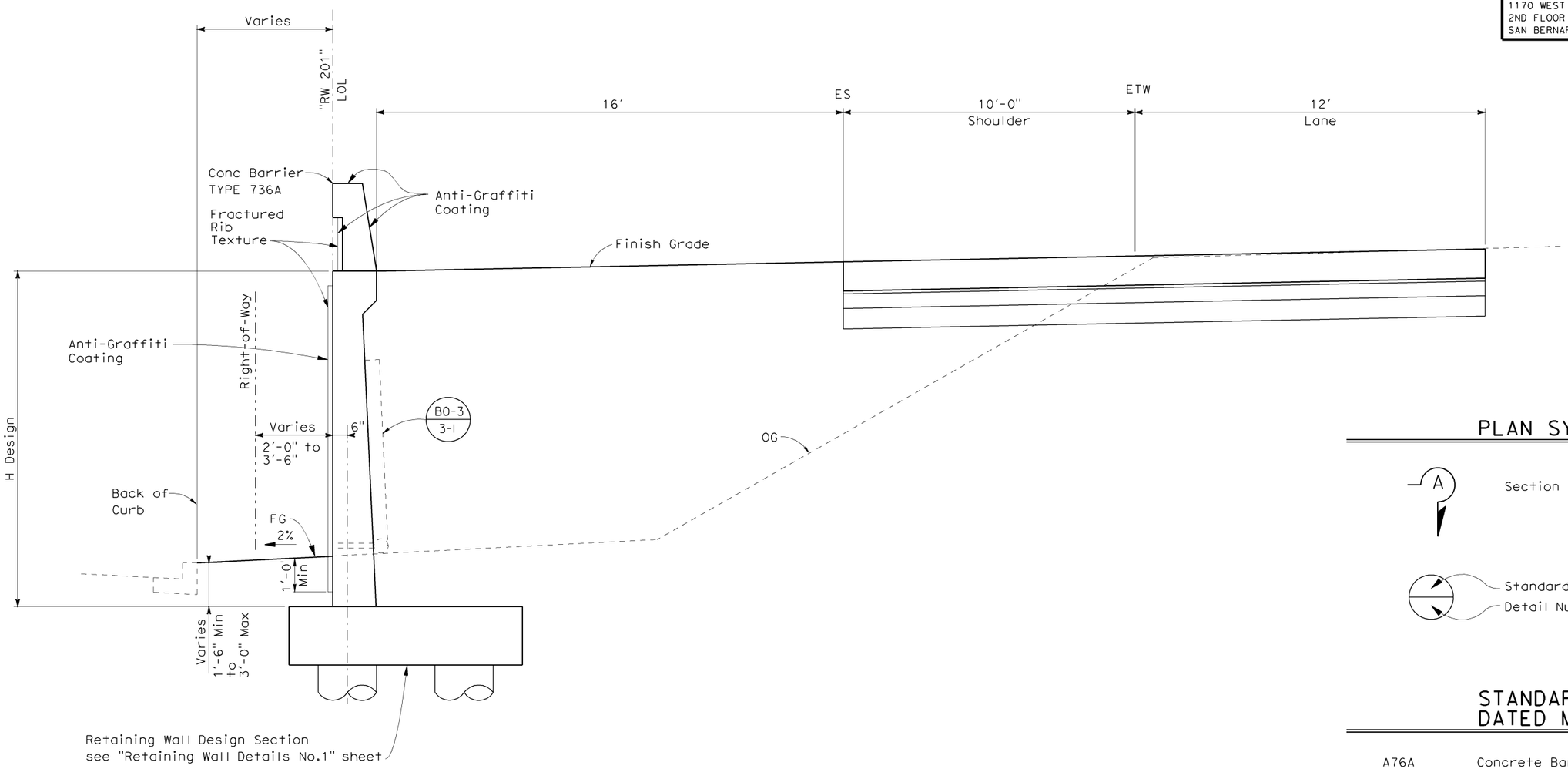

TYPICAL SECTION RETAINING WALL 201

1/2"=1'-0"

PLAN SYMBOLS

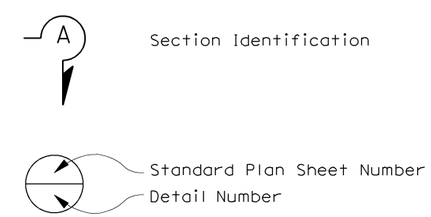

STANDARD PLANS DATED MAY 2006

A76A	Concrete Barrier Type 60
B0-3	Bridge Details
B3-1	Retaining Wall Type 1 - H = 4' Through 30'
B3-8	Retaining Wall Details No.1
B3-9	Retaining Wall Details No.2
B11-56	Concrete Barrier Type 736
A62B	Limits of Payment for Excavation and Backfill Bridge Surcharge and Wall

05-10-07
GEOTECHNICAL PROFESSIONAL APPROVAL DATE

DESIGN OVERSIGHT

SIGN OFF DATE

SCALE:	VERT.DATUM NAVD 88	HORZ.DATUM NAD 83
PHOTOGRAMMETRY AS OF:	ALIGNMENT TIES	
SURVEYED BY	DRAFTED BY	
FIELD CHECKED BY	CHECKED BY	

	BY	CHECKED
DESIGN	R Ramoso/H Mai	R Hawthorne
DETAILS	C Morgan	R Hawthorne
QUANTITIES	R Ramoso/H Mai	R Hawthorne

ORIGINAL SCALE IN MILLIMETERS FOR REDUCED PLANS 0 10 20 30 40 50 60 70 80 90 100

PREPARED FOR THE STATE OF CALIFORNIA DEPARTMENT OF TRANSPORTATION

Ed Kouzi
PROJECT ENGINEER

CU 08220
EA 0F1500

FILE => ...\0F150qc003.dgn

BRIDGE NO. XX-XXXX
KILOMETER POST XXX.X

RETAINING WALL 201
TYPICAL SECTION

DISREGARD PRINTS BEARING EARLIER REVISION DATES

REVISION DATES (PRELIMINARY STAGE ONLY) YY-XX

SHEET X OF XX

USERNAME => margonc3 DATE PLOTTED => 6/30/2009 TIME PLOTTED => 8:31:27 PM

DIST	COUNTY	ROUTE	KILOMETER POST TOTAL PROJECT	SHEET No	TOTAL SHEETS
8	SBd	10	33.3/R36.9	XX	XX

XX-XX-09
REGISTERED CIVIL ENGINEER

PLANS APPROVAL DATE

REGISTERED PROFESSIONAL ENGINEER ROBERT E. HAWTHORNE No. 40075 Exp. 03-31-10 CIVIL STATE OF CALIFORNIA

The State of California or its officers or agents shall not be responsible for the accuracy or completeness of electronic copies of this plan sheet.

SANBAG
1170 WEST 3RD STREET
2ND FLOOR
SAN BERNARDINO, CA 92410

AECOM
999 W. TOWN & COUNTRY RD
ORANGE, CA 92868

"201" TABLE OF REINFORCING STEEL DIMENSIONS AND DATA							
Design H	4'-0"	6'-0"	8'-0"	10'-0"	12'-0"	14'-0"	16'-0"
W	10'-0"	10'-0"	10'-0"	10'-0"	10'-0"	10'-0"	10'-0"
C	1'-6"	1'-6"	1'-6"	1'-6"	1'-6"	1'-6"	1'-6"
B	8'-6"	8'-6"	8'-6"	8'-6"	8'-6"	8'-6"	8'-6"
F Spread Footing	2'-0"	2'-0"	2'-0"	2'-0"	2'-0"	2'-0"	2'-0"
Batter	1/2:12	1/2:12	1/2:12	1/2:12	1/2:12	1/2:12	1/2:12
(b) Bars	-----	-----	-----	-----	#8 @ 12	#8 @ 12	#9 @ 12
(c) Bars	#8 @ 12	#8 @ 9	#8 @ 8	#8 @ 12	#8 @ 12	#9 @ 12	#10 @ 14
Short (c) Bars	-----	-----	-----	#8 @ 12	#8 @ 12	#9 @ 12	#10 @ 14
(d) Bars	#6 @ 12	#6 @ 10	#6 @ 8	#6 @ 6	#9 @ 12	#9 @ 8	#9 @ 8

GENERAL NOTES:

1. For Footing Step details, Approximate Wall Offset Values, and drainage notes, see B3-8
2. Footing Cover = 1'-6" minimum
3. No splices allowed in wall backface reinforcement within bottom third of design height.
4. For Wall Elevation See B3-1 Retaining Wall Type 1 H +/- 4' Through 30'
5. Lap Top Footing bars @ Midspan and Lap Bottom Footing bars @ Centerline Pile.

Cont = Continuous

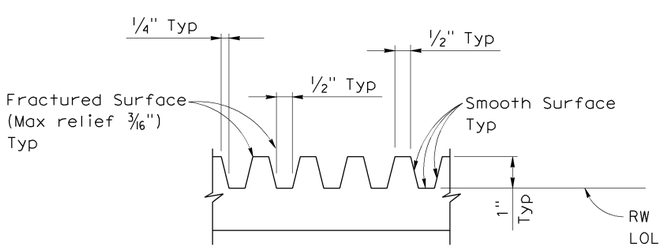

FRACTURED RIB TEXTURE

Not To Scale

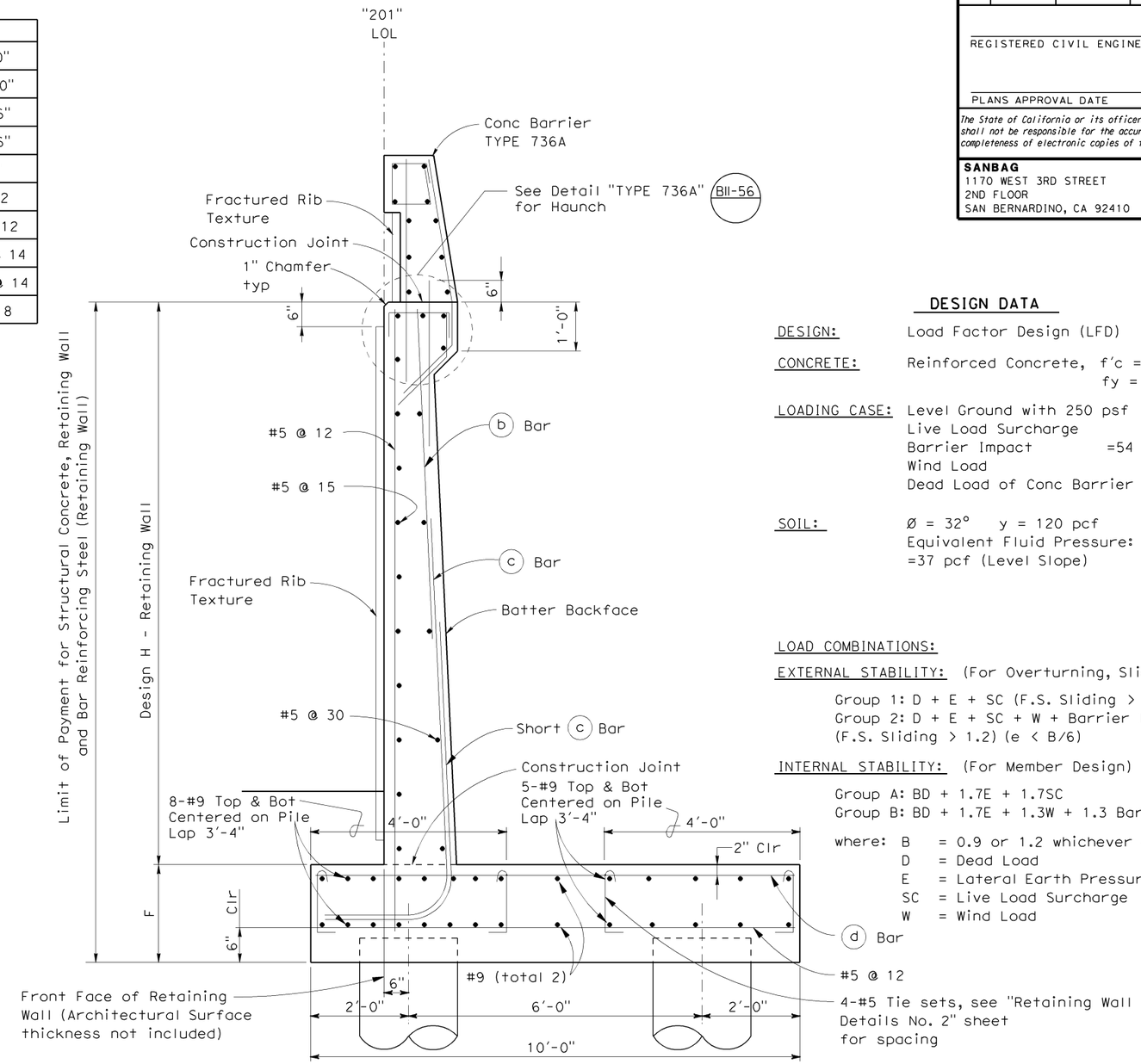

SPREAD FOOTING SECTION "201"

3/4"=1'-0"

DESIGN DATA

DESIGN: Load Factor Design (LFD)

CONCRETE: Reinforced Concrete, f'c = 3600 psi
fy = 6000 psi

LOADING CASE: Level Ground with 250 psf
Live Load Surcharge
Barrier Impact =54 k (14.4' distribution)
Wind Load = 33 psf
Dead Load of Conc Barrier = 450 plf

SOIL: Ø = 32° y = 120 pcf
Equivalent Fluid Pressure:
=37 pcf (Level Slope)

LOAD COMBINATIONS:

EXTERNAL STABILITY: (For Overturning, Sliding)

Group 1: D + E + SC (F.S. Sliding > 1.5) (e < B/6)
Group 2: D + E + SC + W + Barrier Impact
(F.S. Sliding > 1.2) (e < B/6)

INTERNAL STABILITY: (For Member Design)

Group A: BD + 1.7E + 1.7SC
Group B: BD + 1.7E + 1.3W + 1.3 Barrier

where: B = 0.9 or 1.2 whichever controls design
D = Dead Load
E = Lateral Earth Pressure
SC = Live Load Surcharge
W = Wind Load

GEOTECHNICAL PROFESSIONAL APPROVAL DATE 05-10-07

DESIGN OVERSIGHT	SCALE:	VERT.DATUM NAVD 88	HORZ.DATUM NAD 83	DESIGN	BY R Ramoso/H Mai	CHECKED R Hawthorne	PREPARED FOR THE STATE OF CALIFORNIA DEPARTMENT OF TRANSPORTATION	Ed Kouzi PROJECT ENGINEER
	PHOTOGRAMMETRY AS OF:	ALIGNMENT TIES		DETAILS	BY C Morgan	CHECKED R Hawthorne		
	SURVEYED BY	DRAFTED BY		QUANTITIES	BY R Ramoso/H Mai	CHECKED R Hawthorne		
SIGN OFF DATE	FIELD CHECKED BY	CHECKED BY						

BRIDGE NO. XX-XXXX
KILOMETER POST XXX.X

RETAINING WALL 201
RETAINING WALL DETAILS NO.1

ORIGINAL SCALE IN MILLIMETERS FOR REDUCED PLANS 0 10 20 30 40 50 60 70 80 90 100

CU 08220
EA 0F1500

DISREGARD PRINTS BEARING EARLIER REVISION DATES

REVISION DATES (PRELIMINARY STAGE ONLY) | SHEET X | OF XX

FILE => ...\0F15Qgc004.dgn

USERNAME => morgonc3 DATE PLOTTED => 6/30/2009 TIME PLOTTED => 8:33:20 PM

DIST	COUNTY	ROUTE	KILOMETER POST TOTAL PROJECT	SHEET No	TOTAL SHEETS
8	SBd	10	33.3/R36.9	XX	XX

XX-XX-09
REGISTERED CIVIL ENGINEER

PLANS APPROVAL DATE

REGISTERED PROFESSIONAL ENGINEER
ROBERT E. HAWTHORNE
No. 40075
Exp. 03-31-10
CIVIL
STATE OF CALIFORNIA

The State of California or its officers or agents shall not be responsible for the accuracy or completeness of electronic copies of this plan sheet.

SANBAG
1170 WEST 3RD STREET
2ND FLOOR
SAN BERNARDINO, CA 92410

AECOM
999 W. TOWN & COUNTRY RD
ORANGE, CA 92868

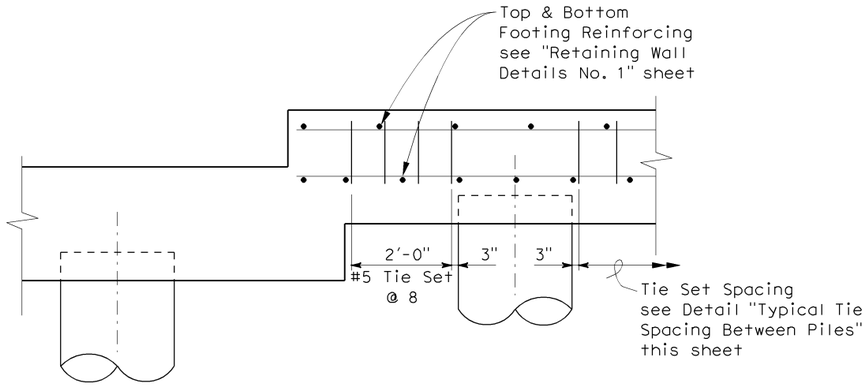

TYPICAL EDGE TIE SPACING

¾"=1'-0"

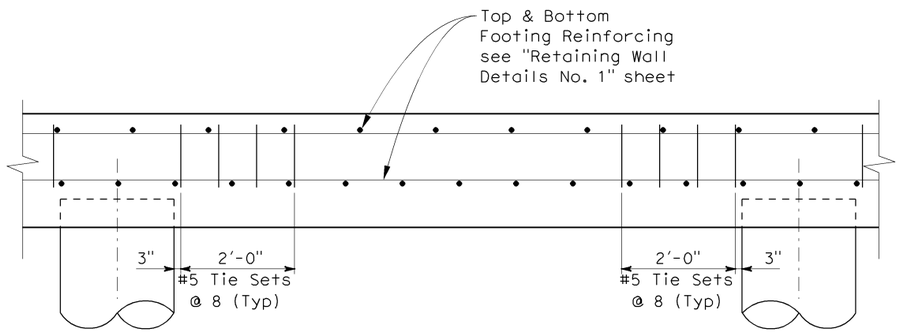

TYPICAL TIE SPACING BTWN PILES

¾"=1'-0"

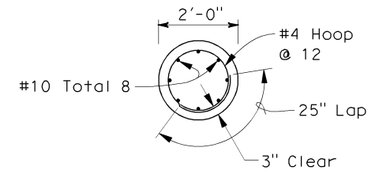

SECTION B-B

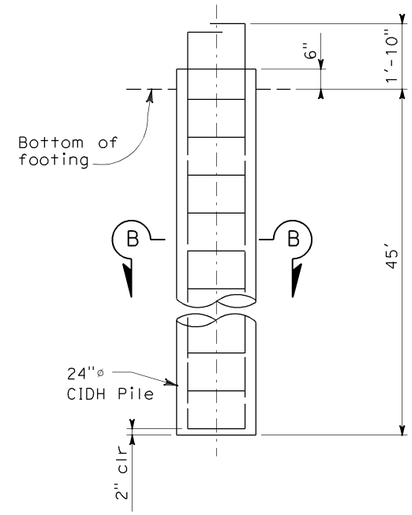

TYPICAL PILE DETAIL

½"=1'-0"

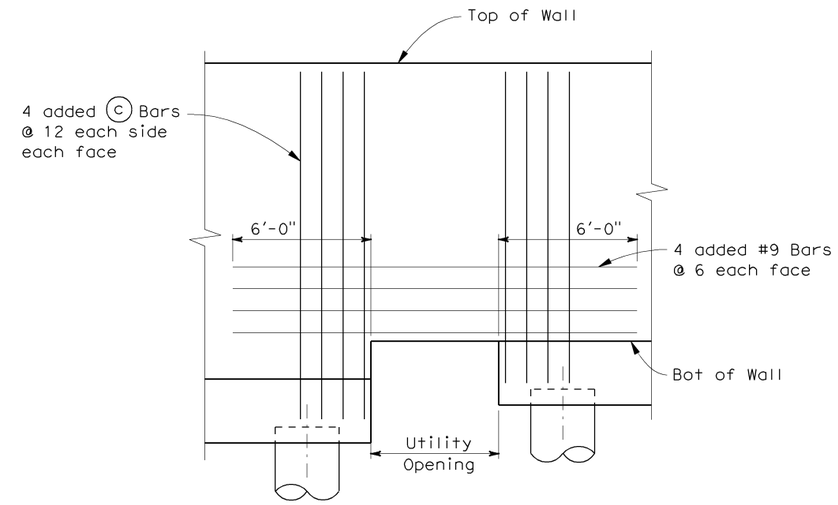

SECTION A-A

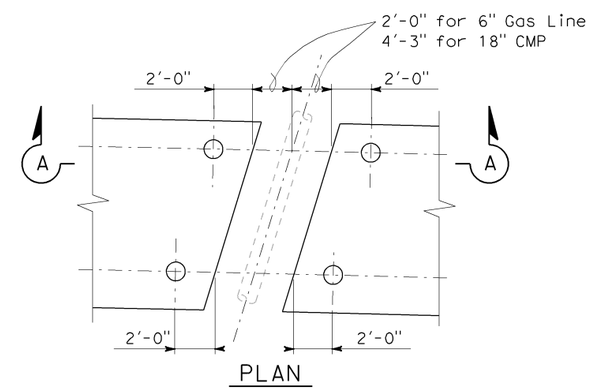

PLAN

UTILITY OPENING DETAIL

No Scale

PILE DATA TABLE

Location	Pile Type	Design Loading	Nominal Resistance		Pile Length Below Cap
			Compression	Tension	
RW 201	24" CIDH	280 k	280 k	140 k	L=45

GEOTECHNICAL PROFESSIONAL APPROVAL DATE 05-10-07

DESIGN OVERSIGHT	SCALE:	VERT.DATUM NAVD 88	HORZ.DATUM NAD 83	DESIGN	BY R Ramoso/H Mai	CHECKED R Hawthorne
	PHOTOGRAMMETRY AS OF:		ALIGNMENT TIES	DETAILS	BY C Morgan	CHECKED R Hawthorne
SIGN OFF DATE	SURVEYED	BY	DRAFTED BY	QUANTITIES	BY R Ramoso/H Mai	CHECKED R Hawthorne
	FIELD CHECKED	BY	CHECKED BY			

ORIGINAL SCALE IN MILLIMETERS FOR REDUCED PLANS 0 10 20 30 40 50 60 70 80 90 100

PREPARED FOR THE STATE OF CALIFORNIA DEPARTMENT OF TRANSPORTATION

Ed Kouzi
PROJECT ENGINEER

CU 08220
EA 0F1500

BRIDGE NO. XX-XXXX
KILOMETER POST XXX.X

RETAINING WALL 201
RETAINING WALL DETAILS NO.2

DISREGARD PRINTS BEARING EARLIER REVISION DATES

REVISION DATES (PRELIMINARY STAGE ONLY) X-X-XX

SHEET X OF XX

FILE => ...\0F150qc004b.dgn

USERNAME => morganc3 DATE PLOTTED => 6/30/2009 TIME PLOTTED => 8:34:52 PM

DIST	COUNTY	ROUTE	KILOMETER POST TOTAL PROJECT	SHEET No	TOTAL SHEETS
8	SBd	10	33.3/R36.9	XXX	XXX

REGISTERED CIVIL ENGINEER ------09

PLANS APPROVAL DATE

REGISTERED PROFESSIONAL ENGINEER ROBERT E. HAWTHORNE No. 40075 Exp. 03/31/10 CIVIL STATE OF CALIFORNIA

The State of California or its officers or agents shall not be responsible for the accuracy or completeness of electronic copies of this plan sheet.

SANBAG
1170 WEST 3RD STREET
2ND FLOOR
SAN BERNARDINO, CA 92410

AECOM
999 W. TOWN & COUNTRY RD
ORANGE, CA 92868

PLAN
SCALE 1"=20'

GEOTECHNICAL PROFESSIONAL APPROVAL DATE

DESIGN OVERSIGHT	SCALE:	VERT.DATUM NAVD 88	HORZ.DATUM NAD 83	DESIGN	BY R Ramoso/H Mai	CHECKED R Hawthorne	PREPARED FOR THE STATE OF CALIFORNIA DEPARTMENT OF TRANSPORTATION
	PHOTOGRAMMETRY AS OF:	ALIGNMENT TIES		DETAILS	BY C Morgan	CHECKED R Hawthorne	
SIGN OFF DATE	SURVEYED BY	DRAFTED BY		QUANTITIES	BY R Ramoso/H Mai	CHECKED R Hawthorne	
	FIELD CHECKED BY	CHECKED BY					

Ed Kouzi
PROJECT ENGINEER

BRIDGE NO. --
KILOMETER POST --

RETAINING WALL 201
FOUNDATION PLAN NO.1

FOUNDATION PLAN SHEET (METRIC) (REV. 10/27/05)

ORIGINAL SCALE IN MILLIMETERS FOR REDUCED PLANS 0 10 20 30 40 50 60 70 80 90 100

CU 08220
EA 0F1500

FILE => ...\0F150qc005.dgn

DISREGARD PRINTS BEARING EARLIER REVISION DATES

REVISION DATES (PRELIMINARY STAGE ONLY)

SHEET X OF XX

USERNAME => morgancc3 DATE PLOTTED => 6/30/2009 TIME PLOTTED => 8:37:04 PM

DIST	COUNTY	ROUTE	KILOMETER POST TOTAL PROJECT	SHEET No	TOTAL SHEETS
8	SBd	10	33.3/R36.9	XXX	XXX

REGISTERED CIVIL ENGINEER ------09

PLANS APPROVAL DATE

REGISTERED PROFESSIONAL ENGINEER ROBERT E. HAWTHORNE No. 40075 Exp. 03/31/10 CIVIL STATE OF CALIFORNIA

The State of California or its officers or agents shall not be responsible for the accuracy or completeness of electronic copies of this plan sheet.

SANBAG
1170 WEST 3RD STREET
2ND FLOOR
SAN BERNARDINO, CA 92410

AECOM
999 W. TOWN & COUNTRY RD
ORANGE, CA 92868

CURVE DATA

NO.	R	Δ	T	L
A	2999.59	12°21'55"	183.45	366.44

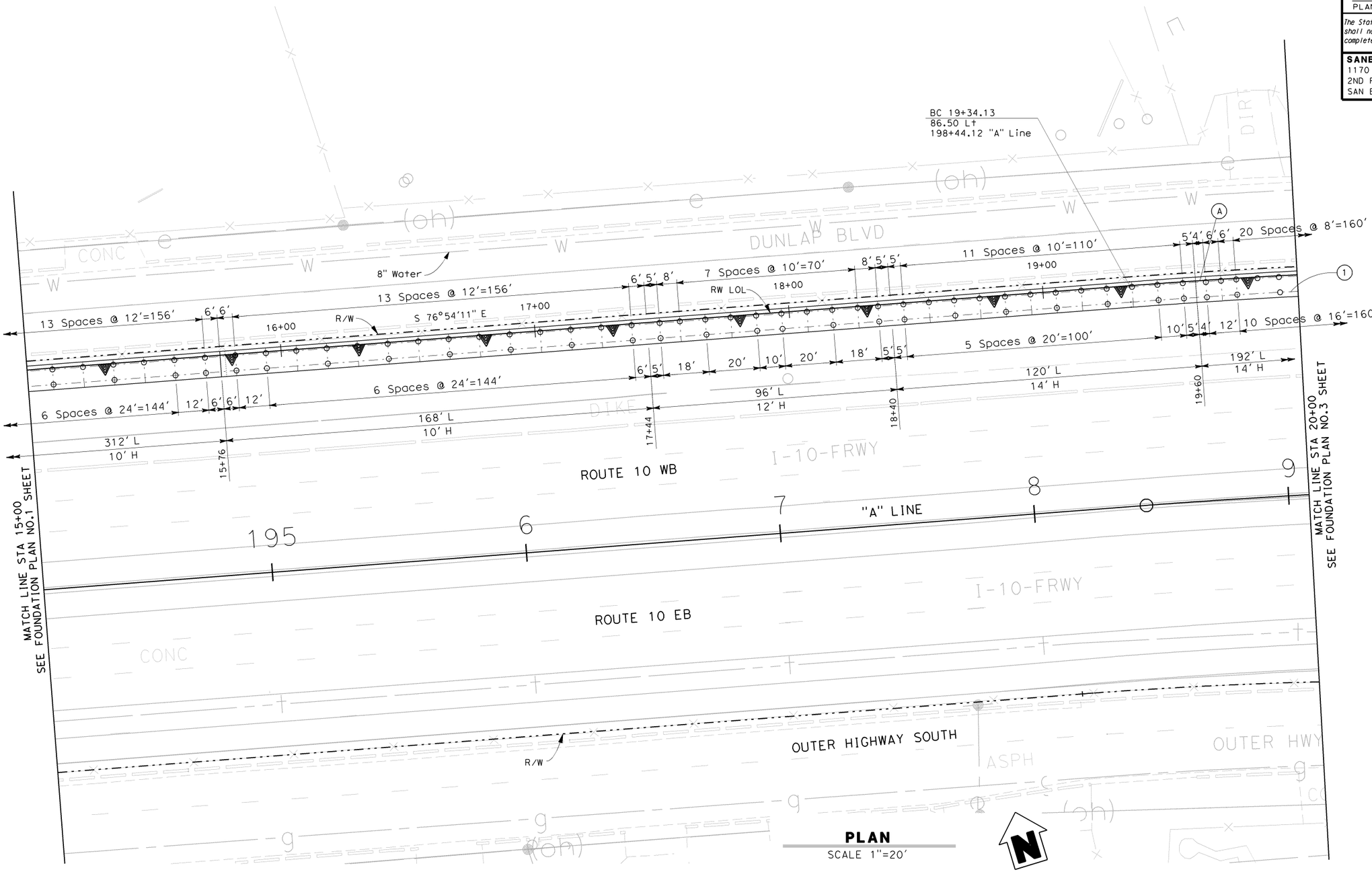

PLAN
SCALE 1"=20'

Note:

1. Dimensions along Pile centerline relative to RW201 LOL. Pile location shall be radial to RW201 LOL.

GEOTECHNICAL PROFESSIONAL APPROVAL DATE

DESIGN OVERSIGHT	SCALE:	VERT.DATUM NAVD 88	HORZ.DATUM NAD 83	DESIGN	BY R Ramoso/H Mai	CHECKED R Hawthorne
	PHOTOGRAMMETRY AS OF:		ALIGNMENT TIES	DETAILS	BY C Morgan	CHECKED R Hawthorne
	SURVEYED	BY	DRAFTED BY	QUANTITIES	BY R Ramoso/H Mai	CHECKED R Hawthorne
SIGN OFF DATE	FIELD CHECKED	BY	CHECKED BY			

FOUNDATION PLAN SHEET (METRIC) (REV. 10/27/05)

ORIGINAL SCALE IN MILLIMETERS FOR REDUCED PLANS 0 10 20 30 40 50 60 70 80 90 100

PREPARED FOR THE STATE OF CALIFORNIA DEPARTMENT OF TRANSPORTATION

Ed Kouzi
PROJECT ENGINEER

CU 08220
EA 0F1500

BRIDGE NO. --
KILOMETER POST --

DISREGARD PRINTS BEARING EARLIER REVISION DATES

REVISION DATES (PRELIMINARY STAGE ONLY)

SHEET X OF XX

RETAINING WALL 201
FOUNDATION PLAN NO.2

FILE => ...\0F150qc006.dgn

USERNAME => morganc3 DATE PLOTTED => 6/30/2009 TIME PLOTTED => 8:39:10 PM

DIST	COUNTY	ROUTE	KILOMETER POST TOTAL PROJECT	SHEET No	TOTAL SHEETS
8	SBd	10	33.3/R36.9	XXX	XXX

REGISTERED CIVIL ENGINEER ------09

PLANS APPROVAL DATE

REGISTERED PROFESSIONAL ENGINEER ROBERT E. HAWTHORNE No. 40075 Exp. 03/31/10 CIVIL STATE OF CALIFORNIA

The State of California or its officers or agents shall not be responsible for the accuracy or completeness of electronic copies of this plan sheet.

SANBAG
1170 WEST 3RD STREET
2ND FLOOR
SAN BERNARDINO, CA 92410

AECOM
999 W. TOWN & COUNTRY RD
ORANGE, CA 92868

CURVE DATA

NO.	R	Δ	T	L
A	2999.59	06°59′58″	183.45	366.44
B	1701.50	11°57′08″	178.12	354.94

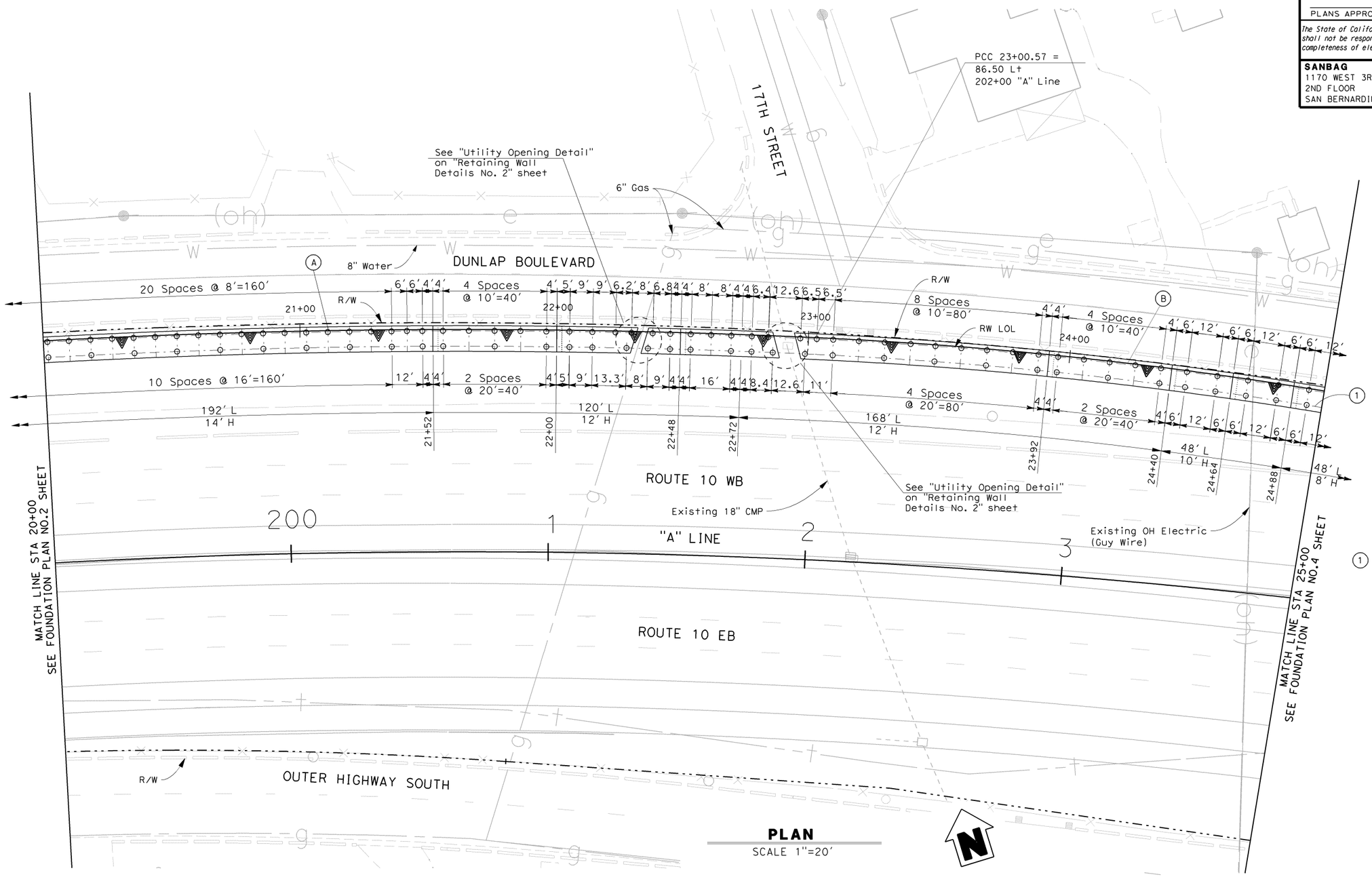

PLAN
SCALE 1"=20′

Note:

(1) Dimensions along Pile centerline relative to RW201 LOL. Pile location shall be radial to RW201 LOL.

GEOTECHNICAL PROFESSIONAL APPROVAL DATE

DESIGN OVERSIGHT	SCALE:	VERT.DATUM NAVD 88	HORZ.DATUM NAD 83	DESIGN	BY R Ramoso/H Mai	CHECKED R Hawthorne	PREPARED FOR THE STATE OF CALIFORNIA DEPARTMENT OF TRANSPORTATION
	PHOTOGRAMMETRY AS OF:	ALIGNMENT TIES		DETAILS	BY C Morgan	CHECKED R Hawthorne	
SIGN OFF DATE	SURVEYED BY	DRAFTED BY		QUANTITIES	BY R Ramoso/H Mai	CHECKED R Hawthorne	
	FIELD CHECKED BY	CHECKED BY					

Ed Kouzi
PROJECT ENGINEER

BRIDGE NO. --
KILOMETER POST --

RETAINING WALL 201
FOUNDATION PLAN NO.3

FOUNDATION PLAN SHEET (METRIC) (REV. 10/27/05)

ORIGINAL SCALE IN MILLIMETERS FOR REDUCED PLANS 0 10 20 30 40 50 60 70 80 90 100

CU 08220
EA 0F1500

DISREGARD PRINTS BEARING EARLIER REVISION DATES

0FREVISION DATES (PRELIMINARY STAGE ONLY)

SHEET X XX

FILE => ...\0F150qc007.dgn

USERNAME => morganc3 DATE PLOTTED => 6/30/2009 TIME PLOTTED => 8:40:49 PM

DIST	COUNTY	ROUTE	KILOMETER POST TOTAL PROJECT	SHEET No	TOTAL SHEETS
8	SBd	10	33.3/R36.9	XXX	XXX

REGISTERED CIVIL ENGINEER ------09

PLANS APPROVAL DATE

REGISTERED PROFESSIONAL ENGINEER ROBERT E. HAWTHORNE No. 40075 Exp. 03/31/10 CIVIL STATE OF CALIFORNIA

The State of California or its officers or agents shall not be responsible for the accuracy or completeness of electronic copies of this plan sheet.

SANBAG
1170 WEST 3RD STREET
2ND FLOOR
SAN BERNARDINO, CA 92410

AECOM
999 W. TOWN & COUNTRY RD
ORANGE, CA 92868

CURVE DATA

NO.	R	Δ	T	L
A	2999.59	06°59′58″	183.45	366.44
B	1701.50	11°57′08″	178.12	354.94

Note:

1. Dimensions along Pile centerline relative to RW201 LOL. Pile location shall be radial to RW201 LOL.

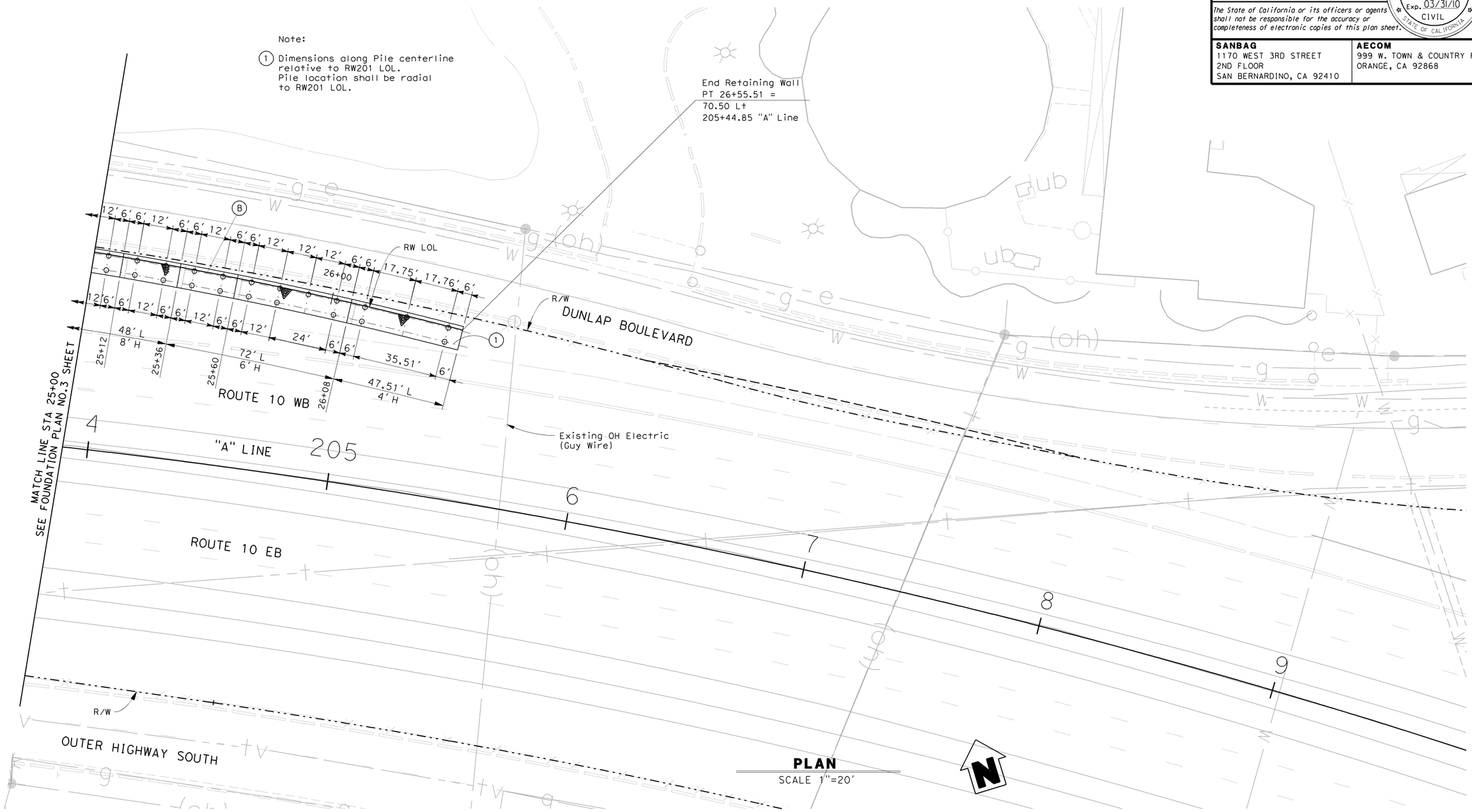

PLAN
SCALE 1"=20′

GEOTECHNICAL PROFESSIONAL APPROVAL DATE

DESIGN OVERSIGHT	SCALE:	VERT.DATUM NAVD 88	HORZ.DATUM NAD 83	DESIGN	BY R Ramoso/H Mai	CHECKED R Hawthorne	PREPARED FOR THE STATE OF CALIFORNIA DEPARTMENT OF TRANSPORTATION
	PHOTOGRAMMETRY AS OF:	ALIGNMENT TIES		DETAILS	BY C Morgan	CHECKED R Hawthorne	
	SURVEYED BY	DRAFTED BY		QUANTITIES	BY R Ramoso/H Mai	CHECKED R Hawthorne	
SIGN OFF DATE	FIELD CHECKED BY	CHECKED BY					

Ed Kouzi
PROJECT ENGINEER

BRIDGE NO. --
KILOMETER POST --

RETAINING WALL 201
FOUNDATION PLAN NO.4

FOUNDATION PLAN SHEET (METRIC) (REV. 10/27/05)

ORIGINAL SCALE IN MILLIMETERS FOR REDUCED PLANS 0 10 20 30 40 50 60 70 80 90 100

CU 08220
EA 0F1500

DISREGARD PRINTS BEARING EARLIER REVISION DATES

REVISION DATES (PRELIMINARY STAGE ONLY)

SHEET X XX

FILE => ...\0F150qc008.dgn

USERNAME => morganc3 DATE PLOTTED => 6/30/2009 TIME PLOTTED => 8:42:26 PM

DIST	COUNTY	ROUTE	POST MILES TOTAL PROJECT	SHEET No	TOTAL SHEETS
8	SBd	10	33.3/R36.9		

REGISTERED CIVIL ENGINEER X DATE

PLANS APPROVAL DATE

REGISTERED PROFESSIONAL ENGINEER CRAIG P. LESZKIEWICZ No. 67419 Exp. 12/31/2010 CIVIL STATE OF CALIFORNIA

The State of California or its officers or agents shall not be responsible for the accuracy or completeness of electronic copies of this plan sheet.

SANBAG
1170 WEST 3RD STREET, 2ND FLOOR
SAN BERNARDINO, CA 92410

CH2M HILL
2280 MARKET STREET, SUITE 200
RIVERSIDE, CA 92501

Notes:

1. This LOTB sheet was prepared in accordance with the Caltrans Soil & Rock Logging, Classification, and Presentation Manual.
2. .38" and 2.36" diameter samples were taken alternately using a split-spoon sampler and a modified California split barrel sampler, respectively. The California modified split barrel sampler has an inside diameter (I.D.) of 2.36" and the outside diameter (O.D.) of 3.00". The split-spoon sampler has an I.D. of 1.38" and an outside diameter of 2.00".

   An automatic trip hammer system was used to advance the drive and SPT samplers.

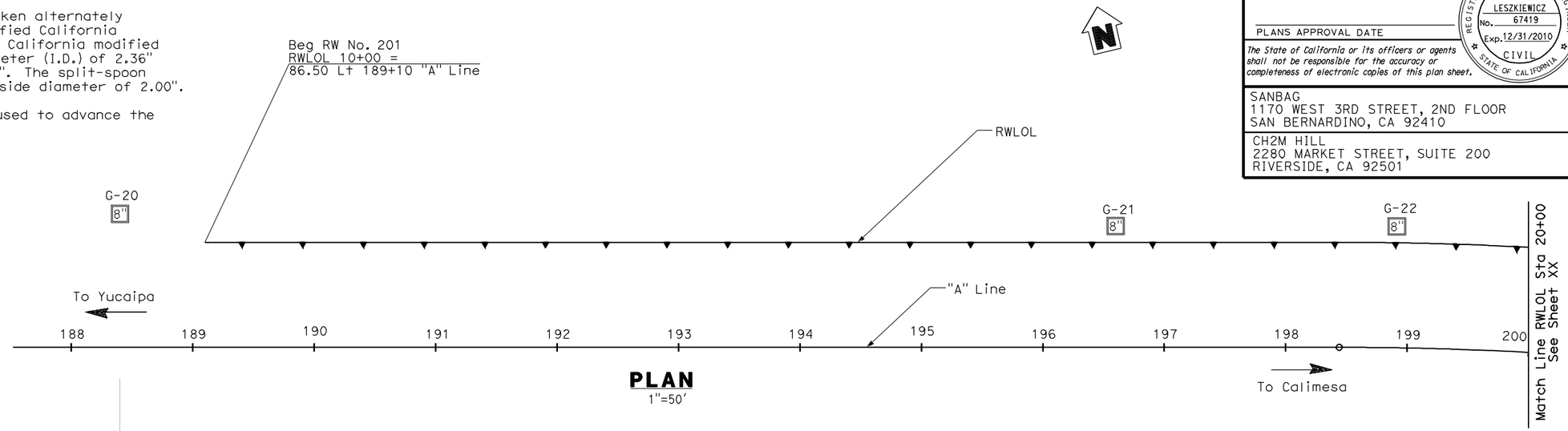

PLAN
1"=50'

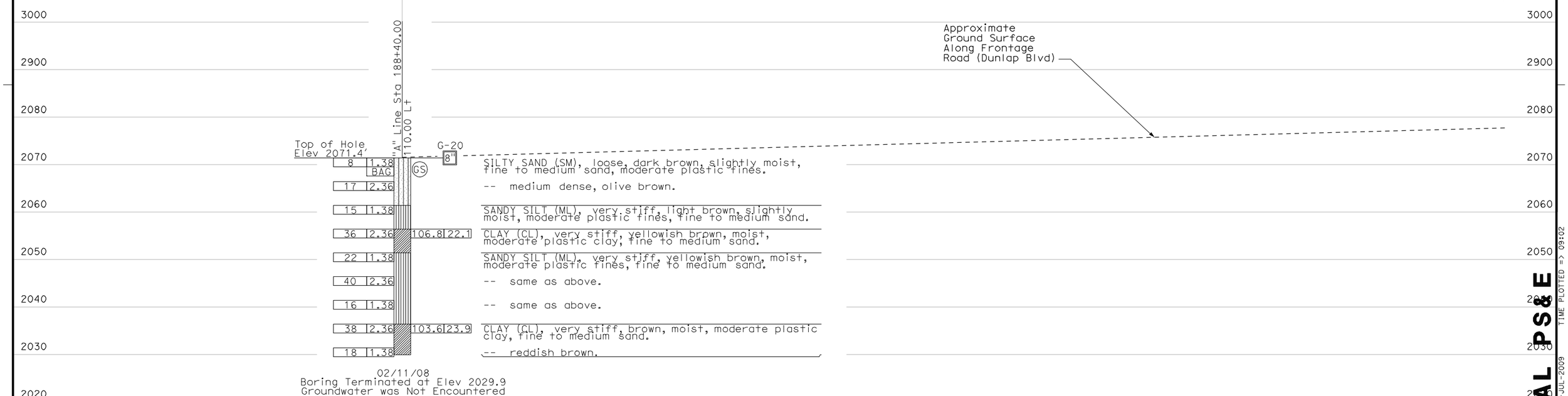

PROFILE
Horiz 1"=50'
Vert 1"=10'

Stationing Along "A" Line

188 189 190 191 192 193 194 195 196 197 198 199 200

Robert Zezoff DESIGN OVERSIGHT	DRAWN BY	A. Gorden	C. Leszkiewicz FIELD INVESTIGATION BY:	PREPARED FOR THE STATE OF CALIFORNIA DEPARTMENT OF TRANSPORTATION	Mohammed Atiqullah PROJECT ENGINEER	BRIDGE NO. --	RETAINING WALL No. 201
X SIGN OFF DATE	CHECKED BY	X	DATE 02/11/08			POST MILES 35.99	LOG OF TEST BORINGS

ORIGINAL SCALE IN INCHES FOR REDUCED PLANS 0 1 2 3

CU 08220
EA 0F1500

DISREGARD PRINTS BEARING EARLIER REVISION DATES 06/24/09

REVISION DATES

SHEET 1 OF 12

FILE => 0F150gc008.dgn

INITIAL PS&E

USERNAME => atruong DATE PLOTTED => 15-JUL-2009 TIME PLOTTED => 09:02

DIST	COUNTY	ROUTE	POST MILES TOTAL PROJECT	SHEET No	TOTAL SHEETS
8	SBd	10	33.3/R36.9		

REGISTERED CIVIL ENGINEER X DATE

PLANS APPROVAL DATE

REGISTERED PROFESSIONAL ENGINEER CRAIG P. LESZKIEWICZ No. 67419 Exp. 12/31/2010 CIVIL STATE OF CALIFORNIA

The State of California or its officers or agents shall not be responsible for the accuracy or completeness of electronic copies of this plan sheet.

SANBAG
1170 WEST 3RD STREET, 2ND FLOOR
SAN BERNARDINO, CA 92410

CH2M HILL
2280 MARKET STREET, SUITE 200
RIVERSIDE, CA 92501

Notes:

1. This LOTB sheet was prepared in accordance with the Caltrans Soil & Rock Logging, Classification, and Presentation Manual.
2. .38" and 2.36" diameter samples were taken alternately using a split-spoon sampler and a modified California split barrel sampler, respectively. The California modified split barrel sampler has an inside diameter (I.D.) of 2.36" and the outside diameter (O.D.) of 3.00". The split-spoon sampler has an I.D. of 1.38" and an outside diameter of 2.00".

   An automatic trip hammer system was used to advance the drive and SPT samplers.

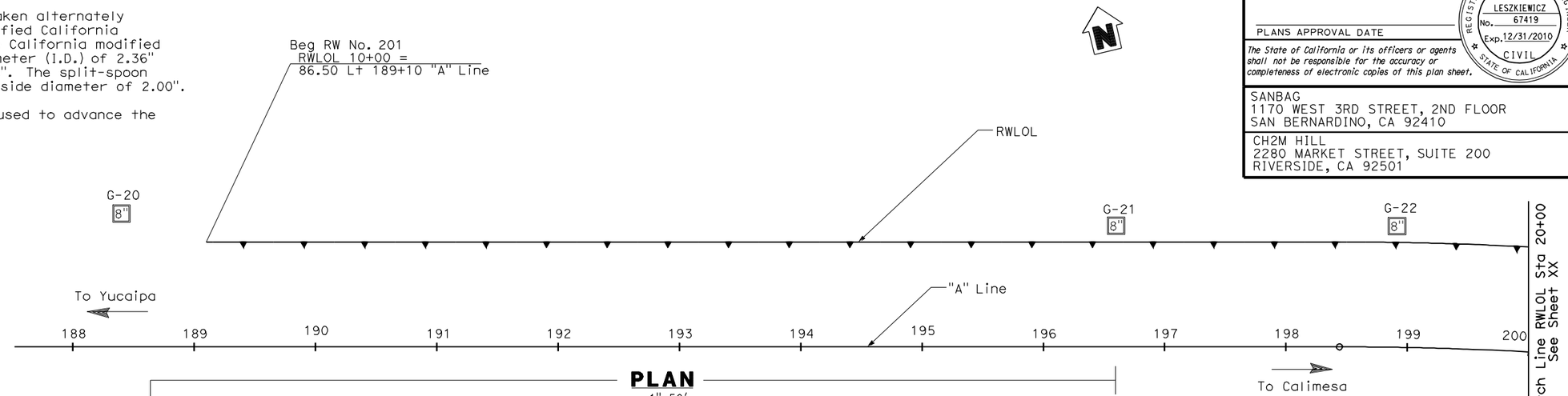

PLAN
1"=50'

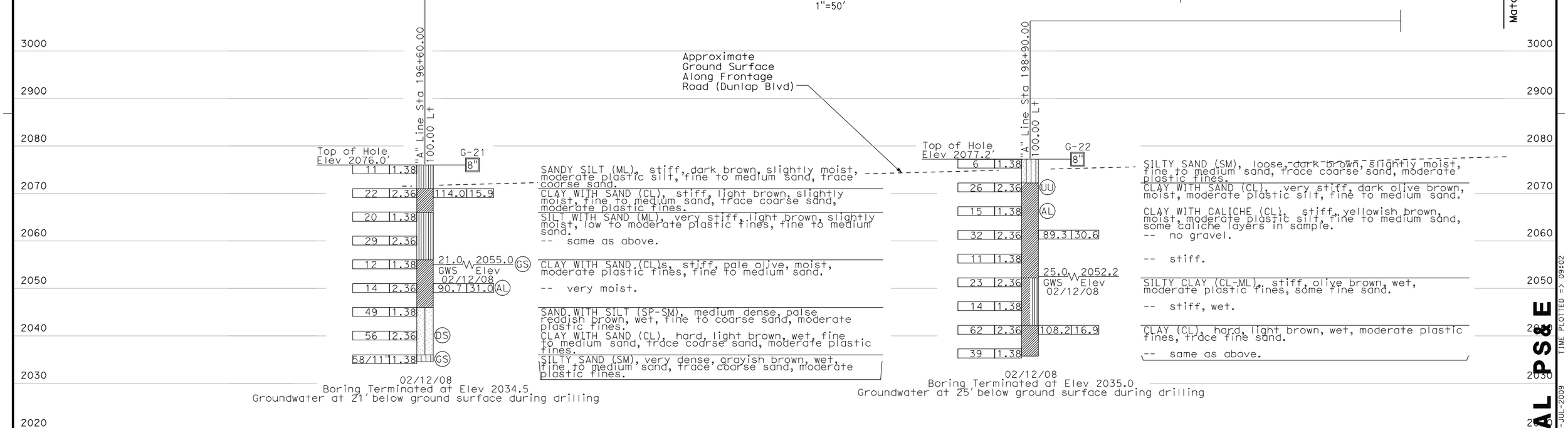

PROFILE
Horiz 1"=50'
Vert 1"=10'

Stationing Along "A" Line

188 189 190 191 192 193 194 195 196 197 198 199 200

INITIAL PS&E

Robert Zezoff DESIGN OVERSIGHT	DRAWN BY	A. Gorden	C. Leszkiewicz FIELD INVESTIGATION BY:
X SIGN OFF DATE	CHECKED BY	X	DATE 02/12/08

PREPARED FOR THE STATE OF CALIFORNIA DEPARTMENT OF TRANSPORTATION

Mohammed Atiqullah
PROJECT ENGINEER

BRIDGE NO. --
POST MILES 35.99

RETAINING WALL No. 201
LOG OF TEST BORINGS

ORIGINAL SCALE IN INCHES FOR REDUCED PLANS 0 1 2 3

CU 08220
EA 0F1500

DISREGARD PRINTS BEARING EARLIER REVISION DATES 06/26/09

REVISION DATES

SHEET 2 OF 12

FILE => 0F150gc009.dgn

USERNAME => atruong DATE PLOTTED => 15-JUL-2009 TIME PLOTTED => 09:02

DIST	COUNTY	ROUTE	POST MILES TOTAL PROJECT	SHEET No	TOTAL SHEETS
8	SBd	10	33.3/R36.9	XXX	

REGISTERED CIVIL ENGINEER X DATE

PLANS APPROVAL DATE

REGISTERED PROFESSIONAL ENGINEER CRAIG P. LESZKIEWICZ No. 67419 Exp. 12/31/2010 CIVIL STATE OF CALIFORNIA

The State of California or its officers or agents shall not be responsible for the accuracy or completeness of electronic copies of this plan sheet.

SANBAG
1170 WEST 3RD STREET, 2ND FLOOR
SAN BERNARDINO, CA 92410

CH2M HILL
2280 MARKET STREET, SUITE 200
RIVERSIDE, CA 92501

Notes:

1. This LOTB sheet was prepared in accordance with the Caltrans Soil & Rock Logging, Classification, and Presentation Manual.
2. .38" and 2.36" diameter samples were taken alternately using a split-spoon sampler and a modified California split barrel sampler, respectively. The California modified split barrel sampler has an inside diameter (I.D.) of 2.36" and the outside diameter (O.D.) of 3.00". The split-spoon sampler has an I.D. of 1.38" and an outside diameter of 2.00".

   An automatic trip hammer system was used to advance the drive and SPT samplers.

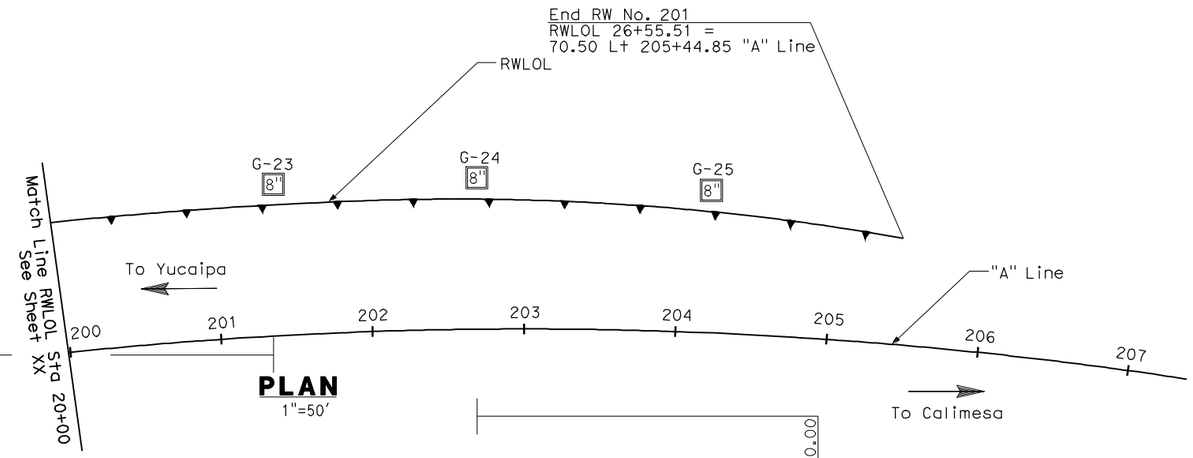

PLAN
1"=50'

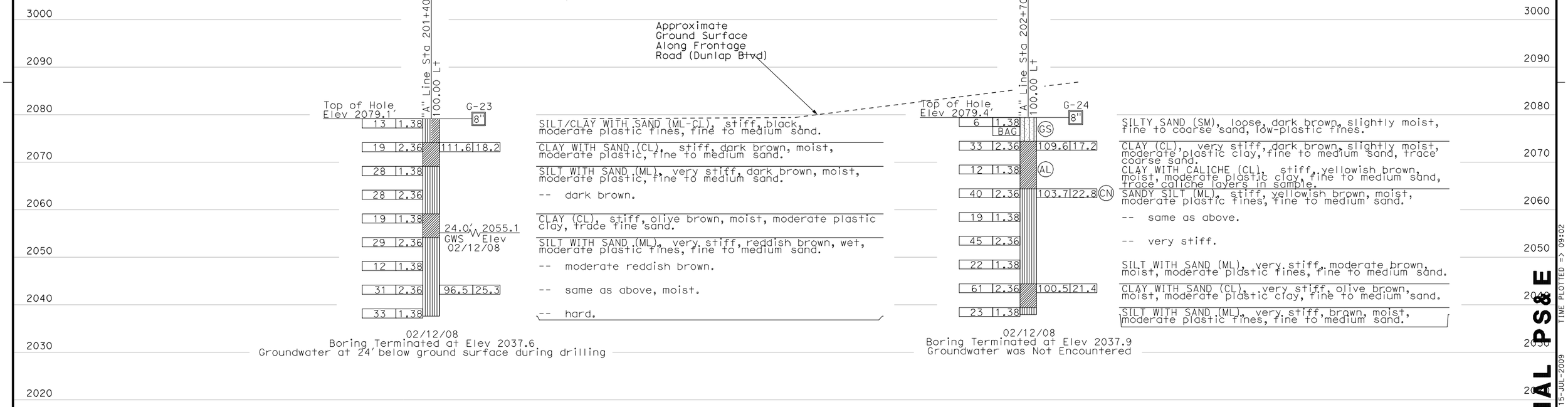

PROFILE
Horiz 1"=50'
Vert 1"=10'

INITIAL PS&E

USERNAME => atruong DATE PLOTTED => 15-JUL-2009 TIME PLOTTED => 09:02

Robert Zezoff DESIGN OVERSIGHT	DRAWN BY	A. Gorden	C. Leszkiewicz FIELD INVESTIGATION BY:	PREPARED FOR THE STATE OF CALIFORNIA DEPARTMENT OF TRANSPORTATION	Mohammed Atiqullah PROJECT ENGINEER
X SIGN OFF DATE	CHECKED BY	X	DATE 02/12/08		

BRIDGE NO. --
POST MILES 36.99

RETAINING WALL No. 201

LOG OF TEST BORINGS

ORIGINAL SCALE IN INCHES FOR REDUCED PLANS 0 1 2 3

CU 08220
EA 0F1500

DISREGARD PRINTS BEARING EARLIER REVISION DATES 06/28/09

REVISION DATES

SHEET 3 OF 12

FILE => 0F150gc010.dgn

DIST	COUNTY	ROUTE	POST MILES TOTAL PROJECT	SHEET No	TOTAL SHEETS
8	SBd	10	33.3/R36.9		

REGISTERED CIVIL ENGINEER X DATE

PLANS APPROVAL DATE

REGISTERED PROFESSIONAL ENGINEER CRAIG P. LESZKIEWICZ No. 67419 Exp. 12/31/2010 CIVIL STATE OF CALIFORNIA

The State of California or its officers or agents shall not be responsible for the accuracy or completeness of electronic copies of this plan sheet.

SANBAG
1170 WEST 3RD STREET, 2ND FLOOR
SAN BERNARDINO, CA 92410

CH2M HILL
2280 MARKET STREET, SUITE 200
RIVERSIDE, CA 92501

Notes:

1. This LOTB sheet was prepared in accordance with the Caltrans Soil & Rock Logging, Classification, and Presentation Manual.
2. .38" and 2.36" diameter samples were taken alternately using a split-spoon sampler and a modified California split barrel sampler, respectively. The California modified split barrel sampler has an inside diameter (I.D.) of 2.36" and the outside diameter (O.D.) of 3.00". The split-spoon sampler has an I.D. of 1.38" and an outside diameter of 2.00".

   An automatic trip hammer system was used to advance the drive and SPT samplers.

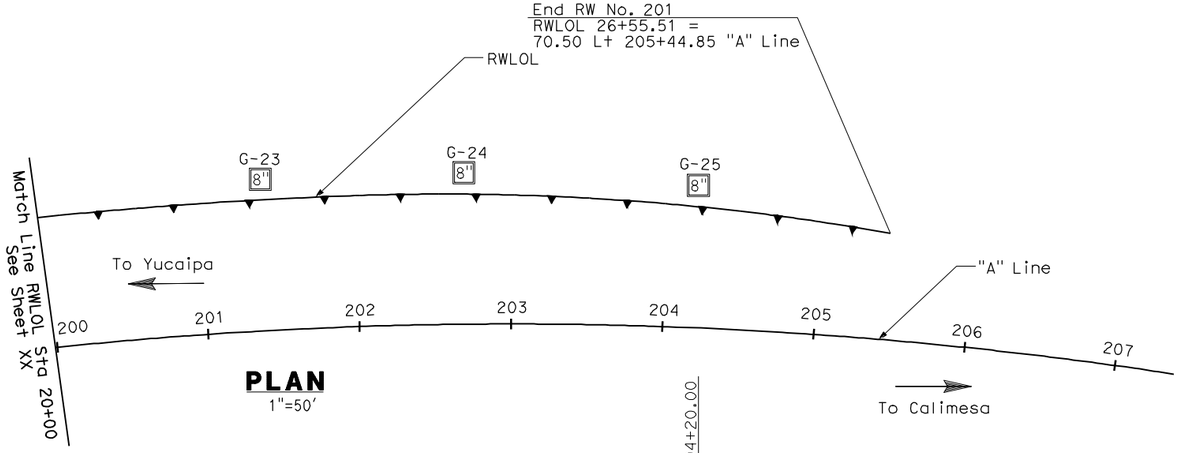

PLAN
1"=50'

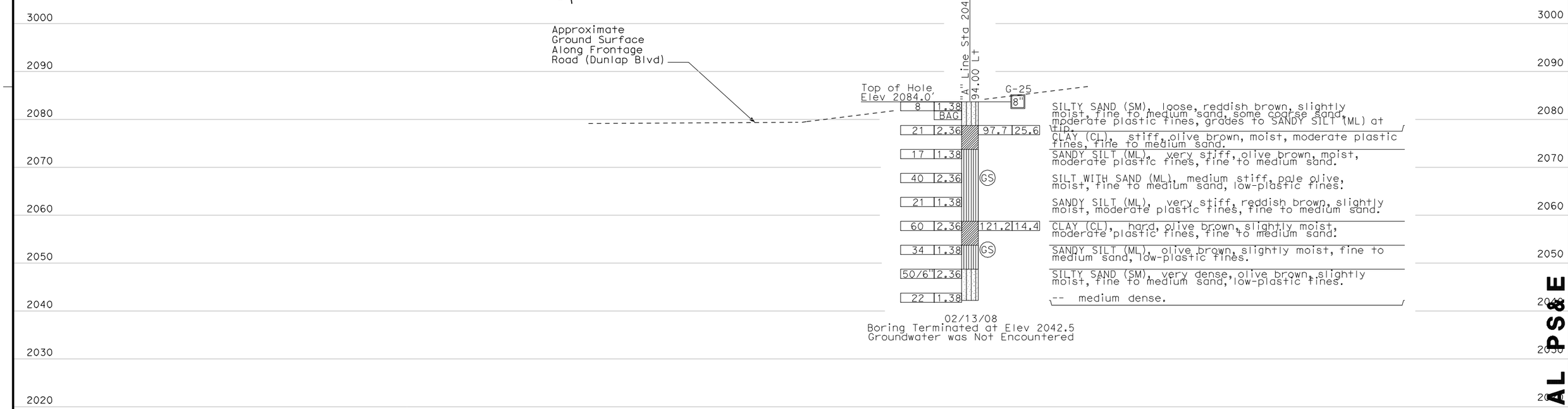

PROFILE
Horiz 1"=50'
Vert 1"=10'

Stationing Along "A" Line

200 201 202 203 204 205 206 207

INITIAL PS&E

USERNAME => gtruong DATE PLOTTED => 15-JUL-2009 TIME PLOTTED => 09:02

Robert Zezoff DESIGN OVERSIGHT	DRAWN BY	A. Gorden	C. Leszkiewicz FIELD INVESTIGATION BY:	PREPARED FOR THE STATE OF CALIFORNIA DEPARTMENT OF TRANSPORTATION	Mohammed Atiqullah PROJECT ENGINEER
X SIGN OFF DATE	CHECKED BY	X	DATE 02/13/08		

BRIDGE NO. --
POST MILES 35.99

RETAINING WALL No. 201

LOG OF TEST BORINGS

ORIGINAL SCALE IN INCHES FOR REDUCED PLANS 0 1 2 3

CU 08220
EA 0F1500

DISREGARD PRINTS BEARING EARLIER REVISION DATES 06/24/09

REVISION DATES

SHEET 4 OF 12

FILE => 0F150gc011.dgn

Dist	COUNTY	ROUTE	POST MILES TOTAL PROJECT	SHEET No.	TOTAL SHEETS
8	SBd	10	33.3/R36.9	XXX	XXX

LICENSED LANDSCAPE ARCHITECT

PLANS APPROVAL DATE

LICENSED LANDSCAPE ARCHITECT Shawn T. Burch 3729 Signature Renewal Date Date STATE OF CALIFORNIA

THE STATE OF CALIFORNIA OR ITS OFFICERS OR AGENTS SHALL NOT BE RESPONSIBLE FOR THE ACCURACY OR COMPLETENESS OF ELECTRONIC COPIES OF THIS PLAN SHEET.

SANBAG
1170 WEST 3RD STREET
2ND FLOOR
SAN BERNARDINO, CA 92410

STB LANDSCAPE ARCHITECTS, INC.
15 SOUTH 5TH STREET
REDLANDS, CA 92373

ABBREVIATIONS

AMEND — amendment
B & B — balled and burlapped
Dia — diameter
EA — each
LB — pound
oz. — ounce
Ft — foot/feet
SQFT — square feet
CF — cubic feet
CY — cubic yard
Max — maximum
Min — minimum
NCN — no common name
No. — number
Pkt — packet
PLT ESTB — plant establishment
Pvmt — pavement
R/W — right of way
SF — state furnished
TRVD — traveled

PLANT LIST AND PLANTING SPECIFICATIONS

PLANT GROUP	PLANT No.	SYMBOL	BOTANICAL NAME	COMMON NAME	SIZE	QUANTITY EACH	HOLE SIZE (INCH) Dia	HOLE SIZE (INCH) DEPTH	BASIN TYPE	IRON SULFATE ①	SOIL AMEND ①	COMMERCIAL FERTILIZER ① PLANTING	COMMERCIAL FERTILIZER ① PLT ESTB	BASIN MULCH	STAKING	PLANTING LIMITS MINIMUM DISTANCE (Ft) FROM TRVD WAY	PVMT	FENCE	WALL	PAVED DITCH	EARTH DITCH	ON CENTER (Ft)	REMARKS
A	1	◎	ACACIA REDOLENS 'LOW BOY'	NCN	No. 5	36	18"	12"	II	½LB/CY	6 CF/CY	1/3 LB/CY	1/3 LB/CY	1 CF	-	-	13	13	13	13	12	8	SHRUB
	2	◎	ROSA	RED CARPET ROSE	No. 5	51	18"	12"	II	½LB/CY	6 CF/CY	1/3 LB/CY	1/3 LB/CY	1 CF	-	-	8	6	6	6	8	6	SHRUB
H	3		CARPOBROTUS EDULIS	HOTTENTOT FIG	CUTTINGS	1885	-	-	-	-	-	16.4 LB/1000 SQFT	16.4 LB/1000 SQFT	-	-	-	6	6	6	6	8	1.5	GROUND COVER ⑧

MULCH

APPLICABLE WHEN CIRCLED:

① - Quantities shown are "per plant" unless shown as SQFT or SQYD application rates.
2 - Sufficient to receive root ball.
3 - Does not apply to mulch areas.
4 - As shown on plans.
5 - Unless otherwise shown on plans.
6 - See detail.
7 - See Special Provisions.
⑧ - Do not install mulch in Carpobrotus planting areas.

NOTE:

Underlined portions of botanical name indicate abbreviations used on Planting Plans.

PLANT LIST

PL-1

REVISED BY | DATE REVISED

CALCULATED-DESIGNED BY | CHECKED BY

CONSULTANT FUNTIONAL SUPERVISOR: SHAWN T. BURCH

STATE OF CALIFORNIA - DEPARTMENT OF TRANSPORTATION

Caltrans

LAST REVISION | DATE PLOTTED => 15-JUL-2009

Dist	COUNTY	ROUTE	POST MILES TOTAL PROJECT	SHEET No.	TOTAL SHEETS
8	SBd	10	33.3/R36.9	XXX	XXX

LICENSED LANDSCAPE ARCHITECT

PLANS APPROVAL DATE

THE STATE OF CALIFORNIA OR ITS OFFICERS OR AGENTS SHALL NOT BE RESPONSIBLE FOR THE ACCURACY OR COMPLETENESS OF SCANNED COPIES OF THIS PLAN SHEET.

LICENSED LANDSCAPE ARCHITECT Shawn T. Burch 2723 Signature 10-29-10 Renewal Date Date STATE OF CALIFORNIA

SANBAG
1170 WEST 3RD STREET
2ND FLOOR
SAN BERNARDINO, CA 92410

STB LANDSCAPE ARCHITECTS, INC.
15 SOUTH 5TH STREET
REDLANDS, CA 92373

NOTE:

1. FOR COMPLETE R/W AND ACCURATE ACCESS DATA, SEE R/W RECORD MAPS AT DISTRICT OFFICE.

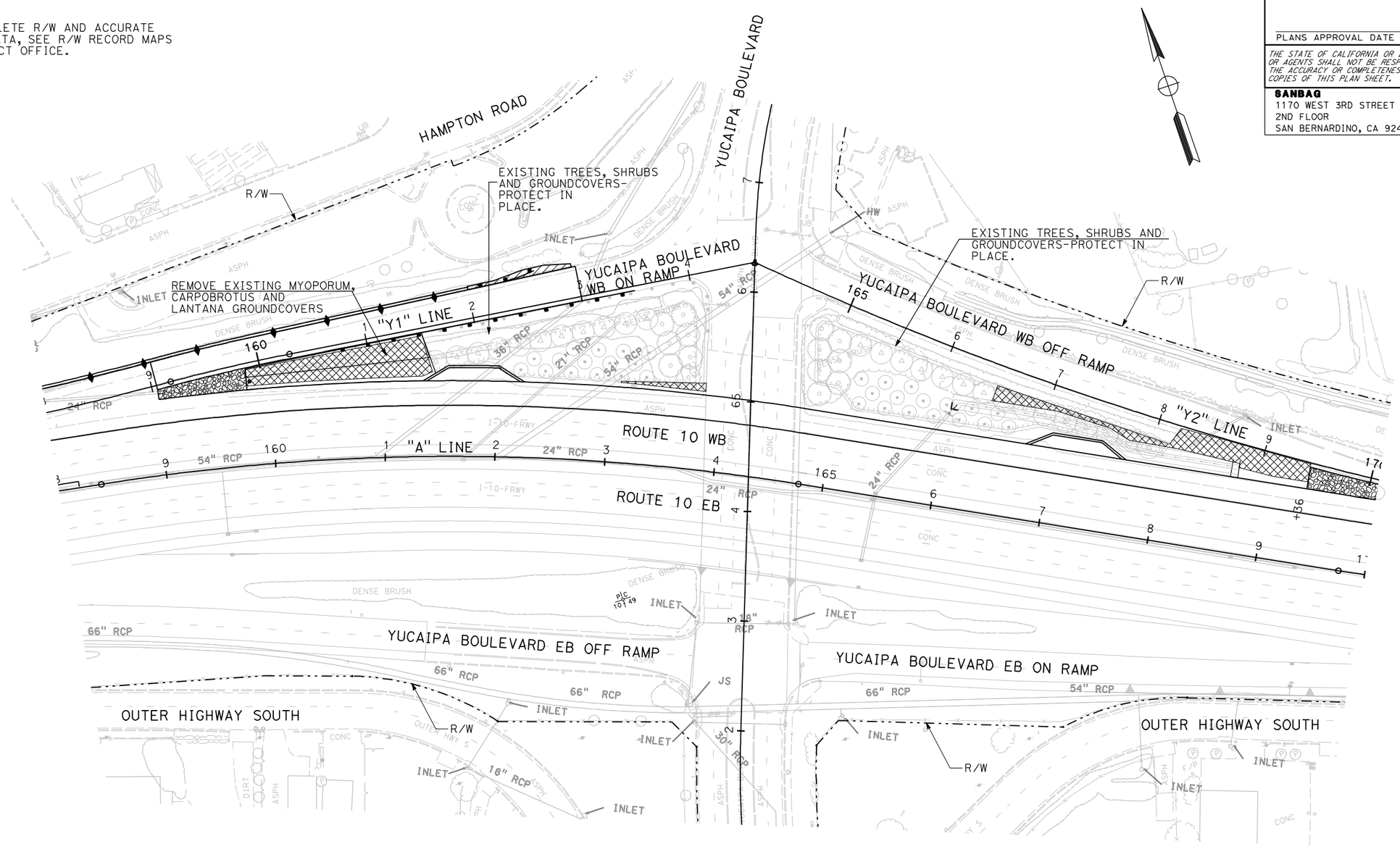

LEGEND:

EXISTING GROUND COVER, SHRUBS AND TREES WHERE INDICATED TO BE REMOVED

NOTES:

PLANT MATERIAL WITHIN THE LIMITS OF GRADING TO BE REMOVED PER ENGINEER'S PLAN.

THIS PLAN ACCURATE FOR PLANT REMOVAL WORK ONLY.

PLANT REMOVAL PLAN

SCALE 1"=50'

PR-1

REVISED BY	DATE REVISED

CALCULATED-DESIGNED BY | CHECKED BY

CONSULTANT FUNTIONAL SUPERVISOR: SHAWN T. BURCH

STATE OF CALIFORNIA - DEPARTMENT OF TRANSPORTATION

Caltrans

LAST REVISION | DATE PLOTTED => 15-JUL-2009

BORDER LAST REVISED 2/1/2008 | RELATIVE BORDER SCALE IS IN INCHES 0 1 2 3 | USERNAME => gtruong | CU 0822 | EA 0F1500

Dist	COUNTY	ROUTE	POST MILES TOTAL PROJECT	SHEET No.	TOTAL SHEETS
8	SBd	10	33.3/R36.9	XXX	XXX

LICENSED LANDSCAPE ARCHITECT

PLANS APPROVAL DATE

LICENSED LANDSCAPE ARCHITECT Shawn T. Burch 2729 Signature 10-29-10 Renewal Date Date STATE OF CALIFORNIA

THE STATE OF CALIFORNIA OR ITS OFFICERS OR AGENTS SHALL NOT BE RESPONSIBLE FOR THE ACCURACY OR COMPLETENESS OF SCANNED COPIES OF THIS PLAN SHEET.

SANBAG
1170 WEST 3RD STREET
2ND FLOOR
SAN BERNARDINO, CA 92410

STB LANDSCAPE ARCHITECTS, INC.
15 SOUTH 5TH STREET
REDLANDS, CA 92373

NOTE:

1. FOR COMPLETE R/W AND ACCURATE ACCESS DATA, SEE R/W RECORD MAPS AT DISTRICT OFFICE.

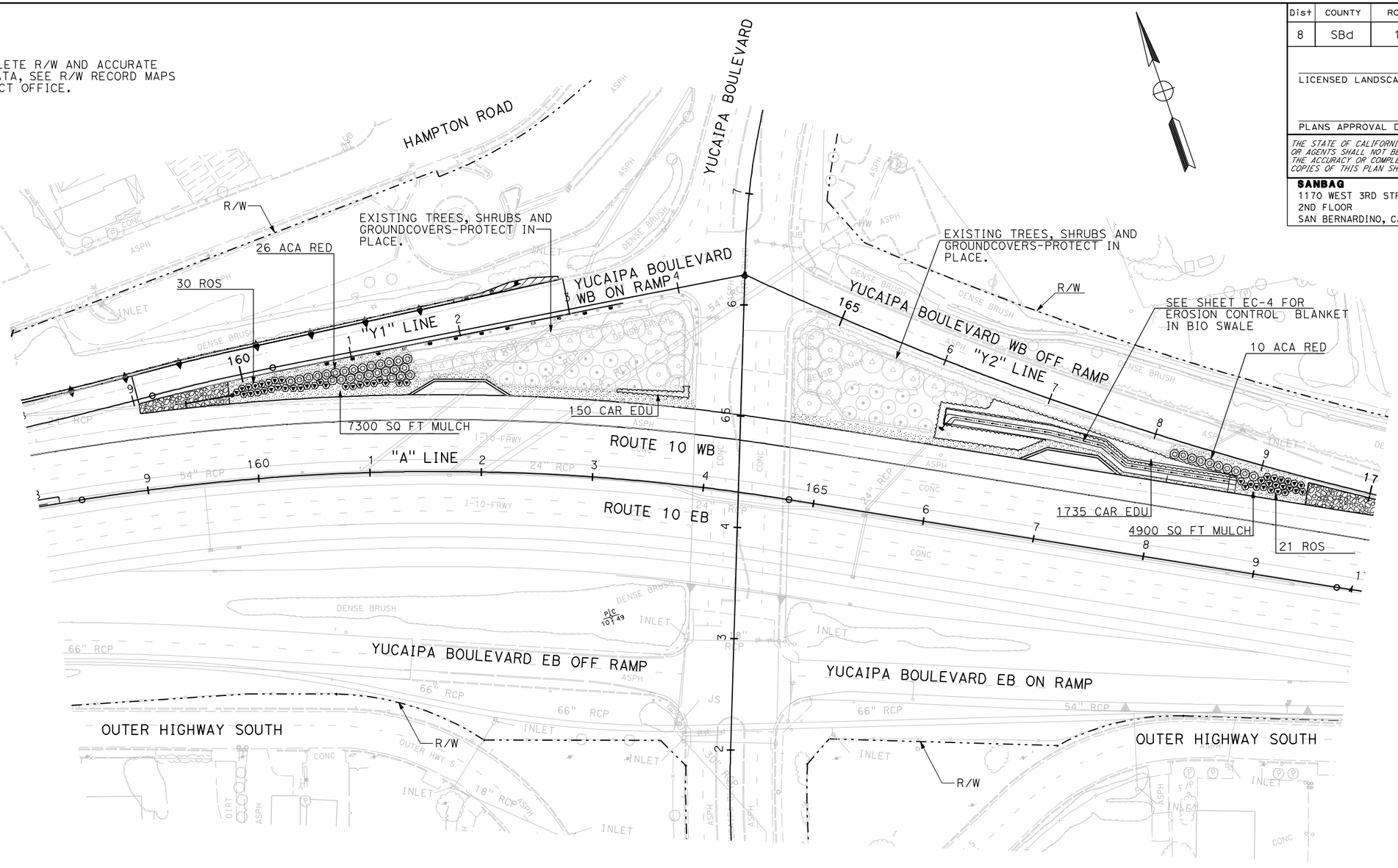

NOTES:

1. EXISTING PLANTING (PROTECTED IN PLACE) TO BE MAINTAINED AT ALL TIMES DURING CONSTRUCTION. FROM "A" LINE STA. 161+20 TO 168+20.

PLANTING PLAN

SCALE 1"=50'

PP-1

THIS PLAN ACCURATE FOR PLANTING WORK ONLY.

REVISED BY | DATE REVISED

CALCULATED-DESIGNED BY | CHECKED BY

CONSULTANT FUNTIONAL SUPERVISOR: SHAWN T. BURCH

STATE OF CALIFORNIA - DEPARTMENT OF TRANSPORTATION

Caltrans

LAST REVISION 00-00-00 | DATE PLOTTED => 15-JUL-2009

BORDER LAST REVISED 2/1/2008 | RELATIVE BORDER SCALE IS IN INCHES 0 1 2 3 | USERNAME => dtruong | CU 0822 | EA 0F1500

Dist	COUNTY	ROUTE	POST MILES TOTAL PROJECT	SHEET No.	TOTAL SHEETS
8	SBd	10	33.3/R36.9	XXX	XXX

LICENSED LANDSCAPE ARCHITECT

PLANS APPROVAL DATE

LICENSED LANDSCAPE ARCHITECT Shawn T. Burch 2729 Signature 10-29-10 Renewal Date Date STATE OF CALIFORNIA

THE STATE OF CALIFORNIA OR ITS OFFICERS OR AGENTS SHALL NOT BE RESPONSIBLE FOR THE ACCURACY OR COMPLETENESS OF SCANNED COPIES OF THIS PLAN SHEET.

SANBAG
1170 WEST 3RD STREET
2ND FLOOR
SAN BERNARDINO, CA 92410

STB LANDSCAPE ARCHITECTS, INC.
15 SOUTH 5TH STREET
REDLANDS, CA 92373

NOTE:

1. FOR COMPLETE R/W AND ACCURATE ACCESS DATA, SEE R/W RECORD MAPS AT DISTRICT OFFICE.

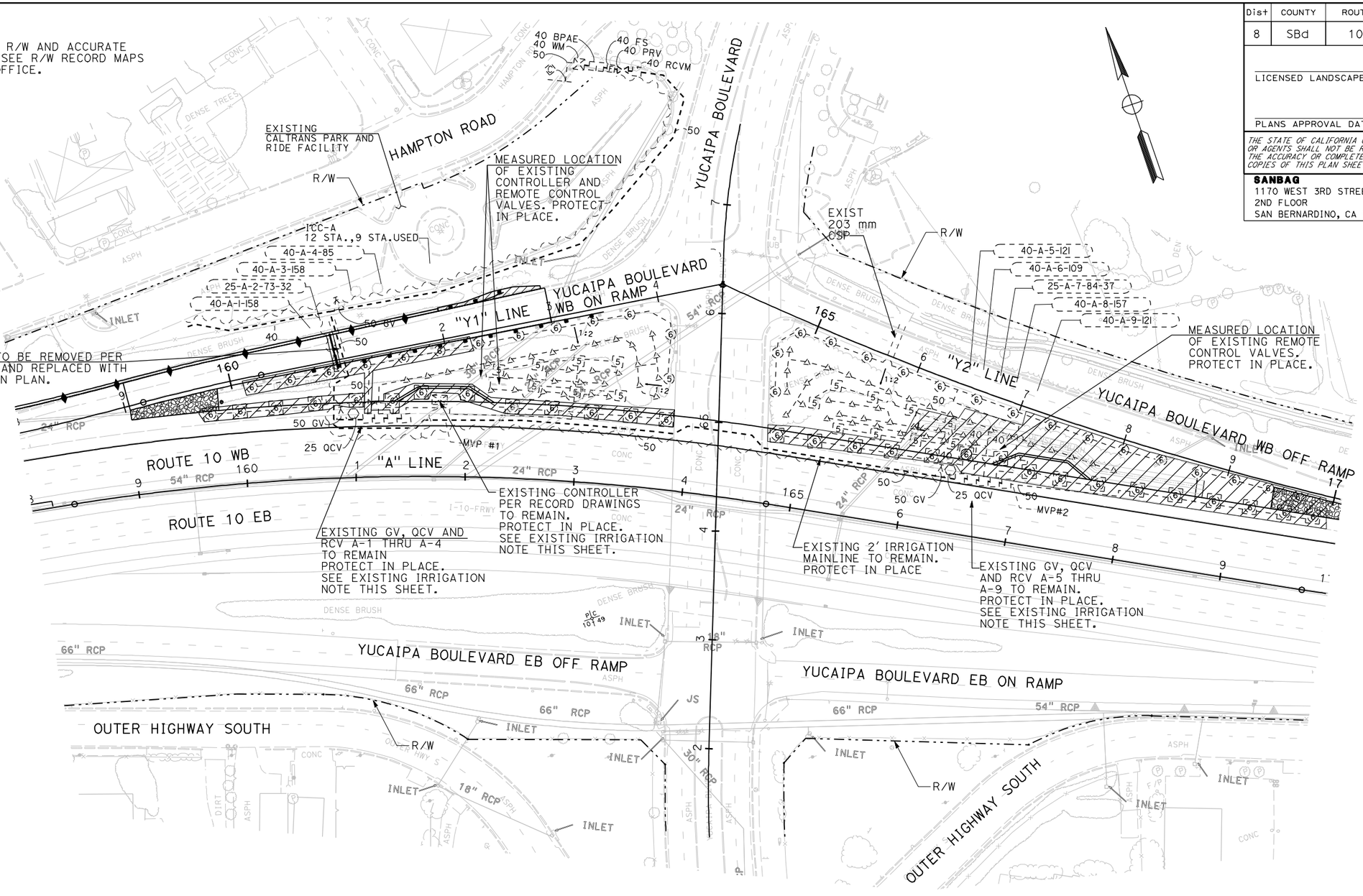

EXISTING IRRIGATION NOTE:

1. PLACEMENT OF SYMBOLS FOR EXISTING IRRIGATION CONTROLLER AND VALVES ARE SHOWN IN HARDSCAPE FOR GRAPHIC CLARITY PER RECORD DRAWINGS.
   SEE MEASURED LOCATION CALL-OUT ON PLAN FOR ACTUAL LOCATION.
2. CONTRACTOR TO COORDINATE CLOSELY WITH ENGINEER TO ENSURE THERE IS MINIMAL LAPSE IN TIME BETWEEN THE DISCONNECTION OF THE EXISTING IRRIGATION MAINLINE AND RECONNECTION OF THE NEW WHEN NEW X-OVER IS INSTALLED.

LEGEND:

PRIOR TO GRADING:
CUT EXISTING IRRIGATION LATERAL LINES FOR REMOTE CONTROL VALVES A-1, A-3 AND A-5 THRU A-9 AND REMOVE BACK TO VALVE. ALL SPRINKLERS AND ROTORS TO BE SALVAGED AND RETURNED TO CALTRANS. RECONNECT WITH NEW LATERALS PER IRRIGATION PLAN.

THIS PLAN ACCURATE FOR IRRIGATION WORK ONLY.

IRRIGATION REMOVAL PLAN

SCALE 1"=50'

IR-1

REVISED BY | DATE REVISED

CALCULATED-DESIGNED BY | CHECKED BY

CONSULTANT FUNTIONAL SUPERVISOR: SHAWN T. BURCH

STATE OF CALIFORNIA - DEPARTMENT OF TRANSPORTATION

Caltrans

LAST REVISION | DATE PLOTTED => 15-JUL-2009

BORDER LAST REVISED 2/1/2008 | RELATIVE BORDER SCALE IS IN INCHES 0 1 2 3 | USERNAME => atruong | CU 0822 | EA 0F1500

Dist	COUNTY	ROUTE	POST MILES TOTAL PROJECT	SHEET No.	TOTAL SHEETS
8	SBd	10	33.3/R36.9	XXX	XXX

LICENSED LANDSCAPE ARCHITECT

PLANS APPROVAL DATE

LICENSED LANDSCAPE ARCHITECT Shawn T. Burch 2729 Signature 10-29-10 Renewal Date Date STATE OF CALIFORNIA

THE STATE OF CALIFORNIA OR ITS OFFICERS OR AGENTS SHALL NOT BE RESPONSIBLE FOR THE ACCURACY OR COMPLETENESS OF SCANNED COPIES OF THIS PLAN SHEET.

SANBAG
1170 WEST 3RD STREET
2ND FLOOR
SAN BERNARDINO, CA 92410

STB LANDSCAPE ARCHITECTS, INC.
15 SOUTH 5TH STREET
REDLANDS, CA 92373

NOTE:

1. FOR COMPLETE R/W AND ACCURATE ACCESS DATA, SEE R/W RECORD MAPS AT DISTRICT OFFICE.

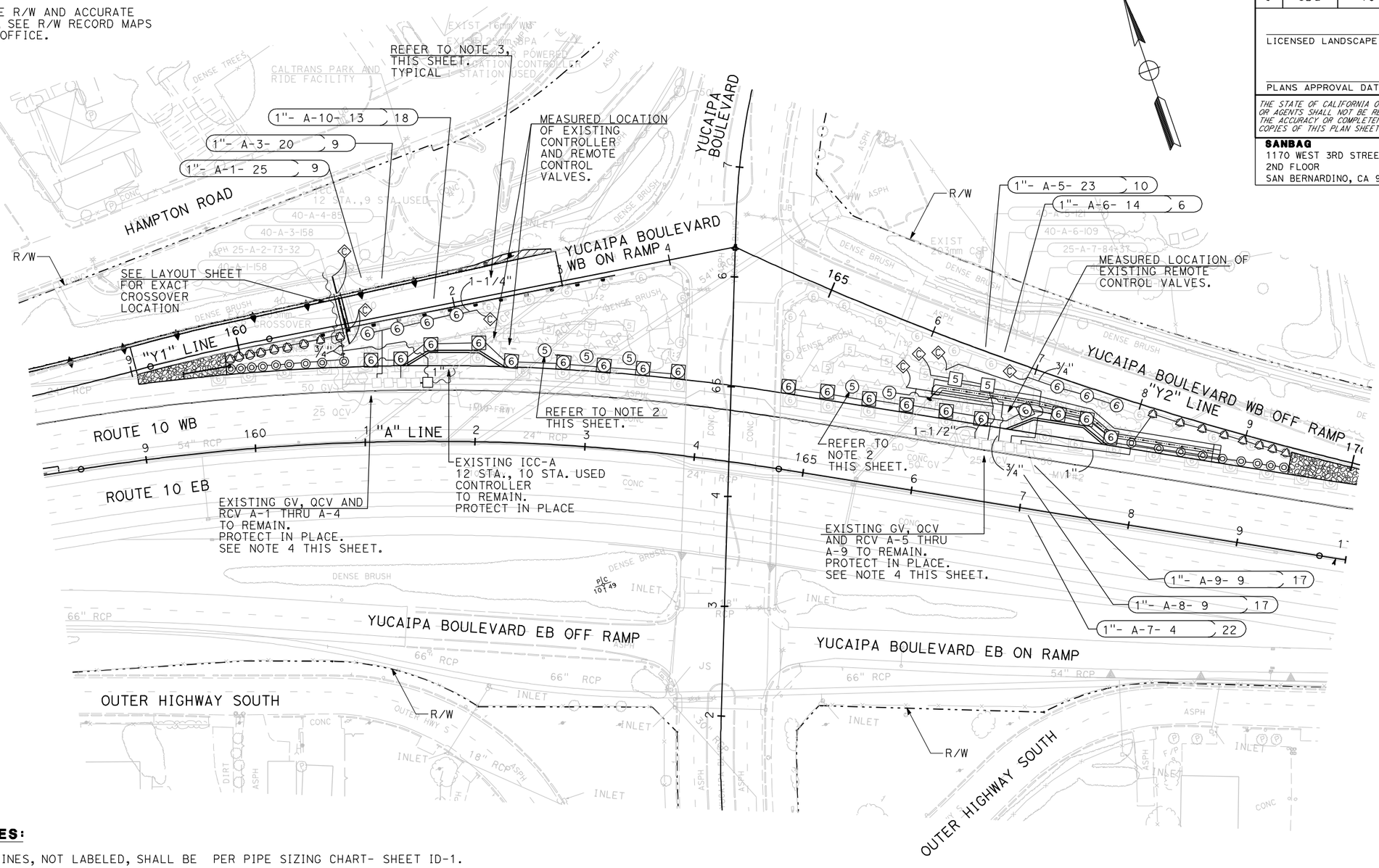

IRRIGATION NOTES:

1. ALL NEW LATERAL LINES, NOT LABELED, SHALL BE PER PIPE SIZING CHART- SHEET ID-1.
2. EXISTING A-5 (F) FULL HEAD SHRUB ROTORS TO BE REPLACED W/ A-5 (PC) HEADS. SALVAGED ROTORS TO BE RETURNED TO CALTRANS.
3. SIZE OF EXISTING IRRIGATION LATERAL LINES IS BASED ON PIPE SIZING CHART ON SHEET HP-25 FROM RECORD DRAWINGS DATED 9/22/05, EA 4192U1. CONTRACTOR TO VERIFY IN FIELD. IF EXISTING LATERAL FOUND TO BE DIFFERENT THAN SHOWN ON PLAN, (AT THE P.O.C.), CONTRACTOR SHALL ADJUST TO THE SIZE OF THE EXISTING LATERAL AND THEN SIZE ALL NEW LATERALS ACCORDING TO PIPE SIZING CHART ON SHEET ID-1 OF THESE PLANS.
4. PLACEMENT OF SYMBOLS FOR EXISTING IRRIGATION CONTROLLER AND VALVES ARE SHOWN IN HARDSCAPE FOR GRAPHIC CLARITY PER RECORD DRAWINGS. SEE MEASURED LOCATION CALL-OUT ON PLAN FOR ACTUAL LOCATION.
5. ALL IRRIGATION LATERAL LINES SHALL BE SCH 40 PVC. IRRIGATION MAINLINE SHALL BE CL 315 PVC.
6. CONTRACTOR TO REFER TO STANDARD DRAWING "H9" PLANTING AND IRRIGATION DETAILS WHEN INSTALLING WATERLINE AND SPRINKLER CONTROL CROSSOVERS IN THE CHDPE CONDUIT.

THIS PLAN ACCURATE FOR IRRIGATION WORK ONLY.

IRRIGATION PLAN

SCALE 1"=50'

IP-1

STATE OF CALIFORNIA - DEPARTMENT OF TRANSPORTATION

Caltrans

CONSULTANT FUNTIONAL SUPERVISOR: SHAWN T. BURCH

CALCULATED-DESIGNED BY | CHECKED BY | REVISED BY | DATE REVISED

LAST REVISION | DATE PLOTTED => 15-JUL-2009

BORDER LAST REVISED 2/1/2008 | RELATIVE BORDER SCALE IS IN INCHES 0 1 2 3 | USERNAME => dtruong | CU 0822 | EA 0F1500

Dist	COUNTY	ROUTE	POST MILES TOTAL PROJECT	SHEET No.	TOTAL SHEETS
8	SBd	10	33.3/R36.9	XXX	XXX

LICENSED LANDSCAPE ARCHITECT

PLANS APPROVAL DATE

LICENSED LANDSCAPE ARCHITECT — Shawn T. Burch — 2729 — Signature — 10-29-10 Renewal Date — Date — STATE OF CALIFORNIA

THE STATE OF CALIFORNIA OR ITS OFFICERS OR AGENTS SHALL NOT BE RESPONSIBLE FOR THE ACCURACY OR COMPLETENESS OF SCANNED COPIES OF THIS PLAN SHEET.

SANBAG
1170 WEST 3RD STREET
2ND FLOOR
SAN BERNARDINO, CA 92410

STB LANDSCAPE ARCHITECTS, INC.
15 SOUTH 5TH STREET
REDLANDS, CA 92373

SPRINKLER SCHEDULE

SYMBOL	TYPE	DESCRIPTION	SPRAY PATTERN	OPERATING PRESSURE (PSI)	PRESSURE COMPENSATING	PLUS/MINUS 5% ② DISCHARGE: GALLONS PER MINUTE (GPM)	DISCHARGE: GALLONS PER HOUR (GPH)	RADIUS (Ft)	WIDTH x LENGTH (Ft)	MATERIAL	INLET CONNECTION (NPT INCH)	POSITIVE-LOCKING ADJ ARC STOP	BACKSPLASH PREVENTER	DIFFUSER PIN	DISTANCE CONTROL FLAP	ADJ DISCHARGE	RISER: TYPE	RISER MATERIAL: PLASTIC	RISER MATERIAL: GALVANIZED	RISER: SIZE (IPS INCH)	RISER: HEIGHT (INCH)	RISER: FLOW SHUTOFF DEVICE	⑤ SWING JOINT (TYPE)	RISER SUPPORT	SPRINKLER PROTECTOR (TYPE)	REMARKS
[5]	A-5	GEAR DRIVEN	F	25	-	2.26	-	36	-	PL	¾"	-	-	-	-	X	IV	X	-	¾"	18"	X	1	X	-	SHRUB HEAD
⑤	A-5	GEAR DRIVEN	P	25	-	1.12	-	33	-	PL	¾"	-	-	-	-	X	IV	X	-	¾"	18"	X	1	X	-	SHRUB HEAD ⑦
⑥	A-6	GEAR DRIVEN	H	25	-	2.26	-	36	-	PL	¾"	-	-	-	-	X	VI	X	-	¾"	-	X	-	-	-	300 mm POP-UP
[6]	A-6	GEAR DRIVEN	P/H	25	-	2.26	-	36	-	PL	¾"	-	-	-	-	X	VI	X	-	¾"	-	X	-	-	1	POP-UP WITH CONCRETE PROTECTOR
△	A-11	ROTATOR	Q/H	40	X	.19	-	14′	-	PL	½"	-	-	-	-	X	VI	X	-	½"	-	X	-	-	-	300 mm POP-UP
△	A-11	ROTATOR	H	40	X	.40	-	20′	-	PL	½"	-	-	-	-	X	VI	X	-	½"	-	X	-	-	-	300 mm POP-UP
△	A-11	ROTATOR	H	40	X	.86	-	30′	-	PL	½"	-	-	-	-	X	VI	X	-	½"	-	X	-	-	-	300 mm POP-UP
◎	A-11	ROTATOR	Q/H	40	X	.19	-	14′	-	PL	½"	-	-	-	-	X	VI	X	-	½"	-	X	-	-	-	POP-UP WITH CONCRETE PROTECTOR
◎	A-11	ROTATOR	H	40	X	.40	-	20′	-	PL	½"	-	-	-	-	X	VI	X	-	½"	-	X	-	-	-	POP-UP WITH CONCRETE PROTECTOR
◎	A-11	ROTATOR	H	40	X	.86	-	30′	-	PL	½"	-	-	-	-	X	VI	X	-	½"	-	X	-	-	-	POP-UP WITH CONCRETE PROTECTOR

X IN BOX DENOTES REQUIREMENT

APPLICABLE WHEN CIRCLED BELOW:

1 - See Special Provisions.
2 - If a pressure compensating device is specified, the discharge and radii shown reflect its use.
3 - Arc Stop shall be fitted with a nut and bolt.
4 - Vinyl-coated cast iron housing.
5 - Swing Joints required adjacent to shoulders, curbs, sidewalks, and dikes.
6 - Unless otherwise shown on plans.
⑦ - Breakaway required adjacent to shoulder.

ABBREVIATIONS

F — full circle
P — part circle
F/P — full/part circle
Q — quarter circle
T — third circle
H — half circle
TT — two third circle
TQ — three quarter circle
CST — center strip
SST — side strip
EST — end strip
Ft — feet/foot
GPM — gallons per minute
GPH — gallons per hour
Adj — adjustable
PL — plastic
B/B — brass/bronze
B/PL — brass/plastic
B/B/PL — brass/bronze/plastic
NPT — national pipe thread
IPS — iron pipe size
PSI — pounds per square inch

PIPE SIZING CHART (PR 200) LATERAL LINE
TYPE A-5 AND A-6 POP-UP ROTORS

¾"	1"	1-1/4"	1-1/2"
0 GPM TO 8 GPM MAX. 0-3 HEADS	8 GPM TO 12 GPM MAX. 4-5 HEADS	12 GPM TO 22 GPM MAX. 5-9 HEADS	12 GPM TO 30 GPM MAX. 9-13 HEADS

PIPE SIZING CHART (PR 200) LATERAL LINE
TYPE A-11 POP-UP ROTATORS

NOZZLE	¾"	1"
	0 GPM TO 8 GPM MAX.	8 GPM TO 12 GPM MAX.
MP-1000	0-42 HEADS	43-63
MP-2000	0-20 HEADS	21-30
MP-3000	0-9 HEADS	10-14 HEADS

THIS PLAN ACCURATE FOR EROSION CONTROL AND LANDSCAPE WORK ONLY.

SPRINKLER SCHEDULE

ID-1

REVISED BY | DATE REVISED
CALCULATED-DESIGNED BY | CHECKED BY
CONSULTANT FUNTIONAL SUPERVISOR: SHAWN T. BURCH
STATE OF CALIFORNIA - DEPARTMENT OF TRANSPORTATION — Caltrans

LAST REVISION 00-00-00 | DATE PLOTTED => 15-JUL-2009

Dist	COUNTY	ROUTE	POST MILES TOTAL PROJECT	SHEET No.	TOTAL SHEETS
8	SBd	10	33.3/R36.9	XXX	XXX

REGISTERED CIVIL ENGINEER DATE

PLANS APPROVAL DATE

REGISTERED PROFESSIONAL ENGINEER ARIEF NAFTALI No. 64286 Exp. 6/30/11 CIVIL STATE OF CALIFORNIA

THE STATE OF CALIFORNIA OR ITS OFFICERS OR AGENTS SHALL NOT BE RESPONSIBLE FOR THE ACCURACY OR COMPLETENESS OF ELECTRONIC COPIES OF THIS PLAN SHEET.

SANBAG
1170 WEST 3RD STREET
2ND FLOOR
SAN BERNARDINO, CA 92410

AECOM
999 W. TOWN & COUNTRY RD
ORANGE, CA 92868

NOTES THIS SHEET:

1. INSTALL STATE-FURNISHED MODEL 170 CONTROLLER IN TYPE 334L CABINET (DETAIL PER TEES 2009, APPENDIX A6), WITH BATTERY BACK-UP SYSTEM. CONSTRUCT FOUNDATION PER ES-3C.

CONDUIT NOTES:

1. 2"C, 4-DLC (TYPE B)
2. 2"C, 8-DLC (TYPE B)
3. 3"C, 12-DLC (TYPE B)
4. 3"C, 18-DLC (TYPE B)
5. 2"C, 2#6 (TMS), 1#6 (GROUND)

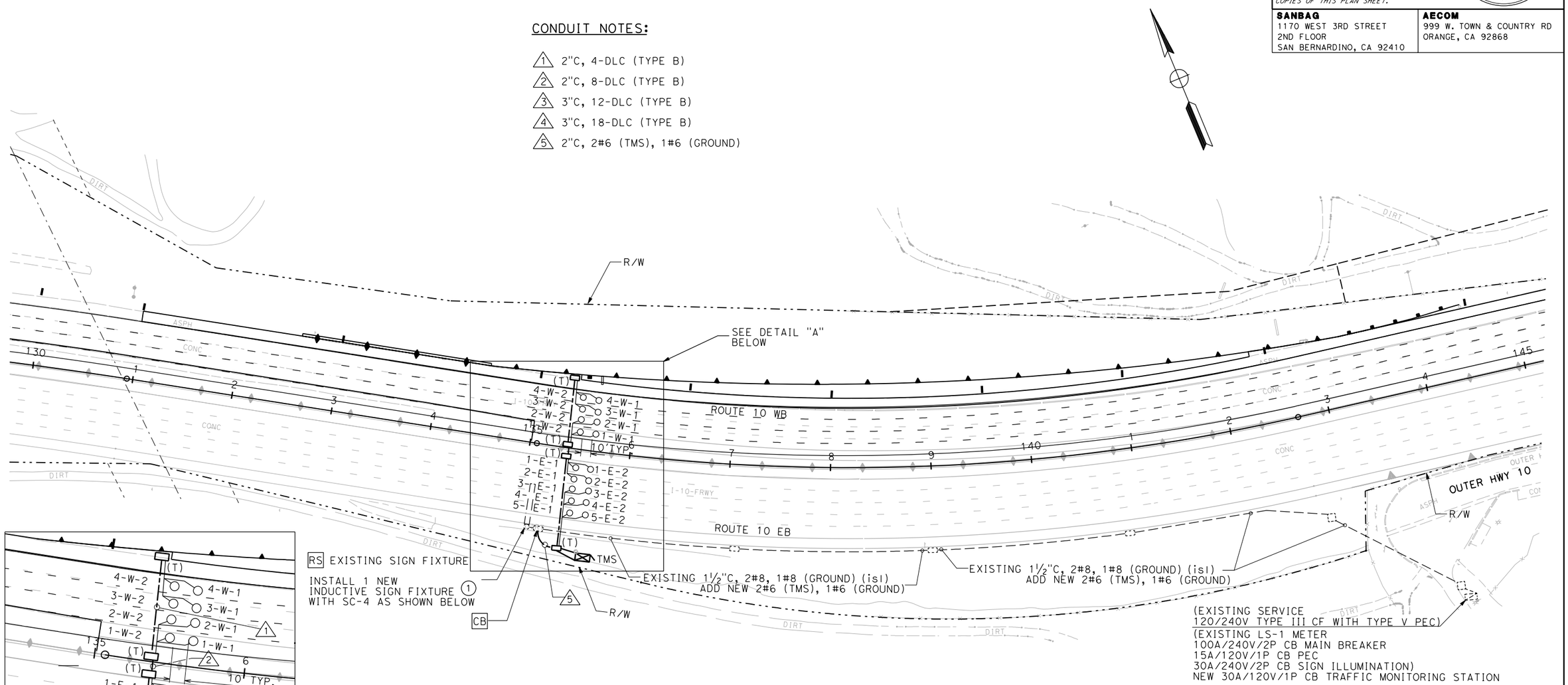

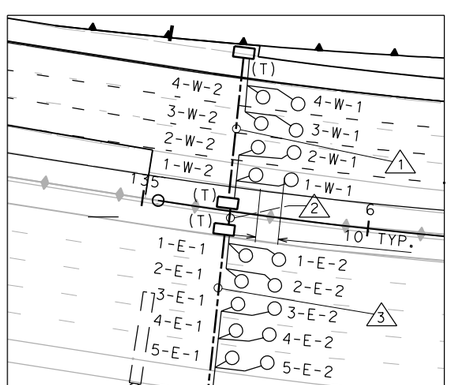

DETAIL "A"
NOT TO SCALE

ILLUMINATED SIGNS AND APPURTENANCES				
SIGN No.	QUANTITY OF 87 W ISL FIXTURES	VOLTAGE (SERVICE)	LOAD	REMARKS
1	1	240 V	87 W	SEE ES-15A, ES-15C, AND ES-15D TYPE LC-3 SIGN CONTROL

LIGHTING AND SIGN ILLUMINATION

SCALE 1"=50'

E-1

REVISED BY	DATE REVISED

CALCULATED-DESIGNED BY
CHECKED BY

CONSULTANT FUNCTIONAL SUPERVISOR
ED KOUZI

STATE OF CALIFORNIA - DEPARTMENT OF TRANSPORTATION
Caltrans

LAST REVISION 00-00-00
DATE PLOTTED => 7/1/2009
TIME PLOTTED => 10:44:18 AM

RELATIVE BORDER SCALE IS IN INCHES 0 1 2 3

USERNAME => SmithJH
DGN FILE => ...\0f150ua001.dgn

CU 08220

EA 0F1500

Dist	COUNTY	ROUTE	POST MILES TOTAL PROJECT	SHEET No.	TOTAL SHEETS
8	SBd	10	33.3/R36.9	XXX	XXX

REGISTERED CIVIL ENGINEER DATE

PLANS APPROVAL DATE

REGISTERED PROFESSIONAL ENGINEER ARIEF NAFTALI No. 64286 Exp. 6/30/11 CIVIL STATE OF CALIFORNIA

THE STATE OF CALIFORNIA OR ITS OFFICERS OR AGENTS SHALL NOT BE RESPONSIBLE FOR THE ACCURACY OR COMPLETENESS OF ELECTRONIC COPIES OF THIS PLAN SHEET.

SANBAG
1170 WEST 3RD STREET
2ND FLOOR
SAN BERNARDINO, CA 92410

AECOM
999 W. TOWN & COUNTRY RD
ORANGE, CA 92868

NOTES THIS SHEET:

1 RS EXISTING ELECTROLIER, REMOVE EXISTING FOUNDATION. CONSTRUCT NEW TYPE 30 MODIFIED PER RETAINING WALL 151 DETAILS NO. 1.

2 PROTECT-IN-PLACE EXISTING ELECTROLIERS AND THEIR FOUNDATIONS DURING CONCRETE BARRIER AND GUARD RAIL CONSTRUCTION.

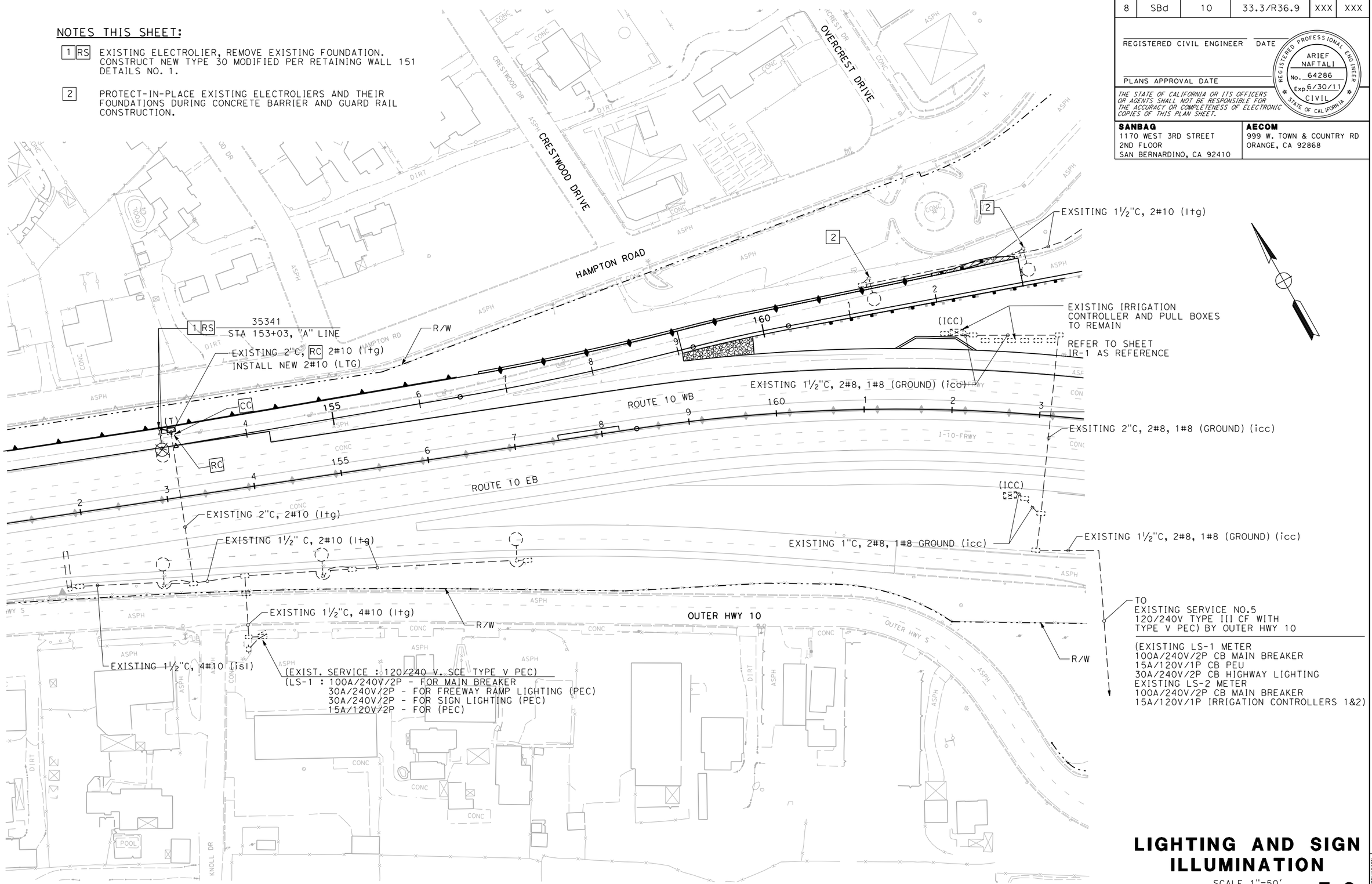

LIGHTING AND SIGN ILLUMINATION

SCALE 1"=50'

E-2

REVISED BY	DATE REVISED

CALCULATED-DESIGNED BY
CHECKED BY
CONSULTANT FUNCTIONAL SUPERVISOR
ED KOUZI

STATE OF CALIFORNIA - DEPARTMENT OF TRANSPORTATION
Caltrans

LAST REVISION 00-00-00
DATE PLOTTED => 7/1/2009
TIME PLOTTED => 10:44:22 AM

RELATIVE BORDER SCALE IS IN INCHES 0 1 2 3

USERNAME => SmithJH
DGN FILE => ...\0f150ua002.dgn

CU 08220

EA 0F1500

Dist	COUNTY	ROUTE	POST MILES TOTAL PROJECT	SHEET No.	TOTAL SHEETS
8	SBd	10	33.3/R36.9	XXX	XXX

REGISTERED CIVIL ENGINEER DATE

PLANS APPROVAL DATE

REGISTERED PROFESSIONAL ENGINEER ARIEF NAFTALI No. 64286 Exp. 6/30/11 CIVIL STATE OF CALIFORNIA

THE STATE OF CALIFORNIA OR ITS OFFICERS OR AGENTS SHALL NOT BE RESPONSIBLE FOR THE ACCURACY OR COMPLETENESS OF ELECTRONIC COPIES OF THIS PLAN SHEET.

SANBAG
1170 WEST 3RD STREET
2ND FLOOR
SAN BERNARDINO, CA 92410

AECOM
999 W. TOWN & COUNTRY RD
ORANGE, CA 92868

NOTES THIS SHEET:

1. INSTALL 2 # 8 CONDUCTORS FOR ILLUMINATED SIGN LIGHTING (ISL), 2 # 8 FOR LIGHTING (LTG) AND 1#8 GROUND.
2. RC 2-87 W EXISTING SIGN FIXTURES.
   RS 1-250 W EXISTING ROADWAY LIGHTING.
   REMOVE FOUNDATION COMPLETE

ILLUMINATED SIGNS AND APPURTENANCES

SIGN No.	QUANTITY OF 87 W ISL FIXTURES	VOLTAGE (SERVICE)	LOAD	REMARKS
2	2	240 V	175 W	SEE ES-15A, ES-15C, AND ES-15D TYPE LC-3 SIGN CONTROL

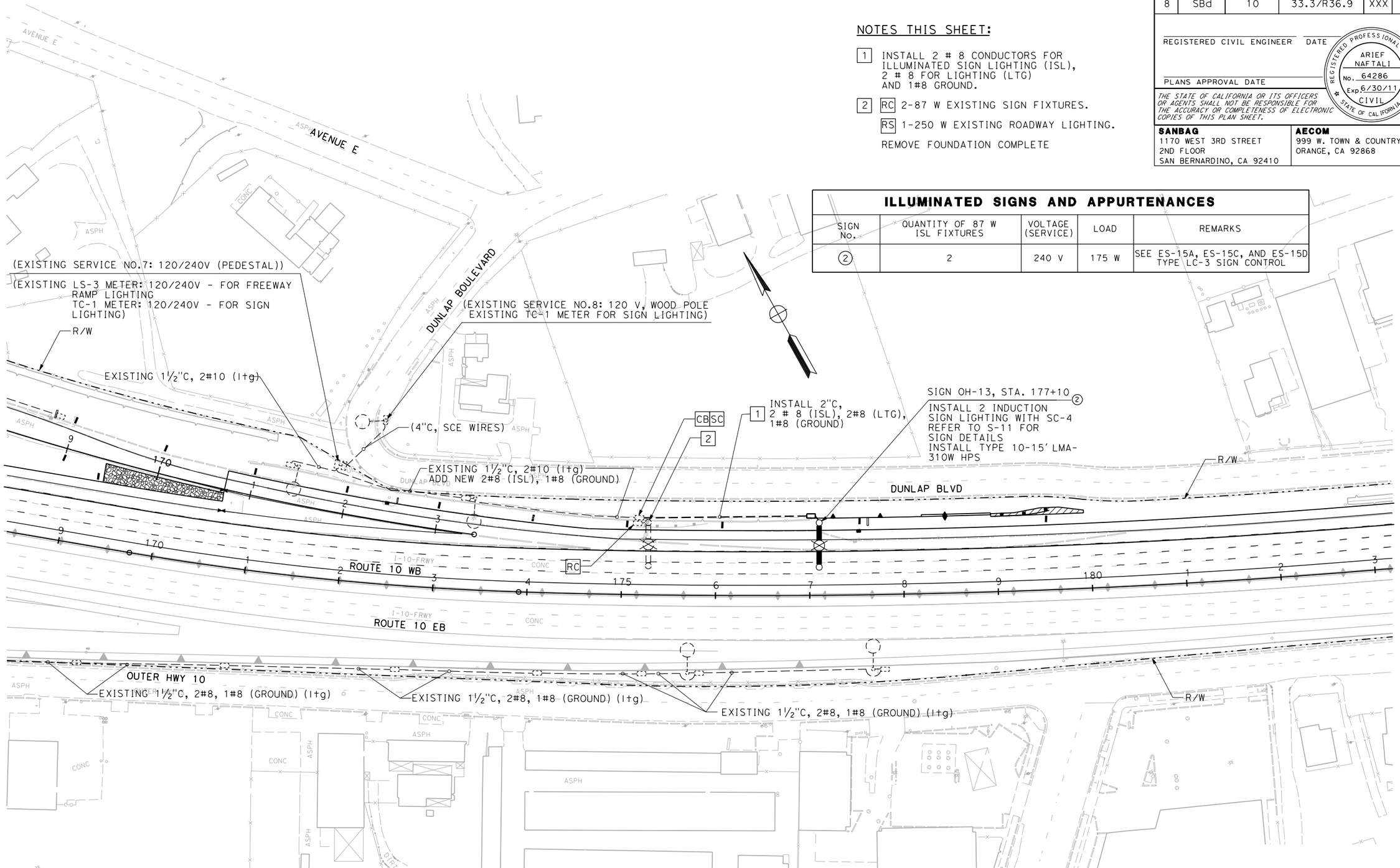

LIGHTING AND SIGN ILLUMINATION

SCALE 1'=50'

E-3

STATE OF CALIFORNIA - DEPARTMENT OF TRANSPORTATION

Caltrans

CONSULTANT FUNCTIONAL SUPERVISOR: ED KOUZI

CALCULATED-DESIGNED BY

CHECKED BY

REVISED BY

DATE REVISED

LAST REVISION 00-00-00 | DATE PLOTTED => 7/1/2009 | TIME PLOTTED => 10:44:24 AM

RELATIVE BORDER SCALE IS IN INCHES 0 1 2 3

USERNAME => SmithJH
DGN FILE => ...\0f150ua003.dgn

CU 08220

EA 0F1500