INVITATION FOR BIDS (IFB) 16-1001520

FOR

SAN BERNARDINO TRANSIT CENTER EMERGENCY GENERATOR & LANDSCAPE MODIFICATIONS PROJECT

IN

SAN BERNARDINO

KEY IFB DATES

IFB Issue Date:	**Tuesday – October 04, 2016**
Pre-Bid Conference Date:	**Thursday – October 13, 2016 @ 2:00 pm**
Written Questions/Approved Equal Request Deadline:	**Thursday – October 20, 2016 @ 4:00 pm**
Response To Questions:	**Monday - October 24, 2016**
Bid Due Date:	**Wednesday – November 16, 2016 @ 11:00 am**
Good Faith Efforts Due:	**FOUR (4) BUSINESS DAYS AFTER BID DUE DATE: November 16, 2016 @ 11:00 am**
Notice of Award Date:	**December 2016**
Notice To Proceed:	**January 2017**

San Bernardino Associated Governments

1170 W. 3rd Street, 2nd Fl, San Bernardino, CA 92410
Phone: (909) 884-8276 Fax: (909) 885-4407
Web: www.sanbag.ca.gov

•San Bernardino County Transportation Commission •San Bernardino County Transportation Authority
•San Bernardino County Congestion Management Agency •Service Authority for Freeway Emergencies

October 04, 2016

SUBJECT: NOTICE INVITING SEALED BIDS
INVITATION FOR BIDS (IFB) 16-1001520
"SAN BERNARDINO TRANSIT CENTER EMERGENCY GENERATOR & LANDSCAPE MODIFICATIONS PROJECT",
(hereinafter referred to as "Project")

The San Bernardino Associated Governments, ("SANBAG"), acting in the capacity designated in the contract attached to this IFB as Attachment "A", invites sealed bids for construction of the **San Bernardino Transit Center Emergency Generator & Landscape Modifications Project**, hereinafter referred to as "Project".

The IFB, including the Plans (Attachment "D"), Special Provisions (Attachment "C"), and bid forms for bidding this project can be obtained from SANBAG's website at www.sanbag.ca.gov, click "Vendor Portal".

Firms intending to submit a bid should note the "Key IFB Dates" on the cover of this IFB. SANBAG intends, subject to contract approval to have the selected firm under contract by January 2017. The IFB and IFB schedule updates and addenda, together with other important information are available on SANBAG's website at sanbag.ca.gov. Firms are requested to check the website periodically, and no less frequently than weekly, for IFB updates, addenda and other information. All bidders will be held accountable for compliance with all updates, addenda and other information posted on the website. Please note that SANBAG will not be responsible for mailing any addenda, schedule updates or other information to any firm.

A Pre-Bid Conference is scheduled for **2:00 p.m., Thursday – October 13, 2016** at SANBAG's office located at 1170 W. 3rd Street, San Bernardino, CA 92410, in the 1st Floor Board Conference room. Attendance at this Pre-Bid Conference is encouraged, but not mandatory. However, all bidders will be held accountable with all information and instructions given at the Pre-Bid Conference.

All questions and/or approved equal requests related to this IFB must be put in writing and submitted to SANBAG no later than **4:00 p.m., Thursday – October 20, 2016**. All questions and "approved equal" requests must be clearly labeled, **"Written Questions for IFB16-1001520",** and submitted electronically to:

David Gallardo
Procurement Analyst
procurement@sanbag.ca.gov

Questions and approved equal requests that are received after the deadline specified herein may or may not be responded to at the sole discretion of SANBAG, and the written responses will be posted via written addendum on SANBAG's website at www.sanbag.ca.gov, click "Vendor Portal."

Sealed bids shall be submitted at or before **11:00 a.m., on Wednesday – November 16, 2016**. Bids are to be delivered to:

SANBAG
1170 W. 3rd Street, 2nd Floor
San Bernardino, CA 92410-1715
Attention: David Gallardo – Procurement Analyst

Bids, and amendment to bids, received after the date and time specified in this IFB will be rejected by SANBAG and returned to the bidder unopened.

Bids will be publicly opened and read aloud on **Wednesday – November 16, 2016 @ 11:00 a.m**. at SANBAG's office at the address listed in this IFB.

General description of work:

The project will provide an exterior 250KW emergency generator set and generator yard enclosure for the new San Bernardino Transit Center. The project also includes the installation of additional landscaping and irrigation improvements at the site. The San Bernardino Transit Center is located at the southwest corner of Rialto Avenue and E Street in downtown San Bernardino.

As of January 1, 2015, all contractors and subcontractors bidding and performing work on Public Works Projects must register on an annual basis with the California Department of Industrial Relations (DIR), and effective April 1, 2015, furnish electronic payroll records for new projects to the Labor Commissioner.

This project is a Federal Transit Administration (FTA) funded project subject to Title 49, Part 661, Code of Federal Regulations (CFR) entitled, "Buy America" that provides Federal funds may not be obligated unless steel, iron, and manufactured products used in FTA-funded projects are produced in the United States, unless a waiver has been granted by FTA or the product is subject to a general waiver. A contractor or subcontractor shall not be qualified to bid on, be listed in a bid proposal, subject to the requirements of Section 4104 of the Public Contract Code, or engage in the performance of any contract for public work, as defined in this chapter, unless currently registered and qualified to perform public work pursuant to Section 1725.5 . It is not a violation of this section for an unregistered contractor to submit a bid that is authorized by Section 7029.1 of the Business and Professions Code or by Section 10164 or 20103.5 of the Public Contract Code, provided the contractor is registered to perform public work pursuant to Section 1725.5 at the time the contract is awarded.

If the contract is awarded, the contractor will be required to comply with all applicable laws and regulations, whether or not specifically listed in this IFB or the contract.

Award of this contract is subject to the availability, appropriation and receipt of federal, State and/or local funds sufficient to carry out the work identified in this IFB.

Bidders are to be fully informed respecting the DBE requirements and the Regulations as outlined in Attachment "B" DBE Regulatory Requirements. SANBAG is obligated to ensure nondiscrimination in the award and administration of all contracts and to create a level playing field on which DBEs can compete fairly for contracts and subcontracts. As the sub-recipient, SANBAG highly encourages the participation of DBE contractors and the utilization of DBE subcontractors in this project. In compliance with requirements set by Omnitrans, as direct recipient of funds, has an overall agency DBE goal of **8.4%** and any DBEs on this project will be used to satisfy the overall agency DBE goal.

SANBAG

INVITATION FOR BIDS IFB16-1001520

FOR

SAN BERNARDINO TRANSIT CENTER
EMERGENCY GENERATOR & LANDSCAPE MODIFICATIONS PROJECT

I. INSTRUCTION TO BIDDERS

The San Bernardino Associated Government ("SANBAG"), acting in its capacity designated in the contract attached hereto as Attachment "A", "Contract", is soliciting bids from qualified firms ("firms" or "bidders"), to provide an exterior 250KW emergency generator set and generator yard enclosure for the new San Bernardino Transit Center. The project also includes the installation of additional landscaping and irrigation improvements at the site. The San Bernardino Transit Center is located at the southwest corner of Rialto Avenue and E Street in downtown San Bernardino.

A. IFB DOCUMENTS

The IFB, including the Plans (Attachment "D"), Special Provisions (Attachment "C"), and bid forms for bidding this project can be obtained from SANBAG's website at www.sanbag.ca.gov, click "Vendor Portal".

B. CONTACT INFORMATION

All inquiries, contacts or questions related to this IFB shall be directed to:

SANBAG
1170 W. 3rd Street, 2nd Floor
San Bernardino, CA 92410-1715
(909) 884-8276
Attention: David Gallardo – Procurement Analyst
procurement@sanbag.ca.gov

Bidders must not discuss this IFB with any official, Board Member or employee of SANBAG, other than the staff identified herein. Neither bidders, nor anyone representing the bidder, are to discuss this IFB with any consultant or contractor engaged by SANBAG for assistance in preparing a response to the IFB. Violation of this prohibition may result in disqualification of the bidder.

C. PRE-BID CONFERENCE

A Pre-Bid Conference is scheduled for **Thursday – October 12, 2016 @ 2:00 p.m.,** at SANBAG's office located at 1170 W. 3rd Street, San Bernardino, California, 92410, in the 1st Floor Board Conference Room. Interested firms are strongly encouraged to attend the Pre-Bid Conference, but no firm will be disqualified for failure to attend. However, all bidders will be held accountable for compliance with all information and instructions given at the Pre Bid Conference. Firms are asked to check-in at the security desk and will be directed to the board meeting room.

D. EXAMINATION OF BID DOCUMENTS/INFORMED BIDDER

By submitting a bid, the bidder represents and acknowledges that it has thoroughly reviewed the requirements of this IFB, including all documents, contractual requirements, Plans (Attachment "D") and specifications and has become familiar with the work identified in this IFB. Bidder also acknowledges that they are satisfied with the general and local conditions to be encountered; the character, quality, and scope of work to be performed; quantities and type of materials to be furnished; and character, quality, and quantity of surface and subsurface materials or obstacles.

E. WRITTEN QUESTIONS/APPROVED EQUALS

All questions, clarifications or approved equal requests, including oral questions that could not be addressed at the Pre-Bid Conference must be put in writing and submitted electronically to procurement@sanbag.ca.gov, and they must be received by SANBAG **no later than 4:00 p.m. on Thursday – October 20, 2016.** Questions and approved equal requests must be clearly labeled "Written Questions/Approved Equals". SANBAG is not responsible for failure to respond to questions that are not appropriately marked. Questions received by the date and time identified in this IFB, and SANBAG's responses will be posted on SANBAG's website at www.sanbag.ca.gov, click "Vendor Portal."

Any request for an approved equal must be fully supported with technical data or other relevant information as evidence of support that the substitute meets or exceeds the current specification requirements. The burden of proof as to the suitability, equality and compatibility rests solely with the bidder. SANBAG shall be the sole judge as to the suitability, equality and compatibility of the proposed equal.

F. ADDENDA

Any changes to this IFB will be made by written addendum and posted on SANBAG's website. SANBAG will not be bound to any modifications to or deviations from the requirements set forth in this IFB as a result of any oral discussions and/or instructions. Firms shall acknowledge receipt of any addenda in their bid.

G. CONFLICT OF INTEREST

A firm that has provided architectural or engineering services to SANBAG for the work identified in this IFB, before bid submittal is prohibited from any of the following; submitting a bid; subcontracting for any part of the work identified herein; and/or supplying materials.

H. PRE CONTRACTUAL EXPENSES

SANBAG shall not be liable for any pre-contractual expenses incurred by the bidder in preparation or submittal of their bid. The bidder shall not include any such expenses in their bid. Prohibited pre-contractual expenses include any and all expenses incurred by the bidder prior to issuance of the Notice to Proceed by SANBAG.

I. IRAN CONTRACTING ACT OF 2010 *- Intentionally Omitted*

J. JOINT BIDS

Where two or more firms desire to submit a single bid in response to this solicitation, they should do so on a prime-subcontractor basis rather than as a joint venture. SANBAG intends to contract with a single firm and not with multiple firms doing business as a joint venture.

J. PREVAILING WAGES

The work proposed in this IFB will be financed in whole or in part with federal funds; therefore, all statutes, rules and regulations promulgated by the federal government apply. The Federal Prevailing Wage rates for this project are predetermined by the United States Secretary of Labor under the Davis-Bacon Act (40 U.S.C. 27a). Similarly, the project may also require compliance with the Labor Code of the State of California commencing in Section 1770 et seq. All contractors shall be bound by federal and California law regarding definitions, work subject to prevailing wages, duties, responsibilities and rights of the parties, wage determinations, the petitions to review prevailing wage determinations, the certification of payroll records, including requests, content and cost; the withholding of funds from contractor and hearing procedure. All pertinent federal and state statutes and regulations, including but not limited to those referenced above are hereby incorporated by reference into this document as though set forth in their entirety.

Wage schedules will be set forth in the wage determination(s) issued to bidders by SANBAG in an addendum to this IFB and in copies of this IFB that may be examined at the offices described above where the project Plans (Attachment "D"), Special Provisions (Attachment "C") and bid forms can be reviewed. The wage schedules are also accessible via the Internet at www.dir.ca.gov/DLSR/statistics_research.html and www.access.gpo.gov/davisbacon/.

Wherever there is a difference between the prevailing wage rates predetermined by the Secretary of Labor (federal) and the General Prevailing Wage rates determined by the Director of the California Department of Industrial Relations for similar classifications of labor, the contractor and subcontractors shall pay not less than the higher of the two wage rates. SANBAG will not accept State wage rates not specifically included in the federal minimum wage determinations. This includes "helper" (or other classifications based on hours of experience) or any other classification not appearing in the Federal wage determinations. Where federal wage determinations do not contain State wage rate determination otherwise available for use by the contractor and subcontractors, the contractor and subcontractors shall pay not less than the federal minimum wage rate, which most closely approximates the duties of the employee(s) in question.

Effective June 20, 2014, the Department of Industrial Relations (DIR) made changes to the administration and enforcement of prevailing wage requirements including a contractor's registration program. Contractors are required to register and meet the online requirements as identified in DIR application before submitting a public works bid in the State of California. Additional information can be found at dir.ca.gov.

K. NON-DISCRIMINATION

The contract, if awarded, is subject to State Contract Nondiscriminatory and Compliance Requirements pursuant to Government Code, section 12900. The contractor or subcontractor shall not discriminate on the basis of race, color, national origin, or sex in the performance of this contract. The contractor shall carry out applicable requirements of 49 CFR, Part 26 in the award and administration of DOT-assisted contracts. Failure by the contractor to carry out these requirements is a material breach of this Contract, which may result in the termination of this contract, or such other remedy, as SANBAG deems appropriate.

L. TAXES

The amount of the bid must be inclusive of state and local sales tax, which remains the obligation of the contractor. The contractor is responsible for payment of all taxes for any goods, services, processes and operations for this contract.

M. FEDERAL REQUIREMENTS

This project is financed in part with federal funds, and therefore, all of the statutes, rules and regulations by the federal government applicable to the work being performed will apply to this project including "Buy America".

N. LICENSING REQUIREMENTS

The contractor shall possess a **Class A or B** license at the time of award through Project acceptance by SANBAG. Bidder shall ensure that all subcontractors comply with the appropriate licensing requirements as identified in the State of California Public Contract Code section 20103.5.

II. BID SUBMITTAL

A. Bids must be submitted on the forms provided in "Bid Forms" included in this IFB. Bidders are responsible for ensuring that the Bid Forms are properly completed. Only original Bid Forms (no photo copies) will be allowed unless otherwise stated elsewhere in this IFB. If any forms are incomplete or missing, the Bid may be considered non-responsive and subject to rejection at the sole discretion of SANBAG.

B. Bids must be submitted **at or before 11:00 a.m., Wednesday – November 16, 2016. Bids received after the due date and time will be rejected by SANBAG and returned to the bidder unopened.**

C. Bidders shall submit their bid in a sealed package clearly marked with the following: (i) the company name and address; and submitted to:

David Gallardo – Procurement Analyst
SANBAG
1170 W. 3rd Street, 2nd Floor
San Bernardino, CA 92410-1715
ATTENTION: BID FOR IFB No. 16-1001520

D. Bidders shall be responsible for any consequences, including disqualification of the bid, resulting from any inadvertent opening of improperly identified packages. It is the bidder's sole responsibility to see that its bid is received as required in this IFB.

E. Bids will be publicly opened and read out loud at SANBAG's offices at 1170 W. 3rd Street, San Bernardino, CA in the 1st Floor Board Conference Room at approximately 11:00 a.m. Bidders must check in at the security desk and will be directed to Board Conference Room where bids will be opened.

F. Please note that where two or more firms, persons or entities wish to submit one bid in response to this IFB, they should do so on a prime/subcontractor basis rather than as a joint venture. SANBAG will contract with a single firm, person or entity only and not with a joint venture.

III. ACCEPTANCE OF BIDS

SANBAG reserves the right to accept or reject any or all bids, to waive any informalities or irregularities in any bid to determine which bid is the lowest responsive bid of a responsible bidder and which bid should be accepted in the best interest of SANBAG. SANBAG reserves the right to accept, to withdraw, or to cancel this IFB at any time without prior notice and SANBAG makes no representation that any contract will be awarded to any firm responding to this IFB.

IV. WITHDRAWAL OF BIDS

A bidder, or authorized agent of a bidder, may withdraw its bid at any time before the bid opening date and time by submitting a written request to SANBAG, Attn: Contract Administrator at the address identified in this IFB. Withdrawing a bid prior to bid opening does not prevent a bidder from submitting a timely new bid. After bid opening, the bid shall remain open and not withdrawn for a period of sixty (60) calendar days from the date prescribed for its opening.

V. BID SECURITY FORMS

A. Bid Bond – Each bid shall be accompanied by a bid guaranty in the amount of ten percent (10%) of the bidder's bid amount in the form of (i) cash, (ii) a cashier's check made payable to SANBAG; (iii) a certified check, made payable to SANBAG; or (iv) a Bidder's Bond executed by an admitted surety insurer (as defined in Code of Civil Procedure §995.660) made payable to SANBAG. The admitted surety executing a Bidder's Bond must be registered to do business in San Bernardino County. If the bidder fails or refuses to enter into a contract, if awarded, the bond shall be forfeited to SANBAG.

B. Performance/Payment Bond – The successful bidder shall furnish to SANBAG a Payment and Performance Bond on the forms provided in this IFB, in the amount of one hundred percent (100%) of the bid amount per the requirements defined herein.

VI. SUBCONTRACTOR LISTING

Pursuant to California Public Contract Code section 4104, the bidder shall identify the following in their bid:

a. The name and address of each subcontractor performing work or rendering a service to the bidder in an amount in excess of one-half of one percent of the total bid amount, or $10,000, whichever is greater; and

b. Show the portion of work by bid item number, description and percentage of each bid item subcontracted.

The bidder shall list only one subcontractor for each portion of work as identified in its bid and shall complete and submit the subcontractor listing form presented in this IFB package as part of their bid. The successful bidder shall perform work equivalent to at least ten percent (10%) of the total amount of the work with its own forces. If the bidder is not proposing to use subcontractors, or the portion of the work is less than ½ of 1%, or $10,000, the bidder is to acknowledge the subcontractor listing form in this IFB with "Not Applicable".

The bidder shall complete the form entitled "Listing of Subcontractors" contained in this IFB. Section A of the form, must be completed and submitted with the bid. Section B of the form shall be completed and submitted to SANBAG within 24 hours of the Bid Due Date.

VII. DISADVANTAGED BUSINESS ENTERPRISE

As a sub-recipient of Federal Transportation Administration (FTA) funds, SANBAG is required to comply with all regulations in conformance with Title 49, Code of Federal Regulations (CFR), Part 26, entitled "Participation by Disadvantaged Business Enterprises (DBE) in Department of Transportation Financial Assistance Programs ("Regulations"). The Regulations in their entirety are incorporated herein by this reference. As sub-recipient, SANBAG is obligated to comply with the regulations set forth by Omnitrans as the direct recipient of federal funds having established a Race Neutral Federal Transportation Administration (FTA) DBE program and as such, there is no DBE goal on this project. However, it is the Obligation of SANBAG to ensure nondiscrimination in the award and administration of all contracts and to create a level playing field on which DBEs can compete fairly for contracts and subcontracts. As the sub-recipient, SANBAG highly encourages the participation of DBE contractors and the utilization of DBE subcontractors in this project. In compliance with requirements set by Omnitrans, as direct recipient of funds, has an overall agency DBE goal of **8.4%** and any DBEs on this project will be used to satisfy the overall agency DBE goal.

Bidders must complete and submit to SANBAG the following forms no later than the close of business four (4) business days from the Bid Due Date:

- Form 12-B, "Bidders List of Subcontractors (DBE and Non DBE Required) ½ of 1% or $10,000.00 Share of Project)" Parts I and II
- Form 15-G, "Local Agency Bidder DBE Commitment", and
- Form 15-H, "DBE Information-Good Faith Efforts"

In order to be considered responsible and responsive bidders must meet the Contract specific DBE goal identified in this IFB or make Good Faith Efforts to meet the goal established for this Contract. If the goal is not met, the bidder must document adequate Good Faith Efforts. Only DBE firms certified through the California Unified Certification Program (CUCP) will be counted towards the contract goal; however, all DBE participation shall be collected and reported. Please refer to Attachment "B" of this IFB for detailed information, instructions, and forms outlined in the DBE regulatory Requirements. Bidders are advised that questions related to the DBE requirements must be submitted as a written question per the instructions in this IFB.

VIII. CONTRACT AWARD

Any contract awarded as a result of this IFB, will be awarded to the lowest responsive, responsible bidder in accordance with this IFB. The successful bidder shall be required to perform all the terms and conditions of SANBAG's Contract as identified in the form attached hereto as Attachment "A".

IX. EXECUTION OF CONTRACT

The successful bidder shall submit to SANBAG the executed contract together with the required Performance and Payment Bonds, certificates of insurance, Non Lobbying

Certifications For Federal-Aid Contracts w/ Disclosure Forms, Certification Regarding Debarment, Suspension and Other Ineligibility and Voluntary Exclusions for the prime and its subcontractors, if applicable, within ten (10) working days from the date of the Notice of Award issued by SANBAG. Failure to submit the documents cited and to execute the contract within the specified time shall be just cause for the annulment of the award and the forfeiture of the bidder's Bid Bond.

X. PROTEST INFORMATION

SANBAG has on file written Protest Procedures (Policy 11007). Firms may download a copy from http://www.sanbag.ca.gov under "Contractor Opportunities".

XI. PUBLIC RECORDS ACT

Bids may be subject to public disclosure under the California Public Records Act and other public records laws, and by submitting a bid, the bidder waives all rights to confidentiality of any information submitted in the bid and agrees to any and all such disclosures required or permitted by law. Bids become the property of SANBAG when submitted and by submitting a bid; the bidder agrees that SANBAG may use any information, documentation or writing contained in the bid for any SANBAG purpose.

BID FORMS

FORMS TO BE SUBMITTED AT TIME OF BID

1. Bid Form
2. Bidders Bond
3. Non-Collusion Affidavit
4. Listing of Subcontractors- Section A. Section B to be submitted within 24 hours after the bid due date.
5. Notice of Requirements for Affirmative Action to Ensure Equal Employment Opportunity (Executive Order 11246)
6. Bidders Certificate of Compliance – Worker's Compensation Insurance
7. Non-Lobbying Certification for Federal-Aid Contracts w/Disclosure Form, if applicable – (LLL Form) (Prime)
8. Public Contract Code section 10162 Questionnaire
9. Public Contract Code section 10285.1 Statement
10. Certification Regarding Debarment, Suspension and Other Ineligibility and Voluntary Exclusion- Primary Participant
11. Buy America Certification
12. Certification for Clean Air Act and Federal Water Pollution Control

DBE FORMS MUST BE SUBMITTED WITHIN FOUR (4) BUSINESS DAYS AFTER BID DUE DATE

1. DBE Exhibit 12-B - "Bidders List of Subcontractors (DBE and Non DBE)" (Required > ½ of 1% or $10,000 Share of Project) Part 1 and Part II
2. DBE Exhibit 15-G - "Local Agency Bidder DBE Commitment"
3. DBE Exhibit 15-H - "DBE Information-Good Faith Efforts", with all applicable back-up documentation.

FORMS THAT MUST BE SUBMITTED WITHIN TEN (10) BUSINESS DAYS AFTER NOTICE OF AWARD

1. Executed Contract – signed by contractor
2. Payment Bond – 100% of Bid amount
3. Performance Bond – 100% of Bid amount
4. Insurance Certificates with endorsements
5. Non-Lobbying Certification for Federal-Aid Contracts w/Disclosure Form, if applicable (LLL) (subcontractors)
6. Certification Regarding Debarment, Suspension and Other Ineligibility and Voluntary Exclusion Form, if applicable– Lower Tier (subcontractors)

BID FORM
SAN BERNARDINO TRANSIT CENTER
EMERGENCY GENERATOR & LANDSCAPE MODIFICATIONS PROJECT
CONTRACT NO. 16-1001520

Name of Bidder: _____

Business P.O. Box: _____

Business Street Address: _____

City, State, Zip: _____

Telephone No.: _____

Fax No.: _____

Date: _____

Contractor's License Number / Classification _____

The work for which this bid is submitted is for the construction in conformance with the Invitation for Bid, Special Provisions (Attachment "C") including the payment of not less than the higher of State general prevailing wage rates or Federal Prevailing wage rates, as defined in the Invitation For Bids, the project Plans (Attachment "D") and specifications described below, including **any Addenda** thereto, the Contract annexed hereto, the Labor Surcharge and Equipment Rental Rates in effect on the date the work is accomplished, and the General Prevailing Wage Rates most current edition at the date of the bid opening.

Accompanying this bid is a "Cashier's Check", "Certified Check", or "Bidders Bond" **(Circle applicable term as the case may be),** made payable to the SAN BERNARDINO ASSOCIATED GOVERNMENTS for the sum of_____ Dollars ($), _____ in an amount equal to ten percent (10%) of the total bid amount.

If the Cashier's Check or Certified Check accompanies this bid as the guarantee, then the proceeds thereof shall become the property of the San Bernardino Associated Governments if, in the case this bid is accepted by said Board of San Bernardino Associated Governments or Authorized Representative, and such bidder has received a Notice of Award issued by SANBAG, the undersigned shall fail within ten (10) business days, not including Saturdays, Sundays and legal holidays, thereafter to execute a Contract with, and furnish the securities required by said Board of San Bernardino Associated Governments or authorized representative. Otherwise, such guarantee shall be returned to the undersigned.

BID FORM
IFB16-1001520

The undersigned hereby acknowledges the following:

1. The Project Plans (Attachment "D"), Special Provisions, and Specifications (Attachment "C") dated August 8, 2016 and Invitation for Bid, Special Provisions (Attachment "C") and other related documents dated for the work to be done are entitled: **San Bernardino Transit Center Emergency Generator & Landscape Modifications Project**

   This bid is submitted with respect to the changes to the IFB documents included in the Addenda issued. Bidder further acknowledges the receipt of the following Addenda Number(s): insert number(s) _____.

2. The bidder has thoroughly examined and is familiar with the work required and the documents of this IFB. By investigation at the site of the work and otherwise, the bidder is satisfied as to the nature and location of the work and is fully informed as to all conditions and matters, which can affect the work performed and the cost thereof.

3. Bidder fully understands the scope of the work and specifications identified in this IFB and has carefully checked all words and figures inserted in this IFB and further understands that SANBAG will not be liable for any errors or omissions in the preparation of this bid.

4. Bids are required for the entire work. The amount of the bid for comparison purposes will be the total of all items. The total of unit basis items will be determined by extension of the item price bid on the basis of the estimated quantity set for the item.

5. The bidder shall set forth for each unit basis item of work a unit price and a total for the item, and for each lump sum item a total for the item, all in clearly legible figures in the respective spaces provided for that purpose. In the case of unit basis items, the amount set forth under the "Item Total" column shall be the product of the unit price bid and the estimated quantity for the item.

6. In case of discrepancy between the unit price and the total set forth for a unit basis item, the unit price shall prevail, except as provided in (a) or (b) as follows:

(a) If the amount set forth as a unit price is unreadable or otherwise unclear, or is omitted, or is the same as the amount of the entry in the item total column, then the amount set forth in the item total column for the item shall prevail and shall be divided by the estimated quantity for the item and the price thus obtained shall be the unit price;

(b) (Decimal errors) If the product of the entered unit price and the estimated quantity is exactly off by a factor of ten, one hundred, etc., or one-tenth, one-hundredth, etc., from the entered total, the discrepancy will be resolved using the entered unit price or item total, whichever most closely approximates percentage-wise the unit price or item total in SANBAG's final estimate of cost.

If both the unit price and the item total are unreadable or otherwise unclear, or are omitted, the bid may be deemed irregular. Likewise if the item total for a lump sum item is unreadable or otherwise unclear, or is omitted, the bid may be deemed irregular unless the project being bid has only a single item and a clear, readable total bid is provided. Symbols

such as commas and dollar signs will be ignored and have no mathematical significance in establishing any unit price or item total or lump sums. Written unit prices, item totals and lump sums will be interpreted according to the number or digits and, if applicable, decimal placement. Cents symbols also have no significance in establishing any unit price or item total since all figures are assumed to be expressed in dollars and/or decimal fractions of a dollar. Bids on lump sum items shall be item totals only; if any unit price for a lump sum item is included in a bid and it differs from the item total, the item's total shall prevail.

The foregoing provisions for the resolution of specific irregularities cannot be so comprehensive as to cover every omission, inconsistency, error or other irregularity, which may occur in a bid. Any situation not specifically provided for will be determined in the discretion of SANBAG, and that discretion will be exercised in the manner deemed by SANBAG to best protect the public interest in the prompt and economical completion of the work. The decision of SANBAG respecting the amount of a bid, or the existence or treatment of an irregularity in a bid shall be final.

7. If this Bid is accepted and the undersigned fails to execute the Contract and furnish the Performance and Payment bonds, insurance certificates, and the Required Documents within ten (10) working days, not including legal holidays, after the date of SANBAG's delivery to Bidder of the Notice of Award, SANBAG may, at its option, determine that the Bidder has abandoned the Contract, and thereupon this Bid and the acceptance thereof shall be null and void and the forfeiture of the bid security accompanying this Bid shall operate and the same shall become the property of SANBAG.

8. The undersigned, as Bidder, declares that the only persons or parties interested in this Bid as principals are those named herein; that this bid is made without collusion with any other person, firm or corporation; that the Bidder has carefully examined the location of the proposed work, the Contract, any addenda issued, and the Plans (Attachment "D") referred to herein, having become thoroughly familiar with the terms and conditions of the Contract Documents and with the local conditions affecting the performance and cost of the work at the place where the Work is to be done, and the bidder hereby proposes, and agrees if this bid is accepted, that the Bidder will contract with SANBAG, in the form of the copy of the Contract annexed hereto, to provide all necessary labor, machinery, tools, apparatus, and other means of construction, and to do all the work and furnish all the materials specified in the Contract, in the manner and time therein prescribed, and in accordance with the requirements of SANBAG as herein set forth, and that he/she will accept as full payment therefore the following prices, to wit:

IFB 16-1001520
BID ITEMS

ITEM NO.	ITEM CODE	ITEM DESCRIPTION	UNIT MEASURE	ESTIMATED QUANTITY	UNIT COST	TOTAL COST
		BID LIST - GENERAL REQUIREMENTS				
1	01 23 50	Contractor's Daily Overhead Rate	Days	130		
2	01 32 15	Project Schedule and Progress Documentation	LS	1		
3	01 50 00	Mobilization	LS	1		
4	01 50 00	Demobilization	LS	1		
5	01 57 19	SWPPP Best Management Practices Implementation (Including, but not limited to dust control, Stormwater Pollution Prevention (SWPP), soil erosion, sediment control, top soiling seeding)	LS	1		
		DEMOLITION				
6	02 41 00	Demolition	LS	1		
7	31 11 00	All Site Preparation, Cutting & Patching, Excavation & Rough grading, Trenching, Backfilling, Compacting and other appurtenances	LS	1		
		CONCRETE				
8	03 11 00 03 18 13 03 21 00 03 31 00 04 05 10	All Concrete Formwork, Surface Sealer, Reinforcing Steel, Materials and Mix, Concrete Paving Type 2 and other appurtenances	LS	1		
		METALS				
9	05 05 00 05 12 10 05 50 10	All Metals and other appurtenances including bollards	LS	1		
		LANDSCAPE				
10	32 93 00	All Trees, Shrubs, Ground Cover, Irrigation and other appurtenances	LS	1		
11	32 93 00	1 Year Maintenance	SF	51,554		
		HARDSCAPE/EXTERIOR IMPROVEMENTS				
12	32 13 13	Concrete Paving Type I	SY	12		
13	32 15 00	Decorative Gravel (HEAVY DUTY)	CY	201		

IFB 16-1001520 BID ITEMS						Page 2 of 2
ITEM NO.	**ITEM CODE**	**ITEM DESCRIPTION**	**UNIT MEASURE**	**ESTIMATED QUANTITY**	**UNIT COST**	**TOTAL COST**
14	32 16 00	6" Concrete over 6" Crushed Aggregate Base	SY	816		
		GENERATOR ENCLOSURE				
15	05 12 10	Construct ancillary enclosures & screening	LS	1		
16	08 71 00	All Openings, including hardware for new and existing	LS	1		
17	09 91 13	Exterior Painting	LS	1		
18	09 96 23	Anti- Graffiti Coating	LS	1		
19	26 00 00	All New Lighting & Electrical including Commissioning	LS	1		
20	28 00 00	All Electronic Safety & Security Systems (not including item for 08 71 00)	LS	1		
21	10 14 03	All Wayfinding & Permanent Signage	LS	1		
22	10 44 00	Fire extinguisher	LS	1		
		EXISTING CANOPY LIGHTING				
23	26 56 00	New Lighting for existing building canopy	LS	1		
					TOTAL BID AMOUNT	

EA – Each
LF – Lineal Foot
LS – Lump Sum
SF – Square Foot
SY – Square Yard

Contract quantities are approximate quantities that have been calculated from the lines shown on the Plans (Attachment "D"), with no allowance for shrinkage, swelling, overbuild, or waste.

Note to Bidder: Quantities shown in the Bid Item List are for reference only and it is Contractor's sole responsibility to determine the exact quantities necessary to execute and complete the Work. Contract quantities will be paid on a percentage complete value for the Total Cost extended to the right for each line of the Bid Item List, not by the product of Estimated Quantity and Unit Cost.

SANBAG
BID FORM
IFB16-1001520
(Continued)

9. It is understood that SANBAG reserves the right to reject the bid and that it shall remain open and not withdrawn for a period of sixty (60) calendar days from the date of the bid opening.

10. In accordance with the provisions of sections 1860 and 1861 et seq. of the California Labor Code, every contractor will be required to secure the payment of compensation of his employees. Each contractor to whom a public works contract is awarded shall certify that he/she is aware of the provisions of section 3700 of the Labor Code which requires every employer to be insured against liability for worker's compensation or to undertake self-insurance in accordance with the provisions of that code, and he/she will comply with such provisions before commencing the performance of the work of this contract.

11. In accordance with California Public Contract Code section 10232, the bidder hereby states under penalty of perjury, that no more than one final unappealable finding of contempt of court by a Federal Court has been issued against the contractor within the immediately preceding two year period because of the contractor's failure to comply with any order of a federal court which orders the contractor to comply with an order of the National Labor Relations Board.

12. In accordance with Title VI of the Civil Rights Act of 1964 (the "Act"), the contractor certifies that they will comply with all requirements of the Act.

13. Bidder hereby certifies that he/she has reviewed the insurance coverage requirements specified in the Contract. Should he/she be awarded the contract for the work, bidder further certifies that he/she can meet all Contract requirements for insurance including insurance coverage of his/her subcontractors.

14. Bidder hereby lists the names of all persons interested in the forgoing bid as principals and are as follows:

    IMPORTANT NOTICE: If bidder or other interested person is a corporation, state legal name of corporation, also names of the president, secretary, treasurer, and manager thereof authorized to execute this bid; If a co-partnership, state true name of firm, names of all individual co-partners composing firm; if bidder or other interested person is an individual, state first and last names in full.

    _____

    _____

    _____

    _____

    _____

    _____

BID FORM
IFB16-1001520
(Continued)

15. Bidder has attached hereto and incorporated herein the complete and entire list of subcontractors to be employed by the undersigned in the performance of the work.

16. Bidder certifies under penalty of perjury under the laws of the State of California, that the statements within the foregoing Bid, including, without limitation, the questionnaire and statements provided for in Public Contract Code sections 10162, 10232 and 10285.1, are true and correct and that the Bidder has complied with the requirements of section 8103 of the Fair Employment and Housing Authority Regulations (Chapter 5, Title 2 of the California Code of Administrative Regulations). By my signature on this bid, I further certify, under penalty of perjury of the laws of the State of California and the United States of America, that the Non-collusion Affidavit required under Title 23, United States Code, section 112 and the State of California Public Contract Code section 7106, and Title 49 CFR, Part 29, "Debarment and Suspension" Certification, and the Title 49 CFR, Part 661, "Buy America" Certification, are true and correct.

This declaration executed in California, at (place) _____ on (date) _____

Business Type: (Check only one) ☐ Corporation ☐ Partnership ☐ Sole Proprietorship

Corporation organized under the laws of the State of: _____

Bid and Certification submitted by _____

Company Name

SIGN HERE _____

Signature of Authorized Representative of Bidder

_____

Print Name and Title

Note: If the bidder is a corporation, the legal name of the corporation shall be set forth above with the signature of the officer authorized to sign contracts on behalf of the corporation. If bidder is a co-partnership, the true name of the firm shall be set forth above together with the signature of the partner or partners authorized to sign contracts in behalf of the co-partnership; and if a bidder is an individual, his signature shall be placed above. If signature is by an agent, other than an officer of a corporation or member of a partnership, a Power of Attorney must be on file with SANBAG prior to opening of the bids or submitted with the bid; otherwise, the bid will be disregarded as irregular and found non-responsive.

BIDDERS BOND

SAN BERNARDINO TRANSIT CENTER
EMERGENCY GENERATOR & LANDSCAPE MODIFICATIONS PROJECT
IFB16-1001520

KNOW ALL MEN BY THESE PRESENTS:

That, _____(bidder's name) as principal and bidder (hereafter "Principal"), and _____ (surety company) (hereafter "Surety"), as surety for this bond, provide this forfeiture bond to SANBAG (hereafter "Owner") as beneficiary. Surety shall be an admitted surety insurer as defined in section 995.660 of the California Code of Civil Procedure.

Principal and Surety are firmly bound unto the Owner in the penal sum of ten percent (10%) of the total aggregate amount of the bid of the above contractor, submitted by said Principal to Owner for the work described below (hereafter "Penal Sum"), for the payment of which sum in lawful money of the United States, well and truly to be made, Principal and Surety bind ourselves, our heirs, executors, administrators, and successors, and assigns, jointly and severably, firmly by these presents. The Penal Sum shall be forfeited in its entirety to Owner, without consideration as to the amount of actual damages incurred by Owner, if Principal fails to enter into the Contract for the work described in this "Invitation for Bids" and fails to furnish the necessary performance and payment bonds and insurance. A Bid Bond has been submitted by Principal to owner and delivered to and received by SANBAG located at: 1170 W. 3rd Street, 2nd Floor, San Bernardino, CA 92410-1715.

IN WITNESS WHEREOF, we hereunto set our hands and seals on this day of _____.

Principal: _____

Dated _____ _____

Signature of Principal

_____

Surety

_____

Address

_____

City, State, and Zip

Dated _____ _____

Signature of Surety

NOTE: Signatures of those executing for Surety must be properly acknowledged. This form may be reproduced for transmittal to the Surety for execution and attached to the front of the original Bid Bond Form.

CERTIFICATE OF ACKNOWLEDGMENT
BIDDERS BOND

CONTRACT NO 16-1001520

State of California
County of _____

On this ____ day of _____ in the year 20_____ before me, _____personally appeared, personally known to me (or proved to me on the basis of satisfactory evidence) to be the person(s) whose name(s) is/are subscribed to this instrument as the attorney-in-fact of, and acknowledged to me that he/she/they subscribed the name of the said company thereto as surety, and his/her own name as attorney-in-fact.

WITNESS my hand and official seal.

Signature

Seal

NONCOLLUSION AFFIDAVIT

Title 23 United States Code section 112 and Public Contract Code section 7106

In accordance with Title 23 United States Code section 112 and Public Contract Code section 7106, the bidder declares that the bid is not made in the interest of, or on behalf of, any undisclosed person, partnership, company, association, organization, or corporation; that the bid is genuine and not collusive or sham; that the bidder has not directly or indirectly induced or solicited any other bidder to put in a false or sham bid, and has not directly or indirectly colluded, conspired, connived, or agreed with any bidder or anyone else to put in a sham bid, or that anyone shall refrain from bidding; that the bidder has not in any manner, directly or indirectly, sought by agreement, communication, or conference with anyone to fix the bid price of the bidder or any other bidder, or to fix any overhead, profit, or cost element of the bid price, or of that of any other bidder, or to secure any advantage against the public body awarding the contract of anyone interested in the contract; that all statements contained in the bid are true; and, further, that the bidder has not, directly or indirectly, submitted his or her bid price or any breakdown thereof, or the contents thereof, or divulged information or data relative thereto, or paid, and will not pay, any fee to any corporation, partnership, company association, organization, bid depository, or to any member or agent thereof to effectuate a collusive or sham bid.

I, declare under the penalty of perjury under the laws of the State of California that the forgoing is true and correct.

Date: _____ _____

Principal Officer of:

_____

_____

_____

(Name and Address of Contractor)

LISTING OF SUBCONTRACTORS

In compliance with the provisions of section 4100 et seq. of the Public Contract Code of the State of California, and any amendments thereof, the undersigned has set forth below the name, the address, and a description of the work for each subcontractor who will perform work or labor or render services to the undersigned in or about the construction of the work or improvement to be performed in an amount over $10,000 or 0.5% of the total contract bid price, whichever is greater.

Section A - This section is to be completed and submitted with your bid

Subcontractor:

_____
Name

_____
Address

_____
City, State & Zip Code

Description of work to be performed:

Subcontractor:

_____
Name

_____
Address

_____
City, State & Zip Code

Section B -This section to be completed and submitted within 24 hours of the bid due date to procurement@sanbag.ca.gov

Subcontractor:

_____
Bid item number, description and percentage of bid item

_____
Bid item number, and description of work

_____ % of work

Subcontractor:

_____
Bid item number, description and percentage of bid item (cont'd)

_____
Bid item number, and description of work

_____ % of work

By:

_____
Bidder's Signature

This form may be reproduced and attached behind this page to list additional subcontractors.

NOTICE OF REQUIREMENTS FOR AFFIRMATIVE ACTION TO ENSURE EQUAL EMPLOYMENT OPPORTUNITY FOR CONSTRUCTION (EXECUTIVE ORDER 11246 AND 41 CFR PART 60-4)

As prescribed in 22.810(b), insert the following provision: Notice of Requirement for Affirmative Action To Ensure Equal Employment Opportunity for Construction (Feb. 1999), - (A) The bidders attention is called to the Equal Opportunity clause and the Affirmative Action Compliance Requirements for Construction clause of this solicitation. (B) The goals for minority and female participation, expressed in percentage terms for the contractor's aggregate workforce in each trade on all construction work in the covered area, are as follows:

Goals for minority participation for each trade is	**19.0%**
Goals for female participation for each trade each trade is	**6.9%**

These goals are applicable to all of the contractor's construction work performed in the covered area. If the contractor performs construction work in a geographical area located outside of the covered area, the contractor shall apply the goals established for the geographical area where the work is actually performed. Goals are published periodically in the Federal Register in notice form, and these notices may be obtained from any Office of Federal Contract Compliance Programs office. (C) The bidder's compliance with Executive Order 11246, as amended, and the regulations in 41 CFR 60-4 shall be based on (1) its implementation of the Equal Opportunity clause, (2) specific affirmative action obligations required by the clause entitled Affirmative Action Compliance Requirements for Construction, and (3) its efforts to meet the goals. The hours of minority and female employment and training must be substantially uniform throughout the length of the contract, and in each trade. The contractor shall make a good faith effort to employ minorities and women evenly on each of its projects. The transfer of minority or female employees or trainees from contractor to contractor, or from project to project, for the sole purpose of meeting the contractor's goals shall be a violation of the contract, Executive Order 11246, as amended, and the regulations in 41 CFR 60-4. Compliance with the goals will be measured against the total work hours performed. (D) The contractor shall provide written notification to the Deputy Assistant Secretary for Federal Contract Compliance, U.S. Department of Labor, within 10 working days following award of any construction subcontract in excess of $10,000 at any tier for construction work under the contract resulting from this solicitation. The notification shall list the (1) Name, address, and telephone number of the subcontractor; (2) Employer's identification number of the subcontractor; (3) Estimated dollar amount of the subcontract; (4) Estimated starting and completion dates of the subcontract; and (5) Geographical area in which the subcontract is to be performed. (E) As used in this Notice, and in any contract resulting from this solicitation, the covered area is San Bernardino, California.

IFB16-1001520
BIDDERS CERTIFICATE OF COMPLIANCE REGARDING
WORKERS COMPENSATION INSURANCE

In conformance with current statutory requirements of section 1860 et. seq., of the Labor Code of the State of California, the undersigned confirms the following certification:

"As the bidder, I am aware of the provisions of section 3700 of the Labor Code which requires every employer to be insured against liability for workers compensation or to undertake self-insurance in accordance with the provisions of that code, and I will comply with such provisions before commencing the performance of the work of this contract."

Bidder Name: _____

Signature: _____

Name and Title: _____

Date: _____

IFB16-1001520
NON-LOBBYING CERTIFICATION FOR FEDERAL-AID CONTRACTS

I, _____(Firm Name) as the bidder certifies, by signing and submitting this bid, to the best of his or her knowledge and belief, that:

(1) No Federal appropriated funds have been paid or will be paid, by or on behalf of the undersigned, to any person for influencing or attempting to influence an officer or employee of any Federal agency, a Member of Congress, an officer or employee of Congress, or an employee of a Member of Congress in connection with the awarding of any Federal contract, the making of any Federal grant, the making of any Federal loan, the entering into of any cooperative agreement, and the extension, continuation, renewal, amendment, or modification of any Federal contract, grant, loan, or cooperative agreement.

(2) If any funds, other than Federal appropriated funds, have been paid or will be paid to any person for influencing or attempting to influence an officer or employee of any Federal agency, a Member of Congress, an officer or employee of Congress, or an employee of a Member of Congress in connection with this Federal contract, grant, loan, or cooperative agreement, the undersigned shall complete and submit Standard Form-LLL, "Disclosure of Lobbying Activities," in conformance with its instructions.

This certification is a material representation of fact upon which reliance was placed when this transaction was made or entered into. Submission of this certification is a prerequisite for making or entering into this transaction imposed by section 1352, Title 31, U.S. Code. Any person who fails to file the required certification shall be subject to a civil penalty of not less than $10,000 and not more than $100,000 for each such failure.

The prospective participant also agrees by submitting his or her bid that he or she shall require that the language of this certification be included in all lower tier subcontracts, which exceed $100,000 and that all such sub-recipients shall certify and disclose accordingly.

Executed this _____ day of _____, 201__

By: _____
Signature of bidder's authorized official

INSTRUCTIONS FOR COMPLETION OF SF-LLL, DISCLOSURE OF LOBBYING ACTIVITIES

This disclosure form shall be completed by the reporting entity, whether subawardee or prime Federal recipient, at the initiation or receipt of a covered Federal action or a material change to previous filing pursuant to Title 31 U.S.C. section 1352. The filing of a form is required for such payment or agreement to make payment to any lobbying entity for influencing or attempting to influence an officer or employee of any agency, a Member of Congress, an officer or employee of Congress, or an employee of a Member of Congress in connection with a covered Federal action. Use the SF-LLL-A Continuation Sheet for additional information if the space on the form is inadequate. Complete all items that apply for both the initial filing and material change report. Refer to the implementing guidance published by the Office of Management and Budget for additional information.

1. Identify the type of covered Federal action for which lobbying activity is and/or has been secured to influence the outcome of a covered Federal action.
2. Identify the status of the covered Federal action.
3. Identify the appropriate classification of this report. If this is a follow-up report caused by a material change to the information previously reported, enter the year and quarter in which the change occurred. Enter the date of the last previously submitted report by this reporting entity for this covered Federal action.
4. Enter the full name, address, city, state and zip code of the reporting entity. Include Congressional District if known. Check the appropriate classification of the reporting entity that designates if it is or expects to be a prime or subaward recipient. Identify the tier of the subawardee, e.g., the first subawardee of the prime is the first tier. Subawards include but are not limited to subcontracts, subgrants and contract awards under grants.
5. If the organization filing the report in item 4 checks ”Subawardee” then enter the full name, address, city, state and zip code of the prime Federal recipient. Include Congressional District, if known.
6. Enter the name of the Federal agency making the award or loan commitment. Include at least one organization level below agency name, if known. For example, Department of Transportation, United States Coast Guard.
7. Enter the Federal program name or description for the covered Federal action in item 1. If known, enter the full Catalog of Federal Domestic Assistance (CFDA) number for grants, cooperative agreements, loans and loan commitments.
8. Enter the most appropriate Federal identifying number available for the Federal action identified in item 1 (e.g., Request for Proposal (RFP) number, Invitation for Bid (IFB) number, grant announcement number, the contract, grant, or loan award number, the application/proposal control number assigned by the Federal agency. Include prefixes, e.g. RFP-DE-90-001.
9. For a covered Federal action where there has been an award or loan commitment by the Federal agency, enter the Federal amount of the award/loan commitments for the prime entity identified in item 4 or 5.
10. (a) Enter the full name, address, city, state and zip code of the lobbying entity engaged by the reporting entity identified in item 4 to influence the covered Federal action. (b) Enter the full names of the individual(s) performing services and include full address if different from 10

(a). Enter last name, first name and middle initial (MI).

11. Enter the amount of compensation paid or reasonably expected to be paid by the reporting entity (item 4) to the lobbying entity (item 10). Indicate whether the payment has been made (actual) or will be made (planned). Check all boxes that apply. If this is a material change report, enter the cumulative amount of payment made or planned to be made.
12. Check the appropriate box (es). Check all boxes that apply. If payment is made through an in-kind contribution, specify the nature and value of the in-kind payment.
13. Check the appropriate box(es). Check all boxes that apply. If other, specify nature.
14. Provide a specific and detailed description of the services that the lobbyist has performed or will be expected to perform and the date(s) of any services rendered. Include all preparatory and related activity, not just time spent in actual contact with Federal official(s). Identify the Federal officer(s) or employee(s) contacted or the officer(s) employee(s) or Member(s) of . …..Congress that were contacted.
15. Check whether or not a SF-LLL-A Continuation Sheet(s) is attached.
16. The certifying official shall sign and date the form print his/her name title and telephone number.

Public reporting burden for this collection of information is estimated to average 30 minutes per response, including time for reviewing instruction, searching existing data sources, gathering and maintaining the data needed, and completing and reviewing the collection of information. Send comments regarding the burden estimate or any other aspect of this collection of information, including suggestions for reducing this burden, to the Office of Management and Budget, Paperwork Reduction Project (0348-0046), Washington, D.C. 20503

IFB16-1001520
DISCLOSURE OF LOBBYING ACTIVITIES

Complete this form to disclose lobbying activities pursuant to 31 U.S.C. 1352
(See reverse for public burden disclosure.)

1. Type of Federal Action: ☐ a. contract b. grant c. cooperative agreement d. loan e. loan guarantee f. loan insurance	**2. Status of Federal Action:** ☐ a. bid/offer application b. initial award c. post-award	**3. Report Type:** ☐ a. initial filing b. material changes For Material Change Only: year _____ quarter _____ date of last report _____
4. Name and Address of Reporting Entity: ☐ Prime ☐ Subawardee Tier _____, *if known*: Congressional District, *if known*:	**5. If Reporting Entity in No. 4 is Subawardee, Enter Name and Address of Prime:** Congressional District, *if known*:	
6. Federal Department/Agency:	**7. Federal Program Name/Description:** CFDA number, *if applicable*: _____	
8. Federal Action Number, *if known*:	**9. Award Amount, *if known*:** $	
10. a. Name and Address of Lobbying Entity (if individual, last name, first name, MI)	**b. Individuals Performing Services (including address if different from No 10a) (last name, first name, MI):**	
(attach Continuation Sheet(s) SF - LLL - A if necessary)		
11. Amount of Payment (check all that apply): $_____ ☐ actual ☐ planned	**13. Type of Payment (check all that apply):** ☐ a. retainer ☐ b. one-time fee ☐ c. commission ☐ d. contingent fee ☐ e. deferred ☐ f. other specify: _____	
12. Forum of Payment (check all that apply): ☐ a. cash ☐ b. in-kind; specify nature: _____ value: _____		
14. Brief Description of Services Performed or to be Performed and Date(s) of Service, including officer(s), employee(s) or Member(s) contracted for Payment indicated in Item, 11: (attach Continuation Sheet(s) SF-LLL-A if necessary)		
16. Information requested through this form is authorized by Code 31 U.S.C. section 1352. This disclosure of lobbying activities is a material representation of fact upon which reliance was placed by the tier above when this transaction was made or entered into. This disclosure is required pursuant to 31 U.S.C. 1352. This information will be reported to the Congress semi-annually and will be available for public inspection. Any person who fails to file the required disclosure shall be subject to a civil penalty of not less than $10,000.00 and not more than $100,000.00 for each such failure.	**Signature:** _____ **Print name:** _____ **Title:** _____ **Telephone No:** _____ **Date:** ___	
Federal Use Only		**Authorized for Local eproduction**

DISCLOSURE OF LOBBYING ACTIVITIES (Continuation Sheet)
Reporting Entity: _____ Page _____ of __
_____

CALIFORNIA PUBLIC CONTRACT CODE SECTION 10162 QUESTIONNAIRE

In accordance with California Public Contract Code section 10162, the bidder shall complete, under penalty of perjury, the following questionnaire.

Has the bidder, any officer of the bidder, or any employee of the bidder who has proprietary interest in the bidder, ever been disqualified, removed, or otherwise prevented from bidding on, or completing a federal, state, or local government project because of a violation of law or safety regulation?

❑Yes ❑No

If the answer is yes, explain the circumstances in the space below.

CALIFORNIA PUBLIC CONTRACT CODE SECTION 10285.1 STATEMENT

In accordance with California Public Contract Code section 10285.1, the bidder hereby declares under penalty of perjury that neither the bidder, nor any subcontractor listed by the bidder for this bid **has ❑, or has not ❑** been convicted by a court of competent jurisdiction within the preceding three (3) years of any offenses referred to in the section, including any charge of fraud, bribery, collusion, conspiracy, or any other act in violation of any state or Federal antitrust law in connection with the bidding upon, award of, or performance of any public works contract, as defined in Public Contract Code section 1101, with any public entity, as defined in Public Contract Code section 1100, including the Regents of the University of California or Trustees of the California State University. The term "bidder" is understood to include any partner, member, officer, director, responsible managing officer, or responsible managing employees thereof, as referred to in section 10285.1.

NOTE: The bidder must place a check mark after "has" or "has not" in one of the blank spaces provided.

INSTRUCTIONS FOR CERTIFICATION REGARDING DEBARMENT, SUSPENSION

TITLE 49, CODE OF FEDERAL REGULATIONS, PART 29.20

Each bidder shall complete the "Certification of Debarment, Suspension and other Responsibility Matters" included in this IFB for itself and its principals, and submit the certification with its bid. Failure to submit the certification may result in the rejection of the bid.

If a bidder Plans (Attachment "D") to use subcontractors on this project, the bidder shall have all subcontractors with contracts in excess of $25,000 complete the certification entitled "Certification Regarding Debarment For Lower Tier Covered Transactions" for and **submit that certification within ten (10) working days after Notice of Award.**

By signing and submitting this bid, the prospective bidder is providing the certification set out below. The inability of the bidder to provide the certification required below will not necessarily result in denial of participation in this covered transaction. The bidder shall submit an explanation of why it cannot provide the certification set out below. The certification or explanation will be considered in connection with SANBAG's determination whether to enter into this transaction. However, **failure of the bidder to furnish a certification or an explanation shall disqualify such person from participation in this transaction.**

The certification in this clause is a material representation of fact upon which reliance was placed when SANBAG determined to enter into this transaction. If it is later determined that the bidder knowingly rendered an erroneous certification, in addition to other remedies available to SANBAG, SANBAG may terminate this transaction for cause or default.

The bidder shall provide immediate written notice to the department or agency to which this bid is submitted if at any time the prospective primary participant learns that its certification was erroneous when submitted or has become erroneous by reason of changed circumstances.

The terms covered transaction, debarred, suspended, ineligible, lower tier covered transaction, participant, person, primary covered transaction, principal, proposal, and voluntarily excluded, as used in this clause, have the meanings set out in the Definitions and Coverage sections of the rules implementing Executive Order 12549. You may contact SANBAG for assistance in obtaining a copy of those regulations.

The prospective primary participant agrees by submitting this bid that, should the proposed covered transaction be entered into, it shall not knowingly enter into any lower tier covered transaction with a person who is proposed for debarment under 48 CFR part 9, subpart 9.4, debarred, suspended, declared ineligible, or voluntarily excluded from participation in this covered transaction, unless authorized by the department or agency entering into this transaction.

The bidder further agrees by submitting this bid that it will include the clause titled

"Certification Regarding Debarment, Suspension, Ineligibility and Voluntary Exclusion-Lower Tier Covered Transaction," provided by SANBAG, without modification, in all lower tier covered transactions and in all solicitations for lower tier covered transactions.

A participant in a covered transaction may rely upon a certification of a prospective participant in a lower tier covered transaction that it is not proposed for debarment under 48 CFR part 9, subpart 9.4, debarred, suspended, ineligible, or voluntarily excluded from the covered transaction, unless it knows that the certification is erroneous. A bidder may decide the method and frequency by which it determines the eligibility of its principals. Each participant may, but is not required to, check the List of Parties Excluded from Federal Procurement and Nonprocurement Programs.

Nothing contained in the foregoing shall be construed to require establishment of a system of records in order to render in good faith the certification required by this clause. The knowledge and information of a participant is not required to exceed that which is normally possessed by a prudent person in the ordinary course of business dealings.

Except for transactions authorized under these instructions, if a bidder knowingly enters into a lower tier covered transaction with a person who is proposed for debarment under 48 CFR part 29, subpart 9.4, suspended, debarred, ineligible, or voluntarily excluded from participation in this transaction, in addition to other remedies available to the SANBAG, SANBAG may terminate this transaction for cause or default.

Instructions for Certification Regarding Debarment, Suspension – Lower Tier Covered Transactions

Applicable to all subcontracts, purchase orders and other lower tier transactions of $25,000 or more - 49 CFR 29).

By signing and submitting this bid, the subcontractor is providing the certification set out below.

The certification in this clause is a material representation of fact upon which reliance was placed when this transaction was entered into. If it is later determined that the subcontractor knowingly rendered an erroneous certification, in addition to other remedies available to the SANBAG, SANBAG may pursue available remedies, including suspension and/or debarment.

The subcontractor shall provide immediate written notice to the person to which this bid is submitted if at any time the subcontractor that its certification was erroneous by reason of changed circumstances.

The terms "covered transaction," "debarred," "suspended," "ineligible," "primary covered transaction," "participant," "person," "principal," "proposal or bid," and "voluntarily excluded," as used in this clause, have the meanings set out in the Definitions and Coverage sections of rules implementing Executive Order 12549. You may contact the person to which this bid is submitted for assistance in obtaining a copy of those regulations.

The subcontractor agrees by submitting this bid that, should the proposed covered transaction be entered into, it shall not knowingly enter into any lower tier covered transaction with a person who is debarred, suspended, declared ineligible, or voluntarily excluded from participation in this covered transaction, unless authorized by the department or agency with which this transaction originated.

The subcontractor further agrees by submitting this bid that it will include this clause titled "Certification Regarding Debarment, Suspension, Ineligibility and Voluntary Exclusion-Lower Tier Covered Transaction," without modification, in all lower tier covered transactions and in all solicitations for lower tier covered transactions.

A participant in a covered transaction may rely upon a certification of a prospective participant in a lower tier covered transaction that is not debarred, suspended, ineligible, or voluntarily excluded from the covered transaction, unless it knows that the certification is erroneous. A participant may decide the method and frequency by which it determines the eligibility of its principals. Each participant may, but is not required to, check the non-procurement List.

Nothing contained in the foregoing shall be construed to require establishment of a system of records in order to render in good faith the certification required by this clause. The knowledge and information of participant is not required to exceed that which is normally possessed by a prudent person in the ordinary course of business dealings.

Except for transactions authorized under these instructions, if a participant in a covered transaction knowingly enters into a lower tier covered transaction with a person who is suspended, debarred, ineligible, or voluntarily excluded from participation in this transaction, in addition to other remedies available to the Federal Government, the department or agency with which this transaction originated may pursue available remedies, including suspension and/or debarment.

IFB16-1001520
CERTIFICATION REGARDING DEBARMENT, SUSPENSION, AND OTHER RESPONSIBILITY MATTERS - PRIMARY COVERED TRANSACTIONS (PRIME)

The _____
Firm Name/Principal

Certifies to the best of its knowledge and belief, that it and its principals:

1. Are not presently debarred, suspended, proposed for debarment, declared ineligible or voluntarily excluded from covered transactions by any Federal department or agency.

2. Have not within a three-year period preceding this bid, been convicted of or had a civil judgment rendered against them for commission of fraud or criminal offense in connection with obtaining, attempting to obtain, or performing a public (federal, state or local) transaction or contract under a public transaction; violation of federal or state antitrust statutes or commission of embezzlement, theft, forgery, bribery, falsification or destruction of records, making false statements, or receiving stolen property;

3. Are not presently indicted for or otherwise criminally or civilly charged by a governmental entity (federal, state or local), with commission of any of the offenses enumerated in paragraph 2 herein; and

4. Have not within a three-year period preceding this bid had one or more public transaction (federal, state or local) terminated for cause or default.

If unable to certify to any of these statements in this certification, the primary participant (bidder) shall attach an explanation to this certification.

THE PRIMARY PARTICIPANT _____
Firm Name/Principal

Certifies or affirms the truthfulness and accuracy of the content of the statements submitted on or with this certification and understands that the provisions of 31 U.S.C. Sections 3801 et seq., are applicable.

Signature and Title of Authorized Official: _____

IFB16-1001520
CERTIFICATION REGARDING DEBARMENT, SUSPENSION AND OTHER INELIGIBILITY AND VOLUNTARY EXCLUSION – LOWER TIER COVERED TRANSACTIONS- (SUBCONTRACTORS)

The _____
Firm Name/Principal

Certifies by submission of this bid, that neither it nor its principals are presently debarred, suspended, proposed for debarment, declared ineligible or voluntarily excluded from participation in this transaction by any federal department or agency.

If unable to certify to any of the statements in this certification, such participant(s) shall attach an explanation to this bid.

THE LOWER TIER PARTICIPANT _____
Firm Name/Principal

Certifies or affirms the truthfulness and accuracy of the content of the statements submitted on or with this certification and understands that the provisions of 31 U.S.C. section 3801 et seq. are applicable.

Signature and Title of Authorized Official: _____

IFB16-1001520
BIDDER'S CERTIFICATION OF COMPLIANCE WITH BUY AMERICA REQUIREMENTS FOR STEEL, IRON AND MANUFACTURED PRODUCTS

Bidder agrees to comply with 49 U.S.C. Section 5323(j) and 49 C.F.R. Part 661 which provide that Federal funds may not be obligated unless steel, iron, and manufactured products used in FTA-funded projects are produced in the United States, unless a waiver has been granted by FTA or the project is subject to a general waiver. General waivers are listed in 49 C.F.R. Section 661.7, and include final assemble in the United States for 15 passenger vans and 15 passenger wagons produced by Chrysler Corporation, and microcomputer equipment and software. Separate requirements for rolling stock are set out at 49 U.S.C. Section 5323(j)(2)(c) and 49 C.F.R. Section 661.11.

Bidder hereby certifies that it will meet the requirements of 49 U.S.C. Section 5323(j) and the applicable regulations in 49 C.F.R. Part 661.

Signature and Title of Authorized Official: _____

IFB16-1001520

BIDDER'S CERTIFCATION OF COMPLIANCE WITH CLEAN AIR ACT AND

FEDERAL WATER POLLUTION CONTROL ACT

By submission of this bid, the bidder, Federal-aid construction contractor, or subcontractor, as appropriate, hereby certifies:

1. That any facility that is or will be utilized in the performance of this contract, unless such contract is exempt under the Clean Air Act, as amended (42 U.S.C. 1857 *et seq*., as amended by Pub.L. 91-604), and under the Federal Water Pollution Control Act, as amended (33 U.S.C. 1251 *et seq*., as amended by Pub.L. 92-500), Executive Order 11738, and regulations in implementation thereof (40 CFR 15) is not listed, on the date of contract award, on the U.S. Environmental Protection Agency (EPA) List of Violating Facilities pursuant to 40 CFR 15.20.

2. That the bidder agrees to comply and remain in compliance with all the requirements of section 114 of the Clean Air Act and section 308 of the Federal Water Pollution Control Act and all regulations and guidelines listed hereunder.

3. That the successful bidder shall promptly notify SANBAG of the receipt of any communication from the Director, Office of Federal Activities, EPA, indicating that a facility that is or will be utilized for the contract is under consideration to be listed on the EPA List of Violating Facilities.

4. That the successful bidder agrees to include or cause to be included these requirements in every nonexempt subcontract, and further agree to take such action as the government may direct as a means of enforcing such requirements.

Signature and Title of Authorized Official: _____

ATTACHMENT "A"
SANBAG CONTRACT

CONTRACT 16-1001520

BY AND BETWEEN

SANBAG

AND

_____

FOR

SAN BERNARDINO TRANSIT CENTER
EMERGENCY GENERATOR & LANDSCAPE MODIFICATIONS PROJECT

This contract, (referred to as "Contract"), is effective on the Effective Date as defined herein, by and between San Bernardino Associated Governments, acting in its capacity as San Bernardino County Transportation Commission, ("SANBAG"), whose address is 1170 W. 3rd Street, 2nd Floor, San Bernardino, California 92410-1715; and Firm Name (referred to hereafter as "CONTRACTOR") whose address is; _____. SANBAG and CONTRACTOR are each a "Party" and collectively the "Parties" herein.

RECITALS:

WHEREAS, SANBAG has determined that it requires construction of the San Bernardino Transit Center Emergency Generator & Landscape Modifications Project; and

WHEREAS, the work described herein cannot be performed by the employees of SANBAG; and

WHEREAS, CONTRACTOR has certified that they have the requisite personnel, experience, materials, and equipment and is fully capable and qualified to perform all work described herein identified herein; and

WHEREAS, CONTRACTOR desires to perform all work identified herein and to do so for the compensation and in accordance with the terms and conditions set forth in this contract.

NOW, THEREFORE, the Parties hereto agree as follows:

ARTICLE 1. CONTRACT DOCUMENTS

The complete Contract includes all of the following Contract Documents: the Contract terms and conditions; bid dated *enter Month, Day, Year*; and all Forms submitted with Bid; Performance and Payment Bonds; the Labor Surcharge and Equipment Rental Rates in effect on the date the work is accomplished; Project Plans (Attachment "D") and Specifications dated _____*Month, Day, Year*; Addenda No's. *_enter numbers _*; and all other Invitation for Bids 16-1001520 (IFB) requirements.

ARTICLE 2. BONDS

CONTRACTOR will furnish a Payment bond, in the form provided by SANBAG in the IFB, in an amount equal to one hundred percent (100%) of the contract price, and a faithful Performance bond in the form provided by SANBAG in the IFB, in an amount equal to one hundred percent (100%) of the contract price, said bonds, to be secured from a surety company satisfactory to SANBAG within ten (10) working days of the date of SANBAG's delivery to CONTRACTOR of the Notice of Award this Contract and prior to the commencement of work under this Contract. Bonds shall remain in full force and effect for a period of one (1) year following the date of filing of the Notice of Completion. Notwithstanding any other provision set forth in this Contract, performance by a Surety or Guarantor of any obligation of CONTRACTOR shall not relieve CONTRACTOR of any of its obligations thereunder.

ARTICLE 3. PROMPT PAYMENT/RETENTION

Pursuant to 49 CFR 26.29, CONTRACTOR is required to pay all subcontractors for satisfactory performance of their work no later than 7 days from the date CONTRACTOR receives payment from SANBAG. SANBAG shall hold retainage from CONTRACTOR of five percent (5%) from each invoice, and shall make prompt and regular incremental acceptances of portions, as determined by SANBAG of the contract work and pay retainage to the CONTRACTOR based on these acceptances. The CONTRACTOR or subcontractor(s) shall return all monies withheld in retention from all subcontractors within 30 days after receiving payment for work satisfactorily completed and accepted including incremental acceptances of portions of the contract work. Any delay or postponement of payment may take place only for good cause and with SANBAG's prior written approval. Any violation of these provisions shall subject CONTRACTOR to the penalties, sanctions, and other remedies specified in section 7108.5 of the California Business and Professions Code. This requirement shall not be construed to limit or impair any contractual, administrative or judicial remedies otherwise available to the CONTRACTOR or subcontractor in the event of: a dispute involving late payment or nonpayment by the CONTRACTOR; deficient subcontractor performance; and/or non-compliance by a subcontractor. This Article applies to DBE and non-DBE sub-contractors.

ARTICLE 4. COMPENSATION

4.1 SANBAG agrees to pay, and CONTRACTOR agrees to accept as full payment for the work outlined in the Contract documents, the sum of $ *enter dollar and cents amount* **DOLLARS AND CENTS** ( ), including without limitation any compensation due for unit price work which shall be calculated as the actual number of such units performed multiplied by the unit price, subject to additions and deductions, if any, in accordance with said documents. Progress payments shall not be made more often than once each thirty (30) days, nor shall the amount paid be in excess of ninety-five percent (95%) of either the pro-rata amount due for completed work as the progress payment date, or of the full payment amount of the Contract at time of completion. Payment requests shall not be deemed properly completed unless certified payrolls and any other mandatory submittals have been properly completed and submitted for each week worked during the time period covered by said payment request. Final payment to be made after acceptance of the Project. The Bid Schedule

presented on the next page is incorporated into this Contract by this reference.

4.2 Pursuant to California Public Contract Code section 22300, CONTRACTOR has the option to deposit securities with an Escrow Agent acceptable to SANBAG as a substitute for retention earnings required to be withheld. Alternatively, CONTRACTOR may submit a written request to SANBAG, who shall make payments of the retention amount directly to the Escrow Agent. The market value of the securities deposited at the time of substitution shall be at least equal to the cash amount required to be withheld as retention under this Contract. CONTRACTOR shall be responsible for paying all fees incurred by the Escrow Agent in administering the Escrow Account. Securities eligible for investment under this section shall include those listed in section 16430 of the Government Code.

INSERT ACCEPTED BID

SCHEDULE HERE

AFTER AWARD OF

PROJECT

ARTICLE 5. TAXES, DUTIES AND FEES

Except to the extent expressly provided elsewhere in this Contract, CONTRACTOR shall pay when due, and the compensation set forth in this Contract shall be inclusive of all: a) local, municipal, State, and federal sales and use taxes; b) excise taxes; c) taxes on personal property owned by CONTRACTOR; and d) all other governmental fees and taxes or charges of whatever nature applicable to CONTRACTOR to enable it to conduct business.

ARTICLE 6. AVAILABILITY OF FUNDS

The award and performance of this Contract is contingent on the availability of funds. If funds are not appropriated and/or allocated and available to SANBAG for the continuance of work performed by the CONTRACTOR, work directly or indirectly involved may be suspended or terminated by SANBAG at the end of the period for which funds are available. When SANBAG becomes aware that any portion of work, which will or may be affected by a shortage of funds, it will promptly notify CONTRACTOR. Nothing herein shall relieve SANBAG from its obligation to compensate CONTRACTOR for work already performed pursuant to this Contract. No penalty shall accrue to SANBAG in the event this provision is exercised.

ARTICLE 7. PERMITS AND LICENSES

CONTRACTOR agrees that he/she is currently the holder of a valid license as a CONTRACTOR in the State of California and that the license is the correct class of license for the work described in the project Plans (Attachment "D") and specifications. CONTRACTOR further agrees to maintain license through the entire duration of Contract without additional compensation from SANBAG. CONTRACTOR also agrees to keep current as required by the "Notice to Bidders and Special Provisions (Attachment "C")", all current permits required throughout the duration of the Project.

ARTICLE 8. DOCUMENTATION AND RIGHT TO AUDIT

CONTRACTOR shall provide SANBAG, the U.S. Department of Transportation (DOT), including but not limited to the Federal Transit or Federal Highway Administration, and the Comptroller General of the United States, or other authorized representatives or agents of SANBAG, access to CONTRACTOR's records which are directly related to this Contract for the purpose of inspection, auditing or copying. CONTRACTOR shall maintain all records related to this Contract in an organized way in the original format, electronic and hard copy, conducive to professional review and audit, for a period of three (3) years from the date of final payment by SANBAG, except in the event of litigation or settlement of claims arising out of this Contract in which case CONTRACTOR agrees to maintain records through the conclusion of all such litigation, appeals or claims related to this Contract. CONTRACTOR further agrees to maintain separate records for costs of work performed by change order. CONTRACTOR shall allow SANBAG, Omnitrans, Caltrans, FHWA or FTA, or its representatives of agents to reproduce any materials as reasonably necessary.

ARTICLE 9. SCHEDULE

CONTRACTOR agrees to complete the work within the time period as stipulated in the Special Provisions (Attachment "C") attached herein. CONTRACTOR shall incur no costs and shall not perform or furnish any work, services or equipment under this Contract, unless and until SANBAG has issued a written Notice to Proceed (NTP).

ARTICLE 10. NONDISCRIMINATION/ EQUAL EMPLOYMENT OPPORTUNITY

10.1 CONTRACTOR agrees to comply with the Equal Employment Opportunity (EEO) regulations for federally assisted programs of the Department of transportation (DOT), Title 49 CFR Part 21 as they may be amended from time to time, which are herein incorporated by this reference and made part of this Contract. The following minimum specific requirement EEO regulations:

10.1.1 CONTRACTOR will work with SANBAG and the Federal Government in carrying out EEO obligations and in their review of his/her activities under the Contract.

10.2.1 CONTRACTOR will accept as his operating policy the following statement: "It is the policy of this company to assure that applicants are employed, and that employees are treated during employment, without regard to their race, religion, sex, color, national origin, age or disability. Such action shall include: employment, upgrading, demotion, or transfer; recruitment or recruitment advertising; layoff or termination; rates of pay or other forms of compensation; and selection for training, including apprenticeship, pre-apprenticeship, and/or on-the-job training."

10.2 EEO Officer: CONTRACTOR will designate and submit to SANBAG in writing the EEO Officer who will have the responsibility for and must be capable of effectively administering and promoting an active CONTRACTOR program of EEO and who must be assigned adequate SANBAG and responsibility to do so.

10.3 Dissemination of Policy: All employees of the CONTRACTOR who are authorized to hire, supervise, promote, and discharge employees, or who recommend such action, or who are substantially involved in such action, will be made fully cognizant of, and will implement, the CONTRACTOR's EEO policy and contractual responsibilities to provide EEO in each grade and classification of employment. To ensure that the above agreement will be met, the following actions will be taken as a minimum:

10.3.1 Periodic meetings of supervisory and personnel office employees will be conducted before the start of work and then not less often than once every six months, at which time the CONTRACTOR's EEO policy and its implementation will be reviewed and explained. The meetings will be conducted by the EEO Officer.

10.3.2 All new supervisory or personnel office employees will be given a thorough indoctrination by the EEO Officer, covering all major aspects of the CONTRACTOR's EEO obligations within thirty days following their reporting for duty with the CONTRACTOR.

10.3.3 All personnel who are engaged in direct recruitment for the project will be instructed by the EEO Officer in the CONTRACTOR's procedures for locating and hiring minority group employees.

10.3.4 Notices and posters setting forth the CONTRACTOR's EEO policy will be placed in areas readily accessible to employees, applicants for employment and potential employees.

10.3.5 CONTRACTOR's EEO policy and the procedures to implement such policy will be brought to the attention of employees by means of meetings, employee handbooks, or other appropriate means.

10.4 Recruitment: When advertising for employees, CONTRACTOR will include in all advertisements for employees the notation: "An Equal Opportunity Employer." All such advertisements will be placed in publications having a large circulation among minority groups in the area from which the project work force would normally be derived.

10.4.1 CONTRACTOR will, unless precluded by a valid bargaining agreement, conduct systematic and direct recruitment through public and private employee referral sources likely to yield qualified minority group applicants. To meet this requirement, CONTRACTOR will identify sources of potential minority group employees, and establish with such identified sources procedures whereby minority group applicants may be referred to CONTRACTOR for employment consideration.

10.4.2 In the event CONTRACTOR has a valid bargaining agreement providing for exclusive hiring hall referrals, he is expected to observe the provisions of that agreement to the extent that the system permits CONTRACTOR's compliance with EEO contract provisions. (The DOL has held that where implementation of such agreements has the effect of discriminating against minorities or women, or obligates the CONTRACTOR to do the same, such implementation violates Executive Order 11246, as amended.)

10.4.3 CONTRACTOR will encourage his present employees to refer minority group applicants for employment. Information and procedures with regard to referring minority group applicants will be discussed with employees.

10.5 Personnel Actions**:** Wages, working conditions, and employee benefits shall be established and administered, and personnel actions of every type, including hiring, upgrading, promotion, transfer, demotion, layoff, and termination, shall be taken without regard to race, color, religion, sex, national origin, age or disability. The following procedures shall be followed:

10.5.1 CONTRACTOR will conduct periodic inspections of project sites to insure that working conditions and employee facilities do not indicate discriminatory treatment of project site personnel.

10.5.2 CONTRACTOR will periodically evaluate the spread of wages paid within each classification to determine any evidence of discriminatory wage practices.

10.5.3 CONTRACTOR will periodically review-selected personnel actions in depth to determine whether there is evidence of discrimination. Where evidence is found, the CONTRACTOR will promptly take corrective action. If the review indicates that the discrimination may extend beyond the actions reviewed, such corrective action shall include all affected persons.

10.5.4 CONTRACTOR will promptly investigate all complaints of alleged discrimination made to the CONTRACTOR in connection with his obligations under this Contract, will attempt to resolve such complaints, and will take appropriate corrective action

within a reasonable time. If the investigation indicates that the discrimination may affect persons other than the complainant, such corrective action shall include such other persons. Upon completion of each investigation, the CONTRACTOR will inform every complainant of all of his avenues of appeal.

10.6 Training and Promotion: CONTRACTOR will assist in locating, qualifying, and increasing the skills of minority group and women employees, and applicants for employment.

10.6.1 Consistent with CONTRACTOR's work force requirements and as permissible under Federal and State regulations, the CONTRACTOR shall make full use of training programs, i.e., apprenticeship, and on-the-job training programs for the geographical area of contract performance. Where feasible, 25 percent of apprentices or trainees in each occupation shall be in their first year of apprenticeship or training. In the event a special provision for training is provided under this contract, this subparagraph will be superseded as indicated in the special provision.

10.6.2 CONTRACTOR will advise employees and applicants for employment of available training programs and entrance requirements for each.

10.6.3 CONTRACTOR will periodically review the training and promotion potential of minority group and women employees and will encourage eligible employees to apply for such training and promotion.

10.7 Unions: If CONTRACTOR relies in whole or in part upon unions as a source of employees, CONTRACTOR will use his/her best efforts to obtain the cooperation of such unions to increase opportunities for minority groups and women within the unions, and to effect referrals by such unions of minority and female employees. Actions by CONTRACTOR either directly or through a CONTRACTOR's association acting, as agent will include the procedures set forth below:

10.7.1 CONTRACTOR will use best efforts to develop, in cooperation with the unions, joint training programs aimed toward qualifying more minority group members and women for membership in the unions and increasing the skills of minority group employees and women so that they may qualify for higher paying employment.

10.7.2 CONTRACTOR will use best efforts to incorporate an EEO clause into each union agreement to the end that such union will be contractually bound to refer applicants without regard to their race, color, religion, sex, national origin, age or disability.

10.7.3 CONTRACTOR is to obtain information as to the referral practices and policies of the labor union except that to the extent such information is within the exclusive possession of the labor union and such labor union refuses to furnish such information to CONTRACTOR, CONTRACTOR shall so certify to SANBAG and shall set forth what efforts have been made to obtain such information.

10.7.4 In the event the union is unable to provide CONTRACTOR with a reasonable flow of minority and women referrals within the time limit set forth in the collective bargaining agreement, CONTRACTOR will, through independent recruitment efforts, fill the employment vacancies without regard to race, color, religion, sex, national origin, age or disability; making full efforts to obtain qualified and/or

qualifiable minority group persons and women. (The DOL has held that it shall be no excuse that the union with which CONTRACTOR has a collective bargaining agreement providing for exclusive referral failed to refer minority employees.) In the event the union referral practice prevents CONTRACTOR from meeting the obligations pursuant to Executive Order 11246, as amended, and these Special Provisions (Attachment "C"), such CONTRACTOR shall immediately notify SANBAG.

10.8 CONTRACTOR shall not discriminate on the grounds of race, color, religion, sex, national origin, age or disability in the selection and retention of subcontractors, including procurement of materials and leases of equipment. CONTRACTOR shall notify all potential subcontractors and suppliers of his/her EEO obligations under this Contract. Disadvantaged business enterprises (DBE), as defined in 49 CFR Part 23 shall have equal opportunity to compete for and perform subcontracts, which the CONTRACTOR enters into pursuant to this contract. CONTRACTOR will use his best efforts to ensure subcontractor compliance with their EEO obligations.

10.9 Records and Reports: CONTRACTOR shall keep such records as necessary to document compliance with the EEO requirements. Such records shall be retained for a period of three (3) years following completion of the contract work and shall be available at reasonable times and places for inspection by authorized representatives of SANBAG. The records kept by the CONTRACTOR shall document the following: The number of minority and non-minority group members and women employed in each work classification on the project; the progress and efforts being made in cooperation with unions, when applicable, to increase employment opportunities for minorities and women; the progress and efforts being made in locating, hiring, training, qualifying, and upgrading minority and female employees.

10.9.1 CONTRACTOR will submit an annual report to SANBAG each July for the duration of the project, indicating the number of minority, women, and non-minority group employees currently engaged in each work classification required by the contract work. CONTRACTOR will be required to collect and report training data.

ARTICLE 11. CONFLICT OF INTEREST

CONTRACTOR agrees that it presently has no interest financial or otherwise and shall not acquire any interest, direct or indirect, which would conflict in any manner or degree with the performance of Work required under this Contract or to be contrary to the interests of SANBAG as to the Project. CONTRACTOR further agrees that in the performance of this Contract, no person having any such interest shall be employed. CONTRACTOR is obligated to fully disclose to SANBAG, in writing, conflict of interest issues as soon as they are known to CONTRACTOR. CONTRACTOR acknowledges that no member or delegate to, the Congress of the U.S. shall have any interest, direct or indirect, in this Contract or the benefits thereof.

ARTICLE 12. REPRESENTATIONS

All work supplied by CONTRACTOR under this Contract shall be supplied by personnel who are qualified, careful, skilled, experienced and competent in their respective trades or

professions. CONTRACTOR agrees that the Work performed shall conform to all drawings, Plans (Attachment "D") and specifications herein.

ARTICLE 13. PROPRIETARY RIGHTS/CONFIDENTIALITY

13.1 If, as part of this Contract, CONTRACTOR is required to produce materials, documents data, or information ("Products"), then CONTRACTOR, if requested by SANBAG, shall deliver to SANBAG the original of all such products which shall become the property of SANBAG.

13.2 All materials, documents, data or information obtained from SANBAG's data files or any SANBAG-owned medium furnished to CONTRACTOR in the performance of this Contract will at all times remain the property of SANBAG. Such data or information may not be used or copied for direct or indirect use outside of this Project by CONTRACTOR without the express written consent of SANBAG.

13.3 Except as reasonably necessary for the performance of Work, CONTRACTOR agrees that it, its employees, agents, and subcontractors will hold in confidence and not divulge to third parties without prior written consent of SANBAG, any information obtained by CONTRACTOR from or through SANBAG in connection with CONTRACTOR's performance of this Contract, unless (a) the information was known to CONTRACTOR prior to obtaining same from SANBAG pursuant to a prior contract; or (b) the information was obtained at the time of disclosure to CONTRACTOR, or thereafter becomes part of the public domain, but not as a result of the fault or an unauthorized disclosure of CONTRACTOR or its employees, agents, or subcontractors, or (c) the information was obtained by CONTRACTOR from a third party who did not receive the same, directly or indirectly, from SANBAG and who had, to CONTRACTOR's knowledge and belief, the right to disclose the same. Any materials and information referred to in this Article, which are produced by CONTRACTOR for SANBAG in the performance and completion of CONTRACTOR's Work under this Contract, until released in writing by SANBAG, except to the extent such materials and information become a part of public domain information through no fault of CONTRACTOR, or its employees or agents.

13.4 CONTRACTOR shall not use SANBAG's name or photographs of the Project in any professional publication, magazine, trade paper, newspaper, seminar or other medium without first receiving the express written consent of SANBAG.

13.5 All press releases relating to the Project or this Contract, including graphic display information to be published in newspapers, magazines, and other publications, are to be made only by SANBAG unless otherwise agreed to in writing by the Parties.

ARTICLE 14. TERMINATION

14.1 Termination for Convenience - SANBAG shall have the right at any time, with or without cause, to terminate further performance of Work by giving thirty (30) calendar days written notice to CONTRACTOR specifying the date of termination. On the date of such termination stated in said notice, CONTRACTOR shall promptly discontinue performance of Services and shall preserve work in progress and completed Work, pending SANBAG's instruction, and shall turn over such Work in accordance with SANBAG's instructions.

14.1.1 CONTRACTOR shall deliver to SANBAG, all deliverables prepared by

CONTRACTOR or its subcontractors or furnished to CONTRACTOR by SANBAG. Upon such delivery, CONTRACTOR may then invoice SANBAG for payment in accordance with the terms herein.

14.1.2 If CONTRACTOR has fully and completely performed all obligations under this Contract up to the date of termination, CONTRACTOR shall be entitled to receive from SANBAG as complete and full settlement for such termination a pro rata share of the contract cost and a pro rata share of any fixed fee, for such Services satisfactorily executed to the date of termination.

14.1.3 CONTRACTOR shall be entitled to receive the actual cost incurred by CONTRACTOR to return CONTRACTOR's field tools and equipment, if any, to it or its suppliers' premises, or to turn over work in progress in accordance with SANBAG's instructions plus the actual cost necessarily incurred in effecting the termination.

14.2 Termination for Cause - In the event CONTRACTOR shall file a petition in bankruptcy court, or shall make a general assignment for the benefit of its creditors, or if a petition in bankruptcy court shall be filed against CONTRACTOR or a receiver shall be appointed on account of its solvency, or if CONTRACTOR shall default in the performance of any express obligation to be performed by it under this Contract and shall fail to immediately correct (or if immediate correction is not possible, shall fail to commence and diligently continue action to correct) such default within ten (10) calendar days following written notice, SANBAG may, without prejudice to any other rights or remedies SANBAG may have, (a) hold in abeyance further payments to CONTRACTOR; (b) stop any Work of CONTRACTOR or its subcontractors related to such failure until such failure is remedied; and/or (c) terminate this Contract by written notice to CONTRACTOR specifying the date of termination. In the event of such termination by SANBAG, SANBAG may take possession of the deliverables and finish Services by whatever method SANBAG may deem expedient. A waiver by SANBAG of one default of CONTRACTOR shall not be considered to be a waiver of any subsequent default of CONTRACTOR, nor be deemed to waive, amend, or modify any term of this Contract.

14.2.1 CONTRACTOR shall deliver to SANBAG all finished and unfinished products prepared under this Contract by CONTRACTOR or its subcontractors or furnished to CONTRACTOR by SANBAG within ten (10) working days of said notice.

14.3 All claims for compensation or reimbursement of costs under any of the foregoing provisions shall be supported by documentation submitted to SANBAG, satisfactory in form and content to SANBAG and verified by SANBAG. In no event shall CONTRACTOR be entitled to any prospective profits or any damages because of such termination.

ARTICLE 15. STOP WORK ORDER

Upon failure of CONTRACTOR or its subcontractors to comply with any requirements of this Contract, SANBAG shall have the right to stop any or all Work affected by such failure until such failure is remedied or to terminate this Contract in accordance with the Termination provision herein.

ARTICLE 16. CLAIMS

SANBAG shall not be bound to any adjustments in the Contract amount or schedule unless expressly agreed to by SANBAG in writing. SANBAG shall not be liable to CONTRACTOR for any claim asserted by CONTRACTOR after final payment has been made under this Contract.

ARTICLE 17. INSURANCE

Prior to commencing the Work, at all times during the performance of the Work and for such additional periods as required herein, CONTRACTOR shall, at the CONTRACTOR's sole expense, procure and maintain insurance coverage with the following minimum requirements, and shall require all subcontractors of every tier performing any portion of the Work to procure and maintain such insurance as specified below:

17.1 Workers' Compensation/Employer's Liability Insurance – The policies must include the following:

- Coverage A. Statutory Benefits
- Coverage B. Employer's Liability
- Bodily Injury by accident - $1,000,000 per accident
- Bodily Injury by disease - $1,000,000 policy limit/$1,000,000 each employee
- There shall be no deductible or self-insured retention.

Such policies shall contain a waiver of subrogation in favor of the parties named as Indemnitees below. Such insurance shall be in strict accordance with the applicable workers' compensation laws in effect during performance of the Work by CONTRACTOR or any subcontractor of any tier. All subcontractors of any tier performing any portion of the Work for CONTRACTOR shall also obtain and maintain the same insurance coverage as specified in this subparagraph, with a waiver of subrogation in favor of CONTRACTOR and all parties named as Indemnitees in Article 18 below. SANBAG and CONTRACTOR must be certificate holders and must be provided at least 30 days advance notice of cancellation, unless the cancellation is for non-payment, then at least 10 days advance notice of cancellation shall be provided.

17.2 Commercial General Liability Insurance – The policy must include the following:

- $2,000,000 per occurrence limit for property damage or bodily injury;
- $1,000,000 per occurrence limit for personal injury and advertising injury;
- $6,000,000 of General Aggregate for property damage or bodily injury, and personal injury and advertising injury;
- $2,000,000 aggregate limit for products/completed operations coverage. CONTRACTOR shall maintain products and completed operations coverage for 10 years following the acceptance of Work or until all applicable statutes of limitation expire, whichever length of time is longer. Coverage is to be on an "occurrence" form. "Claims made" and "modified occurrence" forms are not acceptable.
- An endorsement stating that any aggregate limits apply on a "per project" and on a "per location" basis.

- The project name must be indicated under "Description of Operations/Locations."
- Contractor's errors and omissions coverage shall be provided.
- There shall be no deductible or self-insured retention.
- The policy shall be endorsed to provide: "This insurance will be primary and noncontributing with any other insurance of the additional insureds."

All commercial general liability insurance policies shall also include premises-operations (including explosion, collapse and underground coverage) and products-completed operations coverage; severability of interests (full separation of insureds); contractual liability coverage (including coverage to the maximum extent possible for the indemnifications contained in this Contract), broad form property damage coverage (including completed operations), and a duty to defend in addition to (without reducing) the limits of the policy(ies). All subcontractors of any tier performing any portion of the Work for Contractor shall also obtain and maintain the commercial general liability insurance coverage with limits not less than:

- Each occurrence limit: $1,000,000
- General aggregate limit: $2,000,000
- Personal injury and advertising limit: $1,000,000
- Products-completed operations aggregate limit: $2,000,000

All subcontractors' and sub-subcontractors' deductibles or self-insured retentions must be acceptable to SANBAG.

17.3 Umbrella/Excess CGL Insurance – The policy must include the following:

- $5,000,000 umbrella or excess liability for any project with a Contract value of $25,000,000 or less.
- Combined total for Commercial General Liability and Excess Liability limits of $25,000,000 will be required for projects with a Contract value in excess of $25,000,000.
- The umbrella or excess policy shall follow form over the CONTRACTOR's primary general liability coverage and shall provide a separate aggregate limit for products and completed operations coverage.
- The umbrella or excess policy shall not contain any restrictions or exclusions beyond what is contained in the primary policy.
- The umbrella or excess policy shall contain a clause stating that it takes effect (drops down) in the event the primary limits are impaired or exhausted.

17.4 Commercial Auto Insurance – The policy must include the following:

- Auto Liability limits of not less than $5,000,000 each accident.
- Combined Bodily Injury and Property Damage Liability insurance
- Coverage must include owned autos, hired or non-owned autos
- There shall be no deductible or self-insured retention.

The commercial automobile liability insurance shall be written on the most recent edition of ISO form CA 00 01 or equivalent acceptable to SANBAG and shall include, without limitation, contractual liability coverage and additional insured status for the Additional Insureds named in paragraph 17.7.2 below. Contractor waives all rights of subrogation against the Additional Insureds named below, for recovery of loss, injury and/or damages to the extent such loss, injury and/or damages are covered by the commercial automobile liability insurance required herein. All subcontractors of any tier performing any portion of the Work for Contractor shall also obtain and maintain the same insurance coverage as specified in this subparagraph, with the same waiver of subrogation in favor of all parties named as Indemnitees below, and Contractor.

17.5 Builder's Risk Insurance – CONTRACTOR shall purchase and maintain property insurance written on a builder's risk "Special Form Cause of Loss" or equivalent policy form in an amount equal to the not to exceed amount of the Contract, plus the cost of materials supplied or installed by others on a full replacement cost basis. The Builder's Risk policy shall include a soft cost endorsement that covers soft costs equal to twenty percent (20%) of the Contract's full value. Soft costs are defined as certain expenses, in addition to labor and materials, required to complete the Project that has been delayed due to unexpected physical damage and include, but are not limited to, the following: legal/accounting fees, design or other professional fees, financing costs, taxes, general administration, lease expenses, permit fees and insurance premiums. This insurance shall include the interests of the Additional Insureds as named below, CONTRACTOR and the subcontractors of every tier on the Project as insureds. The insurance shall cover without limitation, loss or damage to the Work arising from the perils covered under "Special Form Cause of Loss" form coverage including, without duplication of coverage for theft, fire, lightning, explosion, or hail, smoke, aircraft or vehicles, riot or civil commotion, vandalism, malicious mischief, collapse, earthquake, flood, windstorm, false-work, testing and delay of startup, temporary buildings, property in transit and while stored at a temporary location, debris removal including demolition occasioned by enforcement of any applicable legal requirements, and shall cover reasonable compensation for CONTRACTOR's services and expenses required as a result of such loss. During the Project construction period, CONTRACTOR and its subcontractors shall mutually waive all rights of recovery against each other and against the Additional Insureds identified below for damages caused by fire or other perils covered by the Builders Risk "Special Form Cause of Loss" insurance. All applicable policies of insurance covering the Work or the property of the CONTRACTOR or subcontractor shall be endorsed to provide a waiver of subrogation in favor of the Additional Insureds identified below, CONTRACTOR and all subcontractors of every tier. Further, CONTRACTOR hereby releases, and shall cause its subcontractors to release, the Indemnitees identified in Article 18 from any and all claims, losses and damages caused by fire or other perils covered by the Builders Risk "Special Form Cause of Loss" insurance. There shall be no deductible or self-insured retention exceeding $10,000.00 per loss, other than earthquake or flood which may have deductible or self-insured retentions not exceeding $50,000.00. The policy may have sublimits not less than the following:

Earthquake	$5,000,000.00
Flood	$1,000,000.00

17.6 Contractor's Pollution Liability Insurance - The policy must include the following:

- $1,000,000 per occurrence limit /$2,000,000 in the aggregate
- There shall be no deductible or self-insured retention in excess of $100,000.00

CONTRACTOR will require Contractor's Pollution Liability insurance coverage from those Subcontractors identified in the specifications and under such terms as required by SANBAG, and will require that CONTRACTOR and the Additional Insureds identified below are named as additional insureds under such coverage, and will further require that such coverage is primary coverage as provided below.

17.7 Railroad Protective Liability Insurance - ***Intentionally Omitted***

17.8 General Provisions

17.8.1 Qualification of Insurance Carriers - All policies shall be written by insurance carriers authorized and admitted to do business in the State of California with a current A. M. Best rating of A-VII or better.

17.8.2 Additional Insured Coverage - All policies, except those for Workers' Compensation insurance, shall name San Bernardino Associated Governments and all of its associated entities, including the San Bernardino County Transportation Commission, the San Bernardino County Transportation Authority, San Bernardino Congestion Management Agency and Service Authority for Freeway Emergencies, Omnitrans, the City of San Bernardino, and their officers, directors, members, employees, agents and volunteers, as additional insureds (the "Additional Insureds"). With respect to general liability arising out of or connected with work or operations performed by or on behalf of the CONTRACTOR under this Contract, coverage for such additional insureds shall not extend to liability:

(a) Arising from any defective or substandard condition of the roadway which existed at or prior to the time the CONTRACTOR commenced work, unless such condition has been changed by the Work or scope of the Work requires the CONTRACTOR to maintain or modify existing roadway facilities and the claim arises from the CONTRACTOR's failure to maintain or modify; or

(b) For claims occurring after the Work is completed and accepted unless these claims are directly related to alleged acts or omissions of the CONTRACTOR which occurred during the course of the Work; or

(c) To the extent prohibited by section 11580.04 of the Insurance Code.

17.8.3 Proof of Coverage – Evidence of insurance in a form acceptable to SANBAG, including the required additional insured endorsements, shall be provided within ten (10) business days after Notice of Award is given to CONTRACTOR. Prior to commencing any Work, CONTRACTOR shall furnish SANBAG with a certificate(s) of insurance, executed by a duly authorized representative of each insurer, showing compliance with the insurance requirements set forth in this Article. Certificates of Insurance, as evidence of required insurance, for all policies shall set forth deductible amounts applicable to each policy and list all exclusions which are added by endorsement to each policy, and shall also include the Contract Number on the face of the certificate. If requested in writing by

SANBAG, CONTRACTOR shall submit complete copies of all required insurance policies within ten (10) days of a written request by SANBAG.

17.8.4 Deductibles – Regardless of the allowance of exclusions or deductions by SANBAG, CONTRACTOR shall be responsible for any deductible amount and shall warrant that the coverage provided to SANBAG is consistent with the requirements of this section. CONTRACTOR will pay, and shall require its Subcontractors to pay, all deductibles, self-insured retentions, co-pay obligations, premiums and any other sums due under the insurance required above. All deductibles and self-insured retentions will be in amounts acceptable to SANBAG. CONTRACTOR will advise SANBAG in writing as to the amounts of any deductible or self-insured retention, or as to any increase in any insurance deductible or self-insured retention under any insurance required above. There will be no deductibles or self-insured retentions in excess of $100,000 per occurrence, loss or claim under the insurance required of CONTRACTOR or any subcontractors without the express written consent of SANBAG. SANBAG will have the right, but not the obligation, to pay any deductible or self-insured retention due under any insurance policy. If SANBAG pays any sums due under any insurance required above, SANBAG may withhold said sums from any amounts due to CONTRACTOR. The policies shall not provide that any deductible, self-insured retention or other payment required under the policy can be paid only by the named insured, and not by an additional insured.

17.8.5 CONTRACTOR's and Subcontractors' Insurance Will Be Primary - All policies required to be maintained by the CONTRACTOR or any subcontractor hereunder shall be endorsed to be primary coverage, and any coverage carried by any of the Additional Insureds named below, shall be excess and non-contributory. Further, none of CONTRACTOR's or subcontractors' pollution, automobile, general liability or other liability policies (primary or excess) will contain any cross-liability exclusion barring coverage for claims by an additional insured against a named insured.

17.8.6 Waiver of Subrogation Rights – To the fullest extent permitted by law, CONTRACTOR hereby waives all rights of recovery under subrogation against the Additional Insureds named below, and any other contractor, subcontractor or sub-subcontractor performing work or rendering services on behalf of SANBAG in connection with the planning, development and construction of the Project. To the fullest extent permitted by law, CONTRACTOR shall require similar written express waivers and insurance clauses from each of its subcontractors of every tier. CONTRACTOR shall require all of the policies and coverages required above to waive all rights of subrogation against the Additional Insureds and the Indemnitees named below. Such insurance and coverages provided shall not prohibit CONTRACTOR from waiving the right of subrogation prior to a loss or claim.

17.8.7 Cancellation – If any insurance company elects to cancel or non-renew coverage for any reason, CONTRACTOR will provide SANBAG thirty (30) days prior written notice of such cancellation or nonrenewal. If the policy is cancelled for nonpayment of premium, CONTRACTOR will provide SANBAG ten (10) days prior written notice.

17.8.8 Enforcement – SANBAG may take any steps as are necessary to assure CONTRACTOR's compliance with its insurance obligations as identified within this Article. Failure to continuously maintain insurance coverage as provided herein is a material breach of contract. In the event the CONTRACTOR fails to maintain any insurance coverage required, SANBAG may, but is not required to, maintain this coverage and charge the expense to the CONTRACTOR or terminate this Contract for cause. The insurance required or provided shall in no way limit or relieve the CONTRACTOR of the its duties and responsibilities under the Contract, including but not limited to obligation to indemnify, defend and hold harmless the Indemnitees named below. Insurance coverage in the minimum amounts set forth herein shall not be construed to relieve the CONTRACTOR for liability in excess of such coverage, nor shall it preclude SANBAG from taking other actions as is available to it under any other provision of the contract or law. Nothing contained herein shall relieve CONTRACTOR, or any subcontractor of any tier of their obligations to exercise due care in the performance of their duties in connection with the Work, and to complete the Work in strict compliance with the Contract Documents. For the duration of the Contract, until acceptance of the Project, the Contractor shall have full and complete charge and care of and shall bear all risk of loss of, and injury or damage to, the Work or any portion thereof (including owner-furnished supplies, material, equipment or other items to be utilized with or incorporated in the Work by Contractor while at the Project site) to the fullest extent of the law. The Contractor shall rebuild, repair, restore and make good losses of, and injuries or damages to, the Work or any portion thereof (including owner-furnished supplies, material, equipment or other items at the Project site to be utilized with or incorporated in the Work by Contractor) before Final Completion of the Work.

17.8.9 No Waiver - Failure of SANBAG to enforce in a timely manner any of the provisions of this Article shall not act as a waiver to enforcement of any of these provisions at a later date.

17.8.10 Subcontractors' Insurance - Subcontractors shall be subject to all of the insurance requirements stated in this Article. CONTRACTOR shall require its subcontracts to bind the subcontractors to the insurance provisions of this Article. CONTRACTOR shall furnish SANBAG with separate certificates and endorsements for each subcontractor.

ARTICLE 18. INDEMNITY

CONTRACTOR agrees to indemnify, defend (with counsel reasonably approved by SANBAG and hold harmless San Bernardino County Transportation Commission, San Bernardino Associated Governments, San Bernardino County Transportation Authority, San Bernardino County Service Authority for Freeway Emergencies, San Bernardino County Congestion Management Agency, Omnitrans, the City of San Bernardino, and their respective officers, directors, members, employees, contractors, agents and volunteers (collectively the "Indemnitees") from any and all claims, actions, losses, damages, and/or liability arising out of this Contract from any cause whatsoever, including the acts, errors, or omissions of any person and for any costs or expenses incurred by the Indemnitees on account of any claim except where such indemnification is prohibited by law. To the extent permitted by law, CONTRACTOR's duty to defend and indemnification obligation shall apply regardless of the existence or degree of

fault of any of the Indemnitees. The duty of CONTRACTOR and its insurers to provide a defense shall be immediate upon receipt of a written tender of defense from any of the Indemnitees, notwithstanding any subsequent allocation of defense costs that may be required by law. CONTRACTOR's indemnification obligation applies to the "passive" negligence of any of the Indemnitees, but does not apply to the "sole" or "active" negligence or "willful misconduct" of any of the Indemnitees within the meaning of Civil Code section 2782.

ARTICLE 19. OWNERSHIP OF DOCUMENTS

All deliverables, including but not limited to, drawings, reports, worksheets, and other data developed by CONTRACTOR under this Contract shall become the property of SANBAG when prepared, whether delivered to SANBAG or not.

ARTICLE 20. RECORD AND INSPECTION AND AUDITING

SANBAG, or any of its designees, representatives or agents, including but not limited to the U.S. Department of Transportation, Federal Highway Administration or Federal Transit Administration shall at all times have access during normal business hours to CONTRACTOR's operations and products wherever they are in preparation or progress, and CONTRACTOR shall provide sufficient, safe and proper facilities for such access and inspection thereof. Inspection or lack of inspection by SANBAG shall not be deemed to be a waiver of any of their rights to require CONTRACTOR to comply with the Contract or to subsequently reject and unsatisfactory Work or products.

ARTICLE 21. INDEPENDENT CONTRACTOR

CONTRACTOR is and shall be at all times an independent contractor. Accordingly, all Work provided by CONTRACTOR shall be done and performed by CONTRACTOR under the sole supervision, direction and control of CONTRACTOR. SANBAG shall rely on CONTRACTOR for results only, and shall have no right at any time to direct or supervise CONTRACTOR or CONTRACTOR's employees in the performance or as to the manner, means and methods by which work is to be performed. All personnel furnished by CONTRACTOR pursuant to this Contract, and all representatives of CONTRACTOR shall be and remain the employees or agents of CONTRACTOR or of CONTRACTOR's subcontractors at all times, and shall not at any time or for any purpose whatsoever be considered employees or agents of SANBAG.

ARTICLE 22. ATTORNEY'S FEES

If any legal action is instituted to enforce or declare any party's rights under the Contract, each Party, including the prevailing Party, must bear its own costs and attorney's fees. This Article shall not apply to those costs and Attorney's fees directly arising from any third party legal action against a Party hereto and payable under the "Indemnity" provision of the Contract.

ARTICLE 23. GOVERNING LAW AND VENUE

This Contract shall be subject to the law and jurisdiction of the State of California. The Parties acknowledge and agree that this Contract was entered into and intended to be performed in whole or substantial part in San Bernardino County, California. The Parties agree that the venue for any action or claim brought by any party to this Contract will be the Superior Court of California, San Bernardino County. Each Party hereby waives any law or rule of court, which would allow them to request or demand a change of venue. If any action or claim concerning

this Contract is brought by any third party, the Parties hereto agree to use their best efforts to obtain a change of venue to the Superior Court of California, San Bernardino County.

ARTICLE 24. FEDERAL, STATE AND LOCAL LAWS

CONTRACTOR warrants that in performance of this Contract, it shall comply with all applicable federal, State and local laws, ordinances, rules and regulations.

ARTICLE 25. PRECEDENCE

25.1 The Contract consists of the General Terms and Conditions, Notice To Bidders and Special Provisions (Attachment "C"), documents noted in the Notice to Bidders and Special Provisions (Attachment "C") as "Contract Documents", Project Plans (Attachment "D"), Standard Specifications and Plans (Attachment "D"). SANBAG's Invitation For Bids and bidders' bid, all of which are incorporated herein by this reference.

25.2 The following order of precedence shall apply as noted in the Notice to Bidders and Special Provisions (Attachment "C")

ARTICLE 26. COMMUNICATIONS AND NOTICES

Notices sent by mail shall be by United States Mail, postage paid, certified mail (return receipt requested). Any and all notices permitted or required to be given hereunder shall be deemed duly given, and received when; (a) upon actual delivery, if delivery is personally made; or if made by fax during regular business hours; (b) the first business day following delivery by fax when made not during regular business hours; or (c) the fourth business day following deposit of such notice into the United States Mail. Each such notice shall be sent to the respective Party at the address indicated below or to any other address as the respective Parties may designate from time to time by a notice given in accordance with this Article. CONTRACTOR shall notify SANBAG of any changes within ten (10) business days of the change.

To CONTRACTOR	**To SANBAG**
	San Bernardino Associated Governments
	1170 W. 3rd Street, 2nd Floor
	San Bernardino, CA 92410-1715
Attn:	**Attn: Carrie Schindler**
	cc: Procurement Manager
Phone:	**Phone: (909) 884-8276**

ARTICLE 27. FEDERAL CHANGES

CONTRACTOR shall at all times comply with all applicable Federal Transit Administration regulations, policies, procedures and directives, including without limitation those listed directly or by reference in this Contract, as they may be amended time to time through the term of this Contract. CONTRACTOR's failure to comply shall constitute a material breach of Contract.

ARTICLE 28. NO OBLIGATION BY THE FEDERAL GOVERNMENT

(1) CONTRACTOR acknowledges and agrees that, notwithstanding any concurrence by the Federal Government in or approval of the solicitation or award of the Contract, absent the express written consent by the Federal Government, the Federal Government is not a party to this Contract and shall not be subject to any obligations or liabilities to the CONTRACTOR, or any other party (whether or not a party to the Contract) pertaining to any matter resulting from the Contract. (2) CONTRACTOR agrees to include the above clause in each subcontract financed in whole or in part with Federal assistance provided by FTA. It is further agreed that the clause shall not be modified, except to identify the subcontractor who will be subject to its provisions.

ARTICLE 29 - LIQUIDATED DAMAGES

Should CONTRACTOR fail to complete all work within the time specified herein, including any written authorized changes, the actual damages to SANBAG for the delay will be difficult or impossible to determine. Therefore, in lieu of actual damages, CONTRACTOR shall pay SANBAG the sum of **One Thousand Two Hundred Dollars $1,200.00** per each calendar day of delay as identified in the weekly statement of working days issued by SANBAG. SANBAG shall not withhold liquidated damages if the delay is determined by SANBAG to be excusable in accordance with the Force Majeure article of this Contract. SANBAG may extend the period of performance of this Contract when in its sole judgment, sufficient justification to do so.

ARTICLE 30. ASSIGNMENT

CONTRACTOR agrees not to sell, transfer, or otherwise dispose of any contract part either voluntarily or by operation of law without prior written consent from SANBAG.

ARTICLE 31. SUBCONTRACTS

31.1 CONTRACTOR shall perform with its own organization contract work amounting to not less **than 30 percent** (or a greater percentage if specified elsewhere in the Contract) of the total original contract price, excluding any specialty items designated by SANBAG. Specialty items may be performed by subcontract and the amount of any such specialty items performed may be deducted from the total original contract price before computing the amount of work required to be performed by CONTRACTOR's own organization (23 CFR 635).

31.1.1 "Its own organization" shall be construed to include only workers employed and paid directly by the prime CONTRACTOR and equipment owned or rented by the prime CONTRACTOR, with or without operators. Such term does not include employees or equipment of a subcontractor, assignee, or agent of the prime CONTRACTOR.

31.1.2 "Specialty Items" shall be construed to be limited to work that requires highly specialized knowledge, abilities, or equipment not ordinarily available in the type of contracting organizations qualified and expected to bid on the contract as a whole and in general are to be limited to minor components of the overall contract. The contract amount upon which the requirements set forth in this Contract is computed includes the cost of material and manufactured products, which are to be purchased or produced by the CONTRACTOR under the contract provisions.

31.2 CONTRACTOR shall furnish (a) a competent superintendent or supervisor who is employed by the firm, has full authority to direct performance of the work in accordance with the Contract requirements, and is in charge of all construction operations (regardless of who performs the work) and (b) such other of its own organizational resources (supervision, management, and engineering services) as SANBAG determines is necessary to assure the performance of the Contract.

31. 3 No portion of the Contract shall be sublet, assigned or otherwise disposed of except with the prior written consent of SANBAG, or authorized representative, and such consent when given shall not be construed to relieve CONTRACTOR of any responsibility for the fulfillment of the contract. Written consent will be given only after SANBAG has assured that each subcontract is evidenced in writing and that it contains all pertinent provisions and requirements of the prime contract. CONTRACTOR does not have the right to make any substitutions of any subcontractor listed in its Bid, except in accordance with the State of California Public Contract Code, section 4100 et. seq. SANBAG's consent to substitution shall not be deemed to relieve CONTRACTOR of its obligation to fully comply with the requirements of this Contract. CONTRACTOR shall be responsible for all acts and omissions of its employees, subcontractors and their employees. CONTRACTOR is responsible for coordinating all work performed by the subcontractors. SANBAG reserves the right, but not the obligation, to review the subcontractor agreements for this project and to require any modifications so as to conform to the requirements set forth in this Contract.

ARTICLE 32. COORDINATION WITH OTHER CONTRACTS

SANBAG may undertake or award other contracts for work, and CONTRACTOR shall cooperate fully with the other CONTRACTOR's and SANBAG's employees or agents and carefully fit its own work to such additional work as may be directed by SANBAG. CONTRACTOR shall not commit or permit any act, which will interfere with the performance of work by any other contractor or by SANBAG.

ARTICLE 33. PREVAILING WAGE REQUIREMENTS

33.1 All laborers and mechanics employed or working upon the site of the work (or under the United States Housing Act of 1937 or under the Housing Act of 1949 in the construction or development of the project), will be paid unconditionally and not less often than once a week, and without subsequent deduction or rebate on any account (except such payroll deductions as are permitted by regulations issued by the Secretary of Labor under the Copeland Act (29 CFR part 3)), the full amount of wages and bona fide fringe benefits (or cash equivalents thereof) due at time of payment computed at rates not less than those contained in the wage determination of the Secretary of Labor which is attached hereto and made a part hereof, regardless of any contractual relationship which may be alleged to exist between the CONTRACTOR and such laborers and mechanics.

33.2 Contributions made or costs reasonably anticipated for bona fide fringe benefits under section 1(b)(2) of the Davis-Bacon Act on behalf of laborers or mechanics are considered wages paid to such laborers or mechanics, subject to the provisions.

ARTICLE 34. SAFETY

34.1 In the performance of this Contract, CONTRACTOR shall comply with all applicable federal, State, and local laws governing safety, health, and sanitation (23 CFR 635) and railroads (49 CFR Sections 200 through 299). The CONTRACTOR shall provide all safeguards, safety devices and protective equipment and take any other needed actions as it determines, or as SANBAG may determine, to be reasonably necessary to protect the life and health of employees on the job and the safety of the public and to protect property in connection with the performance of the work covered by the contract. It is a condition of this Contract, and shall be made a condition of each subcontract, which the CONTRACTOR enters into pursuant to this Contract, that CONTRACTOR and any subcontractor shall not permit any employee, in performance of this Contract, to work in surroundings or under conditions which are unsanitary, hazardous or dangerous to his/her health or safety, as determined under construction safety and health standards (29 CFR 1926) promulgated by the Secretary of Labor, in accordance with section 107 of the Contract Work Hours and Safety Standards Act (40 U.S.C. 333).

34.2 Pursuant to 29 CFR 1926.3, it is a condition of this Contract that the Secretary of Labor or authorized representative thereof, shall have right of entry to any site of contract performance to inspect or investigate the matter of compliance with the construction safety and health standards and to carry out the duties of the Secretary under section 107 of the Contract Work Hours and Safety Standards Act (40 U.S.C. 333).

ARTICLE 35. DISADVANTAGED BUSINESS ENTERPRISE

SANBAG, as the sub-recipient of federal funds is required to comply with any requires established by the main recipient (Omnitrans) to involve Disadvantaged Business Enterprises (DBEs) to the maximum extent feasible in all phases of its procurement practices. The Contractor must certify that it has complied with the requirements of 49 CFR Part 26. The Contractor shall have on file with the FTA an approved or non-disapproved annual DBE subcontracting participation goal program.

The Contractor agrees to ensure that DBEs as defined in 49 CFR Part 26 have the opportunity to participate in the performance of Subcontracts financed in whole or in part with Federal funds provided under the Contract. In this regard, the Contractor shall take all reasonable steps in accordance with 49 CFR Part 26 so that DBEs have the opportunity to compete for and perform the Work. The Contractor shall not discriminate on the basis of race, color, religion, sex, age or national origin, in the award and performance of DOT-assisted contracts.

The Contractor shall supply sufficient information in its payment applications and supporting documentation to enable SANBAG and the FTA to assess whether Contractor is complying with its DBE goals. The Contractor shall comply with its FTA approved or non-disapproved DBE goal program as outlined in Attachment "B" DBE Regulatory Requirements.

ARTICLE 36. ENERGY CONSERVATIONCONTRACTOR agrees to comply with mandatory standards and policies relating to energy efficiency, which are contained in the state energy conservation plan issued in compliance with the Energy Policy and Conservation Act.

ARTICLE 37. NONSEGREGATED FACILITIES

37.1 CONTRACTOR, subcontractor, material supplier, or vendor, as appropriate, certifies that

the firm does not maintain or provide for its employees any segregated facilities at any of its establishments, and that the firm does not permit its employees to perform their services at any location, under its control, where segregated facilities are maintained. CONTRACTOR agrees that a breach of this certification is a violation of the EEO provisions of this Contract. The firm further certifies that no employee will be denied access to adequate facilities on the basis of sex or disability.

37.2 As used in this certification, the term "segregated facilities" means any waiting rooms, work areas, restrooms and washrooms, restaurants and other eating areas, time-clocks, locker rooms, and other storage or dressing areas, parking lots, drinking fountains, recreation or entertainment areas, transportation, and housing facilities provided for employees which are segregated by explicit directive, or are, in fact, segregated on the basis of race, color, religion, national origin, age or disability, because of habit, local custom, or otherwise. The only exception will be for the disabled when the demands for accessibility override (e.g. disabled parking).

37.3 CONTRACTOR agrees that it has obtained or will obtain identical certification from proposed subcontractors or material suppliers prior to award of subcontracts or consummation of material supply agreements of $10,000 or more and that it will retain such certifications in its files.

ARTICLE 38. INCORPORATION OF FTA TERMS

The preceding CONTRACT provisions include, in part, certain Standard Terms and Conditions required by the United States Department of Transportation (DOT), whether or not expressly set forth in the preceding Contract provisions. All contractual provisions required by DOT, as set forth in FTA Circular 4220.1F, are hereby incorporated by reference. Anything to the contrary herein notwithstanding, all FTA mandated terms in the FTA Best Practices Manual Appendix A-1 shall be deemed to control in the event of a conflict with other provisions contained in this Contract. CONTRACTOR shall not perform any act, fail to perform any act, or refuse to comply with any SANBAG requests, which would cause SANBAG to be in violation of the FTA terms and conditions.

ARTICLE 39. PROGRAM FRAUD AND FALSE STATEMENTS

CONTRACTOR acknowledges that the provisions of the Program Fraud Civil Remedies Act of 1986, as amended, 31 U.S.C. & 3801 et. Seq. and U.S. DOT regulations, “Program Fraud Civil Remedies,” 49 C.F.R., Part 31, apply to its actions pertaining to this Project. Upon execution of the underlying contract, the CONTRACTOR certifies or affirms the truthfulness and accuracy of any statement it has made, it makes, it may make, or causes to be made, pertaining to the contract connected with a project that is financed in whole or in part with Federal assistance originally awarded by FTA under the authority of 49 U.S.C. & 5307(n)(1), or the FTA assisted project for which this contract work is being performed, it is essential that all persons concerned with the project perform their functions as carefully, thoroughly, and honestly as possible. Willful falsification, distortion, or misrepresentation with respect to any facts related to the project is a violation of Federal law. In addition to other penalties that may be applicable, the CONTRACTOR further acknowledges that if it makes, or causes to be made, a false, fictitious, or fraudulent claim, statement, submission, or certification, the Federal Government reserves the right to impose the penalties of the Program Fraud Civil Remedies Act of 1986 on the Contractor to the extend the Federal Government deems appropriate.

ARTICLE 40. SPECIFIC FEDERAL REQUIREMENTS

40.1 Without limiting the generality of the CONTRACTOR's obligations under this Contract to comply with all applicable federal laws and regulations, CONTRACTOR specifically agrees to comply with the following:

40.1.1 Buy America. CONTRACTOR agrees to comply with 49 U.S.C. 5323(j) and 49 C.F.R. Part 661, which provide that federal funds may not by obligated unless steel, iron, and manufactured products used in FTA-funded projects are produced in the United States, unless a waiver has been granted by FTA or the product is subject to a general waiver.

40.1.2. Fly America. CONTRACTOR agrees to comply with 49 U.S.C. 40118 (the "Fly America" Act) in accordance with the General Services Administration's regulations at 41 CFR, Part 301-10, which provide that recipients and subrecipients of Federal funds and their contractors are required to use U.S. flag air carriers for personal effects or property, to the extent such service is available, unless travel by foreign air carrier is a matter of necessity, as defined by the Fly America Act. The CONTRACTOR shall submit, if a foreign air carrier was used, an appropriate certification on memorandum adequately explaining why service by a U.S. flag air carrier was not available or why it was necessary to use a foreign air carrier and shall, in any event, provide a certificate of compliance with the Fly America requirements. The CONTRACTOR agrees to include the requirements of this section in all subcontracts that may involve international transportation.

ARTICLE 41. GRATUITIES

CONTRACTOR, its employees, agents or representatives shall not offer or give to an officer, official or employee of SANBAG, gifts, entertainment, payments, loans or other gratuities to influence the award of a contract or obtain favorable treatment under a contract.

ARTICLE 42. CONFIDENTIALITY

Any SANBAG materials to which the CONTRACTOR or its agents has access to or materials prepared by the CONTRACTOR during the term of this Contract shall be held in confidence by the CONTRACTOR, who shall exercise all reasonable precautions to prevent disclosure of confidential information to anyone except as authorized by SANBAG. CONTRACTOR shall not release any reports, information of promotional materials or allow for the use of any photos of the project for any purposes without written approval from SANBAG.

ARTICLE 43. CONVICT LABOR

In connection with the performance of work under this Contract, CONTRACTOR agrees not to employ any person, undergoing sentence of imprisonment at hard labor. This Article does not include convicts who are on parole or probation.

ARTICLE 44. INSPECTION OF SITE

CONTRACTOR acknowledges that it has investigated and satisfied itself as to the conditions affecting the work including, but not restricted to, those bearing upon transportation, disposal, handling and storage of materials, availability of labor, water, electricity and roads and uncertainties of weather, river stages, tides or similar conditions at the site, the conformation and

conditions of the ground, the character of equipment and facilities needed preliminary to and during prosecution of the work. CONTRACTOR fully acknowledges that it has satisfied itself as to the character, quality and quantity of surface and subsurface materials or obstacles to be encountered insofar as this information is reasonably ascertainable from an inspection of the site, including all exploratory work done by SANBAG, as well as from information presented by the drawings and specifications made a part of this Contract. Any failure by CONTRACTOR to acquaint itself with the available information will not relieve it from responsibility for the difficulty of cost of successfully or interpretations made by CONTRACTOR on the basis of the information made available by SANBAG.

ARTICLE 45. RECYCLED PRODUCTS

CONTRACTOR shall comply with all the requirements of section 6002 of the Resource Conservation and Recovery Act as amended, (42 USC sec. 6962), including but not limited to the 40 CFR Part 247 and Executive Order 12873, as applicable. CONTRACTOR agrees to include this Article in all of its subcontracts.

ARTICLE 46. CLEAN WATER REQUIREMENTS

CONTRACTOR shall comply with all applicable standards, orders, or regulations issued pursuant to the Federal Water Pollution Control Act, as amended, 33 U.S.C. 1251 et. seq. CONTRACTOR shall report each violation to SANBAG and understands and agrees that SANBAG who will in turn, report each violation as required to assure notification to FTA and appropriate Environmental Protection Agency (EPA) Regional Office. CONTRACTOR shall include this requirement in each subcontract exceeding $100,000.

ARTICLE 47. DRUG FREE WORKPLACE

CONTRACTOR agrees to comply with the Drug Free Workplace Act of 1990 per Government Code section 8350 et seq.

ARTICLE 48. SEVERABILITY

The partial or complete invalidity in whole or in part, of any one or more of the provisions of this Contract shall not affect the validity or continuing force and effect of any other provision.

ARTICLE 49. FORCE MAJEURE

CONTRACTOR shall not be in default under this Contract in the event that the Work performed by CONTRACTOR is temporarily interrupted or discontinued for any of the following reasons:

riots, wars, sabotage, acts of terrorism, civil disturbances, insurrection, explosion, pandemics, quarantines, acts of God, acts of government or governmental restraint, natural disasters such as floods, earthquakes, landslides and fires, or other catastrophic events which are beyond the reasonable control of CONTRACTOR and which CONTRACTOR could not reasonably be expected to have prevented or controlled. “Other catastrophic events” does not include the financial inability of the CONTRACTOR to perform or failure of the CONTRACTOR to obtain any necessary permits or licenses from other governmental agencies or the right to use the facilities of any public utility where such failure is due solely to the acts or omissions of the CONTRACTOR.

ARTICLE 50. INCORPORATION OF RECITALS

The Recitals stated above are true and correct and are hereby incorporated into this Contract.

ARTICLE 51. EFFECTIVE DATE

The date that this Contract is executed by SANBAG shall be the Effective Date of this Contract.

---------- SIGNATURES ARE ON THE FOLLOWING PAGE ----------

IN WITNESS WHEREOF, the Parties hereto have executed this Contract below.

CONTRACTOR

By: _____
Name
Title

Date: _____

Licensed in accordance with an act providing for registration of contractors.

_____
License Number

_____
Federal Employer
Identification Number

SANBAG

By: _____
Robert Lovingood
President, Board of Directors

Date: _____

APPROVED AS TO FORM

By: _____
Eileen Monaghan Teichert
General Counsel

Date: _____

CONCURRENCE

By: _____
Jeffery Hill
Procurement Manager

Date: _____

BOND FORMS

SANBAG

Contract No. 16-1001520

PAYMENT BOND FORM

KNOW ALL MEN BY THESE PRESENTS:

That the San Bernardino Associated Governments of the State of California (hereinafter referred to as (SANBAG) and _____ (hereinafter referred to as Principal) have by written agreement dated, _____, entered into a contract identified as:

CONTRACT No.: 16-1001520 (hereinafter referred to as the Contract); and

That, pursuant to law and said Contract, and before entering upon the performance of said Contract, the principal is required to file with SANBAG a good and sufficient bond to secure the payment of labor and materials claims.

NOW, THEREFORE, said Principal and insert _____ as corporate surety (hereinafter referred to as Surety), Surety shall be listed in the Insurance Organizations Authorized by the Insurance Commissioner to Transact Business of Insurance in the State of California published by the Department of Insurance, State of California or successor publications, are held firmly bound unto SANBAG in the amount of $ enter amount _____ ($ enter amount) for the payment of which Principal and Surety bind themselves, their heirs, executors, administrators, successors and assigns both jointly and severally.

THE CONDITION OF THIS OBLIGATION IS SUCH that if said principal, his/her or its subcontractors, heirs, executors, administrators, successors, or assigns, shall fail to pay any of the persons named or referred to in section 3181 of the California Civil Code, or amounts due under Unemployment Insurance Code with respect to work or labor performed by any such claimant, or for any amounts required to be deducted, withheld and paid over to the Employment Development Department from the wages of employees of the CONTRACTOR and his subcontractors pursuant to section 13020 of the Unemployment Insurance Code with respect to such work and labor as required by Division 3, Part 4, Title XV, Chapter 7 (commencing at section 3247) of the California Civil Code, or this bond, then said Surety will pay for the same, in an amount not to exceed the amount hereinafter set forth.

This bond shall insure to the benefit of any and all persons, companies and corporations named or referred to in section 3181 of the California Civil Code, so as to give a right of action to them or their assigns in any suit brought upon this bond.

And the said Surety, for value received, hereby stipulates and agrees that all alterations, extensions of time, extra and additional work, and other changes authorized by the Specifications or any part of the contract may be made without securing consent of the Surety on this bond, and any such actions shall not in any way affect the obligations of the Surety on this bond. Surety does hereby waive notice of any alterations, extensions of time, extra and additional work to the terms of the Contract or to the Specifications.

In the event suit is brought upon this Bond by SANBAG and judgment is recovered, Surety shall pay all costs incurred by SANBAG in such suit, including a reasonable attorney's fee to be fixed by the court.

Death, illness, disability or disqualification of the Principal shall not relieve Surety of its obligations hereunder.

Principal: _____

Dated _____ _____

Signature of Principal

_____

Surety

_____

Address

_____

City, State and Zip

Dated _____ _____

Signature of Surety

NOTE: Signatures of those executing for Surety MUST be properly acknowledged.

NOTE: This form may be reproduced for transmittal to the Surety for execution.

SANBAG

Contract No. 16-1001520

PERFORMANCE BOND FORM

KNOW ALL MEN BY THESE PRESENTS:

That the San Bernardino Associated Governments of the State of California (hereinafter referred to as SANBAG) and _____ (hereinafter referred to as Principal) have by written agreement dated _____, 20__, entered into a contract identified as:

CONTRACT NO. 16-1001520

(Hereinafter referred to as the Contract); and that, the Principal is required under the terms and conditions of said Contract to furnish a bond for the faithful performance of Contract.

NOW, THEREFORE, said Principal and _____as corporate surety (hereinafter referred to as Surety), Surety shall be listed in the Insurance Organizations Authorized by the Insurance Commission to Transact Business of Insurance in the State of California published by the Department of Insurance, State of California or successor publications, are held firmly bound unto SANBAG in the amount of $ _____ ($_____) for the payment of which Principal and Surety bind themselves, their heirs, executors, administrators, successors and assigns both jointly and severally.

THE CONDITION OF THIS OBLIGATION IS SUCH that if the said principal, his/her or its subcontractors, heirs, executors, administrators, successors, or assigns, shall perform all of the covenants, conditions and agreements in said Contract and any alteration made as herein provided, in his/her or their part, to be kept and performed at the time, and in the manner therein specified, and shall indemnify and save harmless, SANBAG its officers, agents, and employees, as therein stipulated, then this obligation shall become null and void; otherwise it shall be and remain in full force, virtue and affect.

And the said Surety, for value received, hereby stipulates and agrees that all alterations, extensions of time, extra and additional work, and other changes authorized by the Specifications or any part of the contract may be made without securing consent of the Surety on this bond, and any such actions shall not in any way affect the obligations of the Surety on this bond. Surety does hereby waive notice of any alterations, extensions of time, extra and additional work to the terms of the Contract or to the Specifications.

In the event suit is brought upon this Bond by SANBAG and judgment is recovered, Surety shall pay costs incurred by SANBAG in such suit, including a reasonable attorney's fee to be fixed by the court.

Death, illness, disability or disqualification of the Principal shall not relieve Surety of its obligations hereunder.

Principal: _____

Dated _____ _____

Signature of Principal

_____

Surety

_____

Address

_____

City, State and Zip

Dated _____ _____

Signature of Surety

NOTE: Signatures of those executing for Surety MUST be properly acknowledged.

NOTE: This form may be reproduced for transmittal to the Surety for execution.

A. SANBAG'S RESPONSIBILITY

It is San Bernardino Associated Governments' (SANBAG) policy to provide disadvantaged, minority, and women-owned business enterprises, as defined in Title 49 CFR Part 26, an equitable opportunity to participate in all contracting opportunities. SANBAG's agreements with Federal Transit Administration (FTA) and Federal Highway Administration (FHWA) regarding its DBE programs, which include minority and women-owned business enterprises, are designed to administer contracts, Contractor selection, and all related procurement activities without regard to race, color, religion, disability, political beliefs, age, national origin, gender, veteran status, or cultural background. Accordingly, no firm or individual shall be denied the opportunity to compete for SANBAG contracts by reasons so stated or implied.

In accordance with federal financial assistance agreements with the U.S. Department of Transportation (U.S. DOT), Caltrans and SANBAG have adopted a Disadvantaged Business Enterprise (DBE) Policy and Program, in conformance with Title 49 CFR Part 26, "Participation by Disadvantaged Business Enterprises in Department of Transportation Programs".

This DOT-assisted project is subject to these stipulated regulations. In order to ensure that SANBAG achieves its overall DBE Program goals and objectives, SANBAG encourages the participation of small businesses, including DBEs as defined in 49 CFR 26, in the performance of contracts financed in whole or in part with U.S. DOT funds. In addition, this project is subject to Caltrans Disadvantaged Business Enterprise (DBE) requirements.

In the event of any conflicts or inconsistencies between the CFR and SANBAG's DBE Program with respect to DOT-assisted contracts, the CFR shall prevail.

B. DISADVANTAGE

SANBAG, as the subrecipient of Federal Transportation Administration funds is obligated to comply with all rules and regulation set by FTA and the direct receipient of the funds. Omnitrans, the direct recipient of FTA funds. has established a Race Neutral Federal Transportation Administration (FTA) DBE program and as such, there is no DBE goal on this project. However, it is the policy of both SANBAG and Omnitrans to ensure non-discrimination in the award and administration of all contracts and to create a level playing field on which DBEs can compete fairly for contracts and subcontracts. SANBAG highly encourages the participation of DBE contractors and the utilization of DBE subcontractors in this project. Omnitrans as the direct recipient of federal funds for this project has an overall agency DBE goal of 8.4% and any DBEs on this project will be used to satisfy the overall agency DBE goal. If the awarded firm has a total DBE commitment (15-G) in excess of the DBE goal, the firm will be held to the higher commitment amount.

Only DBEs who meet the definition contained within these provisions and who have been certified at the time of Bid opening may be credited toward the goal.

If the DBE goal is not met, the firm must demonstrate that adequate good faith efforts were made to meet the goal.

Specific instructions and copies of required forms are included in this Attachment.

C. DEFINITIONS

Attached as Attachment "B" is the Regulatory Requirements set by the Federal Transit Administration (FTA) outlining the DBE requirements and regulations of FTA Federal Funds. The following

definitions apply to the terms s used in these provisions:

1. **"Disadvantaged Business Enterprise (DBE)"** means a small business concern: (a) which is at least 51 percent owned by one or more socially and economically disadvantaged individuals or, in the case of any publicly-owned business, at least 51 percent of the stock of which is owned by one or more socially and economically disadvantaged individuals; and (b) whose management and daily business operations are controlled by one or more of the socially and economically disadvantaged individuals who own it.

2. **"Disadvantaged Business Enterprise (DBE)"** is a certified DBE owned by one (1) of the following six (6) groups: African American, Asian-Pacific American, Hispanic American, Subcontinent Asian American, Native American and Women owned businesses, which were identified by the Federal Highway Administration (FHWA).

3. **"Small Business Concern"** means a small business as defined pursuant to section 3 of the Small Business Act and relevant regulations promulgated pursuant thereto, except that a small business concern shall not include any concern or group of concerns controlled by the same socially and economically disadvantaged individual or individuals which has annual average gross receipts in excess of $22.41 million over the previous three fiscal years.

4. **"Socially and Economically Disadvantaged Individuals"** means those individuals who are citizens of the United States (or lawfully admitted permanent residents) and who are Black Americans, Hispanic Americans, Native Americans, Asian-Pacific Americans, or Asian-Indian Americans, women and any other minorities or individuals found to be disadvantaged by the Small Business Administration pursuant to section 8(a) of the Small Business Act, or by SANBAG pursuant to 49 CFR part 26.65. Members of the following groups are presumed to be socially and economically disadvantaged:

   a. "Black Americans," which includes persons having origins in any of the Black racial groups of Africa;

   b. "Hispanic Americans," which includes persons of Mexican, Puerto Rican, Cuban, Dominican, Central or South American, or other Spanish or Portuguese culture or origin, regardless of race;

   c. "Native Americans," which includes persons who are American Indians, Eskimos, Aleuts, or Native Hawaiians;

   d. "Asian-Pacific Americans," which includes persons whose origins are from Japan, China, Taiwan, Korea, Vietnam, Laos, Cambodia, Burma, Thailand, Malaysia, Indonesia the Philippines, Samoa, Guam, the U.S. Trust Territories of the Pacific, and the Northern Marianas, Macao. Fiji, Tonga, Kirbati, Juvalu, Naura, Micronesia, or Hong Kong;

   e. "Asian-Indian Americans," which includes persons whose origins are from India, Pakistan, Bangladesh, Bhutan, the Maldives Islands, Nepal or Sri Lanka; and

   f. Women, regardless of ethnicity or race.

5. **"Owned and Controlled"** means a business: (a) which is at least 51 percent owned by one or more "Socially and Economically Disadvantaged Individuals" or, in the case of a publicly-owned business, at least 51 percent of the stock of which is owned by one or more "Socially and Economically Disadvantaged Individuals"; and (b) whose management and daily business operations are controlled by one or more such individuals.

6. **"Manufacturer"** means a firm that operates or maintains a factory or establishment that produces on the premises the materials, supplies articles, or equipment required under the contract and of the general character described by specifications.

7. **"Regular Dealer"** means a firm that owns, operates or maintains a store, warehouse, or other establishment in which the materials or supplies required for the performance of the contract are bought, kept in stock, and regularly sold to the public in the usual course of business. The firm must engage in, as its principal business, and in its own name, the purchase and sale of the product in question. A regular dealer in such bulk items as steel, cement, gravel, stone and petroleum products need not keep such products in stock if it owns or operates distribution equipment.

8. **"Other Socially and Economically Disadvantaged Individuals"** means those individuals who are citizens of the United States (or lawfully admitted permanent residents) and who, on a case-by-case basis, are determined by Small Business Administration to meet the social and economic disadvantage criteria described below.

a. Social Disadvantage:

1) The individual's social disadvantage must stem from his/her color, national origin, gender, physical handicap, long-term residence in an environment isolated from the mainstream of American society, or other similar cause beyond the individual's control.

2) The individual must demonstrate that he/she has personally suffered social disadvantage.

3) The individual's social disadvantage must be rooted in treatment, which he/she has experienced in American society, not in other countries.

4) The individual's social disadvantage must be chronic, longstanding and substantial, not fleeting or insignificant.

5) The individual's social disadvantage must have negatively affected his/her entry into and/or advancement in the business world.

6) A determination of social disadvantage must be made before proceeding to make a determination of economic disadvantage.

b. Economic Disadvantage:

1) The individual's ability to compete in the free enterprise system has been impaired due to diminished capital and credit opportunities, as compared to others in the same line of business and competitive market area that are not socially disadvantaged.

2) The following criteria will be considered when determining the degree of diminished credit and capital opportunities of a person claiming social and economic disadvantage:

With respect to the individual:

- Availability of financing
- Bonding capability
- Availability of outside equity capital
- Available markets

With respect to the individual and the business concern:

- Personal and business assets
- Personal and business net worth

- Personal and business income and profits

D. DBE BID SUBMISSION REQUIREMENTS

1. The following forms must be submitted no later than the close of business four (4) business days after Bid submittal

   a. **"Bidders List of Subcontractors (DBE and Non DBE)" -Exhibit 12-B**
   The U.S. Department of Transportation (DOT) requires SANBAG to maintain a "Bidders List" containing information about all firms (DBE and non-DBE) that bid, propose or quote on SANBAG's DOT-assisted contracts, in accordance with 49 CFR Part 26.11, for use in SANBAG's overall annual DBE goal-setting process. Therefore, the bidder shall provide the requested information for every firm who submitted a bid, proposal or quote, including the primary bidder, whether successful or unsuccessful in their attempt to obtain a contract:

   1) Firm name;
   2) Firm address;
   3) Phone number;
   4) A description of the work that each DBE will perform;
   5) Range of annual gross receipts for the last year.

   The "Bidders List of Subcontractors (DBE and Non DBE)" information must be submitted on Exhibit 12-B and submitted with the bid.

   b. **Local Agency Bidder DBE Commitment (Exhibit 15-G)**
   If the bidder is a DBE or intends to utilize DBE subcontractors and/or purchase goods or services from DBE vendors or DBE suppliers in the performance of this contract, the bidder shall provide the following information for every DBE firm who will be proposed and/or listed to participate to facilitate capturing DBE participation under this contract:

   1) The complete name and address of each DBE who will participate in the contract;
   2) A description of the work that each DBE will perform or provide;
   3) The dollar amount of the work to be performed or provided by the DBE;
   4) Valid DBE Certification eligibility status, in conformance with 49 CFR, Part 26.

   c. **Good Faith Efforts (Exhibit 15-H)**

   SANBAG has established a Disadvantaged Business Enterprise (DBE) goal for this project. The lowest, second lowest and third lowest bidders shall submit **Exhibit 15-H** to document adequate good faith efforts. Bidders must submit **Exhibit 15-H** even if the "Local Agency Bidder – DBE Commitment" form (15-G) indicates that the bidder has met the DBE goal. This will protect the bidder's eligibility for award of the contract if the administering agency determines that the bidder failed to meet the goal for various reasons, e.g., a DBE firm was not certified at bid opening, or the bidder made a mathematical error.

   Contractors must submit Good Faith Efforts information on Exhibit 15-H and include supporting documentation no later than close of business four (4) working days after bid submittal.

3. The following form must be submitted by the 15th of each month during the course of the project:

   a. Summary of Disadvantaged Business Enterprise (DBE) – Subcontractors Paid Monthly Report (Form 315)

      Monthly, the prime contractor must complete Form 315 to report all payments made to DBEs. It is important to identify all DBE firms that were paid during the reporting period for the project, including all DBEs listed on the DBE Commitment Form (Exhibit 15G (1)), regardless of tier. The form must be signed and dated by the prime contractor's representative that is responsible for reporting DBE compliance matters. The form must be submitted no later than the 15th day of each month to SANBAG's Contract Administrator.

E. DBE CERTIFICATION

SANBAG is participating as a Non-Certifying Member in the California Unified Certification Program (CUCP). SANBAG requires all DBEs listed by bidder for participation to be certified as eligible DBEs at the time of bid submission. Only participation by DBEs certified by the CUCP under the DOT regulations published under 49 CFR Part 26 may be credited towards race-neutral or race-conscious DBE participation. It is the responsibility of the bidder to verify the DBE certification status of all listed DBEs.

F. DBE ELIGIBILITY AND COMMERCIALLY USEFUL FUNCTION STANDARDS

1. A DBE must be a small business concern as defined pursuant to section 3 of the U.S. Small Business Act and relevant regulations promulgated pursuant thereto.

2. A DBE may participate as a prime contractor, subcontractor, joint venture partner with a prime or subcontractor, vendor of material or supplies, or as a trucking company.

3. A DBE joint venture partner must be responsible for specific contract items of work, or clearly defined portions thereof. Responsibility means actually performing, managing and supervising the work with its own forces. The DBE joint venture partner must share in the capital contribution, control, management, risks and profits of the joint venture commensurate with its ownership interest.

4. A DBE must perform a commercially useful function in accordance with 49 CFR 26.55 (i.e., must be responsible for the execution of a distinct element of the work and must carry out its responsibility by actually performing, managing and supervising the work). A DBE should perform at least **thirty percent (30%)** of the total cost of its contract with its own workforce to presume it is performing a commercially useful function.

5. DBEs must be certified by the California Unified Certification Program (CUCP). Listings of DBEs certified by the CUCP are available from the following sources:

   a. The CUCP web site, which can be accessed at http://www.californiaucp.com; or the Caltrans "Civil Rights" web site at http://www.dot.ca.gov/hq/bep.

   b. If you believe a firm is certified that cannot be located on the database, please contact the Caltrans Office of Civil Rights Certification Unit at (916) 324-8347 for assistance.

c. In order to identify certified DBEs, you must only use the California Unified Certification Program Database (CUCP). ***Certifications from other agencies or organizations will not be accepted.***

i. "FRAUDS" and "FRONTS" - Bidders are hereby cautioned against knowingly and willfully using "fronts" or doing business with DBEs in a manner, which could compromise the DBE's continued eligibility and to meet the DBE goal of this contract. Only legitimate DBEs are eligible to participate in any federally funded contract. The use of "fronts" and "pass through" subcontracts to non-disadvantaged firms constitute criminal violations. Any indication of fraud, waste, abuse or mismanagement of federal funds should be immediately reported to SANBAG or to the Office of Inspector General, U.S. Department of Transportation at the toll-free hotline (800-424-9071), or to the following field office: FTA Special Agent-in-Charge, 201 Mission Street, Suite 1650, San Francisco, CA 94105, (415-774-2729).

G. DBE CREDITING PROVISIONS

1. When a DBE is proposed to participate in the contract, either as a prime contractor or subcontractor, only the value of the work proposed to be performed by the DBE with its own forces may be counted towards DBE participation. If the contractor is a DBE joint venture participant, only the DBE proportionate interest in the joint venture shall be counted.

2. If a DBE intends to subcontract part of the work of its subcontract to a lower tier subcontractor, the value of the subcontracted work may be counted toward DBE participation only if the DBE subcontractor is a certified DBE and actually performs the work with his or her own forces. Services subcontracted to a non-DBE firm may not be credited toward the prime Contractor's DBE attainment.

3. Materials or supplies purchased from DBEs count toward DBE credit, and if a DBE is also a DBE, purchases will count toward the DBE goal under the following conditions:

a. If the materials or supplies are obtained from a DBE manufacturer, 100 percent of the cost of the materials or supplies counts towards the goal. A DBE manufacturer is a firm that operates, or maintains a factory, or establishment that produces on the premises that materials, supplies, articles, or equipment required under the Agreement and of the general character described by the specifications.

b. If the materials or supplies are purchased from a DBE regular dealer, count 60 percent of the cost of the materials or supplies. A DBE regular dealer is a firm that owns, operates or maintains a store, warehouse, or other establishment in which the materials, supplies, articles or equipment of the general character described by the specification and required under the Agreement are bought, kept in bulk items as petroleum products, steel, cement, gravel, stone or in this section.

c. If the person both owns and operates distribution equipment for the products, any supplementing of regular dealers' own distribution shall be, by a long-term lease agreement and not an ad hoc or

agreement-by-agreement basis. Packagers, brokers, manufacturers' representatives, or other persons who arrange or expedite transactions are not DBE regular dealers within the meaning of

this section.

d. Materials or supplies purchased from a DBE, which is neither a manufacturer nor a regular dealer, will be limited to the entire amount of fees or SANBAG's charged for assistance in the procurement of the materials and supplies required or fees or transportation charges for the delivery of materials or supplies on the job site, provided the fees are reasonable and not excessive as compared with fees charged for similar services.

4. For DBE trucking companies: credit for DBEs will count towards DBE credit, under the following conditions:

a. The DBE must be responsible for the management and supervision of the entire trucking operation for which it is responsible on a particular agreement, and there cannot be a contrived arrangement for the purpose of meeting the DBE goal.

b. The DBE must itself own and operate at least one fully licensed, insured, and operational truck used on the agreement.

c. The DBE receives credit for the total value of the transportation services it provides on the agreement using trucks it owns, insures, and operates using drivers it employs.

d. The DBE may lease trucks from another DBE firm including an owner-operator who is certified as a DBE. A DBE who leases trucks from another DBE receives credit for the total value of the transportation services the lessee DBE provides on the contract.

e. The DBE may lease trucks from another DBE firm including an owner-operator. A DBE who leases trucks from a non-DBE is entitled to credit only for the fee or SANBAG it receives as a result of the lease arrangement. A DBE does not receive credit for the total value of the transportation services provided by the lessee, since these services are not provided by the DBE.

For the purposes of this section, a lease must indicate that the DBE has exclusive use and control over the truck. This does not preclude the leased truck from working for others during the term of the lease with the consent of the DBE, as long as the lease gives the DBE absolute priority for use of the leased truck. Leased trucks must display the name and identification number of the DBE.

H. GOOD FAITH EFFORTS

If the bidder fails to meet the established contract-specific DBE goal, the bidder must document Good Faith Efforts to be deemed responsive to the DBE requirements set forth in this solicitation. This means that the bidder must demonstrate that it took all necessary and reasonable steps to achieve the DBE goal that could reasonably be expected to obtain sufficient DBE participation, even if the bidder was not fully successful. The efforts employed by the bidder should be consistent with actively and aggressively trying to obtain DBE participation sufficient to meet the established DBE contract goal. Mere pro forma efforts are not Good Faith Efforts to meet the DBE contract requirements. SANBAG will make a fair and reasonable judgment whether a bidder that did not meet the goal made adequate good efforts to do so.

The apparent low bidder, the second low bidder and the third low bidder shall submit all Good Faith Efforts documentation (undertaken prior to bidding) to SANBAG within four 4 working days after Bid

submittal. The Contractor shall not begin performance of work prior to submitting Good Faith Effort documentation.

Good Faith Efforts must be documented on Exhibit 15-H. The following types of actions and documentation are necessary to evidence such efforts:

1. Identifying efforts made to reasonably structure the contract scope of work for purposes of subcontracting with DBEs. Include documentation showing the portion of the scopes of work DBEs will be solicited to bid/propose and the associated dollar value of each item. bidder should also identify the scope of work that the Bidder intends to perform with its own workforce.

2. Timely place advertisement(s) in one general circulation, one trade association publication and at least one disadvantaged/minority and women business focus medias. The advertisements must include, at a minimum, identification of specific subcontracting opportunities being solicited, project name, location, DBE goal, including identifying SANBAG as Owner, bidder's contact person including name, address, phone, fax, bid/proposal solicitation due date, and statement that bidder intends to conduct itself in good faith with DBE firms for participation on the project. Advertisements should appear at least 15 calendar days prior to Bid submittal due date to considered timely.

3. Provision of extending written notices to DBEs to solicit interest in all of the identified subcontracting areas toward promoting participation. There should be a sufficient number of written invitations to DBE firms for each subcontracting area identified.

   Notices should be issued at least 15 calendar days prior to submittal due date to allow sufficient time for the DBEs to responds to the solicitation.

   Subsequent efforts to follow-up on initial solicitations to DBEs, including contract requirements, Plans (Attachment "D") and specifications timely provided to DBEs for purposes of soliciting their bids. Documentation should include:

   a. Names, addresses and telephone numbers of DBEs contacted by each subcontracting area identified/solicited;

   b. Description of information timely provided to interested DBEs about the contract requirements, Plans (Attachment "D") and specifications to assist DBEs in responding to the solicitation; and the dates and manner in which these documents were made available;

   c. Statement of justification re: unsuccessful solicitation of DBEs; and

   d. Negotiating in good faith with interested DBEs, to facilitate DBE participation. Utilization of a sound basis of selection and/or rejection of DBEs bids.

4. A bidder using good business judgment must consider a number of factors in negotiating with subcontractors, including DBE subcontractors, and must take a firm's price and capabilities, as well as, the contract goal into consideration. The fact that there may be some additional costs involved in using DBEs is not, in itself, sufficient reason for a bidder's failure to meet established contract DBE

goal. Also, the ability or desire of the prime contractor to perform the work of a contract with its own organization does not relieve the bidder of the responsibility to make good faith efforts toward meeting the objectives of DBE goal. Evidence of a willingness to modify planned prime contractor scope or subcontract packaging to facilitate DBE participation will demonstrate serious effort.

5. Barring lack of qualifications to perform work, only significant price differences (the relevant Federal regulations reference 10% or more as significant) between the selected firm and rejected DBE firms' proposed costs would be considered as valid cause for rejecting bids. Additionally, union vs. non-union employee status is not a legitimate cause for the rejection or non-solicitation of bids in the bidder's efforts to meet the project goal.

6. Documentation of such negotiation includes the names, addresses, and telephone numbers of all subcontractors (DBEs and non DBEs) that submitted a bid, including copies of all bids received for each portion of work solicited; and stated reasons for bidder's choice of the selected and/or rejected subcontractor bid. Include in the negotiation document the reasons why additional agreements could not be reached with a DBE to perform the work.

7. In determining whether a bidder has made Good Faith Efforts, SANBAG will take into account, the performance of other bidders in meeting the established contract-specific DBE goal requirements. The individual bidder's effort/commitment in meeting the established contract DBE goal will be evaluated against the average DBE participation commitments by the three (3) low responsive bidders. If there are fewer than three (3) responsive bidders, the average of two (2) bidders' goal commitments will be considered.

8. Provide offer of assistance to interested DBEs in obtaining bonding, lines of credit, and/or insurance required by the Contractor. A description of assistance extended and made available by bidder to interested DBEs in obtaining bonding, lines of credit and/or insurance. At minimum, bidder must provide evidence of the availability of assistance by providing copies of subcontracting advertisements and DBE solicitation letters.

9. Utilization of outreach services available within the DBE community, including contractor groups, local, state and federal DBE offices and other organizations that provide assistance in the recruitment and placement of DBEs. Notices to community outreach services should be issued at least 15 calendar days prior to submittal due date. Copies of letters, faxes, telephone logs, etc., used to contact organizations, which include the names of organizations/groups, dates, names of contacts, and telephone numbers; and copies of correspondence received from these entities acknowledging contact. The bidder must document outreach to a minimum of five (5) organizations/groups.

10. Only those efforts made prior to bid submittal due date will be considered in evaluating Good Faith Efforts. Failure to submit the required Good Faith Effort documentation within four (4) working days after bid submittal will be grounds for finding the bid non-responsive.

For additional assistance with Good Faith Efforts, please refer to SANBAG's website: http://www.sanbag.ca.gov/about/contracting.html.

INSTRUCTIONS-EXHIBIT 12-B BIDDER'S LIST OF SUBCONTRACTORS (DBE AND NON-DBE) PART I AND PART II (CONSTRUCTION CONTRACTS)

ALL BIDDERS:

The U.S. Department of Transportation (DOT) requires SANBAG to maintain a "Bidders List" containing information about all firms (DBE and non-DBE) that bid, propose or quote on SANBAG's DOT-assisted contracts, in accordance with 49 CFR Part 26.11, for use in SANBAG's overall annual DBE goal-setting process. Therefore, the bidder shall provide the requested information for every firm who submitted a quote, bid, or proposal, including the primary bidder whether successful or unsuccessful in their attempt to obtain a contract:

a. Firm name;
b. Firm address;
c. Phone number
d. A description of the work that each DBE will perform;
e. Range of annual gross receipts for the last year;

PART I - Identifies all subcontractors (DBE and Non-DBE) that provided a quote, bid, or proposal.

PART II - Identifies all subcontractors (DBE and Non-DBE) that provided a quote, bid, or proposal but were not selected to participate as a subcontractor on the project.

It is the bidder's responsibility to verify that the DBE(s) falls into one of the following groups in order to count towards the DBE contract goal: 1) Black American; 2) Asian-Pacific American;
3) Hispanic Americans; 4) Subcontinent Asian American; 5) Native American; and 6) Women.

EXHIBIT 12-B BIDDER'S LIST OF SUBCONTRACTORS (DBE AND NON-DBE)

PART I

The bidder shall list all subcontractors (both DBE and non-DBE) in accordance with Section 2-1.054 of the Standard Specifications and per Title 49, Section 26.11 of the Code of Federal Regulations. This listing is required in addition to listing DBE Subcontractors elsewhere in the proposal. **Photocopy this form for additional firms.**

Firm Name/ Address/ City, State, ZIP	Phone/ Fax	Annual Gross Receipts	Description of Portion of Work to be Performed	Local Agency Use Only (Certified DBE?)
Name	*Phone*	☐ < $1 million		☐ YES
		☐ < $5 million		☐ NO
Address		☐ < $10 million		*If YES list DBE #:*
	Fax	☐ < $15 million		
City State ZIP		☐ > $15 million		Age of Firm (Yrs)
Name	*Phone*	☐ < $1 million		☐ YES
		☐ < $5 million		☐ NO
Address		☐ < $10 million		*If YES list DBE #:*
	Fax	☐ < $15 million		
City State ZIP		☐ > $15 million		Age of Firm (Yrs)
Name	*Phone*	☐ < $1 million		☐ YES
		☐ < $5 million		☐ NO
Address		☐ < $10 million		*If YES list DBE #:*
	Fax	☐ < $15 million		
City State ZIP		☐ > $15 million		Age of Firm (Yrs)
Name	*Phone*	☐ < $1 million		☐ YES
		☐ < $5 million		☐ NO
Address		☐ < $10 million		*If YES list DBE #:*
	Fax	☐ < $15 million		
City State ZIP		☐ > $15 million		Age of Firm (Yrs)

Distribution: 1) Original - Local Agency File

EXHIBIT 12-B BIDDER'S LIST OF SUBCONTRACTORS (DBE AND NON-DBE)

PART II

The bidder shall list all subcontractors who provided a quote or bid but were not selected to participate as a subcontractor on this project. This is required for compliance with Title 49, Section 26 of the Code of Federal Regulations. Photocopy this form for additional firms.

Firm Name/ Address/ City, State, ZIP	Phone/ Fax	Annual Gross Receipts	Description of Portion of Work to be Performed	Local Agency Use Only (Certified DBE?)
Name	*Phone*	☐ < $1 million		☐ YES
		☐ < $5 million		☐ NO
Address		☐ < $10 million		*If YES list DBE #:*
	Fax	☐ < $15 million		
City State ZIP		☐ > $15 million		Age of Firm (Yrs.)
Name	*Phone*	☐ < $1 million		☐ YES
		☐ < $5 million		☐ NO
Address		☐ < $10 million		*If YES list DBE #:*
	Fax	☐ < $15 million		
City State ZIP		☐ > $15 million		Age of Firm (Yrs.)
Name	*Phone*	☐ < $1 million		☐ YES
		☐ < $5 million		☐ NO
Address		☐ < $10 million		*If YES list DBE #:*
	Fax	☐ < $15 million		
City State ZIP		☐ > $15 million		Age of Firm (Yrs.)
Name	*Phone*	☐ < $1 million		☐ YES
		☐ < $5 million		☐ NO
Address		☐ < $10 million		*If YES list DBE #:*
	Fax	☐ < $15 million		
City State ZIP		☐ > $15 million		Age of Firm (Yrs.)

Distribution: 1) Original – Local Agency File

INSTRUCTIONS-EXHIBIT 15-G
LOCAL AGENCY BIDDER DBE INFORMATION (Revised 03/09)
(CONSTRUCTION CONTRACTS)

ALL BIDDERS:

It is the bidder's responsibility to verify that the DBE(s) falls into one of the following groups in order to count towards the DBE contract goal: 1) Black American; 2) Asian-Pacific American; 3) Hispanic Americans; 4) Subcontinent Asian American; 5) Native American; 6) Women. This information must be submitted with your bid. **Failure to submit the required DBE commitment will be grounds for finding the bid nonresponsive.**

SUCCESSFUL BIDDER:

The form included in this IFB as 15-G requires specific information regarding the construction contract: Local Agency (SANBAG), location, project description, total contract amount, bidder's name and contract DBE goal.

Form 15G has a column for the Contract Item Number and Item of Work and Description of Services to be Subcontracted or Materials to be provided by DBE's. Prime contractors shall indicate all work to be performed by DBEs including work performed by its own forces, if a DBE. The DBE shall provide a certification number to the Contractor and expiration date. Enter the DBE prime and subcontractor's certification number. The DBE contractors shall notify the Contractor in writing with the date of the decertification if their status should change during the course of the contract. The form has a column for the Names of DBE certified contractors to perform the work (must be certified on the date bids are opened) and include DBE address and phone number.

IMPORTANT: Bidders are to identify **all** DBE firms participating in the project, including all DBE's listed on the DBE Commitment Form (15-G), regardless of tier. Names of the First-Tier DBE subcontractors and their respective item(s) of work listed should be consistent, where applicable, with the names and items of work in the "List of Subcontractors" submitted with your Bid. Provide copies of the DBE's quotes, and if applicable, a copy of the joint venture agreements pursuant to the Subcontractors Listing Laws and the Special Provisions (Attachment "C").

There is a column for the DBE participation dollar amount. Enter the Total Claimed DBE Participation dollars and percentage amount of items of work submitted with your bid pursuant to the Special Provision included in this IFB. (If 100% of item is not to be performed or furnished by the DBE, describe the exact portion of time to be performed or furnished by the DBE.) See section "Disadvantaged Business Enterprise (DBE)," of the Special Provisions (Attachment "C") to determine how to count the participation of DBE firms.

Exhibit 15G must be signed and dated by the successful bidder. Also list a phone number in the space provided and print the name of the person to contact.

EXHIBIT 15-G **CONSULTANT CONTRACT DBE COMMITMENT INFORMATION**

(Inclusive of all DBEs listed in proposal)

Consultant to Complete this Section

1. Local Agency Name: San Bernardino Associated Governments

2. Project Location: _____

3. Project Description: _____

4. Total Contract Amount: $ _____

5. Proposer's Name: _____

6. Total Dollar Amount for all Subconsultants: $ _____

7. Total Number of all Subconsultants: _____

Award DBE/DBE Information

8. Description of Services to be Provided	**9.** DBE/DBE Firm Name and Contact Information	**10.** DBE Cert. Number	**11.** DBE Dollar Amount

Local Agency to Complete this Section

19. Local Agency Contract Number: _____

20. Federal-aid Project Number: _____

21.Contract Execution Date

12. Total Dollars Claimed $ _____

13. Total % Claimed _____%

Local Agency certifies that all DBE certifications are valid and the information on this form is complete and accurate:

22. Local Agency Representative Name (Print)

23. Local Agency Representative Signature **24.** Date

25. Local Agency Representative Title **26.** (Area Code) Tel. No.

14. Preparer's Signature

15. Preparer's Name (Print)

16. Preparer's Title

17. Date **18.** (Area Code) Tel. No.

DBE INFORMATION – EXHIBIT 15-H GOOD FAITH EFFORTS

SANBAG has established a Disadvantaged Business Enterprise (DBE) goal of **8.4 %** for this project. The information provided herein shows that a good faith effort was made.

Lowest, second lowest and third lowest bidders shall submit the following information to document adequate good faith efforts. Bidders should submit the following information even if the "Local Agency Bidder – DBE Commitment" form (15-G) indicates that the bidder has met the DBE goal. This will protect the bidder's eligibility for award of the contract if the administering agency determines that the bidder failed to meet the goal for various reasons, e.g., a DBE firm was not certified at bid opening, or the bidder made a mathematical error.

Submittal of only the "Local Agency Bidder DBE Commitment" form may not provide sufficient documentation to demonstrate that adequate good faith efforts were made.

The following types of actions will be considered as part of the bidder's Good Faith Efforts to obtain DBE participation:

a. The names and dates of each publication in which a request for DBE participation for this project was placed by the bidder. Attach copies of advertisements or proofs of publication:

Publications	Dates of Advertisement

b. The names and dates of written notices sent to certified DBEs soliciting bids for this project and the dates and methods used for following up initial solicitations to determine with certainty whether the DBEs were interested. Attach copies of solicitations, telephone records, fax confirmations etc.

Names of DBEs	Date of Initial Solicitation	Follow-Up Methods & Dates

c. The items of work which the bidder made available to DBE firms, including, where appropriate, any break down of the contract work items (including those items normally performed by the bidder with its own forces) into economically feasible units to facilitate DBE participation. It is the bidder's responsibility to demonstrate that sufficient work to facilitate DBE participation was made available to DBE firms.

Items of Work	Bidder Normally Performs Item (Y/N)	Breakdown of Items	Amount ($)	Percentage of Contract

d. The names, addresses and phone numbers of rejected DBE firms, the reasons for the bidder's rejection of the DBEs, the firms selected for that work (please attach copies of quotes from the firms involved), and the price difference for each DBE if the selected firm is not a DBE.

1. Names, addresses and phone numbers of rejected DBEs and the reasons for the Bidder's rejection of the DBEs:

2. Names, addresses and phone numbers of firms selected for the work identified above:

e. Efforts made to assist interested DBEs in obtaining bonding, lines of credit or insurance, and any technical assistance or information related to the Plans (Attachment “D”), specifications and requirements for the work which was provided to DBEs:

g. Efforts made to assist interested DBEs in obtaining necessary equipment, supplies, materials, or related assistance or services, excluding supplies and equipment the DBEsubcontractor purchases or leases from the prime contractor or its affiliate:

h. The names of agencies, organizations or groups contacted to provide assistance in contacting, recruiting and using DBE firms. Attach copies of requests to agencies and any responses received, i.e., lists, Internet page download, etc.

Names of Agency/Organization	Method/Date of Contact	Results

i. Any additional data to support a demonstration of good faith efforts please include here.

j. Bidders are advised to attach all requested documents to this form. Include any and all supplemental materials necessary in order to demonstrate Good Faith Efforts.

INSTRUCTIONS – SUMMARY OF MONTHLY DBE PAYMENTS - FORM NO. 315
(CONSTRUCTION CONTRACTS) (Revised 1/11)
SUCCESSFUL BIDDER:

This form requires specific information regarding the Disadvantaged Business Enterprise subcontractors paid on this construction contract.

The form must be completed for all DBEs – including **all** DBEs paid for each monthly period. The form requires that the Reporting Period (month/year) be included. A Report Number should also be completed. This field should include a sequential number with the first form having number "1". The date prepared should also be included.

IMPORTANT: Identify **all** DBE firms that were paid during the reporting period for the project -- including all DBEs listed on the DBE Commitment form (Exhibit 15-G), regardless of tier. Names of the First Tier DBE Subcontractors and their respective item(s) of work listed should be consistent, where applicable, with the names and items of work in the "List of Subcontractors" submitted with your bid.

There is a column for the "Dollars Paid This Month". Enter the Total amount paid for each DBE firm for the reporting period. Also include the total amount paid to date, which shall include the amount paid for the current reporting period.

Include the Schedule Activity ID for construction contracts. Include a brief description for the type of work performed. The original dollar amount committed to the DBE firm should be included in the appropriate Column and any increase or decrease in the subcontract amount resulting from a change order shall be included in the "Dollar +/- resulting from Change order Activity" column.

Form 315 must be signed and dated by the prime contractor's representative that is responsible for reporting DBE compliance matters. The form must be submitted to SANBAG's Contract Administrator no later than the 15th day of each month.

Governments SANBAG Working Together

San Bernardino Associated Governments

Summary of Disadvantaged Business Enterprise (DBE) - Subcontractors Paid Monthly Report

Reporting Period (Month/Year)	Report Number	Date Prepared

1) Project Name			2) Project Location		
3) Contract Number		4) Original Contract Award Amount		5) Contract Award Date	
6) Current Contract Value		7) SANBAG Payment to Prime This Month		8) Total Amount Paid to Prime to Date	
9) Date of Last Progress Payment Received from SANBAG		10) Percent of Project Complete		11) DBE Goal Percentage (committed)	

12) Prime Contractor		13) Contact Person	
14) Street Address		15) City/State/Zip	
16) Area Code/Phone No.		17) Email Address	

18) SUBCONTRACTOR/SUPPLIER		Dollars Paid This Month	Dollar Amount Paid to Date	Schedule Activity ID (Construction only)	Type of Work Performed	Original Dollar Amount Committed	Dollar +/- resulting from Change Order Activity
Subcontractor/Supplier #1							
Name							
Address							
Area Code/Phone							
Contact Person							
Subcontractor/Supplier #2							
Name							
Address							
Area Code/Phone							
Contact Person							
Subcontractor/Supplier #3							
Name							
Address							
Area Code/Phone							
Contact Person							

San Bernardino Associated Governments

Summary of Disadvantaged Business Enterprise (DBE) - Subcontractors Paid Monthly Report

Reporting Period (Month/Year)	Report Number	Date Prepared

Invoice Payment History

DBE Subcontractors/Suppliers		Sub/Supplier #1	Sub/Supplier #2	Sub/Supplier #3	Sub/Supplier #4	Sub/Supplier #5	Sub/Supplier #6	DBE Sub/Supplier Total
Invoice Numbers	Invoice Date and Date Paid	Amount Paid $	Amount Paid $	Amount Paid $	Amount Paid $	Amount Paid $	Amount Paid $	Amount Paid $
GRAND TOTAL (Paid to Date)								

San Bernardino Associated Governments

Summary of Disadvantaged Business Enterprise (DBE) - Subcontractors Paid Monthly Report

Reporting Period (Month/Year)	Report Number	Date Prepared

Instructions – Summary of Monthly DBE Payments Information
SANBAG Form 315 (Construction Contracts)

SUCCESSFUL BIDDER:

This form requires specific information regarding the disadvantaged business enterprise subcontractors paid on this construction contract.

The form must be completed for all DBEs – including all UDBEs paid for each monthly period. The form requires that the Reporting Period (month/year) be included. A Report Number should also be completed. This field should include a sequential number with the first form having number "1". The date prepared should also be included.

IMPORTANT: Identify **all** DBE firms that were paid during the reporting period for the project -- including all UDBEs listed on the UDBE Commitment form (Exhibit 15G(1)), regardless of tier. Names of the First Tier DBE Subcontractors and their respective item(s) of work listed should be consistent, where applicable, with the names and items of work in the "List of Subcontractors" submitted with your bid.

There is a column for the "Dollars Paid This Month". Enter the Total amount paid for each DBE firm for the reporting period. Also include the total amount paid to date, which shall include the amount paid for the current reporting period.

Include the Schedule Activity ID for construction contracts. Include a brief description for the type of work performed. The original dollar amount committed to the DBE firm should be included in the appropriate Column and any increase or decrease in the subcontract amount resulting from a change order shall be included in the "Dollar +/- resulting from Change Order Activity" column.

SANBAG Form 315 must be signed and dated by the prime contractor's representative that is responsible for reporting DBE compliance matters. The form must be submitted no later than the 15th day of each month.

ATTACHMENT "B"
FEDERAL TRANSIT ADMINISTRATION
REGULATORY REQUIREMENTS

ATTACHMENT "B"
REGULATORY REQUIREMENT
Table of Contents

Contents

ADMINISTRATIVE CODE 2
DISCRIMINATION 3
WHISTLEBLOWER REQUIREMENTS 3
PUBLIC RECORDS ACT 3
ACCESS TO RECORDS 4
FEDERAL FUNDING, INCORPORATION OF FEDERAL TRANSIT ADMINISTRATION (FTA) TERMS, AND FEDERAL CHANGES 4
ENERGY CONSERVATION REQUIREMENTS 5
CIVIL RIGHTS REQUIREMENTS 5
NO GOVERNMENT OBLIGATION TO THIRD PARTIES 7
PROGRAM FRAUD AND FALSE OR FRAUDULENT STATEMENTS OR RELATED ACTS 7
SUSPENSION AND DEBARMENT 8
RECYCLED PRODUCTS 8
CLEAN WATER AND CLEAN AIR REQUIREMENTS 9
COMPLIANCE WITH FEDERAL LOBBYING POLICY 9
BUY AMERICA 10
CARGO PREFERENCE 10
FLY AMERICA 11
CONTRACT WORK HOURS AND SAFETY STANDARDS ACT 11
DISADVANTAGED BUSINESS ENTERPRISE (DBE) 49 CFR Part 26 13
ADA ACCESS 14
ALCOHOL AND DRUG-FREE WORKPLACE PROGRAM 16
TRANSIT EMPLOYEE PROTECTIVE ARRANGEMENTS 17
BONDING REQUIREMENTS 18
DAVIS-BACON AND COPELAND ANTI-KICKBACK ACTS 18
PRIVACY ACT - 5 U.S.C. 552 25
TERMINATION 49 U.S.C. Part 18 FTA Circular 4220.1F 26
SEISMIC SAFETY REQUIREMENTS 42 U.S.C. 7701 et seq. 49 CFR Part 41 28
BREACHES AND DISPUTE RESOLUTION 49 CFR Part 18 FTA Circular 4220.1F 28
VETERANS PREFERENCE 29

REGULATORY REQUIREMENTS

*** Marks Required Subcontract Provisions that must flow down to all subcontracts as defined in the Article entitled SUBCONTRACTORS AND SUPPLIERS herein.**

RR-01
ADMINISTRATIVE CODE *

A. **Applicability**

This Article applies to all contracts.

B. **Compliance with §§1090 et. seq. and §§87100 et. seq. of the California Government Code**

Contractor shall comply with all applicable provisions of §§1090 et. seq. and §§87100 et. seq. of the California Government Code. Without reducing or affecting its obligation to comply with any and all of said provisions, Contractor specifically covenants:

1. Contractor shall not cause or permit any member, officer, or employee of Omnitrans to have any financial interest in the Contract;

2. Contractor shall not enter into any Subcontract involving services or property with a person or business prohibited from transacting such business with Omnitrans;

3. Contractor warrants and represents that to its knowledge no Board member, officer, or employee of Omnitrans has any interest, whether contractual, non-contractual, financial or otherwise, in this Contract, or in the business or any other contract or transaction of the Contractor or any Subcontractor and that if any such interest comes to Contractor's knowledge at any time, Contractor shall make a full and complete disclosure of all such information in writing to Omnitrans.

C. **Campaign Contributions**

Neither Contractor nor its Agents shall give or offer to give any campaign contribution to any member of Omnitrans Board of Directors in violation of the California Government Code §§84300 et seq., or of the Administrative Code. Contractor shall submit a Certification of Campaign Contributions with all COs of two hundred thousand dollars ($200,000) or more.

RR-02
DISCRIMINATION *

A. **Applicability**
This Article applies to all contracts.

B. In connection with the performance of Work provided for under this Contract, Contractor agrees that it will not, on the grounds of race, religious creed, color, national origin, ancestry, physical disability, medical condition, marital status, sex, sexual orientation, or age, discriminate or permit discrimination against any person or group of persons in any manner prohibited by Federal, State or local laws.

RR-03
WHISTLEBLOWER REQUIREMENTS *

A. **Applicability**

This Article applies to all contracts.

B. Contractor shall not adopt any rule, regulation, or policy preventing an employee from disclosing information to a government or law enforcement agency, where the employee believes the information discloses violation or noncompliance with a state or Federal regulation; nor shall Contractor retaliate against an employee for taking such actions as set forth in the t. seq.

RR-04
PUBLIC RECORDS ACT *

A. **Applicability**

This Article applies to all contracts.

B. Except as otherwise provided herein, all records, documents, drawings, plans, specifications, and all other information relating to the conduct of Omnitrans business, including all information and documents submitted by Contractor ("Records"), shall become the exclusive property of Omnitrans and shall be deemed public records. Said Records are subject to the provisions of the California Public Records Act (Government Code §6250 et. seq.). Omnitrans use and disclosure of its records are governed by this Act. Omnitrans will use its best efforts to inform the Contractor of any request for any financial records or documents marked "Trade Secret", "Confidential" or "Proprietary" provided by Contractor to Omnitrans. Omnitrans will not advise as to the nature or content of documents entitled to protection from disclosure under the California Public Records Act.

C. In the event of litigation concerning the disclosure of any Records, Omnitrans sole involvement will be as a stakeholder, retaining the Records until otherwise ordered by a

court. The submitting party, at its sole expense and risk, shall be fully responsible for any and all fees for prosecuting or defending any action concerning the Records and shall indemnify and hold Omnitrans harmless from all costs and expenses including attorney's fees in connection with any such action.

RR-05
ACCESS TO RECORDS *

A. **Applicability**

This Article applies to all federally funded contracts.

B. Contractor agrees to provide Omnitrans, the FTA Administrator, the Comptroller General of the United States or any of their authorized representatives access to any books, documents, papers and records of the Contractor which are directly pertinent to this Contract for the purposes of making audits, examinations, excerpts and transcriptions. Contractor also agrees, pursuant to 49 C. F. R. 633.17 to provide the FTA Administrator or the FTA's authorized representatives, including any FTA Project Management Oversight Contractor, access to Contractor's records and construction sites pertaining to a major capital project, defined at 49 U.S.C. 5302(a) 1, which is receiving federal financial assistance through the programs described at 49 U.S.C. 5307, 5309 or 5311.

C. If this Contract is for a capital project or improvement (defined at 49 U.S.C. 5302(a) 1) and was entered in to through other than competitive bidding, the Contractor shall make records related to this Contract available to Omnitrans, the Secretary of Transportation and the Comptroller General or any authorized officer or employee of any of them for the purposes of conducting an audit and inspection.

D. Contractor shall maintain all books, records, accounts and reports required under this Contract for a period of not less than three years after the date of termination or expiration of this Contract, except in the event of litigation or settlement of claims arising from the performance of this Contract, in which case Contractor agrees to maintain same until Omnitrans, the FTA Administrator, the Comptroller General, or any of their duly authorized representatives, have disposed of all such litigation, appeals, claims or exceptions related thereto.

RR-06
FEDERAL FUNDING, INCORPORATION OF FEDERAL TRANSIT ADMINISTRATION (FTA) TERMS, AND FEDERAL CHANGES*

A. Applicability

This Article applies to all federally funded contracts.

B. This Contract includes, in part, certain Standard Terms and Conditions required by DOT, whether or not expressly set forth in the Contract provisions. All contractual provisions

required by DOT, as set forth in FTA Circular 4220.1F, dated November 1, 2008 and revised March 18, 2013 (including any changes), and are hereby incorporated by reference. Anything to the contrary herein notwithstanding, all FTA mandated terms shall be deemed to control in the event of a conflict with other provisions contained in this Contract. Contractor shall not perform any act, fail to perform any act, or refuse to comply with any Omnitrans requests which would cause Omnitrans to be in violation of the FTA terms and conditions.

This Contract is subject to a financial assistance agreement between Omnitrans and the Federal Transit Administration of the US Department of Transportation and all laws, regulations, guidelines, and provisions of the financial assistance agreement apply to this Contract and are incorporated by reference as if fully set forth herein.

C. Contractor shall at all times comply with all applicable federal laws and regulations, including without limitation FTA regulations, policies, procedures and directives, including those listed directly or by reference in Applicable Grant Agreements between Omnitrans and FTA, as they may be amended or promulgated from time to time during the term of this Contract collectively "Federal Requirements". These Federal Requirements may change and the changed Federal Requirements will apply to this Contract as required unless the Federal Government determines otherwise. Contractor's failure to so comply with the Federal Requirements shall constitute a material breach of this Contract.

RR-07
ENERGY CONSERVATION REQUIREMENTS

A. **Applicability**

This Article applies to all federally funded contracts.

B. Contractor shall comply with mandatory standards and policies relating to energy efficiency which are contained in the state energy conservation plan issued in compliance with the Energy Policy and Conservation Act 42 USC §6321 et seq.

RR-08
CIVIL RIGHTS REQUIREMENTS *

A. **Applicability**

This Article applies to all federally funded contracts.

B. Nondiscrimination - In accordance with Title VI of the Civil Rights Act, as amended, 42 U.S.C. § 2000d, section 303 of the Age Discrimination Act of 1975, as amended, 42 U.S.C. § 6102, section 202 of the Americans with Disabilities Act of 1990, 42 U.S.C. § 12132, and Federal transit law at 49 U.S.C. § 5332, Contractor shall not discriminate against any employee or applicant for employment because of race, color, creed, national

origin, sex, age, or disability. In addition, Contractor shall comply with applicable Federal implementing regulations and other implementing requirements FTA may issue.

C. Equal Employment Opportunity

(a) Race, Color, Creed, National Origin, Sex - In accordance with Title VII of the Civil Rights Act, as amended, 42 U.S.C. § 2000e, and Federal transit laws at 49 U.S.C. § 5332, Contractor shall comply with all applicable equal employment opportunity requirements of U.S. Department of Labor (U.S. DOL) regulations, "Office of Federal Contract Compliance Programs, Equal Employment Opportunity, Department of Labor," 41 C.F.R. Parts 60 et seq. , (which implement Executive Order No. 11246, "Equal Employment Opportunity," as amended by Executive Order No. 11375, "Amending Executive Order 11246 Relating to Equal Employment Opportunity," 42 U.S.C. § 2000e note), and with any applicable Federal statutes, executive orders, regulations, and Federal policies that may in the future affect activities undertaken in the course of the Contract. Contractor shall take affirmative action to ensure that applicants are employed, and that employees are treated during employment, without regard to their race, color, creed, national origin, sex, or age. Such action shall include, but not be limited to, the following: employment, upgrading, demotion or transfer, recruitment or recruitment advertising, layoff or termination; rates of pay or other forms of compensation; and selection for training, including apprenticeship. In addition, Contractor shall comply with any implementing requirements FTA may issue.

(b) Age - In accordance with section 4 of the Age Discrimination in Employment Act of 1967, as amended, 29 U.S.C. § 623 and Federal transit law at 49 U.S.C. § 5332, Contractor shall refrain from discrimination against present and prospective employees for reason of age. In addition, Contractor shall comply with any implementing requirements FTA may issue.

(c) Disabilities - In accordance with section 102 of the Americans with Disabilities Act, as amended, 42 U.S.C. § 12112, Contractor shall comply with the requirements of U.S. Equal Employment Opportunity Commission, "Regulations to Implement the Equal Employment Provisions of the Americans with Disabilities Act," 29 C.F.R. Part 1630, pertaining to employment of persons with disabilities. In addition, Contractor shall comply with any implementing requirements FTA may issue.

(d) Contractor shall include these requirements in each subcontract, modified only if necessary to identify parties, as required by Federal regulations.

RR-09
NO GOVERNMENT OBLIGATION TO THIRD PARTIES *

A. Applicability

This Article applies to all federally funded contracts.

B. Notwithstanding any concurrence by the Federal Government in or approval of the solicitation or award this Contract, absent the express written consent by the Federal Government, the Federal Government is not a party to this Contract and shall not be subject to any obligations or liabilities to Omnitrans, Contractor, or any other party (whether or not a party to that Contract) pertaining to any matter resulting from this Contract.

Contractor shall include this Article in each Subcontract and shall not modify the Article, except to identify the Subcontractor who will be subject to its provisions.

RR-10
PROGRAM FRAUD AND FALSE OR FRAUDULENT STATEMENTS OR RELATED ACTS *

A. **Applicability**

This Article applies to all federally funded contracts.

B. The provisions of the Program Fraud Civil Remedies Act of 1986, as amended, 31 U.S.C. § 3801 et seq. and U.S. DOT regulations, "Program Fraud Civil Remedies," 49 C.F.R. Part 31, shall apply to actions pertaining to this Contract. Upon execution of this Contract, Contractor certifies or affirms the truthfulness and accuracy of any statement it has made, it makes, it may make, or causes to be made, pertaining this Contract or the FTA assisted project for which this Contract work is being performed. In addition to other penalties that may be applicable, Contractor further acknowledges that if it makes, or causes to be made, a false, fictitious, or fraudulent claim, statement, submission, or certification, the Federal Government reserves the right to impose the penalties of the Program Fraud Civil Remedies Act of 1986 on Contractor to the extent the Federal Government deems appropriate.

C. Contractor also acknowledges that this Contract is connected with a project that is financed in whole or in part with Federal assistance originally awarded by FTA under the authority of 49 U.S.C. § 5307 and if it makes, or causes to be made, a false, fictitious, or fraudulent claim, statement, submission, or certification to the Federal Government, the Government reserves the right to impose the penalties of 18 U.S.C. § 1001 and 49 U.S.C. § 5307(n)(1) on Contractor, to the extent the Federal Government deems appropriate.

D. Contractor shall include this Article in each subcontract financed in whole or in part with Federal assistance provided by FTA. Contractor shall not modify the Article, except to identify the Subcontractor who will be subject to the provisions.

RR-11
SUSPENSION AND DEBARMENT*

A. Applicability

This article applies to federally funded contracts and subcontracts at any level expected to equal or exceed $25,000 as well as any contract or subcontract (at any level) for Federally required auditing services.

B. This Contract is a covered transaction for purposes of 49 CFR Part 29. As such, Contractor shall verify that none of the Contractor, its principals, as defined at 49 CFR 29.995, or affiliates, as defined at 49 CFR 29.905, are excluded or disqualified as defined at 49 CFR 29.940 and 29.945.

Contractor shall comply with 49 CFR 29, Subpart C and shall include the requirement to comply with 49 CFR 29, Subpart C in any lower tier covered transaction it enters into.

C. By entering into this Contract, Contractor certifies that it shall comply with the requirements of 49 CFR 29, Subpart C throughout the period of this Contract. This certification is a material representation of fact relied upon by Omnitrans. If it is later determined that Contractor knowingly rendered an erroneous certification, in addition to remedies available to Omnitrans, the Federal Government may pursue available remedies, including but not limited to suspension and/or debarment.

RR-12
RECYCLED PRODUCTS

A. **Applicability**

This Article applies to federally funded operations/management, construction, or materials & supplies contracts for items designated by the Environmental Protection Agency, when procuring $10,000 or more per year.

B. To the extent practicable and economically feasible, a competitive preference shall be given for products and services that conserve natural resources and protect the environment and are energy efficient.

C. The Contractor agrees to comply with all the requirements of Section 6002 of the Resource Conservation and Recovery Act (RCRA), as amended (42 U.S.C. 6962), including but not limited to the regulatory provisions of 40 CFR Part 247, and Executive Order 12873, as they apply to the procurement of the items designated in Subpart B of 40 CFR Part 247.

RR-13
CLEAN WATER AND CLEAN AIR REQUIREMENTS*

A. Applicability

This Article applies to all federally funded contracts over $100,000.

B. CLEAN WATER REQUIREMENTS

Contractor shall comply with all applicable standards, orders or regulations issued pursuant to the Federal Water Pollution Control Act, as amended, 33 U.S.C. 1251 et seq., and all applicable clean water standards of the State of California and any state or local agency having jurisdiction. Contractor shall report each violation to Omnitrans. Omnitrans will, in turn, report each violation as required to FTA and the appropriate EPA Regional Office, and all other agencies having jurisdiction.

C. CLEAN AIR

Contractor shall comply with all applicable standards, orders or regulations issued pursuant to the Clean Air Act, as amended, 42 U.S.C. §§ 7401 et seq. and all applicable Clean Air Standards of the State of California or any state or local agency having jurisdiction. Contractor shall report each violation to Omnitrans. Omnitrans will, in turn, report each violation as required to FTA, the appropriate EPA Regional Office and all other agencies having jurisdiction.

C. Contractor shall include this Article in each subcontract exceeding $100,000 financed in whole or in part with Federal assistance provided by FTA.

RR-14
COMPLIANCE WITH FEDERAL LOBBYING POLICY *

A. **Applicability**

The following Article applies to federally funded contracts over $100,000.

B. The Byrd Anti-Lobbying Amendment, 31 U.S.C. 1352, requires that Contractors who apply or bid for an award of $100,000 or more shall file the certification required by 49 CFR Part 20, “New Restrictions on Lobbying,” attached hereto as the certification entitled, "Certification of Compliance with Federal Lobbying Requirements." As set forth in the certifications, each tier of subcontractors shall certify to the tier above that it will not and has not used Federal appropriated funds to pay any person or organization for influencing or attempting to influence an officer or employee of any agency, a member of Congress in connection with obtaining any Federal contract, grant or any other award covered by 31 U.S.C. 1352. Each tier shall also disclose the name of any registrant under the Lobbying Disclosure Act of 1995 who has made lobbying contacts on its behalf with

non-Federal funds with respect to that Federal contract, grant or award covered by 31 U.S.C. 1352. Such disclosures shall be forwarded from tier to tier up to Omnitrans.

RR-15
BUY AMERICA *

A. **Applicability**

The following Article applies to federally funded rolling stock purchase and construction contracts over $100,000 and to contracts over $100,000 for materials & supplies for steel, iron, or manufactured products.

B. Contractor shall comply with 49 U.S.C. 5323(j) and 49 CFR Part 661, which provide that Federal funds may not be obligated unless steel, iron, and manufactured products used in FTA-funded projects are produced in the United States, unless a waiver has been granted by FTA or the product is subject to a general waiver. General waivers are listed in 49 C.F.R. 661.7, and include final assembly in the United States for 15 passenger vans and 15 passenger wagons produced by Chrysler Corporation, and microcomputer equipment and software. Separate requirements for rolling stock are set out at 49 U.S.C. 5323(j)(2)(C) and 49 C.F.R. 661.11. Rolling stock must be assembled in the United States and have a 60 percent domestic content.

Omnitrans may investigate Contractor's, any Subcontractor's, and any Supplier's compliance with this Article. If an investigation is initiated, Contractor, Subcontractor, or Supplier shall document its compliance, in accordance with 49 CFR 661.15, and cooperate with the investigation. Contractor shall incorporate the Buy America conditions set forth in this Article in every subcontract or purchase order and shall enforce such conditions.

C. FTA requires a Buy America certification to be submitted with the proposal, or the proposal shall be considered non-responsive.

RR-16
CARGO PREFERENCE*

A. **Applicability**

The following Article applies to federally funded contracts involving equipment, materials, or commodities which may be transported by ocean vessels

B. **USE OF UNITED STATES FLAG VESSELS**

Contractor shall use privately owned United States-Flag commercial vessels to ship at least 50 percent of the gross tonnage (computed separately for dry bulk carriers, dry cargo liners, and tankers) involved, whenever shipping any equipment, material, or

commodities pursuant to this Contract to the extent such vessels are available at fair and reasonable rates for United States-Flag commercial vessels.

Contractor shall furnish within 20 working days following the date of loading for shipments originating within the United States or within 30 working days following the date of leading for shipments originating outside the United States, a legible copy of a rated, "on-board" commercial ocean bill-of -lading in English for each shipment of cargo described in the preceding paragraph to the Division of National Cargo, Office of Market Development, Maritime Administration, Washington, DC 20590 and to the Omnitrans (through Contractor in the case of a subcontractor's bill-of-lading.)

Contractor shall include these requirements in all subcontracts issued pursuant to this Contract when the subcontract may involve the transport of equipment, material, or commodities by ocean vessel.

RR-17
FLY AMERICA

A. **Applicability**

This Article applies to federally funded contracts if the contract or subcontracts may involve the international transportation of goods, equipment, or personnel by air.

B. Contractor agrees to comply with 49 U.S.C. 40118 (the "Fly America" Act) in accordance with the General Services Administration's regulations at 41 CFR Part 301-10, which provide that recipients and sub recipients of Federal funds and their contractors are required to use U.S. Flag air carriers for U.S Government-financed international air travel and transportation of their personal effects or property, to the extent such service is available, unless travel by foreign air carrier is a matter of necessity, as defined by the Fly America Act. Contractor shall submit, if a foreign air carrier was used, an appropriate certification or memorandum adequately explaining why service by a U.S. flag air carrier was not available or why it was necessary to use a foreign air carrier and shall, in any event, provide a certificate of compliance with the Fly America requirements. Contractor agrees to include the requirements of this section in all subcontracts that may involve international air transportation.

RR-18
CONTRACT WORK HOURS AND SAFETY STANDARDS ACT *

A. Applicability

This Article applies to federally funded construction contracts over $2,000 (including ferry vessels), rolling stock purchases over $2,500 and to operations/management contracts over $2,500 (except transportation services)

B. Pursuant to the Labor Standards Provisions Applicable to Non-construction Contracts subject to the Federal Contract Work Hours and Safety Standards Act, 40 U.S.C.A. § 327 through 332 as implemented by U.S. Department of Labor regulations, 29 CFR 5.5 (b) and (c) Contractor and Subcontractor's contracting for any part of the Contract work shall comply with the following:

1. **Overtime requirements** – Neither Contractor nor any Subcontractor contracting for any part of the Contract work that requires or involves the employment of laborers or mechanics shall require or permit any such laborer or mechanic in any workweek in which he or she is employed on such work to work in excess of forty hours in such workweek unless such laborer or mechanic receives compensation at a rate not less than one and one-half times the basic rate of pay for all hours worked in excess of forty hours in such workweek.

2. **Violation; liability for unpaid wages; liquidated damages** – In the event of any violation of the Article set forth in paragraph (1) of this Article Contractor and any Subcontractor responsible therefore shall be liable for the unpaid wages. In addition, Contractor and Subcontractor shall be liable to the United States for liquidated damages. Such liquidated damages shall be computed with respect to each individual laborer or mechanic, including watchmen and guards, employed in violation of the clause set forth in paragraph (1) of this Article, in the sum of ten dollars ($10) for each calendar day on which such individual was required or permitted to work in excess of the standard workweek of forty hours without payment of the overtime wages required by the clause set forth in paragraph (1) of this Article.

3. Withholding for unpaid wages and liquidated damages – Omnitrans shall upon its own action or upon written request of an authorized representative of the Department of Labor withhold or cause to be withheld, from any monies payable on account of work performed by Contractor or Subcontractor under the Contract or any other Federal contract with Contractor, or any other federally-assisted contract subject to the Contract Work Hours and Safety Standards Act, which is held by Contractor, such sums as may be determined to be necessary to satisfy any liabilities of Contractor or Subcontractor for unpaid wages and liquidated damages as provided in the clause set forth in paragraph (2) of this Article.

4. Subcontracts – Contractor or Subcontractor shall insert this Article in any Subcontracts and also an Article requiring the Subcontractors to include this Article in any lower tier Subcontracts. Contractor shall be responsible for compliance by any Subcontractor or lower tier Subcontractor with this Article.

5. Payrolls and basic records – The records to be maintained hereinabove shall be made available by Contractor or Subcontractor for inspection, copying, or transcription by Omnitrans and U.S. Dept. of Labor. Contractor and Subcontractor shall maintain payrolls and basic records during the course of the work and shall preserve them for a period of three (3) years from the completion of the Contract

for all laborers and mechanics, including guards and watchmen, working on the Contract. Such records shall contain the name and address of each such employee, social security number, correct classifications, hourly rates of wages paid, daily and weekly number of hours worked, deductions made and actual wages paid.

RR-19
DISADVANTAGED BUSINESS ENTERPRISE (DBE) 49 CFR Part 26

Disadvantaged Business Enterprises

A. This Contract is subject to the requirements of Title 49, Code of Federal Regulations, Part 26, *Participation by Disadvantaged Business Enterprises in Department of Transportation Financial Assistance Programs.* The national goal for participation of Disadvantaged Business Enterprises (DBE) is 10%. The agency's overall goal for DBE participation is 8.4**%.**

B. Contractor shall not discriminate on the basis of race, color, national origin, or sex in the performance of this contract. Contractor shall carry out applicable requirements of 49 CFR Part 26 in the award and administration of this DOT-assisted Contract. Failure by Contractor to carry out these requirements is a material breach of this Contract, which may result in the termination of this Contract or such other remedy as Omnitrans deems appropriate. Each subcontract Contractor signs with a subcontractor must include the assurance in this paragraph (*see* 49 CFR 26.13(b)).

C. Bidders are required to document sufficient DBE participation to meet these goals or, alternatively, document adequate good faith efforts to do so, as provided for in 49 CFR 26.53. Award of this contract is conditioned on submission of the following concurrent with and accompanying sealed bid concurrent with and accompanying an initial proposal prior to award:

1. The names and addresses of DBE firms that will participate in this contract;
2. A description of the work each DBE will perform;
3. The dollar amount of the participation of each DBE firm participating;
4. Written documentation of the bidder's commitment to use a DBE subcontractor whose participation it submits to meet the contract goal;
5. Written confirmation from the DBE that it is participating in the contract as provided in the prime contractor's commitment; and
6. If the contract goal is not met, evidence of good faith efforts to do so.

Bidders must present the information required above as a matter of responsiveness with initial proposals prior to contract award] (*see* 49 CFR 26.53(3)).

The successful bidder will be required to report its DBE participation obtained through race-neutral means throughout the period of performance.

D. Contractor is required to pay its subcontractors performing work related to this contract for satisfactory performance of that work no later than 7 days after the contractor's receipt of payment for that work from the Omnitrans. In addition, Contractor is required to return any retainage payments to those subcontractors within 30 days after the subcontractor's work related to his contract is satisfactorily completed.

E. Contractor must promptly notify Omnitrans whenever a DBE subcontractor performing work related to this contract is terminated or fails to complete its work, and must make good faith efforts to engage another DBE subcontractor to perform at least the same amount of work. Contractor may not terminate any DBE subcontractor and perform that work through its own forces or those of an affiliate without prior written consent of Omnitrans.

RR-20
ADA ACCESS

A. **Applicability**

This Article applies to federally funded Architect & Engineer, Operations/Management, Rolling Stock Purchase, and Construction contracts

B. **Access Requirements for Persons with Disabilities**

Contractor shall comply with:

1. The requirements of 49 U.S.C. § 5301(d), which states the Federal policy that elderly persons and persons with disabilities have the same right as other persons to use mass transportation service and facilities, and that special efforts shall be made in planning and designing those services and facilities to implement that policy;

2. All applicable requirements of section 504 of the Rehabilitation Act of 1973, as amended, 29 U.S.C. § 794, which prohibits discrimination on the basis of handicaps;

3. The Americans with Disabilities Act of 1990 (ADA), as amended, 42 U.S.C. § 12101 et seq., which requires that accessible facilities and services be made available to persons with disabilities, including any subsequent amendments to that Act;

4. The Architectural Barriers Act of 1968, as amended, 42 U.S.C. §§ 4151 et seq., which requires that buildings and public accommodations be accessible to persons with disabilities, including any subsequent amendments to that Act; and

5. All applicable requirements of the following regulations and any subsequent amendments thereto:

(1) U.S. DOT regulations, "Transportation Services for Individuals with Disabilities (ADA)," 49 C.F.R. Part 37;

(2) U.S. DOT regulations, "Nondiscrimination on the Basis of Handicap in Programs and Activities Receiving or Benefiting from Federal Financial Assistance," 49 C.F.R. Part 27;

(3) Joint U.S. Architectural and Transportation Barriers Compliance Board (U.S. ATBCB)/U.S. DOT regulations, "Americans With Disabilities (ADA) Accessibility Specifications for Transportation Vehicles," 36 C.F.R. Part 1192 and 49 C.F.R. Part 38;

(4) U.S. DOJ regulations, "Nondiscrimination on the Basis of Disability in State and Local Government Services," 28 C.F.R. Part 35;

(5) U.S. DOJ regulations, "Nondiscrimination on the Basis of Disability by Public Accommodations and in Commercial Facilities," 28 C.F.R. Part 36;

(6) U.S. General Services Administration (U.S. GSA) regulations, "Accommodations for the Physically Handicapped," 41 C.F.R. Subpart 101-19;

(7) U.S. Equal Employment Opportunity Commission, "Regulations to Implement the Equal Employment Provisions of the Americans with Disabilities Act," 29 C.F.R. Part 1630;

(8) U.S. Federal Communications Commission regulations, "Telecommunications Relay Services and Related Customer Premises Equipment for the Hearing and Speech Disabled," 47 C.F.R. Part 64, Subpart F; and

(9) U.S. ATBCB regulations, "Electronic and Information Technology Accessibility Standards," 36 C.F.R. Part 1194; and

(10) FTA regulations, "Transportation for Elderly and Handicapped Persons," 49 C.F.R. Part 609;

(11) Any implementing requirements FTA may issue.

RR-21
ALCOHOL AND DRUG-FREE WORKPLACE PROGRAM *

A. **Applicability**

This Article applies to federally funded contracts for transit operations.

B. **FTA Prevention of Alcohol Misuse and Prohibited Drug Use in Transit Operations Regulations**

Contractor and its Subcontractors shall comply with the FTA anti-drug and alcohol misuse regulations (49 CFR Part 655) and the U.S. Department of Transportation (DOT) Procedures for Transportation Workplace Drug and Alcohol Testing Programs (49 CFR Part 40) to the full extent that they are, by their terms, applicable to Contractor and its Subcontractors. The regulations apply to all "contractors" that have "covered employees" that perform "safety sensitive functions" as those terms are defined in the regulations.

C. **Certificate of Compliance**

The CERTIFICATE OF COMPLIANCE WITH 49 CFR PARTS 655, PREVENTION OF ALCOHOL MISUSE AND PROHIBITED DRUG USE IN TRANSIT, submitted by Contractor prior to award, is incorporated as part of the Contract Documents.

D. **Drug and Alcohol Testing Program**

In the event that any part of the Work under this Contract falls within the scope of 49 CFR Part 655, Contractor, and its Subcontractors (as applicable), shall establish and implement a drug and alcohol testing program that complies with 49 CFR Parts 653 and 654, produce any documentation necessary to establish its compliance with Parts 653 and 654, and permit any authorized representative of the United States Department of Transportation or its operating administrations, the State Oversight Agency of California, or Omnitrans, to inspect the facilities and records associated with the implementation of the drug and alcohol testing program as required under 49 CFR Parts 653 and 654 and review the testing process. Contractor shall annually certify its compliance with Parts 653 and 65. To certify compliance the contractor shall use the "Substance Abuse Certifications" in the "Annual List of Certifications and Assurances for Federal Transit Administration Grants and Cooperative Agreements," which is published annually in the Federal Register.

E. **Alcohol and Drug Free Workplace Program**

In addition to the above, for Work performed on Omnitrans property, Contractor shall provide an Alcohol and Drug-free Workplace Program in accordance with FTA requirements found at http://transit-safety.fta.dot.gov/DrugAndAlcohol/default.asp

RR-22
TRANSIT EMPLOYEE PROTECTIVE ARRANGEMENTS *

A. **Applicability**

Subject to the limitations in Sections B, C, and D, this Article applies if this Contract involves transit operations to be performed by employees of a Contractor recognized by FTA to be a transit operator, and if FTA has determined that it is financed in whole or in part with Federal assistance.

B. **General Transit Employee Protective Requirements**

If FTA has determined that this Contract involves transit operations financed in whole or in part with Federal assistance (other than Federal assistance authorized by 49 U.S.C. § 5310(a)(2) or 49 U.S.C. § 5311), and if the U.S. Secretary of Transportation has determined that the employee protective requirements of 49 U.S.C. § 5333(b) are necessary or appropriate for Omnitrans under this Contract, then Contractor shall perform the transit operations work under the Contract in compliance with terms and conditions, (a) determined by the U.S. Secretary of Labor to meet the employee protective requirements of 49 U.S.C. A 5333(b), and U.S. Department of Labor ("U. S. DOL") guidelines at 29 C.F.R. Part 215, and any amendments thereto, and (b) stated in a U. S. DOL letter of certification to FTA, the date of which is set forth in the applicable Grant Agreement or Cooperative Agreement with Omnitrans, and which is incorporated in the Form of Contract as a Contract Document entitled "U. S. DOL Certification".

C. **Transit Employee Protective Requirements for Projects Authorized by 49 U.S.C. § 5310(a) (2) for Elderly Individuals and Individuals with Disabilities**

If FTA has determined that this Contract involves transit operations financed in whole or in part with Federal assistance authorized by 49 U.S.C. § 5310(a)(2), and if the U.S. Secretary of Transportation has determined or determines in the future that the employee protective requirements of 49 U.S.C. § 5333(b) are necessary or appropriate for Omnitrans under the Contract, Contractor shall perform the Work in compliance with the terms and conditions determined, (a) by the U.S. Secretary of Labor to meet the requirements of 49 U.S.C. § 5333(b), U.S. DOL guidelines at 29 C.F.R. Part 215, and any amendments thereto, and (b) stated in the U.S. DOL's letter of certification to FTA, the date of which is set forth in the applicable Grant Agreement or Cooperative Agreement with Omnitrans, and which is incorporated in the Form of Contract as a Contract Document entitled "U. S. DOL Certification".

D. **Transit Employee Protective Requirements for Projects Authorized by 49 U.S.C. § 5311 in Nonurbanized Areas**

If FTA has determined that this Contract involves transit operations financed in whole or in part with Federal assistance authorized by 49 U.S.C. § 5311, Contractor shall comply

with the terms and conditions of the Special Warranty for the Nonurbanized Area Program agreed to by the U.S. Secretaries of Transportation and Labor, dated May 31, 1979, and the procedures implemented by U.S. DOL or any revision thereto.

E. **Indemnity**

Contractor shall defend, indemnify and hold harmless Omnitrans, and its Board Members, employees and agents from and against all liability, claims, demands actions, costs, judgments, penalties, damages, losses and expenses arising out of or in connection with Contractor's failure to comply with or failure to carry out its responsibilities under all applicable provisions of Sections B, C and D of this Article.

RR-23
BONDING REQUIREMENTS

Applicability to Contracts
For those construction or facility improvement contracts or subcontracts exceeding $100,000, FTA may accept the bonding policy and requirements of the recipient, provided that they meet the minimum requirements for construction contracts as follows:

A. A bid guarantee from each bidder equivalent to ten (10) percent of the bid price. The "bid guarantees" shall consist of a firm commitment and may be in any of the following forms: (a) cash; (b) cashier's check payment to Omnitrans; (c) a certified check payable to the city; or (d) a bidder's bond executed by an admitted surety insurer. Such as a bid bond, certifies check, or other negotiable instrument accompanying a bid as assurance that the bidder will, upon acceptance of his bid, execute such contractual documents as may be required within the time specified.

B. A performance bond on the part of the Contractor for 100 percent of the contract price. A "performance bond" is one executed in connection with a contract to secure fulfillment of all the contractor's obligations under such contract.

C. A payment bond on the part of the Contractor for 100 percent of the contract price. A "payment bond" is one executed in connection with a contract to assure payment, as required by law, of all persons supplying labor and material in the execution of the work provided for in the contract.

RR-24
DAVIS-BACON AND COPELAND ANTI-KICKBACK ACTS

Background and Application
The Davis-Bacon and Copeland Acts are codified at 40 USC 3141, *et seq.* and 18 USC 874. The Acts apply to grantee construction contracts and subcontracts that "at least partly are financed by a loan or grant from the Federal Government." 40 USC 3145(a), 29 CFR 5.2(h), 49 CFR 18.36(i) (5). The Acts apply to any construction contract over $2,000. 40 USC 3142(a), 29 CFR 5.5(a). 'Construction,' for purposes of the Acts, includes "actual construction, alteration and/or

repair, including painting and decorating." 29 CFR 5.5(a). The requirements of both Acts are incorporated into a single clause (*see* 29 CFR 3.11) enumerated at 29 CFR 5.5(a) and reproduced below.

The clause language is drawn directly from 29 CFR 5.5(a) and any deviation from the model clause below should be coordinated with counsel to ensure the Acts' requirements are satisfied.

Clause Language
Davis-Bacon and Copeland Anti-Kickback Acts

(1) **Minimum wages** - (i) All laborers and mechanics employed or working upon the site of the work (or under the United States Housing Act of 1937 or under the Housing Act of 1949 in the construction or development of the project), will be paid unconditionally and not less often than once a week, and without subsequent deduction or rebate on any account (except such payroll deductions as are permitted by regulations issued by the Secretary of Labor under the Copeland Act (29 CFR part 3)), the full amount of wages and bona fide fringe benefits (or cash equivalents thereof) due at time of payment computed at rates not less than those contained in the wage determination of the Secretary of Labor which is attached hereto and made a part hereof, regardless of any contractual relationship which may be alleged to exist between the contractor and such laborers and mechanics.

Contributions made or costs reasonably anticipated for bona fide fringe benefits under section 1(b)(2) of the Davis-Bacon Act on behalf of laborers or mechanics are considered wages paid to such laborers or mechanics, subject to the provisions of paragraph (1)(iv) of this section; also, regular contributions made or costs incurred for more than a weekly period (but not less often than quarterly) under plans, funds, or programs which cover the particular weekly period, are deemed to be constructively made or incurred during such weekly period. Such laborers and mechanics shall be paid the appropriate wage rate and fringe benefits on the wage determination for the classification of work actually performed, without regard to skill, except as provided in 29 CFR Part 5.5(a)(4). Laborers or mechanics performing work in more than one classification may be compensated at the rate specified for each classification for the time actually worked therein: Provided that the employer's payroll records accurately set forth the time spent in each classification in which work is performed. The wage determination (including any additional classifications and wage rates conformed under paragraph (1)(ii) of this section) and the Davis-Bacon poster (WH-1321) shall be posted at all times by the contractor and its subcontractors at the site of the work in a prominent and accessible place where it can be easily seen by the workers.

(ii)(A) The contracting officer shall require that any class of laborers or mechanics, including helpers, which is not listed in the wage determination and which is to be employed under the contract shall be classified in conformance with the wage determination. The contracting officer shall approve an additional classification and wage rate and fringe benefits therefore only when the following criteria have been met:

(1) Except with respect to helpers as defined as 29 CFR 5.2(n)(4), the work to be performed by the classification requested is not performed by a classification in the wage determination; and
(2) The classification is utilized in the area by the construction industry; and

(3) The proposed wage rate, including any bona fide fringe benefits, bears a reasonable relationship to the wage rates contained in the wage determination; and

(4) With respect to helpers as defined in 29 CFR 5.2(n)(4), such a classification prevails in the area in which the work is performed.

(B) If the contractor and the laborers and mechanics to be employed in the classification (if known), or their representatives, and the contracting officer agree on the classification and wage rate (including the amount designated for fringe benefits where appropriate), a report of the action taken shall be sent by the contracting officer to the Administrator of the Wage and Hour Division, Employment Standards Administration, U.S. Department of Labor, Washington, DC 20210. The Administrator, or an authorized representative, will approve, modify, or disapprove every additional classification action within 30 days of receipt and so advise the contracting officer or will notify the contracting officer within the 30-day period that additional time is necessary.

(C) In the event the contractor, the laborers or mechanics to be employed in the classification or their representatives, and the contracting officer do not agree on the proposed classification and wage rate (including the amount designated for fringe benefits, where appropriate), the contracting officer shall refer the questions, including the views of all interested parties and the recommendation of the contracting officer, to the Administrator for determination. The Administrator, or an authorized representative, will issue a determination within 30 days of receipt and so advise the contracting officer or will notify the contracting officer within the 30-day period that additional time is necessary.

(D) The wage rate (including fringe benefits where appropriate) determined pursuant to paragraphs (a)(1)(ii) (B) or (C) of this section, shall be paid to all workers performing work in the classification under this contract from the first day on which work is performed in the classification.

(iii) Whenever the minimum wage rate prescribed in the contract for a class of laborers or mechanics includes a fringe benefit which is not expressed as an hourly rate, the contractor shall either pay the benefit as stated in the wage determination or shall pay another bona fide fringe benefit or an hourly cash equivalent thereof.

(iv) If the contractor does not make payments to a trustee or other third person, the contractor may consider as part of the wages of any laborer or mechanic the amount of any costs reasonably anticipated in providing bona fide fringe benefits under a plan or program, Provided, That the Secretary of Labor has found, upon the written request of the contractor, that the applicable standards of the Davis-Bacon Act have been met. The Secretary of Labor may require the contractor to set aside in a separate account assets for the meeting of obligations under the plan or program.

(v)(A) The contracting officer shall require that any class of laborers or mechanics which is not listed in the wage determination and which is to be employed under the contract shall be classified in conformance with the wage determination. The contracting officer shall approve an additional classification and wage rate and fringe benefits only when the following criteria have been met:

(1) The work to be performed by the classification requested is not performed by a classification in the wage determination; and

(2) The classification is utilized in the area by the construction industry; and

(3) The proposed wage rate, including any bona fide fringe benefits, bears a reasonable relationship to the wage rates contained in the wage determination.

(B) If the contractor and the laborers and mechanics to be employed in the classification (if known), or their representatives, and the contracting officer agree on the classification and wage rate (including the amount designated for fringe benefits where appropriate), a report of the action taken shall be sent by the contracting officer to the Administrator of the Wage and Hour Division, Employment Standards Administration, Washington, DC 20210. The Administrator, or an authorized representative, will approve, modify, or disapprove every additional classification action within 30 days of receipt and so advise the contracting officer or will notify the contracting officer within the 30-day period that additional time is necessary.

(C) In the event the contractor, the laborers or mechanics to be employed in the classification or their representatives, and the contracting officer do not agree on the proposed classification and wage rate (including the amount designated for fringe benefits, where appropriate), the contracting officer shall refer the questions, including the views of all interested parties and the recommendation of the contracting officer, to the Administrator for determination. The Administrator, or an authorized representative, will issue a determination with 30 days of receipt and so advise the contracting officer or will notify the contracting officer within the 30-day period that additional time is necessary.

(D) The wage rate (including fringe benefits where appropriate) determined pursuant to paragraphs (a) (1) (v) (B) or (C) of this section, shall be paid to all workers performing work in the Classification under this contract from the first day on which work is performed in the classification.

(2) **Withholding** - Omnitrans shall upon its own action or upon written request of an authorized representative of the Department of Labor withhold or cause to be withheld from the contractor under this contract or any other Federal contract with the same prime contractor, or any other federally-assisted contract subject to Davis-Bacon prevailing wage requirements, which is held by the same prime contractor, so much of the accrued payments or advances as may be considered necessary to pay laborers and mechanics, including apprentices, trainees, and helpers, employed by the contractor or any subcontractor the full amount of wages required by the contract. In the event of failure to pay any laborer or mechanic, including any apprentice,

trainee, or helper, employed or working on the site of the work (or under the United States Housing Act of 1937 or under the Housing Act of 1949 in the construction or development of the project), all or part of the wages required by the contract, Omnitrans may, after written notice to the contractor, sponsor, applicant, or owner, take such action as may be necessary to cause the suspension of any further payment, advance, or guarantee of funds until such violations have ceased.

(3) **Payrolls and basic records** - (i) Payrolls and basic records relating thereto shall be maintained by the contractor during the course of the work and preserved for a period of three years thereafter for all laborers and mechanics working at the site of the work (or under the United States Housing Act of 1937, or under the Housing Act of 1949, in the construction or development of the project). Such records shall contain the name, address, and social security number of each such worker, his or her correct classification, hourly rates of wages paid (including rates of contributions or costs anticipated for bona fide fringe benefits or cash equivalents thereof of the types described in section 1(b) (2) (B) of the Davis-Bacon Act), daily and weekly number of hours worked, deductions made and actual wages paid. Whenever the Secretary of Labor has found under 29 CFR 5.5(a)(1)(iv) that the wages of any laborer or mechanic include the amount of any costs reasonably anticipated in providing benefits under a plan or program described in section 1(b)(2)(B) of the Davis-Bacon Act, the contractor shall maintain records which show that the commitment to provide such benefits is enforceable, that the plan or program is financially responsible, and that the plan or program has been communicated in writing to the laborers or mechanics affected, and records which show the costs anticipated or the actual cost incurred in providing such benefits. Contractors employing apprentices or trainees under approved programs shall maintain written evidence of the registration of apprenticeship programs and certification of trainee programs, the registration of the apprentices and trainees, and the ratios and wage rates prescribed in the applicable programs.

(ii)(A) The contractor shall submit weekly for each week in which any contract work is performed a copy of all payrolls to the Omnitrans for transmission to the Federal Transit Administration. The payrolls submitted shall set out accurately and completely all of the information required to be maintained under section 5.5(a) (3) (i) of Regulations, 29 CFR part 5. This information may be submitted in any form desired. Optional Form WH-347 is available for this purpose and may be purchased from the Superintendent of Documents (Federal Stock Number 029-005-00014-1), U.S. Government Printing Office, Washington, DC 20402. The prime contractor is responsible for the submission of copies of payrolls by all subcontractors.

(B) Each payroll submitted shall be accompanied by a "Statement of Compliance," signed by the contractor or subcontractor or his or her agent who pays or supervises the payment of the persons employed under the contract and shall certify the following:

(1) That the payroll for the payroll period contains the information required to be maintained under section 5.5(a)(3)(i) of Regulations, 29 CFR part 5 and that such information is correct and complete;

(2) That each laborer or mechanic (including each helper, apprentice, and trainee) employed on the contract during the payroll period has been paid the full weekly wages earned, without

rebate, either directly or indirectly, and that no deductions have been made either directly or indirectly from the full wages earned, other than permissible deductions as set forth in Regulations, 29 CFR part 3;

(3) That each laborer or mechanic has been paid not less than the applicable wage rates and fringe benefits or cash equivalents for the classification of work performed, as specified in the applicable wage determination incorporated into the contract.

(C) The weekly submission of a properly executed certification set forth on the reverse side of Optional Form WH-347 shall satisfy the requirement for submission of the "Statement of Compliance" required by paragraph (a)(3)(ii)(B) of this section.

(D) The falsification of any of the above certifications may subject the contractor or subcontractor to civil or criminal prosecution under section 1001 of title 18 and section 231 of title 31 of the United States Code.

(iii) The contractor or subcontractor shall make the records required under paragraph (a)(3)(i) of this section available for inspection, copying, or transcription by authorized representatives of the Federal Transit Administration or the Department of Labor, and shall permit such representatives to interview employees during working hours on the job. If the contractor or subcontractor fails to submit the required records or to make them available, the Federal agency may, after written notice to the contractor, sponsor, applicant, or owner, take such action as may be necessary to cause the suspension of any further payment, advance, or guarantee of funds. Furthermore, failure to submit the required records upon request or to make such records available may be grounds for debarment action pursuant to 29 CFR 5.12.

(4) **Apprentices and trainees** - (i) Apprentices - Apprentices will be permitted to work at less than the predetermined rate for the work they performed when they are employed pursuant to and individually registered in a bona fide apprenticeship program registered with the U.S. Department of Labor, Employment and Training Administration, Bureau of Apprenticeship and Training, or with a State Apprenticeship Agency recognized by the Bureau, or if a person is employed in his or her first 90 days of probationary employment as an apprentice in such an apprenticeship program, who is not individually registered in the program, but who has been certified by the Bureau of Apprenticeship and Training or a State Apprenticeship Agency (where appropriate) to be eligible for probationary employment as an apprentice. The allowable ratio of apprentices to journeymen on the job site in any craft classification shall not be greater than the ratio permitted to the contractor as to the entire work force under the registered program. Any worker listed on a payroll at an apprentice wage rate, who is not registered or otherwise employed as stated above, shall be paid not less than the applicable wage rate on the wage determination for the classification of work actually performed. In addition, any apprentice performing work on the job site in excess of the ratio permitted under the registered program shall be paid not less than the applicable wage rate on the wage determination for the work actually performed. Where a contractor is performing construction on a project in a locality other than that in which its program is registered, the ratios and wage rates (expressed in percentages of the journeyman's hourly rate) specified in the contractor's or subcontractors registered program shall be observed. Every apprentice must be paid at not less than the rate

specified in the registered program for the apprentice's level of progress, expressed as a percentage of the journeymen hourly rate specified in the applicable wage determination. Apprentices shall be paid fringe benefits in accordance with the provisions of the apprenticeship program. If the apprenticeship program does not specify fringe benefits, apprentices must be paid the full amount of fringe benefits listed on the wage determination for the applicable classification. If the Administrator of the Wage and Hour Division of the U.S. Department of Labor determines that a different practice prevails for the applicable apprentice classification, fringes shall be paid in accordance with that determination. In the event the Bureau of Apprenticeship and Training, or a State Apprenticeship Agency recognized by the Bureau, withdraws approval of an apprenticeship program, the contractor will no longer be permitted to utilize apprentices at less than the applicable predetermined rate for the work performed until an acceptable program is approved.

(ii) Trainees - Except as provided in 29 CFR 5.16, trainees will not be permitted to work at less than the predetermined rate for the work performed unless they are employed pursuant to and individually registered in a program which has received prior approval, evidenced by formal certification by the U.S. Department of Labor, Employment and Training Administration. The ratio of trainees to journeymen on the job site shall not be greater than permitted under the plan approved by the Employment and Training Administration. Every trainee must be paid at not less than the rate specified in the approved program for the trainee's level of progress, expressed as a percentage of the journeyman hourly rate specified in the applicable wage determination. Trainees shall be paid fringe benefits in accordance with the provisions of the trainee program. If the trainee program does not mention fringe benefits, trainees shall be paid the full amount of fringe benefits listed on the wage determination unless the Administrator of the Wage and Hour Division determines that there is an apprenticeship program associated with the corresponding journeyman wage rate on the wage determination which provides for less than full fringe benefits for apprentices. Any employee listed on the payroll at a trainee rate that is not registered and participating in a training plan approved by the Employment and Training Administration shall be paid not less than the applicable wage rate on the wage determination for the classification of work actually performed. In addition, any trainee performing work on the job site in excess of the ratio permitted under the registered program shall be paid not less than the applicable wage rate on the wage determination for the work actually performed. In the event the Employment and Training Administration withdraws approval of a training program, the contractor will no longer be permitted to utilize trainees at less than the applicable predetermined rate for the work performed until an acceptable program is approved.

(iii) Equal employment opportunity - The utilization of apprentices, trainees and journeymen under this part shall be in conformity with the equal employment opportunity requirements of Executive Order 11246, as amended and 29 CFR part 30.

(5) **Compliance with Copeland Act requirements** - The contractor shall comply with the requirements of 29 CFR part 3, which are incorporated by reference in this contract.

(6) **Subcontracts** - The contractor or subcontractor shall insert in any subcontracts the clauses contained in 29 CFR 5.5(a)(1) through (10) and such other clauses as the Federal Transit Administration may by appropriate instructions require, and also a clause requiring the

subcontractors to include these clauses in any lower tier subcontracts. The prime contractor shall be responsible for the compliance by any subcontractor or lower tier subcontractor with all the contract clauses in 29 CFR 5.5.

(7) **Contract termination: debarment** - A breach of the contract clauses in 29 CFR 5.5 may be grounds for termination of the contract, and for debarment as a contractor and a subcontractor as provided in 29 CFR 5.12.

(8) **Compliance with Davis-Bacon and Related Act requirements** - All rulings and interpretations of the Davis-Bacon and Related Acts contained in 29 CFR parts 1, 3, and 5 are herein incorporated by reference in this contract.

(9) **Disputes concerning labor standards** - Disputes arising out of the labor standards provisions of this contract shall not be subject to the general disputes clause of this contract. Such disputes shall be resolved in accordance with the procedures of the Department of Labor set forth in 29 CFR parts 5, 6, and 7. Disputes within the meaning of this clause include disputes between the contractor (or any of its subcontractors) and the contracting agency, the U.S. Department of Labor, or the employees or their representatives.

(10) **Certification of eligibility** - (i) By entering into this contract, the contractor certifies that neither it (nor he or she) nor any person or firm who has an interest in the contractor's firm is a person or firm ineligible to be awarded Government contracts by virtue of section 3(a) of the Davis-Bacon Act or 29 CFR 5.12(a)(1).

(ii) No part of this contract shall be subcontracted to any person or firm ineligible for award of a Government contract by virtue of section 3(a) of the Davis-Bacon Act or 29 CFR 5.12(a)(1).

(iii) The penalty for making false statements is prescribed in the U.S. Criminal Code, 18 U.S.C. 1001.

RR-25
PRIVACY ACT - 5 U.S.C. 552

Applicability to Contracts

When a grantee maintains files on drug and alcohol enforcement activities for FTA, and those files are organized so that information could be retrieved by personal identifier, the Privacy Act requirements apply to all contracts.

Flow Down
The Federal Privacy Act requirements flow down to each third party contractor and their contracts at every tier.

Model Clause/Language
The text of the following clause has not been mandated by statute or specific regulation, but has been developed by FTA.

Contracts Involving Federal Privacy Act Requirements - The following requirements apply to the Contractor and its employees that administer any system of records on behalf of the Federal Government under any contract:

(1) The Contractor agrees to comply with, and assures the compliance of its employees with, the information restrictions and other applicable requirements of the Privacy Act of 1974,

5 U.S.C. § 552a. Among other things, the Contractor agrees to obtain the express consent of the Federal Government before the Contractor or its employees operate a system of records on behalf of the Federal Government. The Contractor understands that the requirements of the Privacy Act, including the civil and criminal penalties for violation of that Act, apply to those individuals involved, and that failure to comply with the terms of the Privacy Act may result in termination of the underlying contract.

(2) The Contractor also agrees to include these requirements in each subcontract to administer any system of records on behalf of the Federal Government financed in whole or in part with Federal assistance provided by FTA.

RR- 26
TERMINATION 49 U.S.C. Part 18 FTA Circular 4220.1F

Applicability to Contracts
All contracts (with the exception of contracts with nonprofit organizations and institutions of higher education,) in excess of $10,000 shall contain suitable provisions for termination by the grantee including the manner by which it will be effected and the basis for settlement. (For contracts with nonprofit organizations and institutions of higher education the threshold is $100,000.) In addition, such contracts shall describe conditions under which the contract may be terminated for default as well as conditions where the contract may be terminated because of circumstances beyond the control of the contractor.

Flow Down
The termination requirements flow down to all contracts in excess of $10,000, with the exception of contracts with nonprofit organizations and institutions of higher learning.

a. **Termination for Convenience (General Provision)** Omnitrans may terminate this contract, in whole or in part, at any time by written notice to the Contractor when it is in the Government's best interest. The Contractor shall be paid its costs, including contract close-out costs, and profit on work performed up to the time of termination. The Contractor shall promptly submit its termination claim to Omnitrans to be paid the Contractor. If the Contractor has any property in its possession belonging to the Omnitrans, the Contractor will account for the same, and dispose of it in the manner the Omnitrans directs.

b. **Opportunity to Cure (General Provision)** Omnitrans in its sole discretion may, in the case of a termination for breach or default, allow the Contractor an

appropriately short period of time in which to cure the defect. In such case, the notice of termination will state the time period in which cure is permitted and other appropriate conditions

If Contractor fails to remedy to Omnitrans' satisfaction the breach or default of any of the terms, covenants, or conditions of this Contract within ten (10) days after receipt by Contractor of written notice from Omnitrans setting forth the nature of said breach or default, Omnitrans shall have the right to terminate the Contract without any further obligation to Contractor. Any such termination for default shall not in any way operate to preclude Omnitrans from also pursuing all available remedies against Contractor and its sureties for said breach or default.

c. **Waiver of Remedies for any Breach** In the event that Omnitrans elects to waive its remedies for any breach by Contractor of any covenant, term or condition of this Contract, such waiver by Omnitrans shall not limit Omnitrans remedies for any succeeding breach of that or of any other term, covenant, or condition of this Contract.

d. **Termination for Default (Construction)** If the Contractor refuses or fails to prosecute the work or any separable part, with the diligence that will insure its completion within the time specified in this contract or any extension or fails to complete the work within this time, or if the Contractor fails to comply with any other provisions of this contract, Omnitrans may terminate this contract for default. Omnitrans shall terminate by delivering to the Contractor a Notice of Termination specifying the nature of the default. In this event, Omnitrans may take over the work and compete it by contract or otherwise, and may take possession of and use any materials, appliances, and plant on the work site necessary for completing the work. The Contractor and its sureties shall be liable for any damage to Omnitrans resulting from the Contractor's refusal or failure to complete the work within specified time, whether or not the Contractor's right to proceed with the work is terminated. This liability includes any increased costs incurred by the Omnitrans in completing the work.

The Contractor's right to proceed shall not be terminated nor the Contractor charged with damages under this clause if-

1. The delay in completing the work arises from unforeseeable causes beyond the control and without the fault or negligence of the Contractor. Examples of such causes include: acts of God, acts of the Recipient, acts of another Contractor in the performance of a contract with the Recipient, epidemics, quarantine restrictions, strikes, freight embargoes; and

2. The contractor, within [10] days from the beginning of any delay, notifies Omnitrans in writing of the causes of delay. If in the judgment of Omnitrans, the delay is excusable, the time for completing the work shall be extended. The

judgment of Omnitrans shall be final and conclusive on the parties, but subject to appeal under the Disputes clauses.

If, after termination of the Contractor's right to proceed, it is determined that the Contractor was not in default, or that the delay was excusable, the rights and obligations of the parties will be the same as if the termination had been issued for the convenience of Omnitrans.

RR – 27
SEISMIC SAFETY REQUIREMENTS 42 U.S.C. 7701 et seq. 49 CFR Part 41

Applicability to Contracts

The Seismic Safety requirements apply only to contracts for the construction of new buildings or additions to existing buildings.

Flow Down
The Seismic Safety requirements flow down from FTA recipients and subrecipients to first tier contractors to assure compliance, with the applicable building standards for Seismic Safety, including the work performed by all subcontractors.

Model Clauses/Language
The regulations do not provide suggested language for third-party contract clauses. The following language has been developed by FTA.

Seismic Safety - The contractor agrees that any new building or addition to an existing building will be designed and constructed in accordance with the standards for Seismic Safety required in Department of Transportation Seismic Safety Regulations 49 CFR Part 41 and will certify to compliance to the extent required by the regulation. The contractor also agrees to ensure that all work performed under this contract including work performed by a subcontractor is in compliance with the standards required by the Seismic Safety Regulations and the certification of compliance issued on the project.

RR-28
BREACHES AND DISPUTE RESOLUTION 49 CFR Part 18 FTA Circular 4220.1F

Applicability to Contracts
All contracts in excess of $100,000 shall contain provisions or conditions which will allow for administrative, contractual, or legal remedies in instances where contractors violate or breach contract terms, and provide for such sanctions and penalties as may be appropriate. This may include provisions for bonding, penalties for late or inadequate performance, retained earnings, liquidated damages or other appropriate measures.

Flow Down
The Breaches and Dispute Resolutions requirements flow down to all tiers.

Disputes - Disputes arising in the performance of this Contract which are not resolved by agreement of the parties shall be decided in writing by the Omnitrans. This decision shall be final and conclusive unless within ten (10) days from the date of receipt of its copy, the Contractor mails or otherwise furnishes a written appeal to Omnitrans Construction Manager. In connection with any such appeal, the Contractor shall be afforded an opportunity to be heard and to offer evidence in support of its position. The decision of Omnitrans Project Manager shall be binding upon the Contractor and the Contractor shall abide be the decision.

Performance During Dispute - Unless otherwise directed by Omnitrans, Contractor shall continue performance under this Contract while matters in dispute are being resolved.

Claims for Damages - Should either party to the Contract suffer injury or damage to person or property because of any act or omission of the party or of any of his employees, agents or others for whose acts he is legally liable, a claim for damages therefore shall be made in writing to such other party within a reasonable time after the first observance of such injury of damage.

Remedies - Unless this contract provides otherwise, all claims, counterclaims, disputes and other matters in question between Omnitrans and the Contractor arising out of or relating to this agreement or its breach will be decided by arbitration if the parties mutually agree, or in a court of competent jurisdiction within the State in which Omnitrans is located.

Rights and Remedies - The duties and obligations imposed by the Contract Documents and the rights and remedies available thereunder shall be in addition to and not a limitation of any duties, obligations, rights and remedies otherwise imposed or available by law. No action or failure to act by Omnitrans, or Contractor shall constitute a waiver of any right or duty afforded any of them under the Contract, nor shall any such action or failure to act constitute an approval of or acquiescence in any breach thereunder, except as may be specifically agreed in writing.

RR-29
VETERANS PREFERENCE

Veterans Employment. Contractors working on a capital project funded using FTA assistance shall give a hiring preference, to the extent practicable, to veterans (as defined in section 2108 of title 5) who have the requisite skills and abilities to perform the construction work required under the contract. This subsection shall not be understood, construed or enforced in any manner that would require an employer to give preference to any veteran over any equally qualified applicant who is a member of any racial or ethnic minority, female, an individual with a disability, or former employee.

END OF REGULATORY REQUIREMENTS

ATTACHMENT "C"

SAN BERNARDINO TRANSIT CENTER EMERGENCY GENERATOR & LANDSCAPE MODIFICATIONS PROJECT

SPECIAL PROVISIONS

ATTACHMENT "C"

Specifications

Volume 1

Divisions 0-32

San Bernardino Transit Center (SBTC) EMERGENCY GENERATOR/LANDSCAPE MODIFICATIONS

Construction Documents

Conformance Specifications

HDR Contract No. 181207

August 8, 2016

Owner

San Bernardino Associated Governments

OMNITRANS

Architect/Engineer

HDR, Inc

801 S. Grand Avenue

Suite 500

Los Angeles, Ca 90017-4633

Table of Contents – SBTC Generator/Landscape
PERMIT SET

SPECIAL CONDITIONS

DIVISION 01 - GENERAL REQUIREMENTS

01 11 13	WORK COVERED BY THE CONTRACT DOCUMENTS
01 11 15	DEFINITION OF TERMS AND REFERENCE STANDARDS
01 14 00	WORK RESTRICTIONS
01 14 19	COORDINATION WITH UTILITIES
01 21 00	ALLOWANCES
01 22 00	UNIT PRICES
01 22 05	LUMP SUM PRICES
01 23 50	TIME RELATED OVERHEAD
01 24 13	VALUE ENGINEERING CHANGE PROPOSALS (VECP)
01 25 00	SUBSTITUTION PROCEDURES
01 26 14	REQUEST FOR INFORMATION
01 29 73	SCHEDULE OF VALUES
01 31 00	PROJECT MANAGEMENT AND COORDINATION
01 31 99	CONTRACT TIME
01 32 15	CONSTRUCTION PROJECT SCHEDULE (SMALL PROJECTS)
01 33 00	SUBMITTAL PROCEDURES
01 35 23	SITE SAFETY REQUIREMENTS
01 35 44	ENVIRONMENTAL SAFETY AND HEALTH PROGRAM
01 40 00	QUALITY REQUIREMENTS
01 50 00	TEMPORARY FACILITIES AND CONTROLS
01 55 26	MAINTENANCE AND PROTECTION OF TRAFFIC
01 56 37	WORK SITE SECURITY REQUIREMENTS
01 57 19	TEMPORARY ENVIRONMENTAL CONTROLS
01 60 00	PRODUCT REQUIREMENTS
01 71 23	FIELD ENGINEERING
01 74 19	CONSTRUCTION WASTE MANAGEMENT AND DISPOSAL
01 77 00	SUBSTANTIAL COMPLETION
01 77 19	PROJECT CLOSEOUT
01 78 23	OPERATION AND MAINTENANCE DATA
01 78 36	WARRANTIES AND GUARANTEES
01 78 39	PROJECT RECORD DOCUMENTS
01 79 00	DEMONSTRATION AND TRAINING
01 91 13	GENERAL COMMISSIONING REQUIREMENTS

DIVISION 02 - EXISTING CONDITIONS

02 41 00	DEMOLITION

DIVISION 03 - CONCRETE

03 08 13	CONCRETE TESTING AND EVALUATION - OWNER
03 11 00	CONCRETE FORMWORK
03 18 13	CONCRETE SURFACE SEALER
03 21 00	REINFORCING STEEL
03 31 00	CONCRETE MATERIALS AND PROPORTIONING

03 31 10 CONCRETE MIXING, PLACING, JOINTING AND CURING
03 33 00 ARCHITECTURAL CAST-IN-PLACE (ACIP) CONCRETE
03 35 00 CONCRETE FINISHING AND REPAIR OF SURFACE DEFECTS

DIVISION 04 - MASONRY
04 05 10 MASONRY CLEANING

DIVISION 05 – METALS

05 05 05 GALVANIC CORROSION PROTECTION
05 12 10 STRUCTURAL STEEL
05 12 13 ARCHITECTURALLY EXPOSED STRUCTURAL STEEL
05 50 10 MISCELLANEOUS METAL FABRICATIONS

DIVISION 08 - OPENINGS

08 71 00 DOOR HARDWARE

DIVISION 09 - FINISHES

09 91 13 EXTERIOR PAINTING
09 96 23 GRAFFITI RESISTANT COATINGS

DIVISION 10 - SPECIALTIES

10 14 03 IDENTIFICATION DEVICES - EXTERIOR
10 44 00 FIRE PROTECTION SPECIALTIES

DIVISION 26 – ELECTRICAL

26 00 10 ELECTRICAL GENERAL REQUIREMENTS
26 05 19 LOW VOLTAGE ELECTRICAL POWER CONDUCTORS AND CABLES
26 05 26 GROUNDING AND BONDING FOR ELECTRICAL SYSTEMS
26 05 33 CONDUITS
26 05 34 BOXES
26 05 35 SURFACE METAL RACEWAYS AND WIREWAYS
26 08 16 COMMISIONING OF ELECTRICAL SYSTEMS SUPPORT
26 27 26 WIRING DEVICES
26 32 14 ENGINE GENERATOR – DIESEL
26 36 00 TRANSFER SWITCHES
26 56 00 EXTERIOR LIGHTING

DIVISION 28 - ELECTRONIC SAFETY AND SECURITY

28 13 13 CARD ACCESS CONTROL SYSTEM
28 23 00 VIDEO SURVEILLANCE (FIXED)

DIVISION 31 - EARTHWORK

31 11 00 SITE PREPARATION
31 11 50 DEMOLITION, CUTTING AND PATCHING
31 22 00 SITE EXCAVATION
31 23 33 TRENCHING, BACKFILLING AND COMPACTING FOR UTILITIES

DIVISION 32 - EXTERIOR IMPROVEMENTS

32 13 13	CONCRETE PAVING
32 13 23	SPECIAL CONCRETE FINISHES
32 15 00	DECOMPOSED GRANITE PAVING
32 22 19	TOPSOILING
32 80 00	IRRIGATION SYSTEM
32 93 00	PLANTS AND PLANTING

Special Provisions
Table of Contents

1 ABBREVIATIONS 1
2 DEFINITIONS 1
3 SITE ACCESS 9
4 COMMENCEMENT OF THE WORK 9
5 ENVIRONMENTAL 10
6 PERMITS AND LICENSES 11
7 RAIL AND BUS SERVICE INTERRUPTION & DISRUPTION 11
8 CONTRACTOR'S MEDIA & PUBLIC INTERACTION 11
9 CHANGES 12
10 COMPENSATION (CONTRACT ARTICLE 4) 16

1 ABBREVIATIONS

BNSF	Burlington Northern Santa Fe Railway Company
SANBAG	San Bernardino Associated Governments
SCAQMD	South Coast Air Quality Management District
SCRRA	Southern California Regional Rail Authority (Metrolink)

2 DEFINITIONS

The following definitions supplement other definitions provided throughout the Contract Documents:

Application for Final Payment	Contractor's application to SANBAG for final payment submitted after SANBAG issues a Certificate of Final Acceptance
Authorized Representative	A person, persons, or firm specifically authorized and empowered to act for or in place of a named person or entity.
Beneficial Occupancy	The taking possession of all or a portion of the Work by SANBAG for its use or occupancy on other than a temporary or emergency basis
Board President	The President of the SANBAG Board of Directors
Certificate of Final Acceptance	Written acceptance of the Work by SANBAG as complete.
Change	An alteration, modification, or addition to the Contract that may result in an adjustment to the Contract Price or the Contract Time.
Change Notice (CN)	A document issued by SANBAG to the Contractor detailing a proposed Change to the Contract. After negotiation, a Change Order may result from a Change Notice.
Change Order (CO)	A Change Order (CO) is a written document issued by SANBAG to the Contractor and signed by SANBAG and the Contractor modifying the Contract to incorporate a Change.
Changed Work	The scope of work included in a Change Notice, Unilateral Change Notice, or Change Order.
City	The City of San Bernardino and all associated entities thereof, including but not limited to, San Bernardino Municipal Water

	Department (SBMWD).
City Inspector	Designated employee or agent of the City who is charged with responsibility for code and other municipal inspections.
Claim	A written demand by one of the contracting parties submitted in accordance with the Contract provisions.
Construction Equipment	Contractor-furnished equipment required to perform the Work.
Construction Management Consultant	A consultant retained by SANBAG to provide construction management support, field engineering, testing and inspection, and other services for the Project. All communication with SANBAG will be through the Resident Engineer (see Resident Engineer).
Construction Staging Area	Property available for use by the Contractor during the construction period for the purpose of storing materials and construction equipment, and for coordinating the Work.
Contract	Written contract executed by SANBAG and the Contractor, which sets forth the rights and obligations of the parties in connection with the Work, and which includes the Contract Documents.
Contract Administrator	The Contracting Officer or his/her Authorized Representative who is authorized to administer the Contract on behalf of SANBAG.
Contract Documents	All documents, Contract Plans, manuals, Specifications or modifications that collectively constitute the Contract.
Contract Plans	That part of the Contract showing construction details and the locations, character, dimensions, and details of the Work. Also referred to as Plans.
Contract Price	The Contract Price constitutes the total compensation, subject to authorized adjustments, payable to the Contractor for performance of the Work.
Contract Time	The Contract Time is the original duration of the Contract in calendar days from LNTP to Substantial Completion, plus approved Change Order adjustments.
Contracting Officer	SANBAG's Board President or his/her Authorized Representative with authority to execute Contracts and

	Contract modifications on behalf of SANBAG.
Contractor	The individual, firm, partnership, corporation, joint venture, or combination thereof that has entered into the Contract with SANBAG.
Cost of Work	The sum of all direct and indirect costs that are necessarily incurred and paid by the Contractor in performance of the Work.
Days	Unless otherwise stated, "Days" shall mean calendar days. When a required submittal due date falls on a SANBAG non-business day, submittal shall be on the next business day.
Employee In Charge (EIC)	Representative of the operating railroad designated to coordinate on track safety as called for in CFR 49.214.
Engineering Consultant	An engineering consultant retained by SANBAG to provide design, engineering, and other services for the Project.
Ethics Policy	A SANBAG policy that governs the conduct of all employees, consultants/contractors, and Board members/alternates of SANBAG and any of its organizational units.
Five County Area	The area within the borders of the five counties constituting the SCRRA.
Flag Protection	The provision of a safe working environment on the railroad right-of-way in conformance with Federal Railroad Administration (FRA) and General Code of Operating Rules (GCOR).
General Code of Operating Rules for Maintenance of Way	Set of rules, supplements and bulleting thereto, which governs activity on and near SCRRA's railroad tracks.
Inspector	SANBAG or its Authorized Representative or other governmental agencies, railroad operators, utilities, or interested parties assigned to make inspections or tests of the Work performed or being furnished by the Contractor.
Installation, Install	Completing assembly, erecting, or connecting materials, parts, components, supplies, and related equipment specified or required for the completion of the Work.
Limits of Work	Boundary within which the onsite elements of the Work will be performed, except utility and drainage Work in local

	streets and on private property.
Milestone	An established event or occurrence that is associated with the Schedule as defined in the Contract.
Mobilization	The amount paid, as identified in the Schedule of Quantities and Prices, for the Contractor to assemble crews; transport material, equipment, and other resources; arrange for Worksite access; provide flag protection; remove material and equipment; and clean Worksite, which amount will be paid once for each category of Work in the Contract.
Non-Conformance Report (NCR)	Written notice from SANBAG to the Contractor that specific Work is not in conformance with the Contract.
Notice of Award	Written confirmation of an award of a Contract by SANBAG to a successful bidder, stating the amount of the award, the award date, and when the contract will be signed. It may also contain a notice to proceed.
Notice of Termination	Written notice from SANBAG to the Contractor and its surety terminating the Contract, or a portion thereof, either for convenience of SANBAG or for default due to the Contractor's failure to perform its contractual obligations.
Notice to Proceed (NTP)	SANBAG's written authorization to proceed with all Work. NTP will initiate the Period of Performance.
OmniTrans	Local area bus transit agency and who will become the Project operator and owner at the completion and turnover of project.
Payment Bond	A surety bond which guarantees that the Contractor will cover payments of all obligations under the Contract, and which also guarantees against breach of Contract.
Performance Bond	A surety bond, which guarantees that the Contractor will fully perform the Contract, and guarantees against breach of Contract.
Period of Performance	Period of Performance is the duration of Work from the effective date of the Notice to Proceed (NTP) to the certified date of Substantial Completion.
Plans	That part of the Contract showing construction details and the locations, character, dimensions, and details of the Work. Also referred to as Contract Plans.

Product Data	Illustrations, standard schedules, performance charts, instructions, brochures, diagrams, and other information furnished by the Contractor to illustrate a material, product, or system for a portion of the Work.
Project Manager for Contractor	Individual designated and authorized by Contractor in accordance with the Section entitled Contractor's Project Manager, herein.
Project	The Work to be performed pursuant to the Contract Documents.
Project-Specific Specifications	SANBAG specifications that are specific to the Work.
Prompt Payment to Subcontractors	Specific time periods established by law within which the Contractor must pay the undisputed amounts of their subcontractor's progress payments and release withheld retentions.
Railroad Operator(s)	The company with freight operating or commuter operating rights on a specific rail line segment. This includes BNSF, SCRRA, and Amtrak
Reference Codes	Federal, State, or local governmental codes, ordinances, or regulations, or trade organization codes.
Reference Plans	Those plans incorporated by reference in the Contract.
Reference Standards	Authoritative principles, rules, models, and the like, used to determine or establish the acceptability of material, equipment, Work, procedures, or workmanship that are physically located in other documents and are incorporated into the Contract only by reference. The Reference Standards shall have the same force and effect as if their full text were physically incorporated in the Contract.
Regular Work Day	Eight (8) consecutive working hours, allowing up to one non-working hour for lunch and breaks, unless otherwise agreed to by the Contractor and SANBAG.
Regular Work Week	Five (5) working days within a seven (7) day period.
Request for Acceptance of Work	Contractor's request for SANBAG's Acceptance of Work; submitted by Contractor upon its determination that all Work has been completed.

Request for Change (RFC)	A written document submitted by the Contractor to SANBAG, identifying desired revisions to the Contract.
Request for Information (RFI)	A written request to SANBAG from the Contractor requesting clarification of or information on a portion of the Work.
Resident Engineer	An Authorized Representative of SANBAG, with specific and limited authority as described in the Contract.
Safety Representative	Representative of the Contractor designated to act in connection with safety inspections, meeting training, and accident investigations.
SANBAG	San Bernardino Associated Governments (SANBAG), or its successor, or any successor in interest or, where appropriate, its Authorized Representative. SANBAG is a Council of Governments and consists of the following entities: • San Bernardino County Transportation Commission. • San Bernardino County Transportation Authority.
San Bernardino Transit Center (SBTC)	The multimodal transportation center located at the southwest quadrant of Rialto Avenue and E Street, San Bernardino.
Schedule of Quantities and Prices	A comprehensive listing of specific tasks together with a specific unit of measurement and a Unit Price (also known as Bid Pricing Forms).
Schedule of Values	The breakdown of the Contract Price into dollar values relating to specific components of the Work and is used as the basis for reviewing Contractor's applications for payment.
SCRRA	The Southern California Regional Rail Authority (SCRRA) or its successor, or any successor in interest or, where appropriate, its Authorized Representative. SCRRA is also known as the Metrolink System.
Shop Drawings	Original drawings, plans, diagrams, schedules, and other data specifically prepared and submitted to SANBAG by the Contractor or any of its Subcontractors pursuant to the Work, showing in detail the following: • The proposed fabrication and assembly of a

specific portion of the Work; and

- The Installation (form, fit, and attachment details) of a specific portion of the Work

Shop Drawings shall include Product Data, catalogue literature, performance and test data, and other submittals as appropriate.

Site Specific Emergency Action Plan	The emergency action plan shall be in writing, except and shall cover those designated actions employers and employees must take to ensure employee safety from fire and other emergencies.
Site Specific Illness and Injury Prevention Program	The Injury and Illness Prevention Program (IIPP) is a written workplace safety program. Title 8 of the California Code of Regulations (T8CCR) section 3203, requires every employer to develop and implement an effective IIPP. An effective IIPP improves the safety and health in your workplace and reduces costs by good management and employee involvement. The required Site-Specific Injury and Illness Prevention Program elements are: 1. Responsibility 2. Compliance 3. Communication 4. Hazard Assessment 5. Accident/Exposure Investigation 6. Hazard Correction 7. Training and Instruction 8. Recordkeeping
Special Conditions	Modifications, additions, or deletions to specific terms and conditions of the Contract that are exclusive to the Project.
Special Events	Events considered to be those construction activities that constitute exposing the general public to danger, inconvenience, or risk.
Specifications	The directions, provisions, requirements, and descriptions of the Work to be performed pursuant to the Project-Specific Specifications, the Contract Plans, the SCRRA Standard Specifications, the SCRRA Standard Plans, and any other specifications or plans referenced in the Contract.
State	The State of California.
Subcontractor	Any individual, firm, partnership, corporation, joint venture, or combination thereof, other than employees of the

	Contractor, that enters into a Contract with the Contractor to furnish services, labor, equipment, or materials as a portion of the Work. Unless otherwise specified, Subcontractor includes a Subcontractor of any tier, and excludes Suppliers, manufacturers, and distributors.
Substantial Completion	Substantial completion of the Work or the designated portion thereof occurs when SANBAG certifies that the Work is sufficiently complete as set forth in the Contract Documents so that SANBAG may occupy or use the Work, or a designated portion thereof, for the use for which it is intended.
Substitution	A product, service, component, or system that the Contractor requests to use in lieu of that specified in the Contract.
Supplier	Any person, firm, partnership, corporation, joint venture, or combination thereof, other than employees of the Contractor, that furnishes a tangible product or services as a portion of the Work, with services usually limited to delivery or required testing.
Surety	A company whose business is to assume responsibility for the performance or payment obligation of the Contractor.
Unilateral Change Notice (UCN)	A unilateral written directive to the Contractor issued and signed by SANBAG ordering a Change in the Work when, in SANBAG's sole discretion, time constraints make it impractical or impossible to ascertain the total cost of the changes in the Work before Changes in the Work must commence.
Unit Price	The dollar value set by the Contractor in the Schedule of Quantities and Prices for a single, reoccurring item of Work or group of items commonly regarded as a single entity, that is inclusive of all direct and indirect costs and excluding only those costs associated with any other Unit Price.
Value Engineering Change Proposals (VECPs)	A proposal(s) submitted by the Contractor identifying areas or instances in which improvements can be made, in order to avail SANBAG of potential cost savings.
Work	The sum total of productive and operative efforts used to generate the results specified, indicated, or implied in the Contract. Work includes all products, materials, facilities, and improvements as required by the Contract.

Working Plans	Original plans prepared by the Contractor or its Subcontractors or Suppliers, of any tier, illustrating Work required for construction that will not become an integral part of the completed Work. This includes, but is not limited to, plans for temporary structures such as decking, bulkheads, excavation supports, utility support, groundwater control, forming, and falsework.
Work Site	Area within which the onsite portions of the Work will be performed, which is enclosed by the Limit of Work, and immediately surrounding streets or easements (see Contract Plans). It also includes offsite areas used in connection with the performance of the Work.

3 SITE ACCESS

The Work Site will become available at the Notice to Proceed, unless otherwise specified. Contractor shall not use the main bus access lane into the transit center. Access shall be from the driveway off Rialto Avenue which leads to the generator site. All other access requirements shall be requested by the Contractor five calendar days in advance in order to allow coordination and approval from Omnitrans or other entities.

Contractor shall maintain existing pedestrian access at all times. Contractor shall submit a Site-Specific Work Plan (SSWP) for review and approval by SANBAG and Omnitrans describing the overall plan to complete the work. The plan shall include, but not limited to, site access, laydown areas and pedestrian pathways.

Any damage to the driveway, sidewalk, or any other facility made by the Contractor shall be repaired by the Contractor to the satisfaction of SANBAG.

4 COMMENCEMENT OF THE WORK

SANBAG will issue a Notice to Proceed at some time after the execution of the Contract. The Contractor is not authorized to perform any work until the Contractor has received the Notice to Proceed (NTP) from SANBAG. Should the Contractor begin Work in advance of receiving these notices, such Work shall be considered as having been done at the Contractor's own risk. The NTP will initiate Contract Time and will specify the extent of Work that the Contractor is authorized to perform. The NTP will authorize the following activities, which must be completed within 30 calendar days of the NTP date:

1. Obtain permits, right-of-entry permits, and licenses as required for performance of the Work
2. Secure the Work Site and mobilize temporary facilities as necessary to perform Work
3. Attend Pre-Construction Conference as well as progress and coordination meetings

The following submittals must be approved by SANBAG within 30 calendar days of the NTP date:

1. Schedule of Contract Values
2. Baseline Construction Schedule
3. Submittal Schedule
4. Health and Safety Plan
5. Emergency Response and Evacuation Plan
6. Quality Control Plan
7. Storm Water Pollution Protection Plan
8. Construction Waste Management and Disposal Plan
9. Other permits but not limited to City of San Bernardino-issued encroachment, grading, street use and haul route permits.

5 ENVIRONMENTAL

Contractor is required to comply with the following documents:

1. Environmental Compliance

   Transportation and Traffic

   The contractor is required to comply with City of San Bernardino regulations to minimize and reduce construction noise. The contractor shall employ measures to minimize and reduce construction noise. Measures that will be implemented to reduce construction noise to acceptable levels include the following:

   - Comply with local noise regulations and limit construction hours to the extent practicable (i.e., between the hours of 7:00 a.m. and 8:00 p.m.).
   - Use available noise suppression devices and techniques, including:
   - Equipping all internal combustion engine-driven equipment with mufflers, air-inlet silencers, and any other shrouds, shields, or other noise-reducing features that are in good operating condition and appropriate for the equipment (5 to 10 dB reduction possible).
   - Using “quiet” models of air compressors and other stationary noise sources where such technology exists.
   - Using electrically powered equipment instead of pneumatic or internal combustion-powered equipment, where feasible.
   - Using noise-producing signals, including horns, whistles, alarms, and bells, for safety-warning purposes only.
   - Locating stationary noise-generating equipment, construction parking, and maintenance areas as far as reasonable from sensitive receivers adjoining or near the Project Study Area.
   - Prohibiting unnecessary idling of internal combustion engines (i.e., in excess of 5 minutes).

- Placing temporary soundwalls or enclosures around stationary noise-generating equipment when located near noise-sensitive areas (5 to 15 dB reduction possible).
- Ensuring that project-related public address or music systems are not audible at any adjacent receiver.
- Notifying adjacent residents in advance of construction work.

6 PERMITS AND LICENSES

The Contractor shall be fully responsible for identifying and obtaining, at its sole expense, all necessary permits and licenses required unless identified below as SANBAG-provided for the timely prosecution of the Work as required by law.

SANBAG will obtain the following permits without cost to the Contractor:

1. City Permit for Generator and Pad
2. City Permit for Landscaping

Copies of the permits obtained by SANBAG will be provided to the Contractor.

7 RAIL AND BUS SERVICE INTERRUPTION & DISRUPTION

A. The Contractor shall be responsible for damages incurred by SANBAG and OmniTrans for any losses caused by the Contractor. Unauthorized disruptions to service which include delays due to disruption of bus operations.

B. Contractor acknowledges and agrees that it is and will be impracticable and extremely difficult to ascertain and determine the actual amount of damages that SANBAG will sustain; accordingly in the event of such damages, assessments will be levied as prescribed below. The Contractor shall pay said assessments, and further agrees that SANBAG may deduct the amount thereof from any monies due or that may become due to the Contractor under the Contract if the Contractor has not paid within seven (7) days for any damages due SANBAG for the assessments.

C. Contractor agrees to pay SANBAG liquidated damages as follows:

1. SANBAG costs of $1,200/working day.

2. Omnitrans costs of disruption of scheduled bus service of $250/hour.

8 CONTRACTOR'S MEDIA & PUBLIC INTERACTION

The Contractor shall not allow any Project-related publications, copy, photographs or electronic images to be published, displayed on the internet, or used in the Contractor's advertisements or public relations programs without prior written approval from SANBAG.

The Contractor shall immediately refer all inquiries from the news media to SANBAG. All contacts with the media relating to the Project shall be the exclusive duty of SANBAG. If contacted by the news media, the Contractor and all its labor forces, including Sub-Contractors, shall refrain from any communication with the news media and contact the Construction Manager immediately.

In the event of any anticipated evening or weekend work or closures impacting businesses or residents in the vicinity of Contractor's area of work, Contractor's project manager must request SANBAG approval in writing, at least two weeks in advance of scheduled Work if the duration of the closure or disruption is expected to be five working days or less. If the duration of the closure or disruption is expected to be greater than five days, Contractor is required to request SANBAG approval thirty days in advance. Should the Contractor's operations require utility shut-offs, emergency road closures, etc. that could not be anticipated, the Contractor shall immediately notify SANBAG and provide notice to the community or general public as approved by SANBAG.

If the Contractor receives a complaint or a notice of alleged damages from a member of the public or property owner/tenant(s), the Contractor shall, but in no event later than start of the next business day, inform SANBAG of the complaint and what action will be taken to address or alleviate the complaint. All correspondence or communications relating to a complaint, including written notes of oral conversations shall be transmitted to SANBAG within one business day of receipt or transmission by the Contractor.

9 CHANGES

A. SANBAG Directed Changes

1. SANBAG may at any time order additions, deletions, or revisions in the Work (Changes) within the general scope of the Contract. These will be initiated by a Change Notice (CN) and authorized only upon the issuance of a written Change Order (CO) or, in unusual circumstances, by the issuance of a Unilateral Change Notice (UCN). Upon receipt of any CO or UCN, the Contractor shall promptly proceed with execution of the Work.

2. Except as expressly permitted herein, no order, statement, or conduct of SANBAG or anyone purporting to represent SANBAG shall be treated as a Change under this Contract or entitle the Contractor to an adjustment of compensation or time of performance under this Contract. The Contractor may request the initiation of a CO by a Request for Change (RFC). Regardless of how a Change is initiated or authorized, any compensation in money or time for a Change can only be authorized by a written CO or UCN. The Contractor's records pertaining to Changes pursuant to this Section are subject to audit.

3. Changes within the general scope of the Contract may include, but are not limited to, material Changes resulting from any of the following:

    a. Specifications, plans, and designs

b. Method, manner, or timing of the performance of Work
c. SANBAG furnished facilities, equipment, materials, services, or Worksite
d. Contract milestones
e. Value engineering
f. Adding, deleting, or revising Work

4. Change Notice: A Change Notice (CN) does not authorize a Contractor to commence performance of the Changed Work. Nothing in the Contract will be construed to bind SANBAG for acts of its employees and agents that exceed the delegation of their authority. The Contractor shall promptly notify SANBAG in writing when it receives direction, instruction, interpretation, or determination from any source that may lead to or cause any Change in the Work. Such written notification shall be given to SANBAG before the Contractor acts on said direction, instruction, interpretation or determination.

5. Unilateral Change Notice (UCN):

   a. The UCN, issued by SANBAG, shall expressly specify:

      1. The intention to treat such items as Changes;
      2. The kind, character, and limits of the Changes as far as can be ascertained by SANBAG;
      3. The terms under which changes to the Total Contract Amount will be determined; and
      4. Payment provisions.

   b. The UCN shall be executed by SANBAG and transmitted to the Contractor before any Work is started on the items covered thereby. The UCN shall contain a cost limitation that cannot be exceeded without a prior written additional approval from SANBAG. SANBAG and the Contractor shall negotiate the adjustment to the Contract Amount or time of performance and, thereafter, incorporate such into a subsequently issued CO.

6. Change Order (CO)

   a. The CO shall expressly state that the change in compensation, if any, includes all amounts to which the Contractor is entitled as a result of the events giving rise to the Change Order. The execution of a Change Order by both parties shall be deemed final without reservation of rights by either party for all costs and time of performance related to the Change.

   b. For all Change Orders greater than or equal to $200,000, a certification of conflict of interest may be required from the Contractor and all Subcontractors and Suppliers who will perform Work included in the Change Order.

      In the event that the Contractor and SANBAG are unable to agree on the amount of any Change or adjustment to be made for compensation or time, a Change Order may be issued unilaterally by SANBAG, in which case the Contractor may challenge the CO or any aspect of the CO only by strictly following the procedures described in Article C.4 (Contractor's Change Order Proposal) of these Special Conditions. If the Contractor challenges the Change Order, the Contractor shall nonetheless proceed diligently and timely with the Work to be performed under the Contract and the CO.

B. Contractor Requested Changes

The Contractor may request additional compensation or time through a Request for Change (RFC). In order for an RFC to be considered timely, the Contractor must submit a RFC no later than 20 days after the Contractor first became aware, or should have become aware, of the event or occurrence giving rise to such request. Untimely requests are subject to denial by SANBAG regardless of the merits of any RFC. The Contractor is not entitled to any compensation or time extension when an RFC is determined by SANBAG to be untimely. The RFC must specify the particulars of such Change, including relevant dates and circumstances.

Any RFC that is approved by SANBAG will be incorporated into a CN. If the RFC is denied but the Contractor believes its request was timely and has merit, the Contractor shall maintain records in accordance with Contractor's Change Order Proposal paragraph C.4 of this Article.

SANBAG encourages the Contractor to submit Value Engineering Change Proposals (VECPs) whenever it identifies areas or instances in which improvements can be made, in order to avail SANBAG of potential cost savings. The Contractor and SANBAG will share any savings in the manner described in the Project Specific Specifications Section 01 24 13 (Value Engineering Change Proposals (VECP).

C. CONTRACTOR'S CHANGE ORDER PROPOSAL

1. If directed by SANBAG, the Contractor shall submit a Contractor's Cost and Schedule Proposal to SANBAG within 15 working days after receipt of a CN or UCN. The proposal shall detail price and scheduling information showing all of the cost and time ramifications of the additions, deletions, or modifications shown in the CN or UCN. If any prices or other aspects are conditional, such as orders being made by a certain date or the occurrence of a particular event at a specified time, the Contractor shall identify these conditions in its proposal. The components and allowed costs to be used by the Contractor in preparing the proposal shall be those set forth in this Section and shall be presented in such a manner that all cost and schedule information can be easily identified and certified upon request. The submittal shall include current cost or pricing data as described in this Section. Changes involving an item of Work covered by a Contract Unit Price will be priced at the Contract Unit Price, subject to those provisions contained in the Subsection below entitled, "INCREASED OR DECREASED QUANTITIES".

2. If the Contractor does not submit the Contractor's Cost and Schedule Proposal by the required date, SANBAG reserves the right to unilaterally issue a CO utilizing SANBAG's cost estimate. In addition, SANBAG reserves the right to withhold payment on such a unilateral CO if the requested Contractor's Cost and Schedule Proposal is not submitted by the required date.

3. SANBAG, or its Authorized Representatives, may require that the Contractor supply appropriate documentation to support the prices proposed for Changes and may refuse to complete negotiations until satisfactory documentation is submitted. Once a CO is executed, the Contractor's records shall be subject to audit and inspection.

4. The Contractor shall maintain such records as SANBAG deems sufficient to distinguish the direct cost of Changed Work on a UCN from the cost of other operations. When directed by SANBAG, the Contractor shall submit, daily and no later than each subsequent workday, to SANBAG reports of Changed Work on forms approved by SANBAG. The reports shall itemize all costs for labor, materials, and equipment and give the total of costs to date for the Changed Work. For labor, the reports shall include names, hours worked, and rates of pay for all labor classifications

(up to but not including general foreman) directly engaged in the actual performance of the Changed Work.

5. When SANBAG determines that the method of payment for a UCN or Change is to be on a time and material basis, the Contractor shall maintain and segregate cost and pricing data, books, records, documents, and any other accounting evidence sufficient to properly reflect all direct and indirect costs of whatever nature claimed to have been incurred, or anticipated, if not actually incurred.

6. All records and reports shall be made immediately available to SANBAG upon request. The cost of preparing such reports shall be included in the Contractor's overhead compensation. All Changed Work reports shall be signed daily by the Contractor, or its Authorized Representative, and by SANBAG. SANBAG will compare its records with the Contractor's reports, make any necessary adjustments, and determine the costs of Changed Work. Such reports shall be the basis for final payment of the Change.

7. If the Contractor has submitted cost or pricing data in connection with the pricing of any Change to the Contract (unless the pricing was based on adequate price competition, established catalog or market prices of commercial items sold in substantial quantities to the general public, or prices set by law or regulation), SANBAG and other authorized agencies shall have the right to examine and audit books, records, documents, and other data of the Contractor (including computations and projections) related to negotiating, pricing or performing the Change in order to evaluate the accuracy, completeness, and currency of the cost or pricing data.

8. Also subject to audit review by SANBAG, or its Authorized Representatives, shall be the Contractor's Records relating to those items on a progress payment application that relate to (1) Work done under a Unilateral Change Notice; (2) Materials or services not yet incorporated into the Work; and (3) Work done under a Change Order negotiated on a time and materials basis, Unit Price or Lump Sum basis. If the audit indicates that the Contractor has been overpaid under a previous payment application, that overpayment shall be credited against current progress payment applications.

D. CHANGED WORK COMPENSATION

1. Labor Costs

   a. Labor costs shall be based on the prevailing wage scale for each craft or type of work, as well as payroll tax Federal Insurance Contributions Act (FICA), Federal and State unemployment taxes (FUTA and SUTA), and fringe benefits as applicable. Payroll taxes shall be calculated on base wage plus vacation/holiday pay only and not on fringe benefits. Fringe benefits shall be applied to the straight-time component of cost, and shall not be increased for the premium-time component, unless otherwise required by the California Labor Code. Labor costs shall not include costs for assistant superintendents, office personnel, timekeepers, and maintenance mechanics, unless expressly authorized by SANBAG prior to the start of Changed Work. For equipment, the reports shall include size, type, identification number, rental rate, and hours operated and hours idle.

   b. Labor reports shall include names, hours worked, and rates of pay for all classifications up to, but not including, general foreman that are directly engaged in the actual performance of the Changed Work. Labor costs shall not include costs for assistant superintendents, office

personnel, timekeepers, and maintenance mechanics, unless expressly authorized by SANBAG prior to the start of the Changed Work.

2. Material Costs

   a. Material costs shall be the cost of all materials purchased by the Contractor and used in the Changed Work, including normal waste allowance per industry standards. The cost shall also include freight, delivery, unloading, storage, and similar charges. If directed by SANBAG, the Contractor shall obtain up to three material quotations from reputable Suppliers for review by SANBAG prior to issuing a purchase order.

3. Equipment Costs

   a. Equipment rates shall be determined by using the current CALTRANS Equipment Rental Rates and Labor Surcharge. For equipment not included in CALTRANS Equipment Rental Rates and Labor Surcharge, the Contractor shall utilize Rental Rate Blue Book.

4. Administrative Costs

   a. Allowances for job indirect costs, taxes and insurance, overhead and profit applied to actual direct costs for labor, equipment and material shall be commensurate with the degree of difficulty/complexity and administrative burden. The Contractor must include in his cost proposal a breakdown of these administrative costs for evaluation and negotiation. The administrative cost shall not exceed 20% for labor, 15% for equipment and 10% for material, for the contractor/sub-contractor performing the Changed Work. If the contractor/sub-contractor performing the Changed Work is a first or second tier subcontractor, then the prime contractor and first tier subcontractors are allowed up to an additional 5% each for their commissions. If the contractor/sub-contractor performing the Work is a third tier or below, SANBAG is obligated to pay no more than the above-stated maximum allowance percentages once applied to actual direct costs incurred at the tier Changed Work occurred, plus no more than above-stated commission percentage twice applied to sum of direct costs, indirect costs, taxes and insurance, overhead and profit actually allowed.

10 COMPENSATION (CONTRACT ARTICLE 4)

A. MEASUREMENT AND PAYMENT

1. The Contractor will be paid based on the Contract Items in the executed Bid Item List in accordance with Contract Article 4.

2. Contract quantities are approximate quantities that have been calculated from the lines shown on the Plans, with no allowance for shrinkage, swelling, overbuild, or waste.

<u>Note to Bidder</u>: Quantities shown in the Bid Item List are for reference only and it is Contractor's sole responsibility to determine the exact quantities necessary to execute and complete the Work. Contract items will be paid on a percentage complete value for the

Total Cost extended to the right for each line of the Bid Item List, not by the product of Estimated Quantity and Unit Cost.

B. APPLICATION FOR PROGRESS PAYMENT

1. Application for Progress payment will be for specific items, based on the percentage completed, in accordance with the approved Schedule of Values. The percentage complete will be based on the dollar value of the partially completed work relative to the dollar value of the contract item when entirely completed to SANBAG's satisfaction, and made ready for service.

2. Each application shall be consistent with previous applications and payments, as approved by SANBAG and paid by SANBAG. The Initial application for payment, the application for payment at time of Substantial Completion, and the application for final payment involve additional requirements.

3. Payment Application Times: The period covered by each application for payment is from the 20th day of the prior month through and including the 20th of the current month of the billing cycle. The Contractor shall allow not less than of 5 working days for SANBAG to evaluate the certified amounts and accept or reject the requisition.

4. Application for Payment Forms: The Contractor will submit applications for payment on forms acceptable to SANBAG. The Contractor shall submit forms for pre-approval, along with the initial submittal of the Schedule of Values for approval.

5. Application Preparation: Every entry on the form must be completed. The form shall be executed by a person authorized to sign legal documents on behalf of the Contractor. SANBAG will return incomplete applications without taking action.

   a. Entries shall match the Bid Item List.
   b. Include amounts for Work completed since the previous Application for Payment, whether or not payment has been received on the prior request. Include amounts for work performed under executed Change Orders and Change Orders issued unilaterally during the construction period covered by the application.
   c. Certified payrolls, current and accurate, shall be submitted to SANBAG to support each application for progress payment.

   d. Furnish proper waivers of liens, releases, (conditional releases for payments being requested and unconditional releases for payments received), affidavits, sworn statements listing all contracts let and to be let and obligations due or to become due for equipment (and rentals thereof), materials, labor and services under subcontracts entered into by the prime contractor and other evidence establishing that all accounts for services, labor, materials, equipment and rentals thereof furnished by or for the prime contractor in the performance of this Contract and the execution of the Work have been paid in full.

   e. Include back-up calculations substantiating the quantities and locations of the requested quantities to be paid. The submitted documentation shall be subject to SANBAG approval. The application shall be deemed incomplete until the calculations submitted by the Contractor can be approved by SANBAG.

f. The Contractor shall submit finalized signed and certified Applications for Progress Payments to the Construction Manager.

6. At the sole discretion of SANBAG, application for payment amounts may include materials or equipment purchased or fabricated and stored, but not yet installed (Stored Materials). Payments may be made, if approved in advance by SANBAG in writing, for materials stored off site pursuant to following conditions:

   a. When approved by SANBAG in accordance with other Specification requirements, a maximum of 80 percent of the substantiated value of material will be paid for material stored off site for off-site fabrication or finishing. Materials shall be stored at a bonded facility, and shall be adequately insured and protected against theft and exposure or loss. Materials shall not be susceptible to deterioration or physical damage in storage or in transit to the Site. Payments shall not be made for materials in transit to the site or to a storage or transfer site.

   b. Provide a certificate of insurance, evidence of transfer of title to SANBAG, and surety's consent to payment for Stored Materials. Provide supporting documentation that verifies the amount requested, such as paid invoices. Match the amount requested with amounts indicated on documentation. Do not include overhead and profit on Stored Materials.

   c. Provide summary documentation for Stored Materials. indicating the following:

      1. Materials previously stored and included in previous applications for payment.
      2. Work completed for the current application utilizing previously stored materials.
      3. Additional materials stored with the current application.
      4. Total materials remaining stored, including materials with the current application.

7. Transmittal: Submit signed application for payment to SANBAG, including lien waivers and other attachments as required. Each application shall be transmitted with a separate transmittal form, listing attachments and recording appropriate information about the application. For each application, attach a copy of SANBAG approved certified payroll and worker hour report form, including individual forms for Subcontractors of any tier. The certified payroll and worker hour report form shall be submitted for Contractors and Subcontractors of any tier, even if no Work was performed by the Contractor or Subcontractor during the reporting period; and, in such cases, the form should state that "No Work was performed."

8. Stop Notice Waivers and Release: With each application for payment, submit fully executed Conditional and Unconditional Stop Notice Waivers and Releases from entities lawfully entitled to file Stop Notices arising out of the Contract, and related to the Work covered by the payment.
   a. Submit fully executed unconditional or partial waivers and releases for the amount requested in the previous application (after deduction for retainage) on each item and for each Subcontractor and Supplier included in the previous application.
   b. Submit fully executed conditional or partial waivers and releases for the amount requested in each application, after deduction for retainage, on each item and for each Subcontractor and Supplier included in the application.
   c. When an application shows completion of an item, submit conditional final or full waivers. SANBAG reserves the right to designate which entities involved in the Work must submit waivers. Unconditional waivers and releases must state the amount that the Contractor, Subcontractor, or Supplier has been paid with respect to payment most recently made to the Contractor by SANBAG.

d. Waiver Forms: Submit waivers on forms as set forth in California Civil Code. The forms should be executed in a manner acceptable to SANBAG, and they should clearly state that they are not intended to release claims beyond the amount of the progress payment made, and do not cover unprocessed or unresolved claims.

e. In the event the Contractor fails to supply any of the foregoing waivers and release forms, SANBAG reserves the right to retain the amount attributable to any such Subcontractor or Supplier until the appropriate form is received.

9. Application for Payment at Substantial Completion: After receiving the Certificate of Substantial Completion, the Contractor shall submit an application showing 100 percent completion for that portion of the Work certified as being substantially complete.
   a. Include documentation supporting that the Work is substantially complete and a statement showing an accounting of Changes to the Contract Price.
   b. This application shall reflect Certificates of Partial Substantial Completion issued previously for SANBAG occupancy of designated portions of the Work.
   c. Administrative actions and submittals that shall precede or coincide with this application include the following:

      1. Occupancy permits and similar approvals
      2. Warranties (guarantees) and maintenance agreements
      3. Test/adjust/balance records
      4. Maintenance instructions
      5. Meter readings
      6. Start-up performance reports
      7. Changeover information related to SANBAG's occupancy, use, operation, and maintenance
      8. Final cleaning
      9. Application for reduction of retainage and consent of surety
      10. Instructions for transferring insurance coverages
      11. Final progress photographs
      12. Provide list of incomplete Work, recognized as exceptions to SANBAG's Certificate of Substantial Completion

C. PROMPT PAYMENT TO SUBCONTRACTORS

Prior to SANBAG’s certification of progress payments, commencing with the second invoice, the Contractor shall provide SANBAG with evidence of Prompt Payment to Subcontractors for all amounts due for Work satisfactorily performed. Failure of the Contractor to make prompt payment as defined in this Section, or to delay payment without prior written consent of SANBAG, shall constitute noncompliance with this Contract, which may result in appropriate administrative sanctions which may include withholding of payment of Contractor’s invoice by SANBAG until payment is made to the Subcontractor/Supplier or termination of the Contract in accordance with the Contract Article entitled, “Termination of Contract”.

D. PAYMENT APPROVAL

1. SANBAG may elect not to approve payment, and may withhold payment in whole or in part, to the extent reasonably necessary to protect SANBAG if, in SANBAG’s opinion, payment in the amount of the application cannot be approved. SANBAG will notify the Contractor in writing of

SANBAG's reasons for withholding payment in whole or in part. If the Contractor and SANBAG cannot agree on a revised amount, SANBAG will promptly issue a payment in the amount for which SANBAG can certify. SANBAG may also elect not to approve payment or, because of subsequently discovered evidence or subsequent observations, may nullify all or part of any payment previously issued, to such extent as may be necessary in SANBAG's opinion to protect SANBAG from loss because of the following:

a. Defective Work not remedied
b. Third-party Claims filed, or reasonable evidence indicating probable filing of such Claims
c. Failure of the Contractor to make payments properly to Subcontractors or for labor, materials, or equipment
d. Reasonable evidence that Work cannot be completed for the unpaid balance of the total Contract Price
e. Damage to SANBAG or party other than contractor
f. Reasonable evidence that Work will not be completed within Contract Time and that the unpaid balance would not be adequate to cover actual or liquidated damages for the anticipated delay
g. Persistent failure to carry out Work in accordance with the Contract Documents
h. Any liquidated damages that have subsequently accrued as of the date of the Application for Payment
i. Any sums expended by SANBAG in performing any of the Contractor's obligations under the Contract that the Contractor has failed to perform
j. Any other sums that SANBAG is entitled to recover from the Contractor under the terms of the Contract equity, or the law, including insurance deductibles

2. When the above reasons for withholding payment are removed, payment will be made accordingly for amounts previously withheld for those reasons that were removed.
3. The failure of SANBAG to deduct any of the above-identified withholdings from a progress payment shall not constitute a waiver of SANBAG's right to such withholdings.
4. SANBAG shall not have an obligation to pay or to see to payment of money to Subcontractors, except as may otherwise be required by law adjudicated by a court of competent jurisdiction.
5. Any payment or partial payment, or partial or entire use or occupancy of the Project by SANBAG shall not constitute acceptance of the Work not in accordance with the Contract Documents.

E. FINAL PAYMENT APPLICATION

1. After SANBAG issues a Certificate of Final Acceptance, Contractor shall submit an Application for Final Payment to SANBAG, with releases and supporting documentation not previously submitted and accepted, including, but not limited, to the following:

a. Evidence of completion of all Project closeout requirements
b. Completion of items specified for completion after Substantial Completion (Punch List)
c. Insurance certificates for products and completed operations (where required), and proof that taxes, fees, and similar obligations were paid in full
d. An updated final statement, accounting for final changes to the total Contract Price
e. Surety consent to Final Payment
f. Evidence that all Claims have been settled
g. Final meter readings for utilities, a measured record of stored fuel, and similar data as of the Date of Substantial Completion, or when SANBAG took possession of and assumed responsibility for corresponding elements of the Work, whichever occurs first
h. A final liquidated damages settlement statement
i. Transmittal of required Project Record documents to SANBAG
j. Delivery of keys, extra stock and spare parts for maintenance

k. Removal of temporary facilities and services, surplus materials, rubbish, and similar elements

2. The Contractor shall prepare and submit a proposed Application for Final Payment to SANBAG, showing the proposed total amount due the Contractor; any Change Orders; increased or decreased bond premiums due to Change Orders and other bases for payments; deductions made or to be made for prior payments; amounts to be retained; any Claims the Contractor intends to file at that time, or a statement that no Claims will be filed; and any unsettled Claims, stating the specific amounts. The Application for Final Payment shall be accompanied by complete and legally effective releases or waivers of liens and stop notices arising out of or filed in connection with the Work, in a form satisfactory to SANBAG. Prior applications and payments shall be subject to correction in the proposed Application for Final Payment. Claims filed with the Application for Final Payment must be otherwise timely under these Contract Conditions. **Payments to the Contractor shall be made only for the actual dollar value of the Contract items constructed in accordance with the Contract Documents.**
3. SANBAG shall review the Contractor's proposed Application for Final Payment. Any recommended changes or corrections shall be forwarded to the Contractor. Within 10 days thereafter the Contractor shall submit its revised Application for Final Payment, incorporating any recommended changes or corrections made by SANBAG. Upon acceptance by SANBAG, the revised Application for Final Payment shall become the basis for final payment.
4. If no Claims have been filed with the Application for Final Payment and no other Claims remain unsettled, and agreements are reached on all questions regarding the Application for Final Payment, SANBAG, in exchange for an executed release that is satisfactory in form and substance to SANBAG, shall pay the entire sum found due on the approved Application for Final Payment, including the amount, if any, allowed on Claims.
5. Final payment shall be made within 30 days after SANBAG’s approval of the Application for Final Payment. SANBAG may withhold from the final payment any amount authorized by the Contract, at law or equity.
6. Notwithstanding SANBAG's acceptance of the Application for Final Payment and irrespective of whether it is before or after final payment has been made, SANBAG shall not be precluded from subsequently showing that (1) the true and correct amount or type of Work performed or equipment and materials furnished is/are different from that previously accepted, (2) the previously accepted Work or materials did not in fact conform to the Contract requirements, or (3) a previous payment or portion thereof for Work performed or materials furnished was improperly made. SANBAG also shall not be stopped from demanding and recovering damages from the Contractor as appropriate, under any of the foregoing circumstances as permitted under the Contract, at law or equity.

F. FINAL PAYMENT AS RELEASE

The release provided by the Contractor shall be free from any and all Claims arising from the Work under and in connection with the Contract, and shall release and waive any Claims against SANBAG, its Member Agencies, the Engineering Consultant, the Construction Management Consultant, and their respective agents, officers, members, and employees. The release shall be accompanied by a certification by the Contractor that (1) it has resolved any Claims made by Subcontractors, Suppliers, and others against the Contractor or the Project Owner; (2) it has no reason to believe that any party has a valid Claim against the Contractor or the Project Owner which has not been communicated in writing by the Contractor to SANBAG; and (3) all warranties and guarantees are in full force and effect.

G. RETENTION ON PROGRESS PAYMENTS

SANBAG shall retain from each progress payment five percent (5%) of the progress payment as part security for the fulfillment of the Contract by the Contractor. The 5% will be held from the total Contract Price, as amended, or as adjusted by Change Orders.

1. Should the Contractor retain partial payment of Subcontractor's/Supplier's invoices for any reason allowable under the terms of this Contract and the Contractor's written agreement with the Subcontractor or Supplier, the Contractor agrees to make payment of such retainage within 10 working days of satisfactory completion of the work or other obligation.
2. At the request and expense of the Contractor, securities equivalent to the amount withheld shall be deposited with SANBAG, or with a state or federally chartered bank in California as the escrow agent, which shall then pay those monies to the Contractor. Upon satisfactory completion of the Contract, the securities shall be returned to the Contractor.
3. Alternatively, the Contractor may request and SANBAG shall make payment of retentions earned directly to the escrow agent at the expense of the Contractor. At the expense of the Contractor, the Contractor may direct the investment of the payments into securities, and the Contractor shall receive the interest earned on the investments under the same terms provided for in this section for securities deposited by the Contractor. Upon satisfactory completion of the Contract, the Contractor shall receive from the escrow agent all securities, interest, and payments received by the escrow agent from SANBAG, pursuant to the terms of this Section. The escrow contract used pursuant to this Section shall be substantially similar to the form set forth in the California Public Contract Code.
4. Securities eligible for investment under this Section shall include those listed in the Government Code, bank or savings and loan certificates of deposit, interest-bearing demand deposit accounts, standby letters of credit, or any other security mutually agreed to by the parties.

H. STOP NOTICES

1. SANBAG will retain and withhold from payment to the Contractor sufficient sums to cover stop notices filed pursuant to Section 3179 et seq. of the California Civil Code, including an amount to provide for the reasonable cost of any litigation thereunder.
   In addition to other amounts properly withheld under this Section or under other provisions of the Contract, SANBAG shall retain from Progress Payments otherwise due the Contractor an amount equal to 125% of the amount claimed under any Stop Notice under Civil Code §3179 et. seq. or other lien filed against the Contractor for labor, materials, supplies, equipment, and any other thing of value claimed to have been furnished to and/or incorporated into the Work; or for any other alleged contribution thereto. In addition to the foregoing and in accordance with Civil Code §3186, SANBAG may also satisfy its duty to withhold funds for Stop Notices by refusing to release funds held in escrow pursuant to Public Contract Code §22300. However, SANBAG may release such funds upon receipt of a Release of Stop Notice executed by a Stop Notice Claimant, a Stop Notice Bond, an order of a court of competent jurisdiction, or other evidence satisfactory to SANBAG that the Contractor has resolved such claim by settlement.

END OF SECTION

SECTION 01 11 13
WORK COVERED BY THE CONTRACT DOCUMENTS

PART 1 - GENERAL

1.1 SUMMARY

A. This section summarizes requirements and provisions for the Contractor's execution of the Work under this Contract.

1.2 DESCRIPTION

A. Refer to San Bernardino Transit Center Emergency Generator and Landscape Modifications Plans and Specifications for a summary of the Work. The general intent of the Contract, Specifications, Plans, and all other Contract Documents and provisions thereof is that the Contractor shall:
   1. Furnish all tools, qualified labor, materials, equipment, qualified superintendence and all services, other incidentals, assurances and guarantees, assumptions of risk, and responsibility for the performance of the Work as set forth in the Contract Documents.
   2. Begin Work promptly and proceed expeditiously and continuously without cessation or shutdown of Work unless otherwise specifically approved in writing by SANBAG, or directed by the Contract.
   3. Perform, complete, and make ready for its intended purpose, within the times specified, including additional times provided for certain conditions, the Work or parts thereof covered by the Contract, all in accordance with Plans, Specifications, and any addendum thereto and such direction or instructions as SANBAG may give from time to time pursuant to the Contract Documents. The Contractor shall retain sole responsibility and expense for Quality Control of their Work products.
   4. Any construction staging plans or details are not meant to be contradictory to the requirements set forth in the Contract Documents. It is the responsibility of the Contractor to schedule the construction activities at each site of the Work, using the Site-Specific Work Plan (SSWP) process (see also Section 01 14 00 "Work Restrictions").

1.3 INTENT OF PLANS AND SPECIFICATIONS

A. The intent of the Plans and Specifications is to prescribe the details for the construction and completion of the Work that the Contractor undertakes to perform in accordance with the terms of the Contract. Where the Plans or Specifications describe portions of the Work in general terms, but not complete detail, it is understood that only commonly accepted industry practice is to prevail. Unless otherwise specified, the Contractor shall all the Work involved in executing the Contract in a satisfactory and workmanlike manner.

B. SANBAG will determine whether the Work has been completed in accordance with the Contract Documents. SANBAG will decide all questions that may arise as to the quality or acceptability of materials furnished and Work performed, and render final judgment regarding the interpretation of the Contract Documents.

C. Plans, Standard Specifications, Project-specific Specifications, and referenced specifications or standards are essential parts of the Contract Documents, and a requirement indicated in one is binding as though indicated in all.

D. Words and abbreviations that have well-known technical or trade meanings are used in the Contract Documents in accordance with such recognized meanings.

1. The word "Furnish" or the word "Install" or the word "Perform" or the word "Provide" or the word "Supply," or any combination or similar directive or usage thereof, shall mean furnishing and incorporating in the Work including all necessary labor, materials, equipment, and everything necessary to perform the Work indicated, unless specifically limited in the context used.

E. The organization of the Specifications into divisions, sections, parts, and paragraphs, and the arrangement of the Plans, shall not control the Contractor in dividing the Work among Subcontractors or in establishing the extent of Work to be performed by any trade. The Contractor shall examine and compare all of the Contract Documents and immediately report to SANBAG any error, inconsistency, or omission that may be discovered. The Contractor shall be liable to SANBAG for any damage resulting from any such unreported errors, inconsistencies, or omissions in the Contract Documents.
   1. The Specifications may vary in form, format and style. Some specification sections are written in varying degrees of streamlined or declarative style and some sections may be relatively narrative by comparison. Omissions of such words and phrases as "the Contractor shall," "in conformity with," "as shown," or "as specified" are intentional in streamlined sections. Omitted words and phrases shall be supplied by inference. Similar types of provisions may appear in various parts of a section or articles within a part depending on the format of the section. The Contractor shall not take advantage of any variation of form, format or style in making claims for Extra Work.
   2. The cross referencing of specification sections under the subparagraph heading "Related Requirements" and elsewhere within each specification section is provided as an aid and convenience to the Contractor. The Contractor shall not rely on the cross referencing provided and shall be responsible to coordinate the entire Work under the Contract Documents and provide a complete Project whether or not the cross referencing is provided in each section or whether or not the cross referencing is complete.

F. The Work herein covered is to be completed in accordance with the Specifications, the accompanying Plans, and such instructions or directions as SANBAG may give to supplement Plans and Specifications. Wherever the words "directed," "permitted," "approved," "acceptable," "satisfactory to," or similar words or phrases occur in the Contract Documents, they shall be understood to be functions of SANBAG.

G. SANBAG shall not be responsible for and shall not have control or charge over the acts or omissions of the Contractor, Subcontractors, or any of their agents or employees, or any other persons performing any of the Work.

1.4 REFERENCE MATERIAL

A. Reference Specifications or Standards referred to in the Plans, Standard Specifications, or Project-specific Specifications shall be the most recent version in effect as of the bid date of this Contract. Where referenced standards refer to the "Specifications," this shall mean Standard Specifications, the Contract Plans, and the Project-specific Specifications of this Contract. Where referenced standards refer to the "special provisions or conditions," this shall mean the Contract Plans or the Specifications of this Contract. The Contractor is responsible for obtaining all reference material at its own expense, and for making itself familiar with the requirements therein.

PART 2 - PRODUCTS (NOT USED)

PART 3 - EXECUTION (NOT USED)

PART 4 - MEASUREMENT AND PAYMENT

A. Work of this Section is considered incidental to Work under other payment items and no separate measurement or payment will be made to the Contractor for Work of this Section.

END OF SECTION

This page intentionally left blank.

SECTION 01 11 15
DEFINITION OF TERMS AND REFERENCE STANDARDS

PART 1 - GENERAL

1.1 SUMMARY

A. This Section provides definition of terms, abbreviations and reference standards cited in the Contract Documents. The following definitions supplement definitions provided throughout the Contract Documents.

1.2 DEFINITION OF TERMS (NOT USED)

1.3 ABBREVIATIONS

A. Association & General Abbreviations:

AA	Aluminum Association
AABC	Associated Air Balance Council
AAIEE	American Institute of Electrical and Electronics Engineers
AAMA	Architectural Aluminum Manufacturers Association
AAN	American Association of Nurserymen
AAR	Association of American Railroads
AASHTO	American Association of State Highway and Transportation Officials
ACI	American Concrete Institute
ADA	Americans with Disabilities Act
ADC	Air Diffusion Council
AGA	American Gas Association
AGC	Associated General Contractors
AI	Asphalt Institute
AISC	American Institute of Steel Construction, Inc.
AISI	American Iron and Steel Institute
AMCA	Air Moving and Conditioning Association, Inc.
ANSI	American National Standards Institute
APA	American Plywood Association
APWA	American Public Works Association
AREMA	American Railway Engineering and Maintenance of Way Association
ARI	Air Conditioning and Refrigeration Institute
ASHRAE	American Society of Heating, Refrigerating and Air Conditioning Engineers
ASME	American Society of Mechanical Engineers
ASSE	American Society of Sanitary Engineers
ASTM	American Society for Testing and Materials
AWPA	American Wood Preservers Association
AWPB	American Wood Preservers Bureau
AWPI	American Wood Preservers Institute
AWS	American Welding Society
AWWA	American Water Works Association
BWC	Bridge Welding Code
BWS	Bridge Worker Safety
CBM	Certified Ballast Manufacturers
CCR	California Code of Regulations (formerly California Administrative Code)
CFR	Code of Federal Regulations
CLFMI	Chain Link Fence Manufacturers Institute
CISPI	Cast-Iron Soil Pipe Institute
CPUC	California Public Utilities Commission
CRSI	Concrete Reinforcing Steel Institute

CSI	Construction Specifications Institute
CS	Commercial Standard, US Department of Commerce
CTIOA	Ceramic Tile Institute of America
DBE	Disadvantaged Business Enterprise
DHI	Door and Hardware Institute
DOD	Department of Defense (leading symbol)
DOJ	U.S. Department of Justice
DOT	U.S. Department of Transportation
EEO	Equal Employment Opportunity
EEOC	Equal Employment Opportunity Commission
EIC	Employee-In-Charge
EPA	United States Environmental Protection Agency
ETL	Electrical Testing Laboratories
FAR	Federal Acquisition Regulations
Fed Spec	Federal Specification or Standard
FGMA	Flat Glass Marketing Association
FHWA	Federal Highway Administration
FIA	Factory Insurance Association
FM	Factory Mutual
FRA	Federal Railway Administration
FS	Federal Specifications
FTA	Federal Transit Authority
GA	Gypsum Association
GAO	U.S. Government Accountability Office
ICBO	International Conference of Building Officials
IEEE	Institute of Electrical and Electronic Engineers
IES	Illuminating Engineering Society
ISO	International Standards Organization
MIA	Masonry Institute of America
MIL	Military Specification or Standard (leading symbol)
MLMA	Metal Lath Manufacturers Association
ML/SFA	Metal Lath/Steel Framing Association
MS	Military Specifications
NBS	National Bureau of Standards (now NIST, q.v.)
NEC	National Electrical Code
NEMA	National Electrical Manufacturers Association
NFC	National Fire Code
NFPA	National Fire Protection Association
NIST	National Institute of Standards and Technology (formerly NBS, q.v.)
NLMA	National Lumber Manufacturers Association
NOAA	National Oceanic and Atmospheric Administration
NPDES	National Pollutant Discharge Elimination System
OSHA	Occupational Safety and Health Administration
PCA	Portland Cement Association
PS	Product Standard, US Department of Commerce
RIS	Redwood Inspection Service
SAE	Society of Automotive Engineers
SDI	Steel Deck Institute
SDI	Steel Door Institute
SFM	State Fire Marshal
SIGMA	Sealed Insulating Glass Manufacturers Association
SJI	Steel Joist Institute
SMACNA	Sheet Metal and Air Conditioning Contractors National Association
SPR	Simplified Practice Recommendations, U.S. Dept. of Commerce
SSPC	Steel Structures Painting Council
SSPWC	Standard Specifications and Plans for Public Works Construction
SSWP	Site Specific Work Plan
TCA	Tile Council of America
UBC	Uniform Building Code

UFAS	Uniform Federal Accessibility Standards
UL	Underwriters' Laboratories, Inc.
WCLIB	West Coast Lumber Inspection Bureau
WIC	Woodwork Institute of California
WWPA	Western Wood Products Association

B. Railroad Operators, Agency, and Organization Abbreviations:

BNSF	Burlington Northern Santa Fe Railway
Caltrans	California Department of Transportation
LACMTA or MTA	Los Angeles County Metropolitan Transportation Authority
OCTA	Orange County Transportation Authority
RCTC	Riverside County Transportation Commission
SANBAG	San Bernardino County Association of Governments
SCRRA	Southern California Regional Rail Authority
UPRR	Union Pacific Railroad
VCTC	Ventura County Transportation Commission

C. Text Abbreviations:

AMP or amp	Ampere
AWG	American Wire Gage
CFM or cfm	Cubic feet per minute
FPM or fpm	Feet per minute
FPS or fps	Feet per second
Ft. or '	Feet
GPM or gpm	Gallons per minute
in. or "	Inches
Kip or kip	thousand pounds
Ksi or ksi	thousand pounds per square inch
Ksf or ksf	thousand pounds per square foot
KV or kV	Kilovolt
KVA or kva	Kilovolt amperes
KW or kW	Kilowatt
KWH or kwh	Kilowatt hour
LF or lf	linear foot
MPH or mph	Miles per hour
PCF or pcf	Pounds per cubic foot
PSF or psf	Pounds per square foot
PSI or psi	Pounds per square inch
SF or sf	Square foot
SY or sy	Square yard

1.4 REFERENCE STANDARDS

A. For products or workmanship specified by association, trade, or Federal Standards, the Contractor shall comply with requirements of the standard, except when more rigid requirements are specified or are required by applicable codes.

B. The Contractor shall conform to reference standards by date of issue current as of date of Agreement between SANBAG and the Contractor.

C. The Contractor shall maintain the latest copy of applicable sections of standards at Work Site during submittals, planning, and progress of specific Work, until substantial completion, and shall make the standards available for SANBAG's use upon request.

D. Should specified Reference Standards (those standards listed in the Schedule of References in addition to those codes and regulations specified elsewhere in the Specifications) conflict with the Contract Documents, the Contractor shall request clarification from SANBAG before proceeding. If conflict exists, the Specification as determined by SANBAG shall apply.

1.5 SCHEDULE OF REFERENCES

A. AAR: Association of American Railroads

B. ACI: American Concrete Institute

C. AGC: Association of General Contractors

D. ANSI: American National Standards Institute

E. ASTM: American Society for Testing and Materials

F. AWPA: American Wood-Preservers' Association

G. BNSF: Burlington Northern Santa Fe Railway

H. CALOSHA: California Office of Safety and Health Administration

I. CALTRANS: State of California Department of Transportation

J. CAMUTCD: California Manual on Uniform Traffic Control Devices

K. CITY: City of San Bernardino

L. CPUC: California Public Utilities Commission

M. CRSI: Concrete Reinforcing Steel Institute

N. FTA: Federal Transit Administration

O. FRA: Federal Railroad Administration

P. GCOR: General Code of Operating Rules

Q. MSHA: Mine Safety and Health Administration

R. NRMCA: National Ready Mixed Concrete Association

S. OSHA: Office of Safety and Health Administration

T. SCRRA: Southern California Regional Rail Authority (Metrolink)

U. SSPWC: Standard Specifications for Public Works Construction (Greenbook)

V. USDOT: United States Department of Transportation

PART 2 - PRODUCTS (NOT USED)

PART 3 - EXECUTION (NOT USED)

PART 4 - MEASUREMENT AND PAYMENT

A. Work of this Section is considered incidental to Work under other payment items and no separate measurement or payment will be made to the Contractor for Work of this Section.

END OF SECTION

SECTION 01 14 00
WORK RESTRICTIONS

PART 1 - GENERAL

1.1 SUMMARY

A. This Section outlines requirements and provisions for rules and hours of operation for the Contractor execution of the Work under this Contract.

1.2 RELATED REQUIREMENTS

A. Section 01 14 19, Coordination with Utilities

B. Section 01 35 23, Site Safety Requirements

1.3 REFERENCE STANDARDS

A. Comply with the provisions of all local, State, and Federal codes, specifications, standards, and industry recommended practices including:
   1. SSPWC: Standard Specifications for Public Works Construction.
   2. CALOSHA: California Occupational Safety and Health Administration regulations.
   3. OSHA: Federal Occupational Safety and Health Administration regulations.

1.4 CONTRACTOR'S RESPONSIBILITY

A. The Contractor shall perform Work in accordance with the Contract and all applicable codes, ordinances, rules, regulations, orders, and other legal requirements of governmental bodies and public agencies having jurisdiction, including SANBAG.

B. Any damage caused by the Contractor to structures, embankment, third-party property, or any other facilities shall be repaired at the Contractor's expense to a condition equal to or better than the condition prior to the Contractor entry, and as accepted by SANBAG. At the sole discretion of SANBAG, SANBAG may direct that repairs be performed by other Contractors. The charges for such repairs shall be deducted from the Contractor's payment due under this Contract.

C. Items shown on the plans to be protected in place shall be in accordance with SSPWC, Protection and Restoration of Existing Improvements, at no additional cost to SANBAG.

1.5 CONTRACTOR USE OF WORK SITE

A. The Contractor shall coordinate access, use, and preparation of facilities adjacent to the Project areas with respective owners and agencies. Coordination shall include but not be limited to the following:
   1. The Contractor shall arrange Work Site access with adjacent property owners for the use of private property, as the Contractor deems necessary for the Work.
   2. The Contractor shall submit a staging plan for review by SANBAG.
   3. Contractor shall obtain approval from all governing agencies, utility companies and agencies, and private property owners for any use of designated or alternative staging areas.

B. Rights-of-Way: Rights-of-way, easements, or rights-of-entry for the Work will be provided by SANBAG. The Contractor shall make arrangements, pay for, and assume all responsibility for acquiring, using, and disposing of Work areas and facilities temporarily required that are necessary in addition to those provided by SANBAG. The Contractor shall indemnify and hold SANBAG harmless for all claims for damages caused by such actions.

C. Work on Private Property: SANBAG will make contracts with private property owners for the construction easement areas indicated on the Contract Plans. Any additional easement areas requested by the Contractor shall be obtained by separate contract between the Contractor and the property owner, and shall be solely at the Contractor's own risk and expense. SANBAG will not be a party to nor assume any liability for those separate contracts. The Contractor shall transmit copies to SANBAG of all executed property agreements, easements and contracts with third parties within 3 working days of the execution. The Contractor shall coordinate scheduling of Work to be performed on private property with property owner and property tenant so as to minimize inconvenience to the property owner and property tenant.

D. Property Rights in Land and Improvements: The Contractor shall make no arrangements with any person or entity to permit occupancy or use of any land, structure, or building within the limits of the Work, for any purpose whatsoever, either with or without compensation, in conflict with any agreement between SANBAG and any third-party owner, former owner, or tenant of such land, structure, or buildings.

E. The Contractor shall confine Work Site operations to areas permitted by law, ordinances, permits, and the Contract.

F. The Contractor shall consider the safety of the Work, operations personnel, and property on and adjacent to the Work Site when determining amount, location, movement, and use of materials and equipment on Work Site. The Contractor shall not load Work Site with excessive amounts of material, equipment, or other items that have the potential to interfere with the Work or with operations. The Contractor shall relocate stored products, equipment, and materials that interfere with operations or public and private utilities. Materials and equipment shall not be so piled, stored, or parked when not in use.

G. The Contractor shall adhere to the noise levels and hours of Local Ordinances.

H. The Contractor shall be responsible for coordinating its Work with all property owners affected by the Contractor’s operations. The Contractor shall protect the general public and residents within Work Site boundaries from Work-related activities, and shall not unnecessarily inconvenience those persons by Work activities.

I. The Contractor shall submit for SANBAG’s and Omnitrans approval the proposed location of any staging areas not otherwise shown on the plans.

J. The Contractor will preserve drainage facilities throughout the duration of the Work so that there is no pending or accumulation of water in any Work Site area, there is no flow of water diverted toward the track or out of normal drainage channels, and all culvert inlets and outlets are kept free of debris.

K. Except where specifically designated in the design of the Work, the Contractor will preserve the ability of maintenance contractors to access the right-of-way using highway vehicles. If the original right-of-way roads become blocked with the Contractor’s materials, equipment, or excavations or spoils, alternate routes must be arranged.

L. The Contractor will preserve existing right-of-way fences and walls, and will replace any such fences or walls damaged during the work to the satisfaction of the owner(s) of the fences or walls.

1.6 WORK ZONE LIMITATIONS OF SITE

A. The Contractor shall coordinate available space with SANBAG, and other entities needing access and space so as to produce the best overall efficiency in performance of the Work.

B. The Contractor shall schedule deliveries so as to minimize space and time requirements for storage of materials and equipment on site, with minimal disruption to the adjacent property owners and their operations. Pick ups and deliveries requiring vehicular traffic adjacent to tracks shall be performed only during normal working hours and as approved by SANBAG.

1.7 WORK WINDOWS

A. The Contractor shall not perform any fieldwork during New Year's Day, Memorial Day, Independence Day, Labor Day, Thanksgiving and Christmas unless pre-approved by SANBAG.

1.8 WORKS BY OTHERS

A. The Contractor may be required to interface with forces working for other contractors, utility companies, public agencies, private companies, and Railroad Operators. In addition, routine or emergency maintenance of existing facilities may occur during the progress of the Work. Such activities shall have priority and SANBAG shall make efforts to minimize interference where possible.

1.9 HOURS OF OPERATIONS

A. Refer to Special Conditions.

PART 2 - PRODUCTS (NOT USED)

PART 3 - EXECUTION (NOT USED)

PART 4 - MEASUREMENT AND PAYMENT

A. Work of this Section is considered incidental to Work under other payment items and no separate measurement or payment will be made to the Contractor for Work of this Section.

END OF SECTION

SECTION 01 14 19
COORDINATION WITH UTILITIES

PART 1 - GENERAL

1.1 SUMMARY

A. This Section outlines requirements and provisions regarding the Contractor responsibility for coordination with all utility owners to ensure that all utilities are clearly marked, protected for the duration of the construction activities or relocated. The exhibit to this Specification Section entitled "Project Utility Responsibilities," when included in the Project-specific Specifications, shall identify each of the utilities affected by the Work.

1.2 RELATED REQUIREMENTS

A. Section 01 33 00, Submittal Procedures

1.3 SUBMITTALS

A. Where required by the Contract Documents, the Contractor shall prepare Shop Drawings showing existing utility information and the installation of any utility protection facilities or features to be established on the site prior to initiating construction, maintained for the duration of construction and removed upon completion of construction. This information submitted to the utility owner and SANBAG shall identify all necessary Work to adjust, move, or relocate existing utility structures, utility poles, lines, services, or other utility appurtenances located in or affected by construction.

B. The Contractor shall coordinate with all utility owners and authorities having jurisdiction over these facilities and shall remove and relocate existing utilities and equipment whenever an existing installation interferes with new construction. Carefully examine each location and make arrangements in advance with SANBAG to ensure that construction has a minimum impact on the daily operations of SANBAG and the Railroad Operators.

C. Where required by a utility owner or an authority having jurisdiction over an underground facility, within 15 calendar days of the effective date of the NTP, the Contractor shall submit a potholing plan consisting of a plan, schedule, and sequencing to identify and investigate by vacuum potholing all underground utilities and facilities.

D. The relocated utilities shall be specifically identified in the record documents. The types of material and methods of relocation and reconnection of utilities shall match the existing unless otherwise noted.

E. The Contractor shall furnish SANBAG copies of all utility required permits or approvals obtained prior to starting Work at or adjacent to the utility facilities.

PART 2 - PRODUCTS (NOT USED)

PART 3 - EXECUTION

3.1 GENERAL

A. Prior to commencing construction, the Contractor shall engage an underground utility detection company to detect and locate all existing underground utilities within the limits of work. All underground utility information, including the approximate depth, shall be clearly marked on surface and existing pavement for reference. The information shall also be recorded in the Project files. Also before commencing work, the Contractor shall notify DigAlert at 8-1-1 or www.digalert.org, no less that 48 hours in advance of excavation and advise SANBAG of DigAlert Identification number two working days before excavation begins. Before commencing work, the Contractor shall also notify the Railroad Operators and utility owners which have underground facilities within the limits of work, but which do not participate in DigAlert, in accordance with each Railroad Operators' or utility owners' notification requirements, and have them locate and mark the facilities within the area of excavation (or demolition). The Contractor shall keep such markings current in accordance with the requirements of DigAlert, the Railroad Operators and utility owners.

3.2 POTHOLING FOR SUBSURFACE UTILITIES AND FACILITIES

A. Where required by a utility owner or an authority having jurisdiction over an underground facility, within 30 calendar days of the effective date of the NTP and after SANBAG's approval of the Contractor's potholing plan, the Contractor shall mobilize at least one potholing crew. The potholing crew will work on a continuous basis to identify, locate and verify the location of underground utilities at all project locations. It is the Contractor's responsibility to submit the potholing plan and obtain SANBAG's approval within this time period.

B. Potholing and verification of utility facilities shall be completed at least 30 days in advance of any excavation. The intent of performing potholing and verification of utility facilities well in advance of any relocation, protection or modification is to preclude any delays or disruption arising from utility relocation. Accordingly, any failure on the Contractor's part to perform the potholing and verification of utility facilities within the time frames listed above shall be sufficient cause to reject any claims by the Contractor for delays associated with utility relocation.

3.3 CONTRACTOR FIELD WORK REQUIREMENTS

A. The Contractor shall provide personnel, equipment, temporary facilities, construction materials, tools, and supplies at the Work Site whenever scheduled for general utility location and protection requirements, subject to the following:
   1. The Contractor shall pothole and physically locate all utilities under or within 2 feet horizontally of any footings.
   2. The Contractor shall notify utility owner when excavating within 5 feet of any natural gas pipeline. The Contractor shall hand-dig within 5 feet of any natural gas pipeline and, where required, protect the area with secured fencing.
   3. The Contractor shall notify utility owner when excavating within 5 feet of any oil pipeline and, if required, provide standby personnel. The Contractor shall hand-dig within 5 feet of any oil pipeline.
   4. The Contractor shall notify utility owner when excavating within 5 feet of any electrical facility and, if required, provide standby personnel. The Contractor shall hand-dig within 5 feet of any electrical facility.
   5. The Contractor shall notify utility owner when excavating within 5 feet of telephone, cable television or fiber optic facilities. The Contractor shall hand-dig within 5 feet of telephone, cable television or fiber optic facilities.

6. The Contractor shall comply with all requirements set forth by respective utility owner which may be more stringent than described herein.

B. All utilities, unless otherwise indicated, shall remain in operation during construction. The Contractor shall be liable for any injury, line breakage, and damage.

C. At the time of NTP or Project kick-off meeting, SANBAG shall provide telephone numbers for entities to be contacted in case of emergency. The Contractor shall ensure that personnel stationed at the site of the Work have immediate access to these telephone numbers.

PART 4 - MEASUREMENT AND PAYMENT

A. Work of this Section is considered incidental to Work under other payment items and no separate measurement or payment will be made to the Contractor for Work of this Section.

END OF SECTION

EXHIBIT
PROJECT UTILITY RESPONSIBILITIES

UTILITY RELOCATIONS/REARRANGEMENT

REFERENCE SPECIFICATION SECTION: _____

CONTACTS AND RESPONSIBILITIES

Name of Utility:

Contact Person:

Address:

Phone:

Email:

PERFORMANCE RESPONSIBILITY	PAYMENT RESPONSIBLITY
Design done by: _____	_____
Construction by: _____	_____
Inspection by: _____	_____

☐ Yes ☐ No Third Party Coordination and paid by: SANBAG

NOTES:

SECTION 01 21 00
ALLOWANCES

PART 1 - GENERAL

1.1 SUMMARY

A. This Section includes administrative and procedural requirements governing allowances. Certain items are specified in the Contract Documents by allowances which are established in lieu of additional requirements and to defer selection of actual materials, products or equipment to a later date when direction will be provided to the Contractor. If necessary, additional requirements will be issued by Change Order.

B. Allowances may be stated as unit prices or as lump sum amounts, as noted herein. Approval of final quantities required and the basis for acceptable pricing for items specified by an allowance shall be the sole responsibility of SANBAG prior to payment.

1.2 RELATED REQUIREMENTS

A. Section 01 22 00 - Unit Prices and Lump Sum Prices.

B. Section 01 22 05 – Lump Sum Prices

1.3 SELECTION AND PURCHASE

A. At the earliest practical date after award of the Contract, advise SANBAG of the date when final selection and purchase of each product or system described by an allowance must be completed to avoid delaying the Work.

B. When specified or at SANBAG's request, obtain proposals and prepare detailed pricing for each allowance for use in making final selections. Include recommendations that are relevant to performing the Work.

C. Purchase products and systems selected by SANBAG from the designated supplier.

1.4 ACTION SUBMITTALS

A. Submit proposals for purchase of products, equipment, facilities, systems or for payment of services included in allowances, in the form and detail specified for Change Orders. SANBAG will review the Contractor's information relevant to the proposed price including all pricing documentation supporting quotations from vendors, calculations, estimating factors, risk analyses, equipment rates, productivity, as well as any other items reasonably required by SANBAG to satisfy itself as to the reasonableness of the Contractor's assumptions used to determine price.

1.5 INFORMATIONAL SUBMITTALS

A. Submit invoices or delivery slips to show actual quantities of materials delivered to the site for use in fulfillment of each allowance.

B. Submit time sheets and other documentation to show labor time and cost for installation of allowance items that include installation as part of the allowance.

C. Coordinate and process submittals for allowance items in the same manner as for other portions of the Work.

1.6 LUMP SUM, UNIT COST, AND QUANTITY ALLOWANCES

A. Allowances shall include the cost to the Contractor of specific products and materials ordered or selected by SANBAG under the allowance, and shall include taxes, insurance, freight, and delivery to the Project site.

B. Whenever the actual cost of the materials, products, or equipment is more or less than the allowance amount, the Contract Price will be finally adjusted to reflect the actual cost without markup.

C. Unused Materials: After installation has been completed and accepted, return unused materials purchased under an allowance to the manufacturer or supplier for credit to SANBAG or if requested by SANBAG, retain and prepare unused material for storage by SANBAG. Deliver unused material to SANBAG's storage space as directed. Deposits paid and refunds later returned to Contractor shall be fully credited to SANBAG.

D. Quantity allowances include all costs of materials, labor, equipment, overhead, profit, all taxes, insurance, freight, delivery, and all other charges for the allowance. In the event a lesser or greater quantity of the allowance item is used, the Contract Price shall be finally adjusted to reflect the actual quantities at the Contract unit prices.

1.7 FINAL ADJUSTMENT OF ALLOWANCES

A. Allowance Adjustment: To adjust allowance amounts, SANBAG shall pay the difference between the actual cost incurred and the allowance amount.

B. Include installation costs where indicated as part of the allowance.

C. Submit substantiation of a change in scope of work, if any, claimed in Change Orders related to unit cost and lump sum allowances. SANBAG reserves the right to establish the quantity of work-in-place by independent quantity survey, measure, or count.

PART 2 - PRODUCTS (NOT USED)

PART 3 - EXECUTION

3.1 EXAMINATION

A. Examine products covered by an allowance promptly on delivery for damage or defects. Return damaged or defective products to the manufacturer for replacement.

3.2 PREPARATION

A. Coordinate materials and their installation such that each allowance item is completely integrated and interfaced with related Work. Furnish templates as required to coordinate installation.

PART 4 - MEASUREMENT AND PAYMENT

A. The Contractor shall maintain such records, as SANBAG deems sufficient to substantiate the direct cost of Allowance Work. Itemize all costs for labor, materials, and equipment and report the total of costs to date for the Allowance Work. The reports shall include names, hours worked, and rates of pay for all labor classifications (excluding general foreman) that are engaged in the actual direct performance of the Work.

END OF SECTION

This page intentionally left blank.

SECTION 01 22 05
LUMP SUM PRICES

PART 1 - GENERAL

1.1 SUMMARY

A. This Section includes administrative and procedural requirements for Lump Sum Prices which are contract items in the Bid Item List. Lump Sum Prices include the costs of all materials, equipment, labor, delivery, shipping charges, unloading, handling, installation, overhead and profit, taxes, insurance, and other direct and indirect costs.

1.2 RELATED REQUIREMENTS

A. Section 01 21 00 - Allowances

B. Section 01 22 00 - Unit Prices.

1.3 PROCEDURES

A. The Contactor's performance of the Work for which lump sum payments will be made shall be listed in the Schedule of Contract Values. Payment for each lump sum contract item provides full compensation to execute and complete the Work covered by each contract item in accordance with the Contract Documents.

B. Where Lump Sum Price contract items require related Work specified in other Sections of the Contract Documents, but which is not specifically mentioned in the Lump Sum Price description, the Contractor shall consider the related Work incidental to the total Contract Price.

PART 2 - PRODUCTS (NOT USED)

PART 3 - EXECUTION (NOT USED)

PART 4 - MEASUREMENT AND PAYMENT

A. Progress payment will be made based on percentage completion of individual Lump Sum contract items established on the Bid Item List. For the purposes of measuring the percentage completion, the Contractor shall provide a measurable quantity breakdown for each contract item for which payment is requested. SANBAG must pre-approve Contractor's quantity breakdown before making partial payment.

END OF SECTION

This page intentionally left blank.

SECTION 01 22 00
UNIT PRICES

PART 1 - GENERAL

1.1 SUMMARY

A. This Section includes administrative and procedural requirements for Unit Prices. Unit Prices are amounts stated on the Bid Item List that represent full compensation for all materials, equipment, labor, delivery, shipping charges, unloading, handling, installation, overhead and profit, taxes, insurance, and other direct and indirect costs.

1.2 RELATED REQUIREMENTS

A. Section 01 21 00 - Allowances.

B. Section 01 22 05 – Lump Sum Prices.

1.3 PROCEDURES

A. The Contactor's performance of the Work for which lump sum payments will be made shall be listed in the Schedule of Contract Values. Payment for each lump sum contract item provides full compensation to execute and complete the Work covered by each contract item in accordance with the Contract Documents.

B. SANBAG reserves the right to reject the Contractor's measurement of work-in-place that involves use of established Unit Prices, and to have this work measured by SANBAG or an independent surveyor acceptable to the Contractor. If the Contractor's measurement is determined to be inaccurate, the Contractor shall bear the cost of this SANBAG quantity survey. If the Contractor's measurement is confirmed as accurate, SANBAG shall bear the cost of the quantity survey.

C. Specification Sections referenced in the Bid Item List for each Unit Price describe requirements for materials, installation, and quality.

PART 2 - PRODUCTS (NOT USED)

PART 3 - EXECUTION (NOT USED)

PART 4 - MEASUREMENT AND PAYMENT

A. Progress payment will be made based on the quantity of units completed at the unit cost established on the Bid Item List. For the purposes of measuring the quantity of units completed, the Contractor shall provide a measurable quantity breakdown for each contract item for which payment is requested. SANBAG must pre-approve Contractor's quantity breakdown before making partial payment.

END OF SECTION

This page intentionally left blank.

SECTION 01 23 50
TIME RELATED OVERHEAD

PART 1 - GENERAL

1.1 SUMMARY

A. This Section specifies administrative and procedural requirements relative to Time-Related Overhead associated with monthly progress payments and Contract change orders.

1.2 RELATED REQUIREMENTS

A. Section 01 24 13, Value Engineering Change Proposals

B. Section 01 31 99, Contract Time

C. Section 01 77 00, Substantial Completion

1.3 DEFINITIONS

A. Time-related Overhead: Time-related overhead shall consist of those overhead costs, including field office and home office overhead, incurred as a result of performing Work during the contractual Period of Performance or SANBAG authorized additional time to the Period of Performance required to complete the Work. Time-related overhead excludes costs that are not related to time, including but not limited to mobilization, licenses, and permits. Time-related overhead shall not apply to non-compensable time extensions, Subcontractors of any tier, suppliers, fabricators, manufacturers, or other entities associated with the Contractor.

B. Field Office Overhead: Time-related costs of field office overhead include, but are not limited to, salaries, benefits, and equipment costs of project managers, general superintendents, field office managers, and other field office staff assigned to the Project, as well as rent, utilities, maintenance, security, supplies, and equipment costs of the field office.

C. Home Office Overhead: Home office overhead refers to the costs of operating the Contractor's business. These costs include, but are not limited to, salaries, benefits, and equipment costs of general administration, insurance, personnel and subcontract administration, purchasing, accounting, and project management and estimating.

D. Contract Time: As defined in the Contract, the Contract Time is the original duration of the Contract in calendar days, subject to approved Change Order(s) adjusting Contract Time (see also Section 01 31 99, Contract Time).

E. Working Day: Notwithstanding other provisions to the contrary, no construction work shall be performed on Saturdays, Sundays, or holidays recognized under the Contractor’s labor agreements and no construction work shall be performed outside of normal working hours without expressed written consent of SANBAG.

1.4 PERIOD OF PERFORMANCE

A. The first working day for the purpose of measuring time-related overhead shall be the effective date of the Notice to Proceed authorizing job-site mobilization

B. The last working day for the purpose of measuring time-related overhead shall be the Date of Substantial Completion.

C. The maximum number of working days shall be 130.

1.5 INCREASE AND DECREASES IN TIME-RELATED OVERHEAD

A. One day of time-related overhead will be paid for every working day designated in Specification Section 01 31 99, Contract Time. Calculation of time-related overhead costs will be based on working days with a corresponding adjustment in calendar days for Contract Time. Any adjustments must satisfy at least one of the following criteria:
   1. Suspensions of work ordered in conformance with the Contract except:
      a. Suspensions of work prior to NTP.
      b. Suspensions ordered due to the failure on the part of the Contractor to carry out orders given, or to perform the provisions of the Contract.
      c. Suspensions ordered due to factors beyond the control of and not caused by SANBAG or the Contractor, for which the Contractor is granted extensions of time in conformance with the provisions of the Specification Section 01 31 99, Contract Time.
      d. Other suspensions that mutually benefit SANBAG and the Contractor.
   2. Adjustments of Contract Time granted by SANBAG in conformance with the provisions and set forth in approved contract change orders.

B. In the event an early completion progress schedule proposed by the Contractor and approved by SANBAG, the amount of time-related overhead eligible for payment will be based on the reduced number of working days for the Project as approved by SANBAG.

1.6 VECP AND TIME-RELATED OVERHEAD

A. The quantity of time-related overhead associated with a reduction in Contract Time for cost reduction incentive proposals accepted and executed in conformance with Section 01 24 13, Value Engineering Change Proposals (VECP) shall be considered a construction cost attributable to the resultant estimated net savings.

1.7 EXCESS TIME-RELATED OVERHEAD AND AUDIT

A. If the final quantity of time-related overhead days exceeds the original bid quantity by more than 50 percent, the Contractor shall, within 60 days of SANBAG's written request, submit to SANBAG an audit examination and report performed by an independent certified public accountant of the Contractor's actual overhead costs. The audit examination and report shall depict the Contractor's project and companywide financial records and shall specify the actual overall average daily rates for both field office and home office overhead for the entire duration of the project, and whether the costs have been properly allocated. The rates of field office and home office overhead shall exclude unallowable costs as determined in the Federal Acquisition Regulations, 48 CFR, Chapter 1, Part 31.

B. Independent audit examinations by a certified public accountant shall be performed in conformance with the requirements of the American Institute of Certified Public Accountants Attestation Standards. Audit examinations and reports shall determine if the rates of field office and home office overhead are
   1. Allowable in conformance with the requirements of the Federal Acquisition Regulations, 48 CFR, Chapter 1, Part 31.
   2. Adequately supported by reliable documentation.
   3. Related solely to the project under examination.

C. The actual rate of time-related overhead specified in the audit, and submitted by the Contractor, will be subject to approval by SANBAG.

D. When requested by SANBAG, the cost of performing an independent certified public accountant audit examination and submitting the report will be borne equally by SANBAG and the Contractor. The cost of performing an audit examination and submitting the independent certified public accountant audit report for overhead claims other than for the purpose of verifying the actual rate of time-related overhead shall be entirely borne by the Contractor. The cost of performing an audit examination and submitting the independent certified public accountant audit report to verify actual overhead costs incurred prior to the first working day shall be entirely borne by the Contractor.

PART 2 - PRODUCTS (NOT USED)

PART 3 - EXECUTION (NOT USED)

PART 4 - MEASUREMENT AND PAYMENT

4.1 MEASUREMENT AND PAYMENT OF TIME-RELATED OVERHEAD

A. For the purpose of progress payments, the number of working days to be paid for Time-Related Overhead contract item in each monthly payment cycle will be the number of working days for that month. Working days granted by contract change order will be paid for upon completion of the Contract.

B. Provisions relating to increased or decreased Unit Price quantities shall not apply to the Time-Related Overhead contract item.

END OF SECTION

This page intentionally left blank.

SECTION 01 24 13
VALUE ENGINEERING CHANGE PROPOSALS (VECP)

PART 1 - GENERAL

1.1 SUMMARY

A. This Section includes administrative and procedural requirements for Value Engineering Change Proposals (VECPs) by the Contractor. SANBAG encourages the Contractor to submit VECPs whenever the Contractor identifies areas or instances in which improvements can be made, in order to achieve Project cost savings.

1.2 VECP REQUESTS

A. This Section applies to the Contractor-developed and documented VECP that:
   1. Requires a change to the Contract
   2. Reduces the total Contract Price without impairing essential functions or characteristics of the Work, providing that it is not based solely on a Change in specified quantities
   3. Results in an estimated net savings to SANBAG equal or greater than $25,000

B. The Contractor is encouraged to combine multiple VECPs into one request for efficiency purposes.

C. Any VECP shall comply with SCRRA, City, County and all applicable standards of governing agency or company.

D. At a minimum, the following information shall be submitted by the Contractor with each VECP:
   1. Description of the existing Contract requirements that are involved in the proposed Change.
   2. Description of the proposed Change, and all Specifications or Plans necessary for the complete evaluation of the proposed Change.
   3. Discussion of differences between existing requirements and the proposed change, together with advantages and disadvantages of each changed item.
   4. Itemization of the Contract requirements that must be changed if the VECP is accepted (e.g., plan numbers and specifications).
   5. Justification for changes in function or characteristics of each affected item, and the effect of the Change on the performance of the end item.
   6. Date by which a Change Order adopting the VECP must be issued in order to obtain the maximum cost reduction, noting any effect on Contract completion time or delivery schedule.
   7. Cost estimate for existing Contract requirements correlated to the Contractor's lump-sum breakdown and the proposed changes in those requirements, including costs of development and implementation by the Contractor.

E. The Contractor shall submit VECPs to SANBAG. SANBAG will process proposals, but shall not be liable for any delay in acting upon any proposal submitted pursuant to this Section. The Contractor may withdraw all or part of any VECP at any time prior to acceptance by SANBAG, but will, at the sole discretion of SANBAG, be liable for costs incurred by SANBAG in reviewing the proposal. The decision of SANBAG as to the rejection or acceptance of any VECP shall be at the sole discretion of SANBAG.

F. At its sole discretion, SANBAG may accept, in whole or in part and by Change Order, any VECP submitted pursuant to this Section. Designs for accepted VECPs will be accepted by SANBAG for incorporation into the Plans and Specifications. Until a Change Order is executed authorizing the VECP, the Contractor shall remain obligated to perform in accordance with the Contract.

G. If a VECP submitted by the Contractor pursuant to this Section is accepted by SANBAG, the Total Contract Price shall be adjusted based upon an equal sharing of the net savings by the Contractor and SANBAG (50 percent SANBAG, 50 percent Contractor).
   1. Net savings are defined as gross savings less the Contractor's costs and less SANBAG's costs.
   2. Estimated gross savings to the Contractor means the difference between the cost of performing the Work according to the existing requirement and the cost to perform the Work according to the proposed Change. In each instance, the Contractor's profit shall not be considered part of the cost.
   3. The Contractor's costs means reasonable costs incurred by the Contractor in preparing the VECP and making the Change, such as cancellation or restocking charges.
   4. SANBAG's costs means reasonable costs incurred by SANBAG for evaluating and implementing the VECP, such as testing, redesign, and the effect on other contracts.
   5. The Contractor is not entitled to share in concurrent, collateral, or future contract savings. Collateral savings are those measurable net reductions in SANBAG's costs of operation that result from the VECP, including maintenance, logistics, and SANBAG furnished property. Concurrent contract savings cover the reductions in the cost of performance of other contracts the Contractor is participating in, for essentially the same item resulting from a VECP submitted by the Contractor.
   6. The Contractor's profit shall not be reduced by application of the VECP.

H. The Contractor shall include appropriate VECP provisions in all Subcontracts.

I. Within the limits stated in the Contract, the Contractor may restrict SANBAG's right to use any part of a VECP or the supporting data thereof in accordance with the terms of the following:
   1. Data supplied pursuant to the Section entitled VALUE ENGINEERING CHANGE PROPOSALS (VECP) in this Contract shall not be disclosed to any outside person or agency, or duplicated, used, or disclosed, in whole or in part, for any purpose other than to evaluate a VECP submitted under said Section.
   2. This restriction does not limit SANBAG's right to use information contained in this VECP if it is or has been obtained, or is otherwise available, from the Contractor or from another source without limitations.
   3. If a VECP is accepted by SANBAG after the use of the data in an evaluation, SANBAG may duplicate, use, or disclose any data reasonably necessary to the full utilization of the VECP, as accepted, in any manner and for any purpose whatsoever; SANBAG may allow others to do so as well.

PART 2 - PRODUCTS (NOT USED)

PART 3 - EXECUTION (NOT USED)

PART 4 - MEASUREMENT AND PAYMENT

A. Work of this Section is considered incidental to Work under other payment items and no separate measurement or payment will be made to the Contractor for Work of this Section.

END OF SECTION

SECTION 01 25 00
SUBSTITUTION PROCEDURES

PART 1 - GENERAL

1.1 SUMMARY

A. This Section includes administrative and procedural requirements for substitutions which are the Contractor proposed changes in products, materials, equipment, and methods of construction from those required by the Contract Documents.

1.2 RELATED REQUIREMENTS

A. Section 01 33 00 - Submittal Procedures.

B. Section 01 40 00 - Quality Requirements.

C. Section 01 60 00 -,Product Requirements.

1.3 SUBSTITUTION FOR SPECIFIED PRODUCTS

A. The Contract Documents, including Contract Plans and Specifications have been prepared to complement and accommodate certain specified equipment, products or systems, and any modifications, adjustments, or redesign required to assimilate any SANBAG approved substitution of "or equivalent" equipment, products, or systems shall be at the Contractor's sole expense. The Contractor shall provide a complete and workable application and shall satisfy design criteria and aesthetic values to the sole satisfaction of SANBAG. The Contract Time for completion of the Work specified in the Contract Documents shall not be increased by any circumstances whatsoever arising from the provisions of this Specification.

1.4 EQUIVALENTS

A. Except as may be provided in the Special Conditions, or stated otherwise in the various sections of the Specifications, whenever any material, product, thing, or service is specified or indicated in the Contract Documents by brand, trade, patent, or proprietary name or by the name of the manufacturer, the item so specified or indicated shall be deemed to be followed by the words "or equivalent."

B. During bidding, the Contractor may at its own risk, submit an item not specified in the Contract Documents as an "or equivalent" for consideration by SANBAG. Failure to do so within the time frame described in the Instructions to Bidders shall bar the Contractor from proposing or substituting an "or equivalent" item for an item specified in the Contract Documents.

C. If the Contractor submits an "or equivalent" item, the Contractor must submit sufficient data to SANBAG to substantiate the specific characteristics and qualities that make the "or equivalent" item the equivalent, as described in the paragraph below. The Contractor shall furnish such substantiating data or arrange for any necessary tests to verify the equivalent qualities of the "or equivalent" item at the Contractor's sole expense.

D. SANBAG, in its sole discretion, shall determine whether the substantiating data demonstrates that an "or equivalent" item is equivalent in all respects to the item specified in the Contract Documents. If SANBAG determines that the "or equivalent" item has not been substantiated to be equivalent in all respects, the item specified in the Contract Documents shall be furnished and installed by the Contractor, without modification of the cost proposal amount or Contract Documents.

1.5 SUBSTITUTION REQUESTS

A. The Contractor shall submit four copies of each request for consideration identifying product or fabrication or installation method to be replaced. Include Specification section number and title and plan sheet number and title. Indicate type of substitution:
   1. Substitutions for Cause: Changes proposed by the Contractor that are required due to changed Project conditions, such as unavailability of product, regulatory changes, or unavailability of required warranty terms.
   2. Substitutions Required Because of Federal Government Restrictions: Changes proposed by the Contractor that result from Federal Government restrictions or other causes growing out of the national defense or war programs.
   3. Substitutions for Lack of Availability: Changes proposed by the Contractor because certain materials or equipment specified are entirely unobtainable or not obtainable in sufficient quantities or within a reasonable time.
   4. Substitutions for Convenience: Changes proposed by the Contractor or SANBAG that are not required in order to meet other Project requirements, but may offer advantage to the Contractor or SANBAG.

B. Documentation: Show compliance with requirements for substitutions and the following, as applicable:
   1. A statement indicating why the specified product or fabrication or installation cannot be provided, if applicable.
   2. Coordination information including a list of changes or revisions needed to other parts of the Work and to construction performed by SANBAG and separate contractors that will be necessary to accommodate the proposed substitution.
   3. A detailed comparison of significant qualities of the proposed substitution with those of the Work specified. Include an annotated copy of the applicable Specification section. Significant qualities may include attributes such as performance, weight, size, durability, visual effect, sustainable design characteristics, warranties, and specific features and requirements indicated. Indicate deviations, if any, from the Work specified.
   4. Product data, including plans and descriptions of products and fabrication and installation procedures.
   5. Samples, where applicable or requested.
   6. Certificates and qualification data, where applicable or requested.
   7. A list of similar installations for completed projects, with project names and addresses and the names and addresses of pertinent engineers and authorities.
   8. Material test reports from a qualified testing agency, indicating and interpreting test results for compliance with requirements indicated.
   9. Research reports demonstrating compliance with building codes in effect for the Project, from recognized testing laboratories or agencies, technical trade associations, and code authorities.
   10. A detailed comparison of the Contractor's construction schedule using the proposed substitution with products specified for the Work, including the effect on the overall Contract Time. If the specified product or method of construction cannot be provided within the Contract Time, include a letter from the manufacturer, on the manufacturer's letterhead, stating the date of receipt of the purchase order and attesting to the lack of availability or delays in delivery.
   11. Cost information, including a proposal of change (if any) in the Contract Price.
   12. The Contractor's certification that the proposed substitution complies with requirements in the Contract Documents, except as indicated in the substitution request; is compatible with related materials; and is appropriate for the indicated applications.
   13. The Contractor's waiver of right to claim additional payment or time that may subsequently become necessary because of any failure of the proposed substitution to produce indicated results.

C. SANBAG's Action: If necessary, SANBAG will request additional information or documentation for evaluation after receipt of a request for substitution. SANBAG will notify the Contractor of acceptance or rejection of a proposed substitution.
   1. Forms of Acceptance: Change Order, Change Notice, or Resident Engineer's Bulletin for minor changes in the Work.

PART 2 - PRODUCTS

2.1 SUBSTITUTIONS

A. Substitutions for Cause, Federal Government Restrictions or due to Lack of Availability: Submit requests for substitution immediately on discovery of need for change, but not later than 15 days prior to the time required for preparation and review of related submittals.

B. SANBAG will consider the Contractor's request for substitution when the following conditions are satisfied. If the following conditions are not satisfied, SANBAG will return requests without action, except to record noncompliance with these requirements:
   1. Requested substitution is consistent with the Contract Documents and will produce the indicated results.
   2. Requested substitution provides sustainable design characteristics that specified product provided.
   3. Substitution request is fully documented and properly submitted.
   4. Requested substitution will not adversely affect the Contractor's construction schedule.
   5. Requested substitution has received necessary approvals of authorities having jurisdiction.
   6. Requested substitution is compatible with other portions of the Work.
   7. Requested substitution has been coordinated with other portions of the Work.
   8. Requested substitution provides the specified warranty.
   9. If the requested substitution involves more than one Contractor, requested substitution has been coordinated with other portions of the Work, is uniform and consistent, is compatible with other products, and is acceptable to all Contractors involved.
   10. Any and all costs incurred by both parties, including reviews and design modifications, to implement the approved substitution and incorporate resultant changes into the Work shall be borne solely by the Contractor.

C. Substitutions for Convenience: SANBAG will consider requests for substitution if received within 45 days after the Notice of Award. Requests received after that time may be considered or rejected at the discretion of SANBAG. SANBAG will consider the Contractor's request for substitution when the conditions below are satisfied. If the following conditions are not satisfied, SANBAG will return requests without action, except to record noncompliance with these requirements:
   1. Requested substitution offers SANBAG a substantial advantage in cost, time, energy conservation, or other considerations, after deducting additional responsibilities SANBAG must assume. SANBAG's additional responsibilities may include compensation to SANBAG for redesign and evaluation services, increased cost of other construction by SANBAG, and similar considerations.
   2. Requested substitution does not require extensive revisions to the Contract Documents.
   3. Requested substitution is consistent with the Contract Documents and will produce the indicated results.
   4. Requested substitution provides sustainable design characteristics that the specified product provided.
   5. Substitution request is fully documented and properly submitted.
   6. Requested substitution will not adversely affect the Contractor's construction schedule.
   7. Requested substitution has received necessary approvals of authorities having jurisdiction.
   8. Requested substitution is compatible with other portions of the Work.

9. Requested substitution has been coordinated with other portions of the Work.
10. Requested substitution provides the specified warranty.
11. If requested substitution involves more than one Contractor, the requested substitution has been coordinated with other portions of the Work, is uniform and consistent, is compatible with other products, and is acceptable to all Contractors involved.

PART 3 - EXECUTION (NOT USED)

PART 4 - MEASUREMENT AND PAYMENT

A. Work of this Section is considered incidental to Work under other payment items and no separate measurement or payment will be made to the Contractor for Work of this Section.

END OF SECTION

SECTION 01 26 14
REQUEST FOR INFORMATION

PART 1 - GENERAL

1.1 SUMMARY

A. This Section covers the general requirements for the Contractor's Requests for Information (RFI) and pertains to all portions of the Contract Documents.

1.2 RELATED REQUIREMENTS

A. Section 01 11 13 - Work Covered by the Contract Documents.

B. Section 01 33 00 - Submittal Procedures.

1.3 REQUESTS FOR INFORMATION

A. The Contractor shall examine all Contract Documents; shall verify all figures in the Contract Documents before laying out the Work; shall promptly notify SANBAG of all errors, discrepancies, inconsistencies, or omissions that it discovers; and, in instances where such nonconformities are discovered, shall obtain specific instructions in writing from SANBAG by utilizing the RFI process before proceeding with the Work.

B. When the Contractor is unable to determine from the Contract Documents the exact material, process, or system to be installed, the Contractor shall request SANBAG to clarify the indeterminate item. Whenever possible, such clarification shall be requested at the next appropriate project meeting, with the response entered into the meeting minutes. When clarification at the meeting is not possible, either because of the urgency of the need or the complexity of the item, the Contractor shall prepare and submit a written RFI to SANBAG in the form and format established by SANBAG.

C. The Contractor's performance of work affected by such nonconformities prior to SANBAG's response shall be at the Contractor's risk; however, the Contractor shall continue to perform any incidental work not affected by the nonconformity.

D. In the event of any doubt or question concerning the true meaning of the Contract Documents, or should it appear that the Work to be done or any of the matters relative thereto are not sufficiently detailed or explained in the Contract Documents, the Contractor shall submit a RFI to SANBAG for such further written explanations as may be reasonably necessary, and shall conform to the written explanation given as if it were part of the Contract Documents. The decision of SANBAG in such cases shall be final.

E. RFIs shall be submitted on an agreed upon form approved by SANBAG. Forms shall be completely filled in, and, if prepared by hand, shall be fully legible after photocopying. Each page of attachments to RFIs shall bear the RFI number. Each RFI shall reference a plan number or a Specification Section. RFIs from Subcontractors or material suppliers shall be submitted through, reviewed by, and signed by the Contractor prior to submittal to SANBAG.

F. The Contractor shall submit RFIs in a timely manner to avoid delays to the Work. RFIs prepared and submitted by the Contractor shall be complete and shall include all information or references necessary for SANBAG to respond.

G. SANBAG will determine action required and will respond to each complete RFI. Allow 15 working days for SANBAG's response for each RFI. RFI's received by SANBAG after 1:00 p.m. will be considered as received the following working day.
   1. In the event that there are numerous RFIs pending, the Contractor shall cooperate with SANBAG in establishing a priority for responding to the RFIs.
   2. In the event that an RFI is reviewed by a third-party (including Railroad Operators and authorities having jurisdiction), allow up to an additional 10 working days time for SANBAG's response.
   3. SANBAG's response to RFI may include a request for additional information in which case SANBAG's time for response will date from time of receipt of additional information.

H. The Contractor shall not assert any claims for delay or interference against SANBAG if the Contractor fails to submit any RFI in a timely manner taking into account the time allowed for a response.

I. The response to an RFI shall not, by itself, constitute authorization for the Contractor to perform any Change Work that causes an adjustment to either the Contract Time or the Contract Price.

J. RFIs shall not be used for the following purposes:
   1. To request approval of submittals.
   2. To request approval of substitutions.
   3. To request changes that entail additional cost or credit.
   4. To request different methods of performing work other than those drawn or specified.

K. Neither answered nor un-answered RFIs shall be construed as approval to perform extra work or entitlement to adjust Contract Time or Contract Price.

   RFIs that cannot be answered due to lack of clarity or incomplete/insufficient information (as determined by SANBAG) will be rejected and returned to Contractor. It shall be the Contractor's sole responsibility to resubmit the RFI with all required information. SANBAG's time for response to the RFI will date from time of receipt of the revised RFI.

PART 2 - PRODUCTS (NOT USED)

PART 3 - EXECUTION (NOT USED)

PART 4 - MEASUREMENT AND PAYMENT

A. Work of this Section is considered incidental to Work under other payment items and no separate measurement or payment will be made to the Contractor for Work of this Section.

END OF SECTION

SECTION 01 29 73
SCHEDULE OF VALUES

PART 1 - GENERAL

1.1 SUMMARY

A. This Section specifies administrative and procedural requirements necessary to prepare and process the Schedule of Values.

1.2 RELATED REQUIREMENTS

A. Section 01 22 00 - Unit Prices and Lump Sum Prices.

1.3 DEFINITIONS

A. Schedule of Values: A tabulation furnished by the Contractor and approved by SANBAG, allocating portions of the Contract Price to various portions of the Work which shall be used as the basis for reviewing the Contractor's applications for payment.

1.4 SCHEDULE OF VALUES DEVELOPMENT

A. Coordinate preparation of the Schedule of Values with preparation of the Contractor's construction schedule.

B. Correlate line items in the Schedule of Values with other required administrative forms and schedules, including the following:
   1. Application for Payment forms with continuation sheets.
   2. Submittal schedule.
   3. Items required to be indicated as separate activities in the Contractor's construction schedule.

C. Where the Work is separated into phases requiring separately phased payments, provide values correlated with each phase of payment. Where the Contractor's construction schedule defines separate elements of the Work, provide values correlated with each element.

D. Provide a breakdown of the Contract Price in enough detail to facilitate continued evaluation of applications for payment and progress reports. Provide multiple line items for principal subcontract amounts in excess of one-half of one-percent of the Contract Price.

E. Each item of the Schedule of Values shall include its proportionate share of profit and all other expenses involved.
   1. The summation of extensions of quantities and unit prices and related costs shall equal the amount of the lump-sum price of the applicable Contract bid item indicated in the Schedule of Values.
   2. Round amounts to the nearest whole dollar; the total shall equal the Contract Price.
   3. Provide a separate line item in the Schedule of Values for mobilization and demobilization for each time and part and phase of the work where the Contractor is required to mobilize and demobilize its operations.
   4. Allowances: Provide a separate line item in the Schedule of Values for each allowance. Show line item value of unit-cost allowances, as a product of the unit cost, multiplied by measured quantity. Use information indicated in the Contract Documents to determine quantities.

5. Each item in the Schedule of Values and Applications for Payment shall be complete. Include total cost and proportionate share of general profit for each item.
6. Temporary facilities and other major cost items that are not direct cost of actual work in place may be shown either as separate line items in the Schedule of Values or distributed within the costs allocated to the total sum of the Schedule of Values

F. SANBAG will not approve the Schedule of Values if the amounts are unreasonable and unbalanced. The Contractor shall provide any supporting documentation necessary for SANBAG to determine acceptability.

PART 2 - PRODUCTS (NOT USED)

PART 3 - EXECUTION

3.1 PREPARATION

A. Preparation shall occur during the Limited Notice to Proceed. The Contractor shall submit to SANBAG a detailed Schedule of Values that must be approved by SANBAG prior to the Notice to Proceed.

3.2 APPROVAL

A. Upon approval by SANBAG, the Schedule of Values will form a basis for determining the compensation payable to the Contractor. Payment will be based on actual progress of Work.

3.3 REVIEW AND RESUBMITTAL

A. If review by SANBAG indicates that changes to the Schedule of Values are required, the Contractor shall revise and resubmit in the same manner as the original Schedule of Values was approved.

PART 4 - MEASUREMENT AND PAYMENT

A. Work of this Section is considered incidental to Work under other payment items and no separate measurement or payment will be made to the Contractor for Work of this Section.

END OF SECTION

SECTION 01 31 00
PROJECT MANAGEMENT AND COORDINATION

PART 1 - GENERAL

1.1 SUMMARY

A. This Section contains administrative provisions for coordinating construction operations.

1.2 GENERAL COORDINATION PROCEDURES

A. Coordinate construction operations included in different Sections of the Specifications to ensure efficient and orderly installation of each part of the Work. Coordinate construction operations, included in different Sections that depend on each other for proper installation, connection, and operation.
   1. Schedule construction operations in the sequence required to obtain the best results, where installation of one part of the Work depends on installation of other components, before or after its own installation.
   2. Coordinate installation of different components to ensure maximum performance and accessibility for required maintenance, service, and repair.
   3. Make adequate provisions to accommodate items scheduled for later installation.

B. Each Contractor shall coordinate its construction operations with those of other contractors and entities to ensure efficient and orderly installation of each part of the Work.

C. Prepare a Work Plan for submittal to SANBAG for any work requiring coordination with third parties or Railroad Operators and any work that might affect third parties or Railroad Operators' operations or facilities. Work Plan is considered a submittal that shall comply with all requirements of Section 01 33 00 Submittal Procedures.

D. Coordinate scheduling and timing of required administrative procedures with other construction activities to avoid conflicts and to ensure orderly progress of the Work. Such administrative activities include but are not limited to the following:
   1. Preparation of Contractor's construction schedule.
   2. Preparation of Contractor's Schedule of Values.
   3. Installation and removal of temporary facilities and controls.
   4. Delivery and processing of submittals.
   5. Progress meetings.
   6. Pre-installation conferences
   7. Project closeout activities.
   8. Startup and adjustment of systems (commissioning).

E. Coordinate construction activities to ensure that operations are carried out with consideration given to conservation of energy, water and materials. Coordinate use of temporary utilities to minimize waste.
   1. Salvage materials and equipment involved in performance of, but not actually incorporated into, the Work. See other sections of these Specifications for disposition of salvage materials that are designated to be owner's property.

1.3 PROJECT MEETINGS

A. General: SANBAG will schedule and conduct weekly meetings and conferences at the Work Site, unless otherwise indicated.

B. Pre-Construction Conference: SANBAG will schedule and conduct a pre-construction conference before starting construction, at a time convenient to all attendees.
   1. Conference will review responsibilities and personnel assignments.
   2. Attendees: Authorized representatives of SANBAG and their consultants; authorized representatives of Railroad Operators; the Contractor and its superintendent; major Subcontractors; suppliers; and other concerned parties shall attend the conference. Participants at the conference shall be familiar with the Project and authorized to conclude matters relating to the Work.
   3. Agenda: Discuss items of significance that could affect progress. Possible agenda items include:
      a. Construction safety
      b. Tentative construction schedule, Critical work sequencing and long-lead items.
      c. Interface with ongoing OmniTrans operations
      d. Emergency procedures and contact information.
      e. Phasing.
      f. Site access and the Contractor's on-site laydown, storage and staging areas.
      g. Designation of key personnel and their duties.
      h. Lines of communications.
      i. Procedures for processing field directives and Change Orders.
      j. Procedures for RFIs.
      k. Procedures for testing and inspecting.
      l. Procedures for processing Applications for Payment.
      m. Distribution of the Contract Documents.
      n. Submittal procedures.
      o. Sustainable design requirements.
      p. Preparation of record documents.
      q. Use of the premises and existing buildings.
      r. Work restrictions.
      s. Working hours.
      t. Owners' occupancy requirements.
      u. Responsibility for temporary facilities and controls.
      v. Procedures for moisture and mold control.
      w. Procedures for disruptions and shutdowns.
      x. Construction waste management and recycling.
      y. Parking availability.
      z. Office, work, and storage areas.
      aa. Equipment deliveries and priorities.
      bb. First aid.
      cc. Security.
      dd. Progress cleaning.

C. Pre-installation Conferences: Conduct a pre-installation conference at the Work Site before each construction activity that requires coordination with other construction.
   1. Attendees: Installer and representatives of manufacturers and fabricators involved in or affected by the installation and its coordination or integration with other materials and installations that have preceded or will follow, shall attend the meeting. Advise SANBAG of scheduled meeting dates.
   2. Agenda: Review progress of other construction activities and preparations for the particular activity under consideration, which may include the following:
      a. Contract Documents.
      b. Options.
      c. Related RFIs.
      d. Related Change Orders.
      e. Purchases.
      f. Deliveries.

g. Submittals.
h. Review of mockups.
i. Possible conflicts.
j. Compatibility requirements.
k. Time schedules.
l. Weather limitations.
m. Manufacturer's written recommendations.
n. Warranty requirements.
o. Compatibility of materials.
p. Acceptability of substrates.
q. Temporary facilities and controls.
r. Space and access limitations.
s. Site Specific Work Plans
t. Availability of work crews
u. Availability of equipment
v. Availability of material
w. Contingency Plans
x. Regulations of authorities having jurisdiction.
y. Testing and inspecting requirements.
z. Installation procedures.
aa. Coordination with other work.
bb. Required performance results.
cc. Protection of adjacent work.
dd. Protection of construction and personnel.
ee. Construction Safety and Roadway Worker Protection.

3. Record significant conference discussions, agreements, and disagreements, including required corrective measures and actions.
4. Reporting: Distribute minutes of the meeting to each party present, SANBAG, and to other parties requiring information.
5. Do not proceed with installation if the conference cannot be successfully concluded. Initiate whatever actions are necessary to resolve impediments to performance of the Work, and reconvene the conference at earliest feasible date.

D. Project Closeout Conference: SANBAG will schedule and conduct a Project closeout conference, at a time convenient to all attendees.,
1. Attend the conference to review requirements and responsibilities related to Project closeout.
2. Attendees: Authorized representatives of SANBAG and their consultants; the Contractor and its project manager; major Subcontractors; Suppliers; and other concerned parties shall attend the meeting. Participants at the meeting shall be familiar with the Project and authorized to conclude matters relating to the Work.
3. Agenda: Discuss items of significance that could affect or delay Project closeout, including the following:
a. Preparation of record documents.
b. Procedures required prior to inspection for Substantial Completion and for final inspection for acceptance.
c. Submittal of written warranties.
d. Requirements for preparing operations and maintenance data.
e. Requirements for demonstration and training.
f. Preparation of the Contractor's punch list.
g. Procedures for processing Applications for Payment at Substantial Completion and for final payment.
h. Submittal procedures.
i. Coordination of separate contracts.
j. Owners' partial occupancy requirements.

k. Installation of Owners' furniture, fixtures, and equipment.
l. Responsibility for removing temporary facilities and controls.

E. Progress Meetings: SANBAG will conduct progress meetings at regular weekly intervals.
1. Attendance by Contractor's Project Manager and Site Superintendent as well as key Subcontractors (when appropriate) is mandatory on a weekly basis.
2. Attendees: In addition to representatives of SANBAG, each Contractor, Subcontractor, supplier, and other entity concerned with current progress or involved in planning, coordination, or performance of future activities shall be represented at these meetings. All participants at the meeting shall be familiar with the Project and authorized to conclude matters relating to the Work.
3. Agenda: Review and correct or approve minutes of previous progress meeting. Review other items of significance that could affect progress. Include topics for discussion as appropriate to the status of the Project.
   a. Safety
   b. Progress and Schedule: Review progress since the last meeting. Determine whether each activity is on time, ahead of schedule, or behind schedule in relation to the Contractor's construction schedule. Determine how construction that has fallen behind schedule will be remedied; secure commitments from parties involved to do so. Discuss whether schedule revisions are required to ensure that current and subsequent activities will be completed within the Contract Time.
   c. Review the schedule for the next period.
   d. Review present and future needs of each entity present, which may include the following:
      1) Interface requirements.
      2) Sequence of operations.
      3) Status of submittals.
      4) Deliveries.
      5) Off-site fabrication.
      6) Access.
      7) Site utilization.
      8) Temporary facilities and controls.
      9) Progress cleaning.
      10) Quality and work standards.
      11) Status of correction of deficient items.
      12) Field observations.
      13) Status of RFIs.
      14) Status of proposal requests.
      15) Pending changes.
      16) Status of Change Orders.
      17) Pending claims and disputes.
      18) Documentation of information for payment requests.

PART 2 - PRODUCTS (NOT USED)

PART 3 - EXECUTION (NOT USED)

PART 4 - MEASUREMENT AND PAYMENT

A. Work of this Section is considered incidental to Work under other payment items and no separate measurement or payment will be made to the Contractor for Work of this Section.

END OF SECTION

This page intentionally left blank.

SECTION 01 31 99
CONTRACT TIME

PART 1 - GENERAL

1.1 SUMMARY

A. This Section includes administrative and procedural requirements for a two-step Notice-to-Proceed process, and defines allowable conditions for Contract Time extensions.

1.2 RELATED REQUIREMENTS

A. Section 01 23 50 – Time Related Overhead

B. Section 01 29 73 - Schedule of Values.

C. Section 01 33 00 - Submittal Procedures.

D. Contract Special Conditions Section 4 – Commencement of the Work.

1.3 DEFINITIONS

A. Notice to Proceed (NTP): SANBAG written authorization to proceed with all or portions of the Work, as specified.

B. Contract Time: As defined in the Contract, the Contract Time is the original duration of the Contract in working days, subject to approved Change Order(s) adjusting Contract Time. Contract Time is measured in working days. Contract Time begins on the effective date of NTP and ends on the certified date of Substantial Completion. Special Conditions to Contract stipulate the number of days for Contract Time.

1.4 COMMENCEMENT OF WORK

A. SANBAG will issue a Notice to Proceed (NTP). NTP issuance constitutes formal notice for the Contractor to proceed with remainder of Work and to diligently prosecute completion within Contract Time. The Contractor is not authorized to perform any work until the Contractor has received the NTP. Should the Contractor begin work in advance of receiving the NTP, such work shall have been done at the Contractor's own risk. The NTP will initiate Contract Time and will constitute specified tasks and deliverables required in the Contract Documents.

1.5 CONTRACT TIME

A. The date of the NTP is the commencement date for Contract Time.

B. The Contract Time is 130 Working Days after the NTP.

1.6 DELAYS AND TIME EXTENSIONS

A. Delays beyond the Contractor's control: The Contractor will be granted a time extension and will not be assessed with liquidated damages for any delay in substantially completing the Work (or parts thereof) beyond the time set forth in the Contract, provided that such delay was caused by unforeseeable causes beyond the control and without the fault or negligence of the Contractor. Examples of such causes include acts of a public enemy, fire, floods, adverse weather, tidal waves, earthquakes, hurricanes, epidemics, quarantine restrictions, strikes, labor disputes and freight embargoes, or negligent acts of SANBAG.

B. SANBAG caused delays: In the event the Contractor is delayed by any act or omission on the part of SANBAG (as determined by SANBAG), and provided that the Contractor notifies SANBAG in writing within 5 days from the beginning of any such delay, specifying the act or omission causing such delay, the time for completion of the Work may be extended at the sole discretion of SANBAG. Any time extension is contingent on all of the following:
   1. That the cause is not due to the fault or negligence of the Contractor and the Contractor has taken reasonable precautions to prevent the delays and minimize the effects thereof.
   2. That the Contractor submits a Request for Change (RFC) specifying the nature of the delay and the measures that have been or will be taken to prevent or minimize the delay. Failure to submit written notice within 5 days from the beginning of any such delay shall constitute an absolute waiver of any claim for a time extension. The RFC submitted by the Contractor shall also include a Time Impact Analysis.
   3. No time extension shall be granted under this Section for any SANBAG caused delay in which (1) the performance of Work would have been concurrently delayed by the Contractor induced causes, including an act or omission of the Contractor or its Subcontractors, or (2) remedies are included or excluded by any other provision of the Contract. Only the actual delay resulting from the causes specified in this Section shall be grounds for a time extension. No time extension shall be granted for a delay caused by a shortage of materials unless the Contractor furnishes to SANBAG (a) documentary proof that the Contractor has diligently made every effort to obtain such materials from all known sources, and (b) schedule changes as required under Section 01 32 17, Construction Project Schedule, that the construction schedule critical path was impacted, and could not be mitigated by re-sequencing the Contractor's operations.
   4. The term "shortage of materials," as used in this Section, shall apply only to materials, articles, parts, or equipment that are not custom items; it shall not apply to equipment, materials, parts, or articles that are processed, made, constructed, fabricated, or manufactured to meet the specific requirements of the Contract Documents.

C. Time Extensions for Critical Path activities only: When time extensions are granted, they shall be limited to the period equivalent to the actual number of days lost on Critical Path activities. All requests for time extensions shall be supported with a Time Impact Analysis (TIA) showing the Critical Path and impacts on it. The Contractor's failure to submit this analysis will be sufficient cause for denial of any request for a time extension.

D. A time extension granted shall not release the Contractor's surety from its obligations. Work shall continue and be carried on in accordance with all provisions of the Contract. The Contract shall remain in full force and effect during the continuance and until completion and acceptance of the Work covered by the Contract, unless formally suspended or terminated in accordance with the terms of the Contract. Permitting the Contractor to finish the Work, or any part thereof, after the time fixed for completion (or after the date to which the time for completion may have been extended), and/or making payments to the Contractor after any such periods, shall not constitute a waiver on the part of SANBAG of any rights under the Contract.

E. Neither the granting of a time extension beyond the date fixed for the completion of any part of the Work nor the performance and acceptance of any part of the Work after the time specified for the completion of the Work shall be deemed to be a waiver by SANBAG of SANBAG's right to terminate the Contract for abandonment or failure to complete within the time specified, or to impose and deduct damages as may be specified.

PART 2 - PRODUCTS (NOT USED)

PART 3 - EXECUTION (NOT USED)

PART 4 - MEASUREMENT AND PAYMENT

A. Work of this Section is considered incidental to Work under other payment items and no separate measurement or payment will be made to the Contractor for Work of this Section.

END OF SECTION

This page intentionally left blank.

SECTION 01 32 15
CONSTRUCTION PROJECT SCHEDULE (SMALL PROJECTS)

PART 1 - GENERAL

1.1 SUMMARY

A. This section includes requirements for preparing, submitting, revising, and updating project scheduling information. The purpose of this section is to ensure adequate planning and execution of the Work by the Contractor, and establish a standard against which satisfactory completion of the Project can be measured by SANBAG, providing justification for progress payments.

1.2 RELATED REQUIREMENTS

A. Section 01 29 73 - Schedule of Values.

B. Section 01 31 99 – Contract Time.

1.3 GENERAL

A. The scheduling and execution of the Work in accordance with the Contract Documents are the responsibility of the Contractor. Schedules shall represent a practical plan to complete the Work within the Contract Time and shall convey the Contractor's intent in the manner of prosecution and progress of the Work. The submittal of schedules shall be understood to be the Contractor's representation that the schedule meets the requirements of the Contract Documents and that the Work will be executed in the sequence and duration indicated in the schedule.

B. Schedules shall be consistent with the time and work requirements of the Contract. Contractor shall execute the Work in the sequence indicated on the current approved schedule.

C. The Contractor shall involve and coordinate with all Subcontractors, third parties, and material suppliers in the development and updating of schedules.

D. Review or acceptance of schedules by SANBAG shall not waive any contract requirements and shall not relieve the Contractor of any obligation or responsibility for submitting complete and accurate information.

E. If after a schedule has been accepted or approved by SANBAG, either the Contractor or SANBAG discovers that any aspect of the schedule has an error or omission, Contractor shall correct it on the next Progress Schedule.

F. Errors or omissions on schedules shall not relieve the Contractor from finishing all work within the Contract Time.

G. The Contractor shall adjust, add to, or clarify any portion of a schedule which SANBAG determines to be insufficient for monitoring the Work or to be impractical for any reason.

H. Use of float suppression techniques such as preferential sequencing or logic, special lead/lag logic restraints and extended activity durations will be cause for rejection of schedule submittal.

1.4 DEFINITIONS

A. Activity: A task, event or other project element on a schedule that contributes to completing the project. Activities have a description, start date, finish date, duration and one or more logic ties.

B. Actual Dates: The actual start or finish date of an activity which occurs prior to the data date. Dates occurring after the data date are forecasted dates and are not actual dates.

C. Bar Chart (Gantt Chart): A graphic display of schedule-related information in which activities or other project elements are listed down the left side of the chart, dates are shown across the top, and activity durations are shown as date-placed horizontal bars.

D. Baseline Schedule: The initial schedule representing the Contractor's work plan on the first working day of the project as approved by SANBAG.

E. Contract Completion Date: Contracted original completion date defined by the duration of the project.

F. Controlling Operation: The activity, within that series of activities defined as the applicable critical path, which if delayed or prolonged will delay the scheduled completion date of the Work.

G. Critical Path: The longest continuous chain of activities for the project that has the least amount of total float of all chains. In general, a delay on the critical path will extend the scheduled completion date.

H. Critical Path Method (CPM): A network based planning technique using activity durations and the relationships between activities to mathematically calculate a schedule for the entire project.

I. Data Date: The day after the date through which a schedule is current. Everything occurring earlier than the data date is "as-built" and everything on or after the data date is "planned."

J. Early Completion Date: A scheduled completion date which is earlier than the contract completion date.

K. Free Float: The amount of time an activity can be delayed before affecting a subsequent activity.

L. Hammock Activity: An activity added to the network to span an existing group of activities for summarizing purposes.

M. Milestone: A marker in a network which is typically used to mark a point in time or denote the beginning or end of a sequence of activities. A milestone has zero duration, but will otherwise function in the network as if it were an activity.

N. Narrative Report: A document submitted with each schedule that discusses topics related to project progress and scheduling.

O. Near Critical Path: A chain of activities with total float exceeding that of the critical path but having no more than 10 working days of total float.

P. Open Ended Activity: An activity without at least one predecessor and one successor.

Q. Out of Sequence Activities: Any activity which actually starts in a sequence other than shown in the current approved schedule.

R. Progress Schedule: A current schedule developed from the baseline or subsequent schedule through regular monthly review to incorporate as-built progress and any planned changes.

S. Revision: A change in the schedule that modifies logic, adds or deletes activities, or alters activities, sequences, or durations.

T. Scheduled Completion Date: The planned date of completion of the Work shown on the current approved schedule.

U. Time Impact Analysis: A schedule and narrative report developed specifically to demonstrate what effect a proposed change or delay has on the current scheduled completion date.

V. Total Float: The amount of time that an activity or chain of activities can be delayed before extending the scheduled completion date.

1.5 SUBMITTALS

A. Baseline Schedule: Submit Baseline Schedule to SANBAG within 21 calendar days following the date of the Limited Notice to Proceed.

B. Progress Schedule: Progress Schedule is due the first working day of each month and as part of progress payment application submittal.

C. Final Progress Schedule: Submit within 14 calendar days following Final Completion.

D. Subcontractor Documentation:
   1. Submit with the Baseline Schedule all Subcontractor schedules utilized in the development of the Baseline Schedule.
   2. Submit with the Baseline Schedule, a statement on Subcontractor's letterhead, certifying that Subcontractor has reviewed and concurs with the Baseline Schedule and that Subcontractor's related schedule has been reasonably incorporated, including activity duration.

E. Scheduler Qualifications: At Pre-Construction Conference, submit for SANBAG's acceptance a resume of the individual proposed to perform scheduling. If the accepted individual leaves the Project or is assigned duties which no longer permit the individual to perform scheduling, notify SANBAG and submit for acceptance the resume of the proposed replacement. Proposed individual must have a minimum of two years of verifiable scheduling experience on similar projects.

F. Submit for SANBAG's use software and corresponding licenses for either 1) Primavera Project Planner for Windows (must be readable by P3, version 3.0 or latest release), 2) Primavera P6 Professional Project Management (latest release), or 3) Microsoft Project, that the Contractor will use to create scheduling plans for this project.

1.6 DELIVERABLES

A. Three Week Look Ahead Schedule: Submit first Three-Week Look Ahead Schedule at Pre-Construction Conference. Submit weekly thereafter at Construction Progress Meetings until Final Completion. Submit at least six (6) hard copies.

1.7 SUBMITTAL DETAILS

A. Each submittal of Baseline and Progress Schedules shall include the elements listed herein.

B. Electronic Data: Compact discs containing schedule, schedule data, and narrative. Submit two (2) sets of compact discs. Schedule data shall be saved in P6 (.xer) format, P3 (.prx), SureTrak (.stx), or Microsoft Project (.mpp) backup format and shall contain all files of the schedule that can be restored by SANBAG for its evaluation and analysis.
   1. Tabular Reports: Electronic data submitted shall be sufficient to enable SANBAG to generate the following tabular reports: Report sorted by activity number, report sorted by early start, and report sorted by total float. Data shall include the following items for each activity: activity number, description of what is to be accomplished and where, codes, duration, milestones, predecessor and successor logic, early start, early finish, late start, late finish, total float and free float.

C. Gantt Activity Bar Charts: Show activities grouped by work areas and sorted by early start. Submit at least six (6) hard copies, 11 by 17 inch, and at least two (2) color E-size plots, 34 inch by 44 inch.

D. Narrative Reports: Submit at least six (6) hard copies.

1.8 BASELINE SCHEDULE

A. Baseline Schedule shall utilize computerized Critical Path Method (CPM) network scheduling.

B. Software: Utilize latest version of Primavera P6 Professional Project Management ("P6") or Microsoft Project.

C. Approval by SANBAG of the Baseline Schedule is a prerequisite for the Notice to Proceed (NTP).

D. Baseline Schedule shall show the order in which the Contractor proposes to carry out the work with logical links between work activities. Ensure that activity sequences are logical and that schedule shows a coordinated plan for complete performance of the work.

E. Baseline Schedule shall include the entire scope of work through the end of Contract Time. Show how the Contractor plans to complete the Work. Show the activities that define the critical path. Show float on other activities. Keep multiple critical paths and near-critical paths to a minimum.

F. The data date for the Baseline Schedule shall be the date of Notice to Proceed (NTP). Baseline Schedule shall not attribute negative float or negative lag to any activity.

G. Baseline Schedule shall define non-working days as the following holidays: New Years Day, Martin Luther King Day, President's Day, Memorial Day, Independence Day, Labor Day, Thanksgiving Day, Day after Thanksgiving Day and Christmas Day.

H. Float: Float shall not be considered as time for the exclusive use of or benefit of either SANBAG or the Contractor, but shall be considered as a jointly owned, expiring resource available to the project and shall not be used to the financial detriment of either party. Use of float suppression techniques such as preferential sequencing, special lead/lag logic restraints, extended activity durations or imposed constraints will be cause for rejection of the Baseline Schedule and subsequent Progress Schedules. The Contractor shall not create artificial activities that eliminate any or all float in the project schedule.

I. Calendar: Utilize multiple schedule calendars to identify and differentiate between day and night shift work and any weekend activity work.

J. Autocost rules: Autocost rules shall link the remaining duration and the schedule percent complete. Other automatic cost/resource calculation rules shall be in a format acceptable to SANBAG.

K. Retained Logic: When schedule calculations are performed, the "Retained Logic" setting shall be used.

L. Early Completion: The Contractor may submit a Baseline or Progress Schedule showing an early scheduled completion date provided that the requirements of the Contract are met.
   1. The difference between the early completion date and the contract completion date is considered float. Float time shall not be for the exclusive benefit of either SANBAG or the Contractor. Float shall be a resource available to both parties.
   2. SANBAG is not required to accept or approve a schedule with an early completion date.
   3. Contractor shall not be entitled to extra compensation in the event an agreement is reached on an early completion date and Contractor completes the Work, regardless of the reason, beyond the early completion date but within the Contract Time.
   4. Changes to Contract Time or contract completion date shall be by Contract Change Order.

M. Baseline Narrative Report: Submit a narrative report with the Baseline Schedule describing the schedule development process, activity coding structure, basis of proposed durations, work sequence, approach or methods the Contractor intends to employ in the Work, areas of concerns, if any and explanation of early scheduled completion date, if proposed.

1.9 BASELINE SCHEDULE ACTIVITIES

A. Activity Coding: Contractor shall develop its own activity coding structure. Activities shall be coded to a level sufficient to allow for multiple sorting.

B. General Activity Requirements: Baseline schedules shall include activities to show the following, as applicable:
   1. Project characteristics, salient features, or interfaces, including those with outside entities that could affect time of completion.
   2. Project start date, scheduled completion date and other milestones.
   3. Work performed by the Contractor, Subcontractors, Suppliers and Third Parties.
   4. Submittal development, delivery, review and approval, including those from the Contractor, Subcontractors, third parties, and suppliers which impact the critical path.
   5. Procurement, delivery, installation, and testing of materials, plants, and equipment.
   6. Required delivery of SANBAG furnished materials and periods of use of SANBAG-furnished equipment.
   7. Acquisition of permits.
   8. Utility notification and relocation noted to be performed by others.
   9. Erection and removal of falsework and shoring.
   10. Major traffic routing switches.
   11. Final cleanup.
   12. Work performed by other Contractors and entities.
   13. Demobilization, punch list and project closeout activities.

C. The number of activities shall be sufficient to assure adequate planning of the project, to permit monitoring and evaluation of progress, and to do an analysis of time impacts.

D. Each schedule activity shall include the following:
   1. A clear, legible and unique description, including the location of work.
   2. Start and finish dates.
   3. Duration not less than one full day, except for milestone activities, and not more than 10 working days, with the exception of submittals, fabrication, procurement, and summary activities, unless otherwise approved by SANBAG.
   4. At least one predecessor and one successor activity, except for project start and finish milestones.
   5. Contractually required constraints. Use of any other types of constraints is not allowed without prior approval by SANBAG.
   6. Activity codes for responsibility, phase, area, stage, work shifts, and contract bid item numbers as applicable. Code for responsibility shall denote the entity performing the activity, i.e. SANBAG, Contractor, Subcontractor, or utility.

1.10 PROGRESS SCHEDULE

A. Progress Schedule shall consist of an updated schedule based on the Baseline Schedule.

B. Release of Progress payments will be dependent on receipt of an acceptable Progress Schedule.

C. Include the following information in the Progress Schedule: Status of work actually completed to date and the work yet to be performed as planned; actual activity start dates, and finish dates, as applicable; and durations for work that has been completed as the work actually occurred, including SANBAG submittal review and Contractor resubmittal times. Show approved time adjustments and project completion dates. Show approved Contract Change Order work. Show weather delay days which have already occurred and have been acknowledged by SANBAG in writing.

D. Modifications shown in Progress Schedule: The Contractor may include modifications such as adding or deleting activities or changing activity constraints, durations or logic that do not (1) alter the critical path(s) or near critical path(s) or (2) extend the scheduled completion date compared to that shown on the current accepted schedule. The Contractor shall state in writing the reasons for any changes to planned work. If any proposed changes in planned work will result in (1) or (2) above, then the Contractor shall submit a time impact analysis as described herein.

E. Change logic relationships of out-of-sequence activities to reflect actual work sequence.

F. Progress Narrative Report: Submit Narrative Report containing detailed comprehensive descriptions of the following information with every Progress Schedule submittal:
   1. Description of work completed during the reporting period, including progress made on activities on the current critical path.
   2. Explanation for not working on critical path activities during the reporting period.
   3. Description of the current critical path(s).
   4. Explanation of changes to the critical path(s), including changes to logic or activity durations, and scheduled completion date since the last schedule submittal. Include explanation of work activities performed out of sequence from the approved schedule.
   5. Status of major activities on the current critical path, including percent complete, and amount of time ahead or behind schedule. Provide description and explanation of any delays encountered during the reporting period, including impacts on other activities, milestones, and completion dates.
   6. Description of proposed corrective actions and schedule adjustments to mitigate delays and bring the project back on schedule.
   7. Status of permits, change orders, submittals, potential claims, time adjustments, material and equipment procurement, non-conformance reports, and any other pending items on the current critical path.
   8. Description of activities on the critical path to be performed in the next update period.
   9. Any other information pertinent to the status of the project as determined by the Contractor or requested by SANBAG.

G. Final Progress Schedule: Prepare and submit an updated, as-built Progress Schedule with actual start and finish dates for all activities and documented changes from the Preliminary Progress Schedule. Include a narrative report.
   1. The Contractor shall provide a written certificate with this submittal signed by the Contractor's project representative and an officer of the company stating, "To my knowledge and belief, the enclosed final update schedule reflects the actual start and finish dates of the actual activities for the project contained herein. An officer of the company may delegate in writing SANBAG to sign the certificate to a responsible manager.

1.11 THREE-WEEK LOOK AHEAD SCHEDULE

A. Three-Week Look Ahead Schedule shall contain one week of historical information and three weeks of planned activities in support of and consistent with the Baseline Schedule or current Progress Schedule.

B. Format: An electronic spreadsheet or other format acceptable to SANBAG. Label each activity to match the Activity ID number on the current Progress Schedule. Highlight the critical path. Data date shall be within current week.

C. Level of Detail: Greater than in the Baseline Schedule or Progress Schedule, if necessary to fully describe the ongoing and/or upcoming work.

D. Clearly show each activity requiring track access during specified work windows; schedule activities performed during single or multiple track outage work windows utilizing an hourly time scale.

E. Show weather delay days which have already occurred and have been acknowledged by SANBAG in writing.

F. When appropriate, show demobilization and punch list activities through to Final Completion.

1.12 REVIEW AND RESUBMITTALS

A. SANBAG will review and return the Contractor's schedule submittals and deliverables with a written response according to the following schedule from the date of receipt from the Contractor.
   1. Baseline Schedule: Within 15 working days.
   2. Progress Schedule: Within 10 working days.

B. SANBAG will review and return resubmittals to the Contractor with a written response according to the following schedule from the date of receipt from the Contractor.
   1. Baseline Schedule: Within 7 working days.
   2. Progress Schedule: Within 5 working days.

C. If the Contractor does not agree with SANBAG's comments, provide written notice of disagreement within 5 working days from the receipt of SANBAG's comments. Resolve any SANBAG comments with which the Contractor disagrees in a meeting held for that purpose.

D. The first of each type of submittal and deliverable submitted by the Contractor will be reviewed for format, as well as content. SANBAG may require format changes. Once the format has been approved, submit subsequent submittals and deliverables in the approved format.

E. Baseline Schedule Review Meeting: Within 10 working days after the submittal of the Baseline Schedule, SANBAG will conduct a Baseline Schedule Review Meeting with the Contractor.
   1. Contractor shall have its Project Manager, construction management personnel, individual performing scheduling and major Subcontractor representatives, in attendance.
   2. Meeting topics will include the following:
      a. Contractor's presentation of Baseline Schedule submittal including explanation of critical path, critical path activities, resources and production rates of work activities, and other items related to scheduling of work.
      b. General review and discussion of schedule format, activities and information potentially missing from the schedule.

F. Recovery Schedule: If Contractor's actual progress of the Work falls ten (10) working days behind the approved Baseline Schedule for the Contract completion date, the Contractor shall prepare and submit a Recovery Schedule within five (5) working days to explain and display how the Contractor intends to regain compliance with the Contract completion date. The Recovery Schedule shall detail the Contractor's plan for bringing the work back on schedule. The Contractor's plan for recovery shall conform to all other Contract requirements. Incorporate revisions accepted by SANBAG in the next Progress Schedule. Do not incorporate proposed revisions in the Progress Schedule prior to SANBAG's acceptance.

1.13 TIME IMPACT ANALYSIS

A. If the Contractor requests an extension of time for the completion of an interim milestone date or Contract completion date, justification in the form of a Time Impact Analysis (TIA) for such extension shall be furnished. SANBAG will determine whether or not the Contractor is entitled to an extension of time under the provisions of the Contract. Submission of a TIA based on revised activity logic and durations is required for approval of any time extension. The cost of preparing time impact analyses or subsequent schedule revisions shall be borne solely by the Contractor.

B. Illustrate the impacts of each change or delay on the current Contract completion date or interim milestone, as appropriate. Use the approved Progress Schedule which has a data date closest to and prior to the event for which an extension is being requested.

C. Include a schedule showing all schedule logic revisions, duration changes, and additions or deletions of activities for the work in question and its relationship to other activities on the Progress Schedule. Provide additional supporting evidence if requested by SANBAG.

D. SANBAG's determination as to the total number of days of time extension will be based upon the current schedule for the time period in question, and all other relevant information. Actual delays in activities which, according to the Progress Schedule, do not affect the critical path or the Contract completion date will not be the basis for a time extension.

E. SANBAG will review the facts and advise the Contractor in writing of SANBAG's decision. If SANBAG determines that the Contractor is entitled to an extension of time to an interim milestone, the Contract completion date will remain the same, unless SANBAG specifies another date. Any change to Contract milestones or to the Contract completion date will be made by Change Order.

F. If SANBAG has not yet made a full determination as to the amount of time extension to be granted and the parties are unable to agree as to the amount of extension to be reflected in the Progress Schedule, reflect that amount of time extension in the Progress Schedule as determined to be appropriate by SANBAG for such interim purpose. It is understood and agreed that such interim determination by the for the purposes of this article will not be binding upon either party for any other purpose, and that, after SANBAG has made a final determination as to any time extension, revise the Progress Schedule in accordance with the final decision.

1.14 INCLEMENT WEATHER CONDITION

A. Contractor shall allow for inclement weather in the Baseline Schedule by incorporating an activity titled "Rain Day Impact Allowance" as the last activity prior to the Substantial Completion Milestone. No other activities may be concurrent with it. The duration of Rain Delay Impact Allowance activity will be based on Section 01 31 99 - Period of Performance.

PART 2 - PRODUCTS (NOT USED)

PART 3 - EXECUTION (NOT USED)

PART 4 - MEASUREMENT AND PAYMENT

A. Work of this Section is considered incidental to Work under other payment items and no separate measurement or payment will be made to the Contractor for Work of this Section.

END OF SECTION

SECTION 01 33 00
SUBMITTAL PROCEDURES

PART 1 - GENERAL

1.1 SUMMARY

A. This Section includes requirements for the submittal schedule and procedural requirements for submitting Shop Drawings, Product Data, Samples, administrative and miscellaneous (non-administrative) work-related submittals.

1.2 RELATED REQUIREMENTS

A. Section 01 25 00, Substitution Procedures.

B. Section 01 60 00, Product Requirements.

C. Section 01 77 19, Project Closeout

D. Section 01 78 39, Project Record Documents.

E. Section 01 79 00, Demonstration and Training

1.3 DEFINITIONS

A. Action Submittals: Written and graphic information and physical samples that require responsive action from appropriate reviewers. Action submittals are those submittals indicated in individual Specification Sections as action submittals.

B. Informational Submittals: Written and graphic information and physical samples that do not require a response. Submittals may be rejected for not complying with requirements. Informational submittals are those submittals so described in individual Specification Sections.

C. Work Plans: Include narrative descriptions, diagrams, equipment, procedures for excavation, demolition, site clearing, maintenance of traffic, etc

D. Certificates: Include certified Material test reports, certification of proper disposal of demolition Materials, or tickets demonstrating compliance with Materials, tests or Specifications indicated.

E. Equipment: Include equipment Specifications, manufacturer information and demonstration of suitability of equipment for intended use.

F. Product Data: Include standard printed information on Materials, products and systems to be furnished by the Contractor for this Contract.

G. Shop Drawings: Include detailed manufacturing and layout information, demonstrating the Contractor's approach to meeting the intent of the Plans and Specifications.

H. Samples: Include physical examples of Materials either for limited visual inspection or (where indicated) for confirmation, testing, and analysis by SANBAG.

I. Miscellaneous Submittals: Such submittals shall be related directly to the Work, but not necessarily administrative related. Include Work schedule, phasing plans, warranties, guarantees, maintenance agreements, workmanship bonds, survey data and reports, physical work records, quality testing and certifying reports, copies of industry standards, Record Plans, field measurement data, operating and maintenance Materials, overrun stock (and similar information) and, devices and Materials applicable to the Work but not processed as Shop Drawings, Product Data or samples.

1.4 PATENTS

A. In the event that any patented article, material, or process is to be installed or used in the performance of the Work as shown on the plans or particular specifications thereof, the Contractor shall pay the royalty chargeable and shall save, keep, and bear SANBAG and SANBAG's Representatives harmless from (a) all damage, costs, and expenses by reason of any infringement of the patent or any failure to pay the royalty chargeable for use thereof, or (b) any loss to SANBAG in the event that SANBAG is enjoined from using such patented article or material, or (c) the incidental damage caused by the loss of use and damage to SANBAG property in removing same, and (d) the cost of replacing the article or material the use of which is enjoined. It is further provided that the Bond for faithful performance shall be deemed to expressly apply to this provision of the specifications.

1.5 CONTRACTOR-PREPARED PLANS, PRODUCT DATA, AND SAMPLES

A. The Contract Documents shall be supplemented by Shop Drawings, working plans, equipment layout plans, coordination plans, lift plans, product data, samples, and similar submittals prepared by the Contractor or its Subcontractors or Suppliers, of any tier. These materials and similar submittals shall be furnished as required for coordination of the Contractor's work, as required for the coordination of the work with forces of SANBAG or other Contractors working for SANBAG, as required by the various Sections of the Specifications, or as requested by SANBAG. The purpose of the submittal is to demonstrate for those portions of Work for which submittals are required the manner in which the Contractor proposes to conform to the information given and the design concept expressed in the Contract Documents.

B. When Shop Drawings, Working Plans, Equipment Layout Plans, Coordination Plans, Lift Plans, product data, samples or similar submittals are required by any Section of the Specifications or have been requested by SANBAG, the Contractor shall coordinate all Work under the various sections of the Specifications to ensure that no interferences occur in the areas, structures, or rooms for which such plans have been required, and that necessary clearances are provided.

1.6 SUBMITTAL SCHEDULE

A. Submit a schedule of submittals, arranged in chronological order by dates required by the construction schedule. When establishing dates, include the time required for review, ordering, manufacturing, fabrication, and delivery. Include additional time required for making submittal corrections or modifications noted by SANBAG or SANBAG's Representatives, and additional time for handling and reviewing submittals required by those corrections.
   1. Coordinate the submittal schedule with the list of subcontracts, the Schedule of Values, and the Contractor's construction schedule.
   2. Submit Initial Submittal Schedule 15 days after issuance of Limited Notice to Proceed. Include submittals required during the first 60 days of construction. List those submittals required to maintain orderly progress of the Work, and those required early because of long lead time for manufacture or fabrication. Indicate if a submittal is on the critical path for project completion.
   3. Final Submittal: Submit concurrently with the first complete submittal of the Contractor's construction schedule. Submit a revised submittal schedule to reflect changes in the current status and timing for submittals.
   4. Format: Arrange the following information in a tabular format:
      a. Scheduled date for first submittal.
      b. Specification Section number and title.
      c. Submittal category (action or informational).
      d. Name of Subcontractor.
      e. Description of the Work covered.
      f. Scheduled date for reviewer's response.
      g. Scheduled dates for purchasing.

h. Scheduled dates for delivery and installation.
i. Activity or event number.
j. Float.

1.7 PROCESSING REQUIREMENTS FOR SUBMITTALS

A. Coordination: Coordinate preparation and processing of submittals with the performance of construction activities. Transmit each submittal sufficiently in advance of related construction activities to avoid delay.
   1. Coordinate each submittal with fabrication, purchasing, testing, delivery, other submittals, and related activities that require sequential activity.
   2. Submit all submittal items required for each Specification Section concurrently unless partial submittals for portions of the Work are indicated on an approved submittal schedule.
   3. Submit action submittals and informational submittals required by the same Specification Section as separate packages under separate transmittals.
   4. Coordinate the transmittal of different types of submittals for related parts of the Work so processing will not be delayed because of the need to review submittals concurrently for coordination.
   5. The Contractor shall show his executed internal review and approval marking. Submittals, which are received from sources other than through the Contractor's office or which have not undergone Contractor review, will be returned marked "without action."
   6. SANBAG reserves the right to withhold action on a submittal requiring coordination with other submittals until related submittals are received.

B. Processing Time: Allow time for submittal review, including time for resubmittals, as follows. Time for review shall commence on the first full working day after SANBAG receives the submittal. No extension of the Contract Time will be authorized because of failure to transmit submittals enough in advance of the Work to permit processing, including resubmittals.
   1. Initial Review: Allow 14 working days for initial review of each submittal. In the event that Submittal is reviewed by a third-party (including Railroad Operators and authorities having jurisdiction), allow up to an additional 14 working days time for SANBAG's response. SANBAG's response to Submittal may include a request for additional information in which case SANBAG's time for response will date from time of receipt of additional information.
   2. Concurrent Consultant Review: Where concurrent review of submittals is required, allow 21 working days for initial review of each submittal.

C. Transmittal: Assemble each submittal individually and appropriately for transmittal and handling. Transmit each submittal using a transmittal form. SANBAG will return, without review, any submittals received from sources other than the Contractor.
   1. Transmittal Form: Provide locations on the form for the following information:
      a. Project name.
      b. Date.
      c. Destination (To:).
      d. Source (From:).
      e. Names of Subcontractor, manufacturer, and supplier.
      f. Category and type of submittal.
      g. Submittal purpose and description.
      h. Specification Section number and title.
      i. Indication of full or partial submittal.
      j. Plan number and detail references, as appropriate.
      k. Transmittal number, numbered consecutively.
      l. Submittal and transmittal distribution record.
      m. Remarks.
      n. Signature of transmitter.

D. Identify applicable standards, ASTM, ACI, OSHA, etc. and identify options requiring selection by reviewer.

E. Deviations: Identify deviations from the Contract Documents on submittals.

F. Resubmittals: Make resubmittals in the same form and with the same number of copies as the initial submittal.
   1. Note the date and content of the previous submittal.
   2. Note the date and content of the revision in the label or title block, and clearly indicate the extent of revision.
   3. Resubmit submittals until they are stamped with action by reviewer.

G. Distribution: Furnish copies of final submittals to manufacturers, Subcontractors, suppliers, fabricators, installers, authorities having jurisdiction, and others as necessary for performance of construction activities. Show distribution on the transmittal forms.

H. Use for Construction: Retain full copies of approved submittals on the Work Site. Use only final submittals that are marked with approval notation from the reviewer's action stamp.

1.8 CONFORMANCE OF SUBMITTALS

A. The Contractor is responsible for conformance of all submittals prepared by the Contractor or its Subcontractors or suppliers, of any tier, with all requirements of the Contract Documents. Where required by California law, or as specified in the Contract Documents, submittals shall be signed and sealed by a Professional Engineer licensed in the State of California, or Land Surveyor licensed in the State of California as applicable.

B. The Contractor shall show his executed internal review and approval marking. Submittals, which are received from sources other than through the Contractor's office or which have not undergone Contractor review, will be returned marked "without action."

C. Acceptance of Shop Drawings, Working Plans, Equipment Layout Plans, Coordination Plans, Lift Plans, product data, samples, and similar submittals shall not relieve the Contractor from responsibility for deviations from the Contract Documents, nor from responsibility for errors or omissions of any sort with such plans and data. Neither shall the acceptance of such plans and data by SANBAG or SANBAG's Representative relieve the Contractor from responsibility for the correct installation, or for the proper operation in service, of items requiring submittal of such plans and data.

PART 2 - PRODUCTS

2.1 SUBMITTAL PERFORMANCE REQUIREMENTS

A. Any Work performed without an approved submittal will be done at the Contractor's own risk. The Contractor shall not be relieved of responsibility for deviations from requirements of the Contract Documents by SANBAG's review of Shop Drawings, Product Data, Samples, or similar submittals unless the Contractor has specifically informed SANBAG in writing of such deviation at the time of the submittal and given written acceptance to the specific deviation. The Contractor shall not be relieved of responsibility for errors or omissions in Shop Drawings, Product Data, Samples, or similar submittals by SANBAG's review thereof.

2.2 SUBMITTAL PROCEDURES

A. General Submittal Procedure Requirements: Prepare and submit submittals required by individual Specification Sections. The required types of submittals are indicated in individual Specification Sections.

1. Submit electronic submittals via e-mail as PDF electronic files. SANBAG will return the annotated file. Annotate and retain one copy of file as an electronic Project record document file. Full-size plans must be submitted in hard-copy form.
2. Action Submittals: Submit six paper copies of each submittal, unless otherwise indicated. SANBAG will return one copy.
3. Make copies of the returned copy as required for distribution and for operations and maintenance manuals. Mark up and retain one returned copy as a Project Record Document.
4. Informational Submittals: Submit six paper copies of each submittal, unless otherwise indicated. SANBAG will not return copies.
5. Closeout Submittals and Maintenance Material Submittals: Comply with requirements specified in Section 01 77 19 - Project Closeout.
6. Certificates and Certifications Submittals: Provide a statement that includes the signature of the entity responsible for preparing certification. Certificates and certifications shall be signed by an officer or other individual authorized to sign documents on behalf of that entity who is an Engineer or Architect recognized to practice engineering or architecture in the State of California.
7. Provide a notarized statement on original paper copy certificates and certifications where indicated.
8. Test and Inspection Reports Submittals: Comply with requirements specified in Section 01 40 00 - Quality Requirements.

B. Product Data: Collect information into a single submittal for each element of construction and type of product or equipment. A Material Safety Data Sheet shall be submitted for each product.
1. If information must be specially prepared for submittal because standard published data are not suitable for use, submit as Shop Drawings, not as Product Data.
2. Mark each copy of each submittal to show which products and options are applicable.
3. Include the following information, as applicable:
   a. Manufacturer's catalog cuts.
   b. Manufacturer's product specifications.
   c. Standard color charts.
   d. Statement of compliance with specified referenced standards.
   e. Testing by recognized testing agency.
   f. Application of testing agency labels and seals.
   g. Notation of coordination requirements.
   h. Availability and delivery time information.
   i. Manufacturer's written recommendations.
   j. Manufacturer's installation instructions.
   k. Mill reports.
   l. Standard product operation and maintenance manuals.
   m. Approval number of organizations or agencies as required by agencies having jurisdiction.
   n. Notation of dimensions verified by field measurements.
   o. Notation of coordination requirements.
4. For equipment, include the following in addition to the above, as applicable:
   a. Wiring diagrams showing factory-installed wiring.
   b. Printed performance curves.
   c. Operational range diagrams.
   d. Clearances required to other construction, if not indicated on accompanying Shop Drawings.
5. Submit Product Data before or concurrent with Samples.
6. Submit Product Data in the following format:
   a. PDF electronic file: Make copies of the returned copy as required for distribution and for operations and maintenance manuals. Mark up and retain one returned copy as a Project Record Document.

b. Product Data: Submit six paper copies unless otherwise indicated. SANBAG will return one copy. Make copies of the returned copy as required for distribution and for operations and maintenance manuals. Mark up and retain one returned copy as a Project Record Document.

C. Shop Drawings, Working Plans, Equipment Layout Plans, and Coordination Plans: Prepare Project-specific information, drawn accurately to scale. Do not base Plans on reproductions of the Contract Documents or standard printed data, unless submittal based on the Engineer's digital data plan files is otherwise permitted. Unless otherwise approved by SANBAG or indicated in specific Sections of the Specifications, Shop Drawings shall be scaled sufficiently large to accurately show all pertinent aspects of the item and its relationship to the Work. The Contractor shall additionally submit the Shop Drawing in PDF electronic format

1. Preparation: Fully illustrate requirements in the Contract Documents. Include the following information, as applicable:
   a. Identification of products.
   b. Product Schedules.
   c. Compliance with specified standards.
   d. Notation of coordination requirements.
   e. Notation of dimensions established by field measurement.
   f. Relationship and attachment to adjoining construction clearly indicated.
   g. Seal and signature of California registered professional engineer if specified.
   h. Dimensions and clearances.
   i. Fabrication and installation Drawings.
   j. Roughing-in and setting diagrams.
   k. Wiring diagrams showing field-installed wiring, including power, signal, and control wiring. Differentiate between manufacturer-installed and field-installed wiring.
   l. Templates and patterns.
   m. Design calculations.
   n. Approval number of organizations or agencies with jurisdiction for the Work..
2. Sheet Size: Except for templates, patterns, and similar full-size plans, submit Shop Drawings on sheets at least 8-1/2 x 11 inches but no larger than 24 by 36 inches.
3. Submit Shop Drawings in the following format:
   a. PDF electronic file: Make copies of the returned copy as required for distribution and for operations and maintenance manuals. Mark up and retain one returned copy as a Project Record Document.
   b. Opaque copies: Submit six of each submittal. Mark up and retain one returned copy as a Project Record Document.

D. Samples: Submit Samples for review of kind, color, pattern, and texture for a check of these characteristics with other elements, and for a comparison of these characteristics between the submittal and the actual component as delivered and installed.

1. Transmit Samples that contain multiple, related components (such as accessories) together in one submittal package.
2. Identification: Attach a label on the unexposed side of Samples that includes the following:
   a. Generic description of Sample.
   b. Product name and name of manufacturer.
   c. Sample source.
   d. Number and title of applicable Specification Section.
3. Disposition: Maintain sets of approved Samples at the Work Site, available for quality-control comparisons throughout the course of construction activity. Sample sets may be used to determine final acceptance of construction associated with each set.
   a. Samples that may be incorporated into the Work are indicated in individual Specification Sections. Such Samples must be in an undamaged condition at time of use.

b. Samples not incorporated into the Work, or otherwise designated as SANBAG's property, are the property of the Contractor.

4. Samples Detailed Work Plans shall be submitted by the Contractor for temporary structures and for such other temporary Work as may be required for construction, but which does not become an integral part of the completed Project. Submittals shall include back-up calculations or any information needed to explain the structure or system or its intended use.
5. Where a submittal involves engineering computations or original design Work is depicted, the submittal shall show the name, the State of California registration number, seal, and signature of the Professional Engineer certifying that such computations or design Work are correct and in conformance with standards, codes, and acceptable engineering practice.
6. Number of Initial Selection Samples: Submit four full sets of available choices where color, pattern, texture, or similar characteristics are required to be selected from a manufacturer's product line.
7. Samples for Verification: Submit full-size units or Samples of the size indicated, prepared from the same material to be used for the Work, cured and finished in the manner specified, physically identical with the material or product proposed for use, and showing the full range of color and texture variations expected. Samples include, but are not limited to, the following: partial sections of manufactured or fabricated components; small cuts or containers of materials; complete units of repetitively used materials; swatches showing color, texture, and pattern; color range sets; and components used for independent testing and inspection.
8. Number of Verification Samples: Submit four sets of Samples. Mark up and retain one returned Sample set as a Project record sample.
   a. Submit a single Sample where assembly details, workmanship, fabrication techniques, connections, operation, and other similar characteristics are to be demonstrated.
   b. If variations in color, pattern, texture, or other characteristics are inherent in the material or product represented by a Sample, submit at least four sets of paired units that show the approximate limits of the variations.
9. The Contractor shall submit 1 reproducible set and 5 copies of each Shop Drawing submittal. Distribution of submitted Shop and Working Plans by the Contractor for SANBAG's use will be performed by SANBAG. The Contractor shall make and distribute all copies required for his purposes.

E. Product Schedule: As required in individual Specification Sections, prepare a written summary indicating the types of products required for the Work and their intended location. Include the following information in tabular form:
   1. Type of product: Include a unique identifier for each product.
   2. Manufacturer and product name, and model number if applicable.
   3. Number and name of room or space.
   4. Location within room or space.
   5. Submit the product schedule in the following format:
      a. PDF electronic file: Mark up and retain one returned copy as a Project Record Document.
      b. Paper copies: Submit four paper copies of the product schedule or list, unless otherwise indicated. Mark up and retain one returned copy as a Project Record Document.

F. Certificates of Compliance: Certificates of Compliance shall be submitted by the Contractor to SANBAG for those Materials and products for which no samples and test results are specified. The certificates shall:
   1. State that the product complies with the respective Contract Specification and Contract Plan requirements.

2. Be accompanied by a certified copy of test results pertaining to the product. All test equipment used shall be verified to be in calibration at the time of each test and test reports shall so indicate. No test shall be made without such verification. When required by the Contract Documents or by law, certified test results shall be sealed by a Professional Engineer licensed to practice in the State of California.
3. Show product represented and its location in the Contract, producer's name, product trade name and catalog number as applicable, place of product origin, test date, testing organization's name and address, quantity of the product to be furnished, and the related Contract Plan Sheet(s) and Specification section numbers.

G. Where required by the Specification or if requested by SANBAG, submit the following written statements on the manufacturer's letterhead:
1. Certification that the manufacturer, its products or materials complies with requirements in the Contract Documents. Include evidence of manufacturing experience where required.
2. Material Test Reports: Submit reports written by a qualified testing agency, on testing agency's standard form, indicating and interpreting test results verifying the material's compliance with requirements in the Contract Documents.
3. Product Test Reports: Submit written reports indicating the current product produced by the manufacturer complies with requirements in the Contract Documents. Base reports on an evaluation of tests performed by the manufacturer and witnessed by a qualified testing agency, or on comprehensive tests performed by a qualified testing agency.
4. Research Reports: Submit written evidence, from a model code organization acceptable to jurisdictional authorities that the product complies with the building code in effect for the Project. Include the following information:
   a. Name of evaluation organization.
   b. Date of evaluation.
   c. Time period when report is in effect.
   d. Product and manufacturers' names.
   e. Description of product.
   f. Test procedures and results.
   g. Limitations of use.
5. Preconstruction Test Reports: Submit reports written by a qualified testing agency, on testing agency's standard form, indicating and interpreting results of tests performed before installation of the product to determine compliance with performance requirements in the Contract Documents.
6. Compatibility Test Reports: Submit reports written by a qualified testing agency, on testing agency's standard form, indicating and interpreting results of compatibility tests performed before installation of product. Include written recommendations for primers and substrate preparation needed for adhesion.
7. Field Test Reports: Submit reports indicating and interpreting results of field tests performed either during installation of the product or after the product is installed in its final location to verify compliance with requirements in the Contract Documents.
8. Design Data: Prepare and submit written and graphic information, including, but not limited to, performance and design criteria, a list of applicable codes and regulations, and calculations. Include a list of assumptions and other performance and design criteria, and a summary of loads. Include load diagrams if applicable. Provide name and version of software, if any, used for calculations. Include page numbers.
9. Manufacturer's Instructions: Prepare written or published information that documents the manufacturer's recommendations, guidelines, and procedures for installing or operating a product or equipment. Include the name of the product and the name, address, and telephone number of the manufacturer. Include the following, as applicable:
   a. Preparation of substrates.
   b. Required substrate tolerances.
   c. Sequence of installation.
   d. Required installation tolerances.

e. Required adjustments.
f. Recommendations for cleaning and protection.

10. Manufacturer's Field Reports: Prepare written information documenting the factory-authorized service representative's tests and inspections. Include the following, as applicable:
    a. Name, address, and telephone number of the factory-authorized service representative making the report.
    b. Statement on condition of substrates and their acceptability for installation of product.
    c. Statement that products at Work Site comply with requirements.
    d. Summary of installation procedures being followed, whether they comply with requirements and, if not, what corrective action was taken.
    e. Results of operational and other tests and a statement of whether observed performance complies with requirements.
    f. Statement whether conditions, products, and installation will affect warranty.
    g. Other required items indicated in individual Specification Sections.

PART 3 - EXECUTION

3.1 CONTRACTOR'S REVIEW

A. Review each submittal and check for coordination with other Work of the Contract and for compliance with the Contract Documents. Note corrections and field dimensions. Mark with an approval stamp before submitting to SANBAG.

B. Project Closeout and Maintenance/Material Submittals: Refer to requirements in Section 01 77 19 - Project Closeout and Section 01 78 23 Operation and Maintenance Data.

3.2 SANBAG'S ACTION

A. SANBAG will not review submittals that do not bear the Contractor's approval stamp, and will return such submittals without action.
    1. The review is not conducted for the purpose of determining the accuracy and completeness of other details, such as dimensions and quantities, or for substantiating instructions for installation or performance of equipment or systems, all of which remain the responsibility of the Contractor.
    2. Compliance with specified characteristics is the Contractor's responsibility; it is not considered part of SANBAG's review and indication of action taken.
    3. Acceptance of submittals with deviations shall not relieve the Contractor from responsibility for additional costs of changes required to accommodate such deviations. Deviations included in submittals without prior acceptance are excepted from review of submittals, whether noted or not on returned copy.
    4. Review of a separate item shall not indicate acceptance of the assembly of which the item is a part.
    5. Make only those revisions required or accepted by SANBAG.
    6. Notations by SANBAG which increase Contract Cost or Contract Time shall be brought to SANBAG's attention, in writing as a Request for Change, before proceeding with Work.
    7. When professional certification of performance criteria of materials, systems, or equipment is required by the Contract Documents, SANBAG shall be entitled to rely on the accuracy and completeness of such calculations and certifications.

B. Action Submittals: SANBAG will review each submittal, make marks to indicate corrections or modifications required, and return it. SANBAG will stamp each submittal with an action stamp and mark the stamp appropriately to indicate the action required.

C. Informational Submittals: SANBAG will review each submittal and will generally not return it (it will be returned it if it does not comply with requirements). SANBAG will forward each submittal to the appropriate party.

D. Partial submittals prepared for a portion of the Work will be reviewed when use of partial submittals has received prior approval from SANBAG.

E. Incomplete submittals are not acceptable; they will be considered nonresponsive, and will be returned without review.

F. Submittals not required by the Contract Documents may not be reviewed and may be discarded.

3.3 SUBMITTAL STATUS

A. Submittals reviewed by SANBAG and returned to the Contractor will be marked with one of the following designations:
   1. No Exceptions Taken
   2. Approved as Noted.
   3. Revise and Resubmit.
   4. Rejected
   5. No Action Taken.

B. The Contractor shall not proceed with procurement, manufacture or fabrication of items submitted for review, until such submittals have been designated by SANBAG as "No Exceptions Taken" or “Approved as Noted." Until submittal items receive such designation by SANBAG, any costs associated with procurement for these items shall be at the Contractor’s risk.

3.4 SUBMITTALS DESIGNATED AS "NO EXCEPTIONS TAKEN" OR "APPROVED AS NOTED"

A. Each copy of the submittal so designated by SANBAG will be identified accordingly by being so stamped and dated. One reproducible copy will be returned to the Contractor.

B. The Contractor shall take responsibility for and bear all cost of damages, which may result from the ordering of any material or from proceeding with any part of the Work prior to being marked "No Exceptions Taken" or "Approved as Noted" by SANBAG.

C. Where Plans are stamped "Approved as Noted”, SANBAG shall indicate the corrected detail or information as required.

D. Submittals stamped “No Exeptions Taken” do not relieve the Contractor from the responsibility of performance of Work as intended in the Plans and Specifications.

3.5 SUBMITTALS DESIGNATED AS “REVISE AND RESUBMIT,” OR “REJECTED. RESUBMIT”

A. Each copy of the submittal so designated by SANBAG will be identified accordingly by being so stamped and dated. One reproducible copy will be returned to the Contractor.

B. If corrections to the submittals are required, copies returned to the Contractor will be marked "Rejected, Resubmit”, or "Revise and Resubmit” and the required corrections shall be made on the re-submittal copies.

C. Re-submittals will be processed in the same manner as first submittals. On every re-submittals, the Contractor shall note in writing any revisions other than the corrections requested by SANBAG on previous submittals. Re-submittals shall use the same number as original submittal but will be modified by R and number of re-submittal in the suffix.

D. The Contractor shall notify SANBAG prior to execution of any correction, which constitutes a change of the Contract requirements indicated on the submittals.

3.6 SUBMITTALS DESIGNATED AS "NO ACTION TAKEN"

A. Each copy of the submittal so designated by SANBAG will be identified accordingly by being so stamped and dated. One reproducible copy will be returned to the Contractor.

B. Submittals made by the Contractor that are not required by the Contract Documents or were not otherwise requested shall be designated "No Action Taken."

PART 4 - MEASUREMENT AND PAYMENT

A. Work of this Section is considered incidental to Work under other payment items and no separate measurement or payment will be made to the Contractor for Work of this Section.

END OF SECTION

This page intentionally left blank.

SECTION 01 35 23
SITE SAFETY REQUIREMENTS

PART 1 - GENERAL

1.1 SUMMARY

A. Work specified in this Section consists of initiating, maintaining, and supervising all safety precautions and programs and assuring a safe Work Site and safe operations around active tracks. The Contractor shall be solely responsible for ensuring that all Work performed under the Contract is performed in strict compliance with all applicable Federal, State, local occupational safety regulations and Operators' safety rules and requirements. This includes the proper manner of protecting personnel and public and the tracks, signals, fiber optic cables, pipe lines, other property, and tenants or licensees upon, adjacent to, across (under or over), and along SANBAG and Operators' property during the construction or maintenance activities on or adjacent to SANBAG and Operators' property. This Work includes furnishing, operating, maintaining, and utilizing safety equipment and providing protective equipment, safeguards, and safety devices on construction equipment.

1.2 RELATED REQUIREMENTS

A. Section 01 14 00 - Work Restrictions.

B. Section 01 35 44 - Environmental Safety and Health Program.

1.3 REFERENCE STANDARDS & REQUIREMENTS

A. Comply with the provisions of all local, State, and Federal regulations; with all applicable Specifications, standards, and recommended practices; and with SANBAG and Railroad Operators' policies, procedures and requirements. Where the State and Federal regulations have differing requirements, the Contractor shall comply with that which is more stringent. These requirements include but are not limited to:
   1. CalOSHA: California State Occupational Safety and Health Administration.
   2. California Code of Regulations (CCR) Title 8, and CFR Title 29.

1.4 SUBMITTALS

A. The Contractor shall submit to SANBAG for review and approval the submittals listed below. The Contractor shall obtain SANBAG approval of the following submittals prior to the start of construction, or as specified in a Limited Notice to Proceed:
   1. Qualifications and certifications of designated lead and other safety representatives, and other first aid providers. This includes the qualifications and certifications of individuals who will serve as qualified or competent persons as defined in CCR Title 8. These supervisory individuals are designated by the Contractor to supervise special high risk/high hazard safety programs such as fall protection, excavation, hazardous substances operations and confined space entry.
   2. Work Plans for all excavation for which a protective system is required by CCR Title 8 Article 6 shall include plans for any ground support system to be used during the excavation and the slopes and configurations of sloping or benching systems. Any engineered shoring shall be designed by a Professional Engineer, Structural or Civil, licensed in the State of California.
   3. Material Safety Data Sheets and other records as required by law.

4. Immediate notification to SANBAG is required for injury to any individual; the Contractor shall submit a written report to SANBAG within 24 hours of said injury.
5. All cranes and on-track equipment operated on the Work Site by the Contractor and or sub-Contractors of any tier require annual and four-year certifications. Any crane subjected to upset, overloading, side pulling, shock loading or support failure, shall be re-certified to allow further use.

1.5 SAFETY AND HEALTH PERSONNEL

A. Provide a Safety Representative, as described in Section 01 43 23 - Contractor Qualifications and Requirements, who shall coordinate and supervise on-site safety and health, and whose qualifications have been submitted to and approved by SANBAG. The Safety Representative shall be authorized by the Contractor to direct the immediate correction of any unsafe or unhealthful condition and, as necessary, to stop Work until appropriate corrective measures have been completed. The Safety Representative must be aware of all project-specific safety practices, processes, rules and procedures, and also shall attend required meetings and maintain regular contact with corresponding safety personnel of SANBAG and the Railroad Operators. The Contractor's Safety Representative shall have no other duties besides those relating to on-site safety and health.

1.6 CONSTRUCTION AND SAFETY EQUIPMENT

A. The Contractor shall provide and maintain lighting, protective devices, barricades, Type K railing, changeable message signs (CMS), and warning signs, all as necessary to ensure the safety of personnel and the general public. The Contractor shall be solely responsible for the timely erection, maintenance, repair, replacement, and removal of such safeguards, without necessity of receiving specific instructions from SANBAG or any other authority having jurisdiction.

B. The Contractor shall provide job specific fall protection from hazards such as skylights (at any angle), floor and wall openings, leading edges, and steel erection. Methods of protection may include fixed systems (guardrails, covers, nets, etc.) and personal fall arrest systems.

C. All equipment, tools and or other items used to complete the Work shall be inspected by the Contractor to ensure compliance with applicable regulatory standards. Equipment shall be used in accordance with the respective manufacturer‘s design, directions, and intended use.

1.7 TESTING EQUIPMENT

A. Testing equipment, as applicable to Work Site safety, shall conform to the requirements of the California Code of Regulations, Title 8, Division of Industrial Safety, unless indicated otherwise.

1.8 IDENTIFICATION OF CONTRACTOR/SUBCONTRACTOR PERSONNEL

A. Contractor personnel shall wear hard hats, orange safety vests or orange T-shirts with reflective strips, safety glasses, and safety shoes at all times while on the Project.

PART 2 - PRODUCTS (NOT USED)

PART 3 - EXECUTION

3.1 CONSTRUCTION SUPERVISION AND METHODS

A. The Contractor is solely responsible for all construction means, methods, techniques, and procedures and for coordinating all portions of the Work under the Contract. This shall include the following:
   1. The Contractor shall establish, implement and maintain an effective IIPP in accordance with CCR Title 8 Section 3203. Contractor shall at all times conduct its operations in accordance with the IIPP and in such a manner as to avoid risk of bodily harm to persons or damage to property and shall promptly take all reasonable precautions to safeguard against such risks and shall make regular safety inspections of its operations. Contractor shall be solely responsible for the discovery, determination and correction of any unsafe conditions related to Contractor‘s performance of the Work.
   2. The Contractor shall secure all Work areas by barricade in accordance with local and State requirements as applicable at the end of each day.
   3. Prior to operating cranes on the Work Site, all crane operators shall have successfully completed testing that verifies the crane operator's ability to read and understand the load chart for the equipment to be operated.
   4. All excavation and backfilling operations shall be under the immediate supervision of a competent person, as defined in CCR Title 8, who is fully familiar with the requirements for safe excavation procedures and capable of enforcing strict compliance with the ground support system plan.

PART 4 - MEASUREMENT AND PAYMENT

A. Work of this Section is considered incidental to Work under other payment items and no separate measurement or payment will be made to the Contractor for Work of this Section.

END OF SECTION

SECTION 01 35 44
ENVIRONMENTAL SAFETY AND HEALTH PROGRAM

PART 1 - GENERAL

1.1 SUMMARY

A. Contaminated and Hazardous Materials may be encountered during the Work. The Contractor shall be solely responsible for ensuring that all Work performed complies with all applicable Federal, State, local occupational safety regulations and SANBAG and Railroad Operators' rules and requirements.

1.2 RELATED REQUIREMENTS

A. Section 01 14 00 - Work Restrictions.

B. Section 01 35 23 - Site Safety Requirements.

C. California Code of Regulations (CCR) Titles 4 & 8, and the Code of Federal Regulations (CFR) Title 29.

D. CalOSHA: California State Occupational Safety and Health Administration.

E. OSHA: Federal Occupational Safety and Health Administration.

1.3 PROCEDURE

A. If the Contractor encounters substances during performance of the Work that are reasonably believed to be hazardous as defined by the California Health and Safety Code, the Contractor shall notify SANBAG immediately, submitting written documentation of the incident and notification within 24 hours. Excavation in the immediate area of the suspected hazardous substances shall be suspended until authorization to resume is received. SANBAG reserves the right to use other labor forces for exploratory work to determine the nature and extent of the hazardous substances.

B. SANBAG's role shall be limited to coordination with regulatory agencies to determine sampling and proper disposal of the contaminated soil. The Contractor shall be responsible for loading, unloading, and transporting all soils to a designated site for testing and to a stockpile with proper protection. All import and backfill with suitable material shall be done by the Contractor to restore the site as directed by SANBAG.

C. For asbestos-containing and lead-based materials, all work shall comply with requirements of the California Code of Regulations, Title 8 specifically Section 5192, Hazardous Waste Operations and Emergency Response. An abatement work plan is required before commencing any demolition work.

1.4 SUBMITTALS

A. An effectively written and coherent Site Specific Safety and Health Plan, as defined in CCR Title 8, prior to the start of construction, or as specified in the Limited Notice to Proceed.

B. Certificates of training (minimum initial 24 hour hazardous waste training and eight-hour annual refresher), respiratory protection and fit-testing, and medical clearance, before start-up of excavation and drilling activities if required.

C. Certificate of training (Hazardous Waste Training and eight-hour supervisory training), experience, and credentials of the Site Safety and Health Officer.

D. Monthly status report of contaminated soil management, including excavated quantities of contaminated soil and work performed using Personal Protective Equipment (PPE). This report must include updated quantities of excavated contaminated soils, and the date, time, number of affected workers, and total number of hours the Contractor performed work in Level C Protection.

E. The Work plan for removal of lead-contained material shall include the following:
   1. A state lead-licensed Contractor and persons shall perform demolition, handling, removal, and monitoring of lead-contained materials.
   2. Air monitoring shall be performed before and during each lead-related activity. The Contractor performing demolition work shall not conduct monitoring work, during or after the completion of all lead-related activities.

PART 2 - PRODUCTS

2.1 MATERIALS

A. PPE and monitoring equipment is to conform to requirements set forth by CAL/OSHA, Federal-OSHA, and the Contractor's Environmental Safety and Health Program.

2.2 HEPA FILTERS

A. Provide high-efficiency particulate air (HEPA) filters for persons working on lead-contained materials.

PART 3 - EXECUTION

3.1 PREPARATION

A. Implement an Environmental Safety and Health Plan for removal of lead-containing material, and excavation and handling of Contaminated and California Hazardous Soils certified by a Certified Industrial Hygienist (CIH) licensed by the American Board of Industrial Hygiene.

B. Select a team of individuals to be included in the Environmental Safety and Health Program. These individuals must be hazardous-waste trained, medically qualified, and fit-tested with an appropriate respirator to drill, excavate, and handle Contaminated and California Hazardous Soils. Prior to drilling, excavation, or handling of Contaminated and California Hazardous Soils, submit a list of individuals that are part of this team, including their current certificates (training, medical clearance, and respiratory fit-testing). Include their names and titles/positions. Any additional individuals that may handle Contaminated and California Hazardous Soils shall be included in the Environmental Safety and Health Program, including replacement individuals and any new position that require Contaminated and California Hazardous Soil handling. Any handling of Contaminated and California Hazardous Soils must be performed by qualified individuals enrolled in the Environmental Safety and Health Program.

C. Designate a full-time Site Safety and Health Officer to recognize hazards, and implement and manage the Environmental Safety and Health Program. The Safety and Health Officer can be a Safety Engineer, provided the individual is qualified to conduct air monitoring and identify environmental hazards, and meets all training requirements set forth in 8 CCR 5192 (e), in addition to the qualifications set forth in the Construction Safety and Security Manual. As a minimum, the Safety and Health Officer shall (a) monitor air quality and hazards to personnel and the Work area during removal of lead-containing material and excavation and handling of Contaminated and California Hazardous Soils and Groundwater, and (b) assign PPE and other equipment necessary for the implementation of the Safety and Health Program.

D. Supply a direct reading Organic Volatile Analyzer equipped with a Photo-ionization Detector (PID) and an initial supply of PPE readily available for use by the team. Replenish the PPE to ensure a supply of PPE is always available to prevent any delays.

E. Supply high efficiency particulate air (HEPA) filters for persons working on removal of lead-contained materials.

F. The Contractor is responsible for any delays associated with lack of preparation, PPE, trained and qualified personnel.

3.2 PERFORMANCE

A. Provide, without delay to Work, hazardous waste–trained, medically qualified, and respirator-fitted workers, and PPE and other equipment, as necessary for implementation and maintenance of the Environmental Safety and Health Program.

B. SANBAG at its cost will have sole right and responsibility to perform soil monitoring and sampling for disposal purposes. If the sampled soil is found to be clean, the Contractor shall dispose of it in the same manner and location as used for other clean soil removed from the site. The Contractor shall be responsible for loading, unloading, and transporting all soils to the designated area. The contaminated and clean soils shall be stored in separated piles. The designated area shall be protected with Visquene sheets covering the ground, and fenced off to prevent trespassing. The soils shall be covered with Visquene sheets prior to legally disposing of them from the site. SANBAG will be responsible for analyzing soil, as well as for trucking and disposing of the contaminated soil accordingly. The Contractor shall be responsible for loading contaminated soil into trucks furnished by SANBAG.

C. In the event the Contractor encounters or suspects contamination, promptly implement measures described in the Contractor Site-Specific Safety and Health Plan, and immediately notify SANBAG or its designee. The Contractor must use the team; that is, those individuals enrolled in the Environmental Safety and Health Program. Ventilation shall be modified, if necessary or if directed by SANBAG, to increase airflow and effectively reduce air contaminants prior to and during removal of lead-containing materials, excavation, and handling of Contaminated and California Hazardous Soils. If Excluded Hazardous Waste Operations are required, the Contractor shall adequately protect the safety and health of its employees, and Subcontractors' employees while working in areas not affected.

D. The Contractor shall be responsible for legal removal of lead-containing materials. The Contractor shall employ a state lead-licensed Contractor for performing such work including demolition, handling, removal, and monitoring of lead-contained materials. All work shall be done in full compliance with requirements of the California Code of Regulations, Title 8, Sections 1532.1 and 5198.

E. The wet method for removal of lead-contained materials shall be used to prevent dust. Lead dust shall be properly disposed of. Air monitoring shall be performed before, during, and after each lead-related activity. A third party without conflict of interest with the Contractor shall conduct the air and clearance monitoring. Surface clearance monitoring shall be conducted after completion of the removal of lead materials. The purpose of the air monitoring is to ascertain that the building air quality is maintained during and after the completion of the Project. All air monitoring results shall be submitted to SANBAG's Corporate Safety representative for review within 24 hours of receipt from the laboratory.

F. The Contractor is responsible for the safety and health of its employees and its Subcontractors. The Contractor shall conduct air monitoring to ensure compliance with monitoring requirements under the Environmental Safety and Health Program, the Site-Specific Safety and Health Plan, CAL/OSHA, and any other local, state, or federal requirements.

G. Dust control and suppression mitigation measures shall be employed by the Contractor. SANBAG reserves the right to conduct air sampling and monitoring to determine the required minimum level of protection.

PART 4 - MEASUREMENT AND PAYMENT

A. Work of this Section is considered Change Order Work and will be made in accordance with Contract Change Order Procedures.

END OF SECTION

SECTION 01 40 00
QUALITY REQUIREMENTS

PART 1 - GENERAL

1.1 SUMMARY

A. This Section includes administrative and procedural requirements for quality assurance and quality control.

B. Testing and inspection services are required to verify compliance with specified or indicated Work requirements. These services do not relieve the Contractor of responsibility for compliance with the Contract Documents requirements.

C. Specific tests and inspection requirements are not specified in this Section but rather indicated or included elsewhere in the Plans and Specifications.

1.2 RELATED REQUIREMENTS

A. Specific quality assurance and quality control requirements for individual construction activities are specified in the Specifications sections that specify those activities and may also cover production of standard products.

B. Requirements for Contractor to provide quality assurance and quality control services required by SANBAG, and the several authorities having jurisdiction, are not limited by provisions of this Section.

C. Specified tests, inspections and related actions do not limit Contractor's other quality assurance and quality control procedures that facilitate compliance with the Contract Documents requirements.

1.3 DEFINITIONS

A. Quality Assurance Services: Activities, actions, and procedures performed prior to and during execution of the Work to guard against defects and deficiencies and substantiate that proposed construction will comply with the Contract Documents requirements.

B. Quality control Services: Tests, inspections, procedures, and related actions during and after execution of the Work to evaluate that actual products incorporated into the Work and completed construction comply with the Contract Documents requirements. These services do not include contract enforcement activities performed by SANBAG or SANBAG's Representative.

C. Mockups: Full-size physical assemblies constructed on-site are used to verify selections made under Sample submittals; to demonstrate aesthetic effects and the qualities of products and materials and execution; to review details for construction, coordination, testing, or operation; to show interface between dissimilar materials; and to demonstrate compliance with required installation tolerances. Mockups are not Samples. Unless otherwise directed by SANBAG, approved mockups establish the standard by which the Work will be evaluated.

D. Pre-construction Testing: Tests and inspections that are performed specifically for the Project before products and materials are incorporated into the Work in order to verify performance or compliance with specified criteria.

E. Product Testing: Tests and inspections that are performed by a Nationally Recognized Testing Laboratory (NRTL), a National Voluntary Laboratory Accreditation Program (NVLAP), or other testing agency qualified to conduct product testing, which firm and procedures must be acceptable to SANBAG and all other authorities having jurisdiction, to establish product performance and compliance with the specified requirements.

F. Source Quality Control Testing: Tests and inspections that are performed at the source, e.g., plant, mill, factory, or shop.

G. Field Quality Control Testing: Tests and inspections that are performed on-site for installation of the Work and for completed Work.

H. Testing Agency: An entity engaged to perform specific tests, inspections, or both. "Testing laboratory" shall mean the same as testing agency.

I. Installer/Applicator/Erector: The Contractor or another entity engaged by Contractor as an employee, Subcontractor, or Sub-Subcontractor, to perform a particular construction operation, including installation, erection, application, and similar construction operations.
   1. Use of trade-specific terminology in referring to a trade or entity does not require that certain construction activities be performed by accredited or unionized individuals or that requirements specified apply exclusively to specific trade(s).

J. Experienced: When used with an entity of individual, "experienced" means having successfully completed a minimum of 5 previous projects similar in nature, size, and extent to this Project; being familiar with special requirements indicated; and having complied with requirements of authorities having jurisdiction.

1.4 CONFLICTING REQUIREMENTS

A. Referenced Standards: If compliance with two or more standards is specified and the standards establish different or conflicting requirements for minimum quantities or quality levels, comply with the most stringent requirement. Refer conflicting requirements to SANBAG for a determination before proceeding.

B. Minimum Quantity or Quality Levels: The quantity or quality level shown or specified shall be the minimum provided or performed by Contractor. The actual installation may comply exactly with the minimum quantity or quality specified, or it may exceed the minimum within reasonable limits. Refer uncertainties to SANBAG for a determination before proceeding.

C. Items indicated on the Plans but not included in the Specifications, or included in the Specifications but not indicated on the Plans, shall have the same effect as if indicated or included in both the Plans and Specifications.
   1. In case of conflict or inconsistency between the Plans and Specifications, Contractor shall request additional information or interpretation; any adjustment by Contractor without such official determination shall be at Contractor's own risk and expense.

1.5 REGULATORY REQUIREMENTS

A. Comply with all applicable requirements of the laws, codes, ordinances, and regulations of Federal, State, and Municipal authorities having jurisdiction where the Project is located, and obtain necessary approvals from all such authorities.

1.6 ACTION SUBMITTALS

A. Shop Drawings: The shop drawings shall indicate the manufacturer and model number of individual components. Show plans, sections, and elevations, indicating materials and products specified.

   1. Provide axonometric plans for conditions difficult to illustrate in two dimensions.

B. Engineering-assist Submittal: In addition to Shop Drawings, Product Data, and other required submittals, Contractor shall submit a statement, signed and sealed by the responsible design professional, for each product and system specifically assigned to the Contractor to be designed or certified by a design professional, indicating that the products and systems are in compliance with performance and design criteria indicated.
   1. Include listing of codes, loads, and other factors used as a basis in performing these design services.

1.7 INFORMATIONAL SUBMITTALS

A. Contractor's Quality Control (CQC) Plan: Submit a formal plan detailing Contractor's quality assurance and quality control activities and responsibilities. Submit in a format acceptable to SANBAG. The CQC Plan is due within 30 calendar days following receipt of Notice of Contract Award, but not later than 5 working days prior to initial session of the Pre-Construction Conference.
   1. Identify personnel, procedures, controls, instructions, tests, records, and forms to be used to carry out the Contractor's quality control responsibilities.
   2. Coordinate this Contractor's Quality control (CQC) Plan with the Contractor's construction schedule.
   3. Include a comprehensive schedule of Work which delineates required tests and inspections and Contractor-elected tests and inspections, including (a) Contractor-performed tests and inspections, as well as Subcontractor-performed tests and inspections, (b) Special Tests and Inspections pursuant to sub-Section 1.12 – Special Tests and Inspections, and (c) SANBAG-performed tests and inspections, including tests and inspections required to be performed by the Commissioning Authority and the Railroad Operators.
   4. Describe procedures for ensuring compliance with the Contract Documents requirements conducting iterative reviews and effectively managing the submittal process.
   5. Describe processes for continuous inspections and non-destructive testing to identify and correct deficiencies in the Work, in addition to specified testing and inspecting. Indicate types of corrective actions to bring non-conforming portions of the Work into compliance with standards of workmanship established by the Contract Documents requirements and approved mockups.
   6. Maintain testing and inspection reports, including a log of approved and rejected results. Indicate corrective actions either proposed or taken to bring non-conforming portions of the Work into compliance. Comply with requirements of all authorities having jurisdiction.

B. Contractor Quality Control Manager Qualifications: Assign a qualified, full-time individual who shall have experience as a quality control manager implementing field quality control programs and developing quality assurance procedures.

C. Contractor's Statement of Responsibility: When required by authorities having jurisdiction, submit a copy of Contractor's written statement to authorities having jurisdiction before starting work on engineered systems, sub-systems and components which shall include, but are not limited to:
   1. Temporary systems, assemblies and components for shoring, bracing, earth retaining, scaffolding, railing, forming, falsework and similar means and methods of the Contractor.
   2. Temporary and modified passenger platforms including, phasing, staging, and accessibility.
   3. Temporary and modified traffic signaling, street lights, striping, and signage.

D. Contractor's Testing Agency Qualifications: For testing agencies specified in sub-Section 1.09 -- Quality Assurance to demonstrate their capabilities and experience. Include proof of qualifications in the form of a recent report on the inspection (audit) of the testing agency by a recognized authority.

E. Schedule of Tests and Inspections: Prepare in tabular form and include the following:
   1. Specification Section number and title.
   2. Entity responsible for performing tests and inspections.
   3. Description of tests and inspection procedures, and use of test equipment.

4. Identification of applicable standards.
5. Identification of testing and inspection methods.
6. Number of tests or inspections required by testing standard.
7. Time schedule or time span for tests or inspections.
8. Requirements for obtaining samples for testing.
9. Unique characteristics of each quality control service rendered.

1.8 REPORTS AND DOCUMENTS

A. Tests and Inspection Reports: Prepare certified written reports specified in other Sections of these Specifications. Include the following data:
   1. Date of issue.
   2. Project title and number.
   3. Name, address, and telephone number of testing agency.
   4. Dates and locations of samples and tests or inspections.
   5. Names of individuals making tests and inspections.
   6. Description of the tested and inspected portion of the Work, and the test and/or inspected method.
   7. Identification of product and associated Specifications section.
   8. Complete test or inspection data.
   9. Test and inspection results, and interpretation of test results.
   10. Record of temperature, prevailing weather conditions at time of sampling, test, or inspection.
   11. Comments or professional opinion on whether tested or inspected Work complies, or not.
   12. Name and signature of laboratory inspector.
   13. Recommendations on re-testing or re-inspection, if applies.

B. Manufacturer Technical Representative Field Reports: Prepare written information documenting manufacturer's technical representative's tests and inspections specified in other Sections of these Specifications. Include the following data:
   1. Name, address, and telephone number of technical representative making the report.
   2. Statement on condition of substrates and their acceptability for installation of product.
   3. Statement that products at the Work Site comply with requirements.
   4. Summary of installation procedures being followed, whether they comply with requirements and, if not, what corrective action was taken.
   5. Results of operational and other proving tests and a statement of whether observed performance complies with requirements.
   6. Statement whether conditions, products, and installation will affect manufacturer's warranty.
   7. Other required items/actions indicated in individual Specifications sections.

C. Factory-authorized Service Representative Field Reports: Prepare written information documenting manufacturer's factory-authorized service representative's tests and inspections specified in other Sections of these Specifications. Include the following data:
   1. Name, address, and telephone number of factory-authorized service representative making the report.
   2. Statement that installed equipment complies with requirements.
   3. Results of operational and other proving tests, and a statement of whether observed performance complies with requirements.
   4. Statement whether conditions, products, and installation will affect manufacturer's warranty.
   5. Other required items/actions indicated in individual Specifications sections.

D. Permits, Licenses, and Certificates: For Owner's records, submit copies of permits, licenses, certifications, inspection reports, releases, jurisdictional settlements, notices, receipts for fee payments, judgments, correspondence, records, and similar documents, all established for compliance with standards and regulations bearing on performance of the Work.

1.9 QUALITY ASSURANCE

A. General: Qualifications paragraphs in this sub-Section establish the minimum qualification levels required; individual Specifications sections specify additional requirements.

B. Manufacturer Qualifications: A firm experienced in manufacturing products or systems similar to those indicated for this Project and with a record of successful in-service performance, as well as sufficient production capacity to produce required units.

C. Fabricator Qualifications: A firm experienced in producing products similar to those indicated for this Project and with a record of successful in-service performance, as well as sufficient production capacity to produce required units.

D. Installer Qualifications: A firm or individual experience in installing, erecting, or assembling work similar in material, design, and extent to that indicated for this Project, whose work has resulted in construction with a record of successful in-service performance.

E. Professional Engineer Qualifications: A California Professional Engineer legally qualified to practice in the jurisdiction where the Project is located and experienced in performing engineering services of the kind indicated. Engineering services are defined as those performed for installation, construction and maintenance of the infrastructure including, but not limited to a system, sub-system, assembly, component, or product similar in material, design, and extent to those indicated for this Project.

F. Specialists: Certain Specifications sections require that specific construction activities shall be performed by entities who are recognized experts in those operations. Specialists shall satisfy qualification requirements indicated and shall be engaged for the activities indicated.
   1. Requirements for specialists shall not supersede building codes and similar regulations governing the Work, nor interfere with local trade jurisdiction settlements and similar conventions.

G. Testing Agency Qualifications: An NRTL, an NVLAP, or an independent agency with the experience and capability to conduct testing or inspecting indicated, as documented according to ASTM D 329, and with additional qualifications specified in individual Sections of these Specifications; and, where required by the authorities having jurisdiction, a testing agency that is acceptable to these authorities, as follows:
   1. NRTL: A nationally recognized testing laboratory according to 29 CFR 1910.7.
   2. NVLAP: A testing agency accredited according to NIST's National Voluntary Laboratory Accreditation Program.
   3. Each testing agency shall be authorized by the several authorities having jurisdiction to perform testing and inspection services in connection with the Project.
   4. The testing agency shall employ inspecting and testing personnel who are duly certified by the following organizations for materials testing categories listed:
      a. ACI (American Concrete Institute): Concrete and laboratory
      b. ASNT (American Society for Non-destructive Testing): Metal fabrications and connections
      c. AWS (American Welding Society): Metal fabrications and connections.

H. Manufacturer Technical Representative Qualifications: An authorized representative of manufacturer who is trained and approved by manufacturer to observe and inspect the installation of manufacturer's products that are similar in material, design, and extent to those indicated for this Project.

I. Factory-authorized Service Representative Qualifications: An authorized representative of manufacturer who is trained and approved by manufacturer to inspect the installation of manufacturer's products that are similar in material, design, and extent to those indicated for this Project.

J. Pre-construction Testing: Where testing agency is indicated to perform pre-construction testing for compliance with specified requirements for performance and test methods, comply as follows:
   1. Contractor's responsibilities include all of the following:
      a. Provide test specimens that are representative of proposed products and construction.
      b. Submit specimens in a timely manner with sufficient time for testing and analyzing results to prevent delaying the Work.
      c. Provide sizes and configurations of site-assembled test assemblies and mockups, as well as laboratory mockups to adequately demonstrate the capability of products to comply with specified performance requirements.
      d. Build site-assembled test assemblies and mockups using installers who will perform the same tasks for the completed Work.
      e. Build laboratory mockups at testing facility using personnel, products and methods of construction indicated for the completed Work.
   2. Testing Agency Responsibilities: Submit a certified written report of each test, inspection, and similar quality assurance services to SANBAG with a copy to Contractor.

K. Mockups: Prior to installation of those portions of the Work requiring mockups, Contractor shall build mockups for each form or construction and finish required to comply with the following requirements, using materials required for the Work:
   1. Build mockups in a location, and of the size required or, if not indicated, then as directed by SANBAG.
   2. Notify SANBAG at least 7 days in advance of dates and times when the mockup(s) will be constructed.
   3. Employ supervisory personnel who will oversee mockup construction, Employ construction workers who will also be employed during construction of the Work.
   4. Demonstrate the proposed range of aesthetic effects, material qualities, and workmanship.
   5. Obtain approval of mockup(s) prior to performing subject portion of the Work, whether fabrication or construction.
      a. Allow 7 days for initial review and each subsequent review of each mockup.
   6. Maintain all mockups during construction in an undisturbed condition, intended as a standard for judging acceptability of the completed Work.
   7. Demolish and remove mockups from Work Site when so directed.

1.10 QUALITY CONTROL

A. Contractor's Responsibilities: Tests and inspections shall be the responsibility of the Contractor. Contractor shall perform additional quality control activities necessary to verify that the Work complies with the Contract Documents requirements, whether specified or not.
   1. Unless otherwise indicated elsewhere in the Contract Documents, Contractor shall provide quality control services required to verify that the Work complies with the Contract Document requirements, whether specified or not, in addition to testing and inspections required by the several authorities having jurisdiction.
   2. Quality control services are Contractor's responsibility. Contractor shall engage a qualified testing agency to perform required quality control services.
      a. Contractor shall not employ same entity engaged by Owner for testing and inspection unless agreed to, in writing, by Owner.
      b. Contractor shall notify testing agencies at least 48 hours in advance of time when the Work that requires testing or inspecting will be performed.
      c. Contractor shall submit a certified report, in duplicate, of each quality control service performed.
      d. Contractor shall submit additional copies of each written report directly to authorities having jurisdiction, when they so direct.
   3. Any testing or inspecting requested by Contractor but not required by the Contract Documents shall be Contractor's responsibility and sole expense.

B. Manufacturer Field Services: Where indicated, engage a factory-authorized service representative to inspect field-assembled components and equipment installation, including service connections. Report all results in writing.

C. Manufacturer Technical Services: Where indicated, engage a manufacturer's technical representative to observe and inspect the Work. Such services include participation in pre-installation conferences, examination of substrates and conditions, verification of materials used, observation of installer's activities, inspection of completed portions of the Work, and submission of written reports.

D. Re-testing/Re-inspection: Regardless of whether original tests or inspections were Contractor's responsibility, Contractor shall provide quality control services, including re-testing and re-inspecting, for any construction that replaced portions of the Work that failed to comply with the Contract Documents.

E. Testing Agency Responsibilities: Testing Agency shall cooperate with all parties, including SANBAG and Contractor, in the performance of Testing Agency's duties. Testing Agency shall provide qualified personnel to perform required tests and inspections.
   1. Notify SANBAG and Contractor promptly of irregularities or deficiencies observed in the Work during the performance of Testing Agency's services.
   2. Determine the location from which test samples will be taken and in which in-situ tests are conducted.
   3. Conduct and interpret tests and inspections, and state in each report whether the tested and inspected work complies with or deviates from specified requirements.
   4. Submit a certified written report, in duplicate, of each test, inspection, and similar quality control service performed.
   5. Testing Agency shall not release, revoke, alter, or increase the Contract Documents requirements, or approve or accept any portion of the Work.
   6. Testing Agency shall not, in any way, perform any duties of the Contractor.

F. Associated Services: Cooperate with testing agencies performing required tests, inspections, and similar quality control services, and provide reasonable auxiliary services as requested. Notify testing agency sufficiently in advance to permit timely assignment of testing and/or inspecting personnel.
   1. See also sub-Section 1.11 -- Quality Coordination procedures for further description of associated quality control services.

1.11 QUALITY COORDINATION

A. General: Coordinate sequence of Work activities to accommodate required quality assurance and quality control services with a minimum of delay and to avoid necessity of removing and replacing construction to facilitate testing and inspection.

B. Notify SANBAG at least 48 hours in advance of time when Work that requires testing or inspecting will be performed. Also provide the following in support of testing and inspection services:
   1. Access to the Work.
   2. Incidental labor and facilities necessary to facilitate tests and inspections.
   3. Adequate quantities of representative samples of materials that require testing and inspecting. Assist testing agency in obtaining samples.
   4. Facilities for storage and field curing of test samples.
   5. Preliminary design mix proposed for use for material mixes that may require production control by testing agency.
   6. Security and protection for samples and for testing and inspecting equipment either cured or stored at Work Site.

C. Schedule of Tests and Inspections: Prepare a schedule of tests, inspections, and similar quality control services required by the Contract Documents, which component of Contractor's Quality Control Plan shall be submitted concurrently with Contractor's construction schedule, but no later than 30 days after Notice to Proceed.

1.12 SPECIAL TESTS AND INSPECTIONS

A. Special Tests and Inspections: SANBAG will engage a qualified special inspector to conduct special tests and inspections as required by the authorities having jurisdiction for enforcing code compliance.

B. It shall be understood that the Special Inspector's activities do not relieve the Contractor of his obligations under this Section 01 40 00 of these Specifications.

1.13 SOURCE OF SUPPLY AND QUALITY OF MATERIALS

A. SANBAG shall approve the source of supply of each type of the materials supplied by Contractor before the Contractor or Subcontractor purchases or delivers these materials to the Project.
   1. Promptly after receiving the Contract award, Contractor shall notify SANBAG of all proposed material sources. If it is found after trial that sources of supply previously approved do not produce uniform and satisfactory products, or if the product from any source proves unacceptable at any time, Contractor shall furnish materials from other sources as approved by SANBAG.

B. Only materials conforming to these Specifications and approved in advance by SANBAG may be used in the Work subject to verifying inspection or tests at any time during their preparation or use. No materials or products determined to be unsatisfactory can be used in the Work.

PART 2 - PRODUCTS (NOT USED)

PART 3 - EXECUTION

3.1 INSPECTION AND TESTING PROCEDURES

A. Contractor shall provide SANBAG with full access to the Work and reasonable time for inspection for ascertaining whether or not the Work is performed in accordance with the requirements and intent of the Contract.

B. No Work shall be covered or materials used without making the Work, products or materials available for inspection by SANBAG and authorities having jurisdiction; any Work that is required to be uncovered, removed or replaced shall be at Contractor's own expense.

C. Inspection will not relieve Contractor from the responsibility of the quality of this Work and obligation to perform the Work in accordance with the requirements of the Contract Documents.

D. All materials and every process of manufacture and construction are subject to inspection at all times. SANBAG and authorities having jurisdiction shall have free access to all such operations. Contractor shall furnish necessary materials and SANBAG shall have the right to select suitable samples of materials for testing or examination which Contractor shall supply without charge. In case such samples must be shipped to some other point for inspection or testing, Contractor shall box or crate samples as necessary and shall deliver them to points designated for shipment without charge.
   1. Omission of inspection shall not relieve Contractor of its obligation to perform the Work required by the Plans and Specifications.

2. Non-conforming or rejected Work and material shall be removed promptly from the Worksite, and Contractor, at its sole expense, shall promptly remove, reconstruct, replace, and make good any defective Work.
3. Oversight or error in the judgment of inspectors, or previous acceptance of the Work shall not relieve Contractor from its obligation to correct any defects, wherever and whenever discovered, at Contractor's sole expense.

E. Adequate facilities shall be made available for the necessary tests and inspections, with free access to all parts of the Work also available, at all reasonable times. Contractor shall have appropriate provisions inserted into each Subcontract it enters into providing for the necessary documentation, facilitation, or in-plant services in support of testing and inspection by SANBAG.

F. In the event Contractor does not correct non-conforming Work or remove rejected materials within a reasonable time fixed by written notice, SANBAG may direct that removals and corrections be performed by other contractors. All charges for such removals and corrections shall be deducted from Contractor's payments due under this Contract or from proceeds paid by Contractor's surety.

G. Acceptance or rejection by the Railroad Operators shall in no way relieve the Contractor of responsibility for performing Work in accordance with the Contract Documents.
1. After completing the Work, a final inspection will be made and any previous inspection or acceptance will not preclude rejection at time of the final inspection for any item that is not satisfactory to SANBAG.

H. In the event, within such period of time as may be prescribed by law or by the terms of any applicable special warranty required by the Contract, whichever warranty is longer, for any Work found to be defective or non-conforming, Contractor shall correct it promptly after receipt of written notice from SANBAG. The warranty obligation shall survive acceptance of the Work or termination of the Contract.
1. In the event SANBAG prefers to accept or not require correction of defective or non-conforming Work, SANBAG may do so instead of requiring its removal and correction, in which case SANBAG shall determine an appropriate sum to be deducted from the Contract Price or otherwise charged against the Contractor, which determination shall be final and binding upon the Parties. Such monetary adjustment shall be effected whether or not final payment has been made.

I. All defective Work, which has been rejected, shall be remedied or removed and replaced by Contractor, at its own expense, in a manner acceptable to SANBAG.

J. SANBAG may charge the Contractor for any additional costs it incurs for tests and inspections, wherever and whenever Work is not ready at the time indicated by Contractor's notice or when an additional re-inspection is necessitated by prior rejection.

K. SANBAG will have access, at all reasonable times, to Contractor's documents, calculations, supporting materials, data, and information concerning the Work, including computer programs and printouts, which supportive information SANBAG may determine is required to evaluate the Work properly and expeditiously.

3.2 TESTS AND INSPECTIONS LOG

A. Prepare a complete record of tests and inspections include the following data:
1. Date test or inspection was conducted.
2. Description of the Work tested or inspected.
3. An Inspection Checklist appropriate to the portion of Work.
4. Date test or inspection results were transmitted to SANBAG and authorities having jurisdiction.
5. Identification of testing agency or special inspector conducting the particular test or inspection service.

B. Maintain log at Work Site. Post changes and modifications as they occur. Provide access to the test and inspection log for SANBAG's reference during normal working hours. No notice will be required for SANBAG's access to the Contractor's test and inspection logs and associated documents.

3.3 REPAIR AND PROTECTION

A. General: On completion of testing, inspecting, sampling, and similar services, repair damaged construction and restore substrates and finishes.

B. Provide materials and comply with installation requirements specified in other Specification Sections. Restore patched areas and extend restoration into adjoining areas with durable seams that are as nearly invisible as possible.

C. Protect construction exposed by or for quality control service activities.

D. Repair and protection are the Contractor's sole responsibility, regardless of the assignment of responsibility for quality control services.

3.4 SANBAG'S REMEDIES FOR DEFICIENT WORK

A. If any Work provided by Contractor is determined to be deficient, SANBAG shall provide written notice to Contractor enumerating such deficiencies and may thereafter take one or more of the following actions:
   1. Require Contractor to promptly remove rejected Work from the Project at Contractor's own expense and without any extension of Contract Time;
   2. Require Contractor to re-perform, repair, or replace rejected Work, products, materials, or other items at Contractor's own expense and without any extension of Contract Time;
   3. Withhold payments otherwise due to Contractor hereunder;
   4. Have remedial Work performed and products or materials provided by others at Contractor's sole expense and without any extension of Contract Time; and
   5. Terminate the Contract and obtain the remedies provided for therein.

B. Corrected or re-performed remedial Work, and replaced or repaired products/materials, shall be subject to all of the Contract Documents requirements, including without limitation all standards of performance set forth under this Contract.

C. Costs for re-testing and re-inspecting construction that replaces or is necessitated by work that failed to comply with the Contract Documents will be charged to Contractor and the Contract Price will be adjusted by Change Order.

PART 4 - MEASUREMENT AND PAYMENT

A. Work of this Section is considered incidental to Work under other payment items and no separate measurement or payment will be made to the Contractor for Work of this Section.

END OF SECTION

SECTION 01 50 00
TEMPORARY FACILITIES AND CONTROLS

PART 1 - GENERAL

1.1 SUMMARY

A. This Section includes Work Site mobilization of personnel, equipment, supplies, and appurtenances, all in ready and satisfactory working and operational order, which the Contractor intends to use for the Work; for the establishment of all temporary offices and Contractor-owned structures and other temporary facilities necessary to perform the Work; proper safety training of project personnel; and for incidental Work and operations which must be performed prior to beginning Work on the various Contract items. Also included is the demobilization or removal of all personnel, equipment, supplies, appurtenances, Contractor-owned structures, temporary facilities, materials, and debris from the Work Site and restoration of site and surrounding properties, affected by the Contractor's activities, to specified conditions.

1.2 RELATED REQUIREMENTS

A. Section 01 35 23 - SANBAG Site Safety Requirements.

B. Section 01 35 44 - Environmental Safety and Health Program.

C. Section 01 56 37 - Worksite Security Requirements.

D. Section 01 57 19 - Temporary Environmental Controls.

1.3 INFORMATIONAL SUBMITTALS

A. Site Plan: Show temporary facilities, utility hookups, staging areas, and parking areas for construction personnel.

B. Fire Safety Program: Show compliance with requirements of NFPA 241 and authorities having jurisdiction. Indicate the Contractor's personnel responsible for management of fire prevention program.

C. Dust Control Plan: Submit coordination drawing and narrative that indicates the proposed dust control measures for use, locations, and time frame for their implementation. Identify further options if proposed measures are later determined to be inadequate. Include the following:
   1. Locations of dust control at each phase of work.
   2. Watering duration and rewatering cycle, if watering is proposed as a dust-control measure.
   3. Waste handling procedures.
   4. Other dust-control measures.

1.4 QUALITY ASSURANCE

A. Electric Service: Comply with NECA, NEMA, and UL standards and regulations for temporary electric service. Install service to comply with NFPA 70 and the requirements of jurisdictional authorities.

B. Tests and Inspections: Arrange for authorities having jurisdiction to test and inspect each temporary utility before use. Obtain required certifications and permits.

C. Accessible Temporary Egress: Comply with applicable provisions in the U.S. Transportation Barriers Compliance Board's ADA-ABA Accessibility Guidelines and ICC/ANSI A117.1.

PART 2 - PRODUCTS

2.1 TEMPORARY FACILITIES

A. The Contractor shall provide storage and fabrication sheds amply sized, furnished, and equipped to accommodate materials and equipment for construction operations and shall store combustible materials apart from buildings and structures. Provide portable, UL rated; with class and extinguishing agent as required by locations and classes of fire exposures.

2.2 PROJECT SIGN

A. One project sign, also called Construction Sign, shall be provided and installed at the location directed by SANBAG. The project sign shall be of similar detail as shown on SCRRA Engineering Standard Drawing ES5201.

PART 3 - EXECUTION

3.1 PRESERVATION OF PROPERTY OR PROTECTION OF PROPERTY

A. The Contractor shall be responsible for the protection of public, private, and SANBAG property adjacent to and within the Work Site, and shall be responsible for bearing the cost and performing the repair work necessary to restore or repair damaged areas. The Contractor shall supply all firefighting equipment, supplies, and personnel, and perform all Work required by the laws and regulations pertaining to fire prevention.

B. Due care shall be exercised to avoid injury to existing improvements or facilities on adjacent property. The Contractor shall provide and install suitable safeguards to preserve and protect properties adjacent to the Work Site from injury or damage. If such properties are injured or damaged by reason of the Contractor's operations, they shall be restored at the Contractor's sole expense. Damaged properties shall be repaired and restored to a condition as good as when the Contractor entered upon the Work Site. SANBAG may make or cause to be made such temporary repairs as are necessary to restore to service any damaged property. Place steel plates to cover trenches and excavation outside of fenced construction areas at all times that Work is not ongoing. The steel trench plate shall be a minimum of 1 inch thick, with anti-slip coating or treatment and having sufficient bearing surface to support heavily loaded trucks and emergency equipment. The steel traffic plate shall be anchored and have approach ramping against movement.

3.2 STAGING AND LAYDOWN AREAS

A. Staging and laydown areas not indicated in the Contract Documents shall be requested in writing and approved by SANBAG. This approval may or may not be granted by SANBAG. No equipment may be operated or materials stored or placed for any period of time in areas closer than 25 feet from live tracks without EIC pre-approval. The Contractor shall provide a security fence to enclose each laydown or staging area. The Contractor shall furnish SANBAG with photographs of all staging and laydown areas to document their condition prior to the start of Work.

B. The Contractor shall confine Work Site operations to areas permitted by law, ordinances, permits, and the Contract Documents.

C. The Contractor shall relocate stored products, equipment, and materials that interfere with train operations, public and private utilities, or the visibility at railroad crossings.

D. The Contractor shall coordinate construction operations and if necessary secure additional areas from adjacent property owners, at no cost to SANBAG. The Contractor shall submit a plan showing areas proposed for staging and laydown for SANBAG's approval before use.

E. In addition to site utilization limitations and requirements indicated on Contract Documents, the Contractor shall provide temporary parking areas for construction purposes and divide available space equitably among Subcontractors and other entities needing access and space.

F. The Contractor shall schedule deliveries, so as to minimize space and time requirements for storing material and equipment, with minimal disruption to adjacent property owners and their operations.

3.3 ACCESS AND CONSTRUCTION ROADS

A. Access to the Work Site from existing public roads, private property, or along the right-of-way of SANBAG shall be arranged for and provided by the Contractor. SANBAG assumes no responsibility for the condition or maintenance of any road or structure thereon that may be used by the Contractor in performing the Work or in traveling to and from the Work Site.

B. Existing roads shall be used whenever possible for access to the Work Site. Construction of new roads or use of existing roads shall be subject to approval by the appropriate governmental agency, adjacent property owner(s), and SANBAG. Temporary roads shall be rehabilitated upon termination of use. The roads shall be graded to conform to original topography to the greatest extent possible. Cut slopes shall be reduced to a grade consistent with adjacent topography, protected from erosion, and revegetated.

C. The Contractor's haul or service road shall be located so that, upon the completion of the Work, a continuous road, where possible, will remain on the right-of-way throughout the entire length of the project. SANBAG will designate the location of the road.

D. At locations where the proposed access or construction road would cross existing roads, highways, or at other locations where the Contractor’s equipment would cross existing roads or highways, the Contractor shall obtain the necessary approval and permits from the appropriate governmental agency(ies) for such crossings and detours as may be required. The Contractor shall maintain such crossings and detours in safe condition for passage of all traffic; shall provide flag persons and watchmen as required; and shall furnish and maintain temporary drainage diversions, guard fences, lights, warning signs, and other facilities necessary to protect traffic. Public access to the Contractor’s road shall be controlled by cable barrier or gate that is locked with a series of padlocks including SANBAG and the Contractor locks. Such gates or barriers are to be maintained in a closed configuration to prohibit unauthorized access.

E. The Contractor may, upon approval of SANBAG, construct temporary railroad crossings for the purpose of performing the Work. An EIC shall be required at all such crossings at all times during construction. A physical barrier shall protect the crossing when not in use. Temporary crossings shall be removed upon completion of the Work.

F. The Contractor shall provide dust control treatment that is non-polluting and non-tracking. Reapply treatment as required to minimize dust.

G. Upon completion of the Work, restore access and staging areas to a condition that is equal to or better than that prior to the Contractor entry, and as accepted by SANBAG. All residual materials shall be removed and all areas used shall be bladed smooth upon completion of use. The Contractor shall photograph the project site(s) and submit the photographs to SANBAG to demonstrate that staging and access areas have been restored to the pre-construction condition.

H. Fences, walls, signs, and gates affected by the Contractor’s access to the right-of-way(s) shall be restored to full serviceability prior to demobilization.

I. Maintain traffic controls, access for fire-fighting equipment and access to fire hydrants. Protect existing site improvements that are to remain, including, but not limited to, curbs, pavement, and utilities.

3.4 LIMITATION ON THE USE OF HEAVY EQUIPMENT

A. If the Contractor anticipates using any vehicles or equipment over 20,000 pounds (loaded) during the performance of the Work, dimensions and weights of such equipment shall be submitted to SANBAG for approval prior to use.

B. Unless expressly permitted elsewhere in the Contract Documents, the Contractor shall not operate construction equipment or vehicles of any kind which, laden or unladened, exceed the maximum weight limits set forth in Division 15 of the California Vehicle Code over completed or existing base, surfacing, pavement, or structures.

3.5 HAZARDOUS CHEMICALS, WASTES AND MATERIALS

A. Hazardous chemicals, wastes, and materials are defined as any product, substance, chemical, or material whose nature, quantity or intensity of existence, use, manufacture, disposal, transportation, spill, release, or effect, either by itself or in combination with other chemicals or materials in, on, or about the Work Site: (a) is or becomes potentially injurious to the public health, safety or welfare, the Environment, or the Work Site; (b) is or becomes regulated or monitored by any governmental authority; or (c) may, according to statutory or common law theory, such as nuisance (public or private), waste, trespass, negligence, strict liability, or tort, be a basis for liability in tort, or be a basis for liability to third parties.

B. The Safe Drinking Water and Toxic Enforcement Act of 1986 (Proposition 65) prohibits employers from knowingly discharging or releasing a chemical or other material known to the State of California to cause concern, birth defects, or other reproductive harm into water or onto land where such chemical passes or probably will pass into any source of drinking water. Notwithstanding any provisions in this Act exempting the Contractor, the Contractor hereby agrees to comply with all provisions of the Act relating to the discharge of hazardous chemicals and materials on the Work site.

C. The Contractor's employees and Subcontractors of any tier shall not discharge such chemicals or materials on the Work site that will result in the discharge of such chemicals, and shall, upon completion of performance of all other duties under this Contract, remove all supplies, materials, and waste remaining on the job site which if exposed, could result in the discharge of such chemicals, materials, and wastes.

D. The Contractor, the Contractor's employees, and Subcontractors of any tier shall also comply with the State of California anti-smoking laws that, in part, prohibit smoking in the workplace and in enclosed areas.

E. Should the Contractor, the Contractor's employees, Subcontractors of any tier, or their employees fail to comply within 24 hours from receipt of written notice of noncompliance from SANBAG, or other Authority of competent jurisdiction, or within the time of an abatement period specified by such Authority of competent jurisdiction, whichever period is shorter, SANBAG may give notice of default to the Contractor. Failure of SANBAG, or other Authority of competent jurisdiction to issue notice to the Contractor shall not relieve the Contractor of its responsibilities under this Section.

3.6 PESTICIDES, FUEL OIL, AND GREASE

A. The Contractor shall comply with all local, state, and federal rules and regulations of the Department of Food and Agriculture, the Department of Health, the Department of Industrial Relations, the Department of Toxic Substance Control, and all other agencies that govern the use of pesticides, fuel oil, and grease required in the performance of the Work. Fuel, oil, and grease include any crude oil or any products, byproducts, or fractions thereof.

B. Pesticides include but shall not be limited to herbicides, insecticides, fungicides, rodenticides, germicides, nematocides, bactericides, inhibitors, fumigants, defoliants, desiccants, soil sterilants, and repellents.

C. Any substance or mixture of substances intended for preventing, repelling, mitigating, or destroying weeds, insects, diseases, rodents, or nematodes, and any substance or mixture of substances intended for use as a plant regulator, defoliant, or desiccant, shall be considered as a pesticide.

3.7 DISPOSAL OF MATERIALS OUTSIDE THE WORK SITE

A. Unless otherwise stated elsewhere in the Contract Documents, the Contractor shall make its own arrangements for disposing of materials outside the Work Site. The Contractor shall obtain written permission or permit from the property owner on whose property the disposal is to be made. Prior to the disposal of any material at the intended location, the Contractor shall submit said written permission or permit to SANBAG for approval, together with a written release from the property owner absolving SANBAG from any and all responsibility related to the disposal of material on said property.

B. Disposal of all Hazardous Materials shall be done in accordance with all laws and regulations. Copies of a required regulatory documentation, including copies of final manifests, shall be submitted to SANBAG.

3.8 SECURITY AND PROTECTION FACILITIES INSTALLATION

A. Site Enclosure Fence: Before construction operations begin, provide a site enclosure fence in a manner that will prevent people and animals from easily entering the site except by entrance gates.
   1. Extent of Fence: As required to enclose the entire Project site or that portion determined sufficient to accommodate construction operations.
   2. Maintain security by limiting the number of keys and restricting distribution to authorized personnel. Furnish one set of keys to SANBAG.

B. Security Enclosure and Lockup: Install temporary enclosures around partially completed areas of construction. Provide lockable entrances to prevent unauthorized entrance, vandalism, theft, and similar violations of security. Lock entrances at the end of each work day.

C. Barricades, Warning Signs, and Lights: Comply with requirements of authorities having jurisdiction for erecting structurally adequate barricades, including warning signs and lighting.

D. Temporary Egress: Maintain temporary egress from existing occupied facilities as indicated and as required by authorities having jurisdiction.

E. Covered Walkway: Erect protective, covered walkways where identified on the Plans or directed by SANBAG for passage of individuals through or immediately adjacent to the Project site. Coordinate with entrance gates, other facilities, and obstructions. Comply with regulations of authorities having jurisdiction and requirements indicated on Drawings.
   1. Construct covered walkways using scaffold or shoring framing.
   2. Provide overhead decking, protective enclosure walls, handrails, barricades, warning signs, exit signs, lights, safe and well-drained walkways, and similar provisions for protection and safe passage.
   3. Paint and maintain appearance of walkway for duration of the Work.

F. Temporary Fire Protection: Install and maintain temporary fire-protection facilities of the types needed to protect against reasonably predictable and controllable fire losses. Comply with NFPA 241; manage the fire-prevention program.
   1. Prohibit smoking in construction areas.
   2. Supervise welding operations, combustion-type temporary heating units, and similar sources of fire ignition according to Contract requirements.
   3. Develop and supervise an overall fire prevention and fire protection program for personnel at the Project site. Review needs with the local fire department and establish procedures to be followed. Instruct personnel in methods and procedures. Post warnings and information.

4. Provide temporary standpipes and hoses for fire protection. Hang hoses with a warning sign stating that hoses are for fire-protection purposes only and are not to be removed. Match hose size with outlet size and equip them with suitable nozzles.

3.9 PUBLIC SAFETY AND CONVENIENCE

A. The Contractor shall conduct its operations so as to offer the least possible obstruction and inconvenience to the public and shall have under construction no greater length or amount of work than can be prosecuted properly with due regard to the rights of the public. The Contractor shall control temporary noise from construction equipment by using work hour controls and maintenance of muffler systems on machinery.

B. Construction shall be conducted so as to cause as little inconvenience as possible to adjacent property owners. Convenient access to driveways, houses and buildings along the line of Work shall be maintained and temporary approaches to crossing or intersecting highways shall be provided and kept in good condition. When the adjacent property owner's access is to be eliminated and replaced by other access, the existing access shall not be closed until the replacement access is facilitated.

C. The Contractor, at its expense, shall provide adequate safeguards, safety devices and protective equipment and take any other needed action both of its own volition and responsibility or that which SANBAG may determine is reasonably necessary to protect property, life, health and public safety in connection with the performance of the Work covered by the Contract Documents.

D. The Contractor shall make all reasonable efforts to maintain good will among landowners, tenants, lessees, and members of the general public and shall not knowingly violate any right of such persons in the performance of the Work. To this end, the Contractor specifically agrees to not:
   1. Leave gates, gaps, or fences open, unattended or insecurely fastened.
   2. Use private driveways or roadways without Authority.
   3. Use land beyond limits of the right-of-way without Authority
   4. Leave trash or debris on the land.
   5. Permit the personal misconduct of its employees or any of its Subcontractor’s employees.

E. In the event the Contractor's operations cause injury to any persons or damage to public or private property, including above and below ground structures, the Contractor shall immediately contact emergency services for the local Authority and within twenty-four (24) hours, give notification in writing to SANBAG of such damage or injury. The Contractor shall be responsible and liable for all damages and injuries.

F. Unless otherwise noted, all construction operations shall preserve existing drainage paths and vehicular and pedestrian access. The Contractor shall also regularly attend to dust, mud, trash, noise, debris, etc., caused by construction operations to prevent a public nuisance.

G. All paved areas, including asphalt concrete berms cut or damaged as a result of construction, shall be replaced with similar materials of equal thickness to match the existing adjacent undisturbed areas, except where specific resurfacing requirements have been called for in the Contract Documents or in the requirements of the agency issuing the permit. All temporary and permanent pavements shall conform to the requirements of the affected pavement owner. All pavement that is subject to partial removal shall be neatly saw-cut in straight lines.

H. In order to obtain a satisfactory junction with adjacent surfaces, the Contractor shall saw-cut back and trim the edge of the surface so as to provide a clean, sound, vertical joint before temporary or permanent replacement of an excavated or damaged portion of pavement. Damaged edges of pavement along excavations and elsewhere shall be trimmed back by saw-cutting in straight lines. All pavement restoration and other facilities restoration shall be constructed to finish grades compatible with adjacent undisturbed pavement.

I. Where sidewalks have been removed for purposes of construction, or damaged, the Contractor shall place properly protected, suitable temporary sidewalks, promptly after backfilling, and shall maintain them in satisfactory condition until the final restoration thereof has been made.

3.10 STATION PLATFORM AND PASSENGER ACCESS

A. The Contractor shall conduct its operations so as to offer the least possible obstruction and inconvenience to the traveling public accessing and utilizing the track platforms for SANBAG train operations and AMTRAK train operations. The Contractor shall have the required minimum platform length including temporary platforms and number of tracks available for use by SANBAG and the Railroad Operators.

B. The Contractor must construct or maintain two entrance / egress points or walkways to every platform or partial platform which is in operation for revenue service. These walkways (minimum 8 feet width) must be maintained and remain unblocked until train operations cease for the day on that track.

C. The Contractor shall remove the existing mini-high platforms, infill voids with concrete to restore platform surface and construct temporary mini-high platforms which can be moved and anchored into new locations as required accommodating the temporary platform length and location changes throughout the Contractors Work. The Contractor will be required to move these temporary mini-high platforms as directed by SANBAG.

D. The Contractor shall provide temporary lighting for temporary platforms including ingress and egress in accordance with Specification 26 52 00 Interior and Exterior Lighting.

3.11 DISRUPTION MITIGATION

A. SANBAG, SANBAG's Contractors and other railroads may occupy the Work site during the entire construction period for the conduct of SANBAG's and the railroad's normal operations. The Contactor shall cooperate with SANBAG and the railroads, through SANBAG, in scheduling operations to minimize conflicts so as to not interfere or impair the normal operation of SANBAG or other railroads.

B. The Contractor shall develop and submit for SANBAG's approval a disruption mitigation plan that identifies and establishes criteria for the performance of the Work that requires coordination and sequencing based on the operational requirements of SANBAG and the other railroads, and to allow the free flow of public traffic within the public rights-of-way. The Contractor shall incorporate operational data and information and requirements given by SANBAG, other railroads, and local municipal transportation agencies in developing such plan, and in planning and scheduling its work to prevent interruption or impairment of the normal operations of SANBAG, the other railroads, and public traffic. The Contractor shall avoid disruptions to the normal operations of SANBAG, other railroads, and public traffic, and shall plan, schedule, coordinate and construct the Work in such a way as to accommodate the normal operations of SANBAG, other railroads, and public traffic. The Contractor must always maintain sufficient train platform access and infrastructure to prevent any delay to railroad passengers boarding and de-boarding trains.

C. Upon the completion of each day's Work, the Contractor shall make the active railroad tracks and facilities suitable for the passage of trains. The operation of trains over portions of the Work not completed will be in accordance with the FRA requirements. The operation of trains over portions of the Work will not constitute Beneficial Occupancy.

3.12 OPERATION, TERMINATION, AND REMOVAL

A. Temporary Facility Changeover: Do not change over from using temporary security and protection facilities to permanent facilities until Substantial Completion.

B. Termination and Removal: Remove each temporary facility when need for its service has ended, when it has been replaced by authorized use of a permanent facility, or no later than Substantial Completion. Complete or, if necessary, restore permanent construction that may have been delayed because of interference with a temporary facility. Repair damaged Work, clean exposed surfaces, and replace construction that cannot be satisfactorily repaired.
   1. Materials and facilities that constitute temporary facilities are the property of the Contractor. SANBAG reserves the right to take possession of Project identification signs.
   2. Remove temporary roads and paved areas not intended for or acceptable for integration into permanent construction. Where an area is intended for landscape development, remove soil and aggregate fill that do not comply with the requirements for fill or subsoil. Remove materials contaminated with road oil, asphalt, other petrochemical compounds, and other substances that might impair the growth of plant materials or lawns. Repair or replace street paving, curbs, and sidewalks at temporary entrances, as required by authorities having jurisdiction.

PART 4 - MEASUREMENT AND PAYMENT

A. Work of this Section is considered incidental to Work under other payment items and no separate measurement or payment will be made to the Contractor for Work of this Section, except as noted below in B - Mobilization and Demobilization

B. Mobilization and Demobilization:
   1. Mobilization and demobilization (including but not limited to temporary facilities, safety, security, equipment mobilization, survey, insurance, workmen's comp) will be measured and paid for as one (1) item completed and as lump sum. This price shall be full compensation for furnishing all labor, materials, tools, equipment, supplies, supervision, and incidentals necessary for the Work of this Section.
   2. The Contract Price will be paid as follows:
      a. When 10 percent of the awarded Contract Price(s) is earned, excluding bonds, insurance, mobilization, demobilization and amount paid for materials on hand, 40 percent of the amount bid for mobilization and demobilization will be paid.
      b. When 75 percent of the awarded Contract Price(s) is earned, excluding bonds, insurance, mobilization, demobilization and amount paid for materials on hand, 60 percent of the amount bid for mobilization and demobilization will be paid.
      c. 100 percent of the amount bid for mobilization and demobilization will be paid after SANBAG has determined that the Work is complete in accordance with the Contract Documents, including technical specifications, and the Contractor has left the Work Site in a clean and acceptable condition.

END OF SECTION

SECTION 01 55 26
MAINTENANCE AND PROTECTION OF TRAFFIC

PART 1 - GENERAL

1.1 SUMMARY

A. This Section specifies provisions for the Contractor furnishing, erecting and maintaining temporary barricades, changeable message signs, signs, flaggers, lights, road surfaces, pavement markings for detours, object markers and other safeguards necessary to protect the safety of the public during performance of the Project Work.

1.2 RELATED REQUIREMENTS

A. Section 01 35 23 - SANBAG Site Safety Requirements.

B. Section 01 50 00 - Temporary Facilities and Controls.

C. Section 01 56 37 - Worksite Security Requirements.

1.3 REFERENCE STANDARDS

A. The Contractor shall comply with provisions of the most recent edition, including all addenda, of the following codes, Specifications, standards, and recommenced practices, except as otherwise indicated:
   1. CPUC - California Public Utilities Commission General Orders.
   2. CALTRANS - State of California Department of Transportation May 2006 Standard Specifications and Standard Plans.
   3. CAMUTCD - California Manual on Uniform Traffic Control Devices.
   4. SSPWC - Standard Specifications for Public Works Construction
   5. WATCH - Work Area Traffic Control Handbook
   6. United Stated Code 49 CFR Part 234 – FRA Grade Crossing Safety Requirements (49 CFR 234.5 Definitions)
   7. City of San Bernardino Standards

1.4 PROCEDURAL REQUIREMENTS

A. The Contractor shall provide construction signs, barricades, delineators, warning lights, Changeable Message Sign (CMS) messages in advance of and during construction and all other devices used to implement the plan shall comply with CAMUTCD or WATCH Manual, and Local Agency permit requirements. Providing all temporary warning devices in the designated areas of the Project, as necessary, to convey traffic as required by the permits.

B. The Contractor shall provide two appropriately equipped flaggers for each at-grade signalized highway crossing(s) impacted by Contractor's operations and at which highway warnings signals (flashers and/or gates) are not properly operating or impaired and continuously operating. The Contractor's flaggers must remain at the crossing until the highway warning signals are restored to service and tested as required in accordance with the Railroad Operators.

C. Flashing yellow beacons shall be used on all W20-1 signs and all Type II barricades guarding the work area overnight.

D. The Contractor shall have all signs, delineators, barricades, and other devices properly installed prior to commencing construction. All signs shall be reflectorized and standard size. All delineators shall be 28" minimum portable, reflectorized and maintained erect in indicated position at all times, and shall be repaired, or cleaned as necessary to preserve their appearance and continuity.

E. Additional traffic controls, signs, delineators or barricades may be required in the field. The Contractor shall be responsible for the placement of any additional devices necessary to assure safety to the public at all times during construction.

F. Post “Temporary No Parking Tow Away" signs defining the time and date of any such restriction 72 hours prior to work.

G. The Contractor shall be responsible for location and protection of traffic signal loop-sensors and signal and interconnect conduits. Where damage is caused by the Contractor's operation, the Contractor shall replace damaged City facility at no cost to SANBAG or local jurisdiction.

1.5 DETOUR COORDINATION AND APPROVAL

A. Detour: In no case shall traffic be diverted from the existing traveled way without prior approval of SANBAG and appropriate municipalities and local agencies. The following representatives of appropriate local agencies shall be notified 48 hours in advance of any detour or construction activities:
   1. City/Field Engineer.
   2. Traffic Engineer.
   3. Police Department (give location and duration).
   4. Fire Department.
   5. Transit Buses.

B. Detour striping will not be permitted on any finish course of asphalt concrete pavement.

PART 2 - PRODUCTS

A. All striping and marking shall conform to Section 310-5.6 of the Standard Specification for Public Works Construction. Temporary removable striping tape (detour grade) may be used in lieu of painted striping.

PART 3 - EXECUTION

A. All traffic control devices shall be installed in accordance with Caltrans May 2006 Standard Specifications and WATCH, Standard Plans; and CAMUTCD. In addition to work included above, the Contractor shall furnish and install guide markers and delineators at the locations indicated on the Contract Documents and where directed by SANBAG.

B. The Contractor shall provide for access to all adjacent properties during working hours. Construction operations shall be conducted in such a manner as to cause as little inconvenience as possible to abutting property owners/operators. The Contractor shall provide access to pedestrian all times. Construction operations shall be conducted in such a manner as to cause as little inconvenience as possible to pedestrian. Pedestrian shall be protected as required by CAMUTCD, Part 6D-1 or WATCH Manual Latest Edition, Section 11.

C. The Contractor shall maintain on a 24 hour basis all signs, delineators, barricades, etc., to ensure proper flow and safety of traffic.

PART 4 - MEASUREMENT AND PAYMENT

A. Work of this Section is considered incidental to Work under other payment items and no separate measurement or payment will be made to the Contractor for Work of this Section.

B. The scope of this Section shall include, but is not limited to, furnishing all labor, materials, tools and equipment including changeable message signs per Local Agency permit requirements, supplies, supervision including preparing traffic control plans and obtaining traffic control and encroachment permits, and incidental materials and work necessary for controlling traffic during construction as described by the Contract Documents or required by the authorities having jurisdiction.

END OF SECTION

This page intentionally left blank.

SECTION 01 56 37
WORK SITE SECURITY REQUIREMENTS

PART 1 - GENERAL

1.1 SUMMARY

A. This Section addresses providing, operating, and maintaining security at the Work Site during construction. "Security" refers to the protection of SANBAG and SCRRA property, and the property of the Contractor from theft, vandalism, pilfering or other destructive activities. It is the Contractor's sole responsibility to provide protection for any property (including equipment and supplies) under the Contractor's care, custody, and control.

1.2 RELATED REQUIREMENTS

A. Section 01 35 23 - Site Safety Requirements.

B. Section 01 50 00 - Temporary Facilities and Controls.

1.3 REQUIREMENTS

A. The Contractor shall establish, implement, and maintain an effective, site-specific Security and Loss Prevention Program (SLPP). The Contractor is solely responsible for record keeping and for ensuring that Subcontractors are informed of and comply with the SLPP.

B. The Contractor shall comply with CCR Title 8, as well as all other federal, state, and local regulations, statutes, and codes applicable to security operations.

C. Compliance with all parts of this Section shall be considered entirely the responsibility of the Contractor. No delays to the Contractor Contract Time relating to any Work Site Security requirements will be allowed by SANBAG.

D. The SLPP shall comply with CFR 1926.800 (b) (3), which states: "The employer shall control access to all openings to prevent unauthorized entry underground. Unused chutes, manways, or other openings shall be tightly covered, bulkheaded, or fenced off and shall be posted with warning signs indicating 'Keep Out' or similar language." The SLPP shall include methods of protecting physical structures above, below, or at grade from trespassers and malicious mischief.

E. The Contractor, or subcontracted Security Firm(s) if utilized, shall coordinate with local law enforcement and with SANBAG for patrol enhancement through SANBAG's representative.

F. The Contractor shall comply with SANBAG requirements regarding the protection of the public, group tours, site visitors, and office safety.

1.4 SUBMITTALS

A. The Contractor shall submit, for acceptance by SANBAG, a written site-specific SLPP that addresses both active and passive security measures to be implemented by the Contractor for project-related Work Sites. This SLPP will be revised and resubmitted as conditions warrant and shall include at least the following:
   1. Lighting/illumination: The Contractor shall provide and maintain adequate lighting throughout each Work Site. This includes staging, laydown areas, and employee parking lots.
   2. Office Security: All Contractor office facilities shall be secured to prevent entry, and shall be provided with alarm systems.

3. Physicals barriers: The Contractor shall provide and install perimeter fencing. Access areas shall be closed and locked at the end of shift or when work is completed in the area. Temporary construction protection fencing shall be required specific to Work Site activities.
4. Project warning signage: The Contractor shall provide signs such as ”Keep Out – No Trespassing” or safety directive signs for pedestrians and/or other contractors and employees as required.

B. Should conditions change, the Contractor will be required to resubmit an updated, site-specific SLPP that reflects the changes in conditions. Any required resubmittal shall be considered within the original scope of this Contract, and shall be submitted in accordance with SANBAG accepted submittal schedule so as to not delay the performance of Work by the Contractor.

C. The Contractor shall not perform Work on the Work Site for this Contract or any work order thereunder, until SANBAG has returned the submittals marked "No Exceptions Taken." SANBAG refusal to issue permission to perform Work on the Work Site, due to the Contractor's failure to submit listed safety submittals, or due to SANBAG rejection of unacceptable submittals, shall not constitute a basis for any claim of delay, interference, disruption, or other similar types of claims.

PART 2 - PRODUCTS (NOT USED)

PART 3 - EXECUTION

3.1 SECURITY SERVICES AND EQUIPMENT

A. The on-site security personnel shall not be utilized to provide, operate, or maintain Contractor’s security at the Work Site during construction.

B. Should the Contractor desire to utilize security guards, the Contractor shall select, provide, and retain a reputable uniformed armed security guard service. Security guards assigned by the Contractor or security Subcontractor shall be assigned to only Project Work Sites for patrol and other security related activities.

C. Security guards shall be equipped with cell phones to enhance their ability to report incidents in a timely manner and allow direct contact with emergency communications dispatchers.

D. Security guards shall be provided with all necessary personnel protective equipment (PPE).

PART 4 - MEASUREMENT AND PAYMENT

A. Work of this Section is considered incidental to Work under other payment items and no separate measurement or payment will be made to the Contractor for Work of this Section.

END OF SECTION

SECTION 01 57 19
TEMPORARY ENVIRONMENTAL CONTROLS

PART 1 - GENERAL

1.1 SUMMARY

A. The Work specified in this Section consists of eliminating or minimizing air, water, and noise pollution generated by construction activities, and of complying with all legal requirements applicable to any construction generated hazardous wastes, including preparation and implementation of Storm Water Pollution Prevention Plan (SWPPP).

1.2 RELATED REQUIREMENTS

A. Section 01 35 23 - Site Safety Requirements.

B. Section 01 35 44 - Environmental Safety and Health Program.

C. Section 01 74 19 – Construction Waste Management and Disposal.

D. Section 01 50 00 - Temporary Facilities and Controls.

1.3 REGULATIONS

A. The Contractor shall comply with all pertinent regulations including the following:
   1. State of California requirements relating to Air Resources Board (CARB), Code of Regulations (CCR), Health and Safety Code (CHSC), Regional Water Quality Control Board, and the Water Resources Control Board (SWRCB).
   2. Asbestos containing materials (ACM), as defined in section 1529, "Asbestos," of the Construction Safety Orders, Title 8, of the California Code of Regulations are /suspected to be present in the structure proposed for demolition or renovation.
      a. California Health and Safety Code, Division 20, Chapter 6.5, Hazardous Waste Control.
      b. California Code of Regulations, Title 8, General Industry Safety Order 5208 Asbestos.
      c. California Code of Regulations, Title 8, Section 341
      d. California Code of Regulations, Title 22, Division 4.5
      e. Occupational Safety and Health Administration, Part 26 (amended), of Title 29 of the Code of Federal Regulations.
   3. Code of Federal Regulations (CFR), Title 40, Part 61, subpart M.
   4. National Pollution Discharge Elimination System (NPDES) General Permit for Storm Water Discharges Associated with Construction and Land Disturbance Activities, Order No. 2009-0009-DWQ, NPDES No. CAS000002 and amendments as adopted by SWRCB.
   5. The Federal Occupational Safety and Health Act (OSHA) and the California Occupational Safety and Health Act (CAL/OSHA).
   6. South Coast Air Quality Management District (SCAQMD).

1.4 SUBMITTALS

A. The Contractor shall prepare and submit the following:
   1. Certificates that materials provided comply with Standard Specifications for Public Works Construction.
   2. The Contractor's Construction Waste Management Plan (CWMP) is required within 30 calendar days after the effective date of NTP with required documents to properly govern the Contractor Generated Hazardous Wastes in accordance with Title 22, Division 4.5, CCR, and all other applicable laws and regulations. SANBAG or its designee will have the right to review, modify, and approve the CWMP, and to provide quality assurance monitoring of Contractor's implementation of this Plan.

3. SWPPP as required under the Clean Water Act and related federal and state laws and regulations is required within 30 calendar days of effective date of NTP. SANBAG or its designee will have the right to review, modify, and approve this SWPPP, and to provide quality assurance monitoring of the Contractor's implementation of this Plan.

   NOTE: Contractor shall be required to have a Qualified SWPPP (QSD) prepare this plan. Contractor shall also implement this plan and provide a Qualified SWPPP Practitioner (QSP) for the duration of this project. SANBAG will designate an Authorized Representative of the Legally Responsible Person (LRP) and will also provide a Data Submitter for uploading information into the SMARTS system.
4. The Contractor shall prepare permit applications and obtain permits not provided by SANBAG as necessary for performance of the Work under this Contract including, but not limited to
   a. Excavation dewatering and discharge of water and runoff into existing drainage systems or surface waters.
   b. Disposal of debris and soils.
   c. Disposal of track and related material.
   d. All other activities with potential to adversely affect the environment.
   e. Written permission from the property owner for right-of-entry work that requires entering private property.
   f. Submit copies of permit applications and permits to SANBAG.

PART 2 - PRODUCTS - (NOT APPLICABLE TO THIS SECTION)

PART 3 - EXECUTION

3.1 AIR POLLUTION CONTROLS

A. The Contractor shall comply with all requirements for controlling fugitive dust including specific impact mitigation measures contained in the latest version of the South Coast Air Quality Management District (SCAQMD) Rules and Regulations that include minimum procedures and techniques:
   1. Cover loads of materials, debris, and soil transported from Work Sites. Trim or remove loose material from loads before leaving the Project. Do not cause or allow emissions of fugitive dust to remain visible in atmosphere beyond the property line of the emission source.
   2. Daily or more frequently, if necessary, water down and sweep adjacent streets and sidewalks that have heavy volumes of construction vehicles carrying debris and excavated materials.
   3. Establish regular cycles and locations for cleaning trucks that haul soil from Work Site.
   4. Comply with dust control requirements identified in Section 01 50 00 - Temporary Facilities and Controls and water down Work Sites as required for suppressing dust, during handling of excavation soil or debris, or during demolition.
   5. If conveyors are used, cover all transfer points along the conveyor system that is moving soil. Minimize the drop height to the stockpile. Provide a sprinkler system that will apply water to soil before it drops to stockpile.
   6. Any adapted measures developed by SCAQMD on Best Available Control Measures (BACM) for Fugitive Dust and Rule 403 will be incorporated into the Work Site operations for Fugitive Dust Control.

B. Burning of wastes is prohibited. Remove scrap and waste material and dispose of it in accordance with laws, codes, regulations, ordinances and permits.

C. Use construction equipment designed and equipped to prevent or control air pollution in conformance with the most restrictive regulations of the EPA, state, and local authorities. Maintain evidence of such design and equipment and make it available for inspection by SANBAG or its designee.

D. Establish and maintain records of the routine maintenance program for internal combustion engine powered vehicles and equipment used on the Project. Keep records available for inspection by SANBAG or its designee.

E. During excavation, gases may be released from soil and from underground reservoirs. Gases may contain methane, other more complex hydrocarbons, or hydrogen sulfide, and may present hazards due to flammability or toxicity. Safety during construction is required by regulations of OSHA and CAL/OSHA. Although the composition, quantity, and concentration of gases that might be released are unknown, release of gases into the atmosphere may be subject to control by SCAQMD and the California Air Resources Board (CARB). SANBAG will coordinate this issue with SCAQMD and CARB and will inform the Contractor of further required actions.

F. In accordance with all regulations, perform a survey for asbestos containing materials and notify regulatory agencies including SCAQMD prior to renovation or demolition of any facility. Notify regulatory agencies prior to commencing Work on bridges or structures. Provide a copy of all notices to SANBAG.

G. Prevent or immediately remove "track-out" of material or dust onto public paved roadways. Daily or more frequently, if necessary, water down and sweep streets which have construction vehicles carrying debris and excavated materials and adjacent sidewalks to remove deposited materials.

3.2 WATER POLLUTION CONTROLS

A. SANBAG shall solely determine whether discharged stormwaters will be discharged to the storm drain system. The Contractor shall treat stormwater, including storm runoff that is pumped from excavations and other water encountered during operations; remove suspended particles, pollutants, and hydrocarbons through settling basins or hydrocarbon separators in order to comply with SANBAG direction and regulatory criteria for pollutants in water set by state and local water agencies.

B. The Contractor shall monitor storm water discharge to ensure it meets standards set by appropriate laws, codes, regulations, ordinances and permits. Retain records of measurements for inspection by SANBAG or its designee. Perform daily monitoring of stormwater discharges and record daily discharged quantities according to NPDES permit guidelines. Submit certified monthly reports not later than seven days after the end of the month.

C. The Contractor is responsible for preventing or mitigating potential chemical releases, erosions and sedimentation impacts associated with storm water runoff.

D. The Contractor shall provide copies of the approved SWPPP to its Subcontractors and shall keep a copy available onsite at the project office. The Contractor shall provide amendments to the SWPPP whenever there is a change in construction, operations, or where storm water runoff conditions which may affect the discharge of significant quantities of pollutants to surface waters, groundwater, or separate municipal storm sewer systems.

E. A SANBAG approved SWPPP does not relieve the Contractor or its Subcontractors of their responsibilities to comply with other state, county, and local governmental requirements, including those for stormwater management or non-point source runoff controls.

3.3 SOLID AND HAZARDOUS WASTE CONTROLS

A. This Section applies to the Contractor Generated Hazardous Waste.

B. The Contractor is responsible for, and shall indemnify, defend, and hold SANBAG harmless against any costs (including attorney's fees and costs), demands, claims, damages, losses, delay costs (collectively, "Claims") arising from or associated with the management, abatement, removal, remediation, clean-up, transport, reuse, recycling, storage, and disposal of any Contractor Generated Hazardous Waste, or associated with any noncompliance with the Contractor Generated Waste Management Plan.

C. In the event that the Contractor or SANBAG reasonably suspects that the Contractor has generated, released, or discharged the Contractor Generated Hazardous Waste, the Contractor is to bear all costs of sampling and monitoring tests and other investigations to determine whether said waste is Solid Waste or Hazardous Waste in accordance with all federal, state and local requirements, including, without limitation, RCRA and Title 22, CCR Chapter 30, Article II (as amended, modified, or replaced from time to time). SANBAG reserves the right (but not the obligation) to perform its own physical and chemical analyses and tests on suspected Contractor Generated Hazardous Waste. The Contractor shall furnish samples, at the Contractor's cost, as directed by SANBAG.

D. The Contractor shall be responsible for the management, abatement, removal, remediation, clean-up, transport, reuse, recycling, storage, and disposal of the Contractor Generated Hazardous Waste in accordance with laws, rules, regulations, and orders, including, without limitation, Title 22, Chapter 30 et seq., California Code of Regulations, California Health and Safety Code Section 25100 et seq., Titles 23 and 26, California Code of Regulations, and regulations of the waste disposal facility to be used. Haul routes for transporting solid or hazardous wastes are subject to the approval of local jurisdictions, or other regulatory agencies.

PART 4 - MEASUREMENT AND PAYMENT

A. The measurement and payment for mobilization, maintenance, utilization, and demobilization of required facilities, personnel, materials and equipment under this Section shall be identified and paid as a lump sum, in accordance with the Mobilization and Demobilization contract items established in the Bid Item List, unless SWPPP Best Management Practices Implementation contract item is established in the Bid Item List.

B. All other Work of this Section is considered incidental to Work under other contract items and no separate measurement or payment will be made to the Contractor for Work of this Section.

END OF SECTION

SECTION 01 60 00
PRODUCT REQUIREMENTS

PART 1 - GENERAL

1.1 SUMMARY

A. This Section includes administrative and procedural requirements relating to selection of products, materials and equipment for the Work and their delivery, storage, and handling.

1.2 RELATED REQUIREMENTS

A. Section 01 25 00 - Substitution Procedures

B. Section 01 78 36 - Warranties and Guarantees

C. Divisions 02 through 49 Sections for specific requirements relating to products and installations.

1.3 MATERIAL SAFETY DATA SHEETS

A. The Material Safety Data Sheet (MSDS) is prepared by manufacturers and suppliers of products that contain hazardous materials. Hazardous material is defined as any substance which is a physical, or health hazard, or is included in the Cal-OSHA Director's List of Hazardous Substances, or is listed in Title 22 of the California Code of Regulations, Section 12000, Chemicals Known to the State to Cause Cancer or Reproductive Toxicity (Proposition 65 Substances).

B. No hazardous materials shall be delivered, stored, or used at any work site or facility unless they are properly labeled, tagged or marked, and a copy of the MSDS has been provided to SANBAG. A copy of any updated MSDSs shall be provided to SANBAG immediately.

C. The Contractor shall also maintain a file of relevant MSDSs at the work site. MSDS files shall be kept current; new or updated MSDSs shall be added immediately and a copy provided to SANBAG.

PART 2 - PRODUCTS

2.1 PRODUCT SELECTION PROCEDURES

A. General Product Requirements: Provide products that comply with the Contract Documents, that are undamaged, and, unless otherwise indicated, that are new at time of installation.
   1. Provide products complete with accessories, trim, finish, fasteners, and other items needed for a complete functional installation and indicated use and effect.
   2. Standard Products: If available, and unless custom products or nonstandard options are specified, provide standard products of types that have been produced and used successfully in similar situations on other projects.
   3. SANBAG reserves the right to limit selection to products with warranties not in conflict with requirements of the Contract Documents.
   4. Where products are accompanied by the term "as selected," SANBAG will make the selection.
   5. Descriptive, performance, and reference standard requirements in the Specifications establish "salient characteristics" of products.

6. Or Equivalent: Where products are specified by name and accompanied by the term "or equivalent" or "or approved equivalent" or "or approved," comply with provisions in Section 01 33 00 - Submittal Procedures to obtain approval for use of an unnamed product.

B. Product Selection Procedures:
   1. Product: Where the Specifications name a single product and manufacturer, provide the named product that complies with requirements. Where the Specifications name a single manufacturer or source, provide a product by the named manufacturer or source that complies with requirements.
   2. Where the Specifications include a list of names of both products and manufacturers, provide one of the products listed that complies with requirements. Where the Specifications include a list of manufacturers' names, provide a product by one of the manufacturers listed that complies with requirements.
   3. Basis of Design Product: Where the Specifications name a product and include a list of manufacturers, provide the specified product or a comparable product by one of the other named manufacturers. The Plans and Specifications indicate sizes, profiles, dimensions, and other characteristics that are based on the product named. Comply with provisions in Section 01 25 00 - Substitution Procedures for consideration of an unnamed product by the other named manufacturers.
   4. Visual Matching Specification: Where the Specifications require matching an established sample, select a product that complies with requirements and matches SANBAG's sample. SANBAG's decision will be final on whether a proposed product matches.
   5. If no product available within the specified category matches and complies with other specified requirements, comply with provisions in Section 01 25 00 - Substitution Procedures for proposal of a product.

2.2 LISTING OF ELECTRICAL EQUIPMENT

A. It is the Contractor's responsibility to ensure that electrical equipment, machinery control panels and electrical components, and field installed devices and components will meet the all applicable codes and regulations of both the local authority and the State of California, for "listing" of electrical equipment by an accredited laboratory. Applicable provisions of all Underwriter's Laboratory standards, as incorporated under the laws within the State of California, shall apply to the work of this project, except as modified herein, and are hereby made a part of the Specifications to the extent required.

B. The UL listing is acceptable; however, other certifications must be checked for acceptance under the applicable laws and regulations of the State of California and approved by SANBAG prior to equipment purchase. Custom built control panels and systems, wherein listing has not been established prior to manufacture, will be accepted only if they are built under the UL self certification labeling procedures. Compliance with, the costs of, and any scheduling impacts associated with the laws, codes and regulations of the state and local jurisdictions are the responsibility of the Contractor and its suppliers.

PART 3 - EXECUTION

3.1 PRODUCT DELIVERY, UNLOADING, STORAGE, AND HANDLING

A. The Contractor shall, at its own expense, deliver, unload, store, handle, and be responsible for all materials, whether furnished by SANBAG or by the Contractor. All SANBAG furnished material, whether unloaded by SANBAG or by the Contractor, shall be moved by the Contractor, at its expense, from the point where it is delivered by SANBAG to the Work Site.

B. Deliver: Unload, store, and handle products using means and methods that will prevent damage, deterioration, and loss, including theft. Comply with manufacturer's written instructions. The unloading, storing and hauling of all SANBAG's or the Contractor's material shall be considered as incidental to Contract pricing.

C. Delivery and Handling:
   1. Schedule delivery to minimize long-term storage at the Work Site, and to prevent overcrowding of construction spaces.
   2. Coordinate delivery with installation times to ensure minimum holding time for items that are flammable, hazardous, easily damaged, or sensitive to deterioration, theft, and other losses.
   3. Deliver products to the Work Site in an undamaged condition in the manufacturer's original, sealed container or other packaging system, complete with labels and instructions for handling, storing, unpacking, protecting, and installing.
   4. Inspect products on delivery to ensure compliance with the Contract Documents and to ensure that products are undamaged and properly protected.
   5. Track materials shall be handled and stored in accordance with the SCRRA Track Maintenance and Engineering Instructions.

D. Storage:
   1. Store products to allow for inspection and measurement of quantity or counting of units. Store products with seals and labels intact and legible.
   2. Store materials in a manner that will not endanger any structures. Materials shall not be placed nor stored within 20 feet of the centerline of any active railroad track.
   3. Comply with the product manufacturer's written instructions regarding temperature, humidity, ventilation, and weather-protection requirements for storage.
   4. Store loose granular materials on solid flat surfaces in a well drained area. Prevent mixing with foreign matter.
   5. Store cementitious products and materials on elevated platforms.
   6. Store foam plastic away from exposure to sunlight, except to the extent necessary for a period of installation and concealment.
   7. Protect stored products from damage and liquids from freezing.
   8. Building materials will be stored in a protected environment safe from sun, rain, and excessive dust. Damaged or excessively dirty materials will be rejected.
   9. Electrical and mechanical equipment shall be maintained in accordance with the manufacturer's operation and maintenance instructions until the Contractor is relieved of the responsibility by SANBAG.
   10. When permission to do so is given in writing by SANBAG, the Contractor may store materials and erect temporary buildings on SANBAG property, provided such property is not required for SANBAG's use or is not under lease to other parties.

PART 4 - MEASUREMENT AND PAYMENT

A. Work of this Section is considered incidental to Work under other payment items and no separate measurement or payment will be made to the Contractor for Work of this Section.

END OF SECTION

This page intentionally left blank.

SECTION 01 74 19
CONSTRUCTION WASTE MANAGEMENT AND DISPOSAL

PART 1 - GENERAL

1.1 SUMMARY

A. This Section includes administrative and procedural requirements for salvaging nonhazardous demolition and construction waste, recycling nonhazardous demolition waste and disposing of nonhazardous demolition and construction waste.

B. The Owner has established that this Project shall include proactive measures for waste management participation by all parties to the contract.

C. The purpose of this program is to ensure that during the course of the Project all diligent means are employed to pursue practical and economically feasible waste management and recycling options.

A. Upon award, Contractor and Subcontractors shall be required to furnish documentation from suppliers or manufacturers regarding waste management and recycling options for those products and procedures furnished. Waste disposal to landfills shall be minimized.

1.2 RELATED REQUIREMENTS

A. Section 01 57 19 - Temporary Environmental Controls.

B. Divisions 02 through 49 Sections for specific requirements relating to disposition of waste resulting from the Work including but not limited to disposition of waste resulting from site clearing and removal of above and below-grade improvements.

1.3 DEFINITIONS

A. Construction Waste: Building and site improvement materials and other solid waste resulting from construction, remodeling, renovation, or repair operations. Construction waste includes packaging.

B. Construction Waste Management Plan (CWMP): A Project-specific plan for the collection, transportation, and disposal of the waste generated at the construction site.

C. Demolition Waste: Building and site improvement materials resulting from demolition or selective demolition operations.

D. Disposal: Removal off-site of demolition and construction waste and subsequent sale, recycling, reuse, or deposit in landfill or incinerator acceptable to authorities having jurisdiction.

E. Hazardous waste: Any material or byproduct of construction that is regulated by the Environmental Protection Agency and that may not be disposed in any landfill or other waste end-source without adherence to applicable laws.

F. Recycle: Recovery of demolition or construction waste for subsequent processing in preparation for reuse.

G. Salvage: Recovery of demolition or construction waste and subsequent sale or reuse in another facility.

H. Salvage and Reuse: Recovery of demolition or construction waste and subsequent incorporation into the Work.

I. Trash: Any product or material unable to be returned, reused, recycled or salvaged.

J. Waste: Any material that has reached the end of its intended use. Waste includes salvageable, returnable, recyclable and reusable construction materials that would otherwise be discarded or destroyed.

1.4 PERFORMANCE REQUIREMENTS

A. Facilitate recycling and salvage of materials to achieve maximum rates for salvage/recycling by weight of total non-hazardous solid waste generated. Practice efficient waste management in the use of materials in the course of the Work. Use all reasonable means to divert construction and demolition waste from landfills and incinerators.
   1. CWMP Goal: Develop plan that results in end-of-Project rates for salvage/recycling of a minimum of 75 percent by weight of total waste generated by the Work.

B. Packaging: Regardless of salvage/recycle goal indicated above, salvage or recycle 100 percent of the following uncontaminated packaging materials, including paper, cardboard, plastic, polystyrene packaging and wood crates.

1.5 SUBMITTALS

A. Within 30 calendar days of NTP, submit a CWMP, according to ASTM E 1609, the requirements of the jurisdiction having authority, and requirements in this Section. Distinguish between demolition and construction waste. Indicate quantities by weight or volume, but use the same units of measure throughout the waste management plan. List each type of waste and whether it will be salvaged, recycled, or disposed of in a landfill or incinerator. Include points of waste generation, total quantity of each type of waste, quantity for each means of recovery, and handling and transportation procedures.

B. Project Information:
   1. Waste Reduction Progress Reports: Concurrent with each Application for Payment, submit copies of report. Include separate report for demolition and construction waste. Include the following information:
      a. Material category.
      b. Total quantity of waste in tons.
   2. Quantity of waste salvaged, both estimated and actual in tons.
      a. Quantity of waste recycled, both estimated and actual in tons.
      b. Total quantity of waste recovered (salvaged plus recycled) in tons.
      c. Total quantity of waste recovered (salvaged plus recycled) as a percentage of total waste.
   3. Waste Reduction Calculations: Before request for Substantial Completion, submit copies of calculated end-of-Project rates for salvage, recycling, and disposal as a percentage of total waste generated by the Work.
   4. Records of Donations: Indicate receipt and acceptance of salvageable waste donated to individuals and organizations. Indicate whether organization is tax exempt.
   5. Records of Sales: Indicate receipt and acceptance of salvageable waste sold to individuals and organizations. Indicate whether organization is tax exempt.
   6. Recycling and Processing Facility Records: Indicate receipt and acceptance of waste by landfills and Waste to Energy facilities licensed to accept them. Include manifests, weight tickets, receipts, and invoices.
   7. Landfill and Waste to Energy Disposal Records: Indicate receipt and acceptance of waste by landfills and Waste to Energy or facilities licensed to accept them. Include manifests, weight tickets, receipts, and invoices.

C. LEED Information:
   1. MR 2: Construction Waste Management:
      a. Construction Waste Management Plan.

b. Calculations indicating amount of construction waste in tons and the amount of construction waste recycled.

1.6 QUALITY ASSURANCE

A. Waste Management Coordinator Qualifications: Experienced firm, with record of successful waste management coordination of projects with similar requirements, that employs a LEED Accredited Professional, certified by USGBC as Contractor's Waste Management Coordinator (CWMC).

A. Refrigerant Recovery Technician Qualifications: Certified by EPA-approved certification program.

B. Regulatory Requirements: Comply with hauling and disposal regulations of authorities having jurisdiction.

C. Waste Management Conference: Project Manager shall conduct conference at Project site to review methods and procedures related to waste management including but not limited to, the following:
   1. Review and discuss Waste Management Plan.
   2. Review requirements for documenting quantities of each type of waste and its disposition.
   3. Review and finalize procedures for materials separation and verify availability of containers and bins needed to avoid delays.
   4. Review procedures for periodic waste collection and transportation to recycling and disposal facilities.
   5. Review waste management requirements for each trade.

1.7 CONSTRUCTION WASTE MANAGEMENT PLAN

A. General: Develop plan consisting of waste identification, waste reduction work plan, and cost/revenue analysis. Include separate sections in plan for construction waste. Indicate quantities by weight or volume, but use same units of measure throughout waste management plan.

B. Waste Identification: Indicate anticipated types and quantities of construction waste generated by the Work. Include estimated quantities and assumptions for estimates.

C. Waste Reduction Work Plan: List each type of waste and whether it will be salvaged, recycled, or disposed in landfill or Waste to Energy facilities. Include points of waste generation, total quantity of each type of waste, quantity for each means of recovery, and handling and transportation procedures.
   1. Salvaged Materials for Reuse: For materials that will be salvaged and reused in this Project, describe methods for preparing salvaged materials before incorporation into the Work.
   2. Salvaged Materials for Sale: For materials that will be sold to individuals and organizations, include list of their names, addresses, and telephone number.
   3. Salvaged Materials for Donation: For materials that will be donated to individuals and organizations, include list of their names, addresses, and telephone numbers.
   4. Recycled Materials: Assign recycling to recycling subcontractor, or list local receivers and processors, and type of recycled materials each will accept. Include names, addresses, and telephone numbers.
   5. Disposed Materials: Indicate how and where materials will be disposed of. Include name, address, and telephone number of each landfill and Waste to Energy facility. List hazardous material waste and disposal separately.
   6. Handling and Transportation Procedures: Include method that will be used for separating recyclable waste including sizes of containers, container labeling, and designated location on Project site where materials separation will be located.

D. Waste Management Plan shall include locations of sorting and waste storage facilities on Site Plan of project.

PART 2 - PRODUCTS - (NOT APPLICABLE TO THIS SECTION)

PART 3 - EXECUTION

3.1 PLAN IMPLEMENTATION

A. General: Implement waste management plan as approved by SANBAG. Provide handling, containers, storage, signage, transportation, and other items as required to implement waste management plan during the entire duration of the Contract. Comply with the following procedures:
   1. Define specific areas to facilitate separation of materials for recycling, salvage, reuse or return.
   2. Separate construction waste by type to the maximum extent practical.
   3. Recycle and waste bin areas are to be maintained in an orderly manner and clearly marked to avoid contamination of materials. Inspect containers and bins weekly for contamination and remove contaminated materials if found.
   4. Do not mix recyclable materials.
   5. Stockpile processed materials on site without intermixing with other materials. Place, grade, and shape stockpiles to drain surface water. Cover to prevent windblown dust.
   6. Store materials away from construction area. Do not store within drip line of remaining trees.
   7. Store components off the ground and protect from weather.
   8. Remove construction waste off-site and transport to appropriate receiver or processor.
   9. Provide handling, containers, storage, signage, transportation, and other items as required to implement the CWMP for the entire duration of the Contract.

B. Waste Management Coordinator: Designate a CWMC to be responsible for implementing, monitoring, and reporting status of the CWMP.

C. Training: Train workers, subcontractors, and suppliers on proper waste management procedures, as appropriate for the Work occurring at Project site.
   1. Distribute waste management plan to everyone concerned within seven days of submittal return.
   2. Distribute waste management plan to entities when they first begin work on site. Review plan procedures and locations established for salvage, recycling, and disposal.

D. Site Access and Temporary Controls: Conduct waste management operations to ensure minimum interference with roads, streets, walks, walkways, and other adjacent occupied and used facilities.
   1. Designate and label specific areas on Project site necessary for separating materials that are to salvaged, recycled, reused, donated, and sold.
   2. Comply with environmental controls specified in Division 01 Section 01 50 00 Temporary Facilities, Construction Controls and Facilities.

E. Hazardous Wastes: Store in secure areas and comply with the following:
   1. Hazardous wastes shall be separated, stored and disposed of in accordance with local and EPA regulations and additional criteria listed below:
      a. Building products manufactured with PVC or containing chlorinated compounds shall not be incinerated.
      b. Disposal of fluorescent tubes and ballasts to open containers is not permitted.
      c. Disposal of building elements containing mercury to open containers is not permitted.

2. Unused fertilizers shall not be co-mingled with construction waste.

F. Site Access and Temporary Controls: Conduct waste management operations to ensure minimum interference with roads, streets, walks, walkways, and other adjacent occupied and used facilities. Designate specific areas on the Work Site necessary for separating materials that are to be salvaged, recycled, reused, donated, and sold.

G. "Waste Reduction Progress Reports: Submit each month as part of the Contractor's Application For Payment.
   1. Materials identified in the Report shall be reported by weight.
   2. Where weight is not applicable, Contractor shall report materials by units applicable to material recipient.
   3. Procure receipts or other validation of waste management procedures and include them as part of the submittal.

3.2 SALVAGING DEMOLITION WASTE

A. Salvaged items for reuse in the Work: Salvage designated items for reuse and handle as follows:
   1. Clean salvaged items.
   2. Pack or crate items after cleaning.
   3. Identify contents of containers.
   4. Store items in a secured area until reinstallation.
   5. Protect items from damage during transport and storage.

B. Salvaged items for sale and donation: None

C. Salvaged items for SANBAG use: As directed by SANBAG.

3.3 RECYCLING DEMOLITION AND CONSTRUCTION WASTE, GENERAL

A. General: Recycle paper and beverage containers used by on-site workers.

B. Recycling Incentives: Revenues, savings, rebates, tax credits, and other incentives received for recycling waste materials shall accrue to the benefit of SANBAG.

C. Preparation of Waste: Prepare and maintain recyclable waste materials according to recycling or reuse facility requirements. Maintain materials free of dirt, adhesives, solvents, petroleum contamination, and other substances deleterious to the recycling process.

D. Procedures: Separate recyclable waste from other waste materials, trash, and debris. Separate recyclable waste by type at the Work Site to the maximum extent practical, according to the approved construction waste management plan.
   1. Provide appropriately marked containers or bins for controlling recyclable waste until removed from the Work Site. Include a list of acceptable and unacceptable materials at each container and bin.
      a. Inspect containers and bins for contamination and remove contaminated materials (if found).
   2. Stockpile processed materials on site without intermixing with other materials. Place, grade, and shape stockpiles to drain surface water. Cover to prevent windblown dust.
   3. Stockpile materials away from the construction area. Do not store within the drip line of remaining trees.
   4. Store components off the ground, and protect them from the weather.
   5. Remove recyclable waste from SANBAG property and transport to a recycling receiver or processor.

E. Asphaltic Concrete Paving: Grind asphalt to maximum 4" particle size.

F. Concrete: Remove reinforcement and other metals from concrete and sort with other metals. Pulverize concrete to a maximum 4" particle size.

G. Wood Materials: Sort and stack materials according to size, type, and length. Separate lumber, engineered wood products, panel products, and treated wood materials.

H. Metals: Separate metals by type.
   1. Reinforcing Steel: Separate from concrete.
   2. Structural Steel: Stack materials according to size, type, and length.
   3. Miscellaneous Metals: Remove and dispose of bolts, nuts, washers, and other rough hardware.

I. Asphalt Shingle Roofing: Separate organic and glass-fibers shingles and felts. Remove and dispose of nails, staples, and accessories.

J. Gypsum Board: Stack large clean pieces on wood pallets or in container and store in a dry location. Remove edge trim and sort with other metals. Remove and dispose of screws and fasteners.

K. Acoustical Ceiling Tile: Stack large clean pieces on wood pallets or in container and store in a dry location.
   1. Separate metal suspension system members including trim and other framing and sort with other metals.

L. Carpet: Roll large pieces tightly after removing debris, trash, adhesive, and tack strips. Store clean dry carpet in a closed container or trailer.

M. Piping and Conduit: Reduce materials to straight lengths and store by type and size. Separate supports, hangers, valves, sprinklers, and other components by type and size.

3.4 RECYCLING AND CONSTRUCTION WASTE

A. Packaging:
   1. Cardboard and Boxes: Break down packaging to flat sheets. Bundle and store in a dry location.
   2. Polystyrene Packaging: Separate and bag materials.
   3. Pallets: Require deliveries as much as possible using pallets to remove from project site. For pallets that remain onsite, break down pallets into component wood pieces and comply with requirements for recycling wood.
   4. Crates: Breakdown crates into component wood pieces and comply with requirements for recycling wood.

B. Wood Materials:
   1. Clean Cut-offs of Lumber: Grind or chip into small pieces.
   2. Clean Sawdust: Bag sawdust that does not contain paint or treated wood.

C. Gypsum Board: Stack large clean pieces on wood pallets or in container and store in a dry location.
   1. Clean Gypsum Board: Grind scraps of clean gypsum board using small mobile chipper or hammer mill. Screen out paper after grinding.

3.5 DISPOSAL OF WASTE

A. General: Except for items or materials to be salvaged, recycled, or otherwise reused, remove waste materials from the Work Site and legally dispose of them in a landfill or in another manner acceptable to authorities having jurisdiction.
   1. Except as otherwise specified, do not allow waste materials that are to be disposed of to accumulate on site.
   2. Remove and transport debris in a manner that will prevent spillage on adjacent surfaces and areas.

B. Burning: Do not burn waste materials.

C. Disposal: Remove waste materials offsite and legally dispose of them.

PART 4 - MEASUREMENT AND PAYMENT

A. Work of this Section is considered incidental to Work under other payment items and no separate measurement or payment will be made to the Contractor for Work of this Section.

END OF SECTION

SECTION 01 71 23
FIELD ENGINEERING

PART 1 - GENERAL

1.1 SUMMARY

A. This Section describes the Contractor's and SANBAG's respective responsibilities for field engineering services, including general procedural requirements for field engineering and surveying for the Work.
   1. Field Engineering includes but is not limited to establishing and maintaining baselines, design lines, grades and field control points as required for construction layout survey. The Work of this Section also includes field survey of existing and new track and bridge alignments and grade to verify final layout, point of switch stations, alignment, and grade for new turnouts, and other structures indicated on the Plans.
   2. SANBAG will have its surveyor furnish construction control and survey lines and grades as requested by the contractor and as determined by SANBAG's Resident Engineer to be reasonable and necessary to complete the Project.
   3. The Contractor shall provide grade checker personnel on site for all earthwork, grading, and other work activities to set working grades for their equipment and devises used to perform the Work. The Contractor may also elect to set supplemental working stakes at his sole discretion and own expense. SANBAG's surveyor may or may not verify any supplemental staking.

1.2 RELATED REQUIREMENTS

A. Section 01 77 19 – Project Closeout

B. Section 01 78 39 – Project Record Documents

1.3 SUBMITTALS

A. Request for Construction Staking: Use the form provided at the end of this Section of the Specifications to request SANBAG provide staking.

1.4 QUALITY CONTROL

A. If during the course of performing the Work, the Contractor believes there is an apparent discrepancy with the line and grade controls established by SANBAG, the Contractor shall notify SANBAG prior to proceeding with the Contractor's work. This notification shall be timely to avoid impacting scheduled work progress.

B. The Contractor's project schedule shall allow sufficient time, but no less than two working days, for SANBAG to complete the requested survey work tasks.

PART 2 - PRODUCTS (NOT APPLICABLE TO THIS SECTION)

PART 3 - EXECUTION

3.1 REQUESTS AND NOTIFICATIONS

A. Refer to subsection 1.03 A. for requests for construction staking, using appropriate form and submission procedure.

B. The Contractor's notice must allow reasonable time for SANBAG to schedule, prepare, and perform the survey work in response to the Contractor's notice. At minimum, two working days of advanced notice is required before survey services can be rendered. Any requested notice received by SANBAG in less than two working days will result in rejection of the Contractor's request or notice without action taken.

C. When preparing the written request, the Contractor shall allow sufficient time, but no less than two working days, for the Survey crew to complete the requested survey work. It is understood that certain staking requests may require more than the two day minimum advanced notice.

D. If SANBAG determines that the area or facility subject to staking is not satisfactorily prepared, SANBAG will immediately return to Contractor the request for staking. A new request for staking may be resubmitted when the area or facility has been properly prepared.

3.2 SURVEY REFERENCE POINTS

A. The Contractor is responsible to locate and protect survey controls, survey monuments and reference points and preserve permanent reference points during construction.

B. The Contractor shall report to SANBAG the loss or destruction of any reference points or relocation required because of changes in grades or other reasons.

3.3 FIELD ENGINEERING (SANBAG PERFORMED)

A. Identification: SANBAG will identify existing benchmarks, control points, and property corners. Control datum for the survey shall be indicated on the Plans.

B. Benchmarks: Establish and maintain a minimum of two permanent benchmarks on the Work Site, referenced to data established by survey control points. Comply with authorities having jurisdiction for the type and size of benchmark.

C. Where the actual location or elevation of layout points cannot be marked, provide temporary reference points sufficient to locate the Work.

D. Surveyor shall establish benchmarks and control points to set lines and levels at each story of construction and elsewhere as needed to locate each element of the Project.

E. Staking will be placed at industry standard frequency for type of staking required (typically 50 feet along tangents and 25 feet along curves). A corresponding cut or fill to finished grade (or flow-line) will be indicated on a grade sheet in connection with the laying out of any portion of the Work.

F. Provide surveying for utilities up to the point of building connection as shown in the Plans. Includes centerline offset, angle points, centerline of structures (manholes, catch basins, etc.), and inverts.

G. Provide surveying for grading, baseline offsets, cut fills, grade breaks, hinge points and other points requested by Contractor.

H. Provide surveying for substructures and underground work located outside building footprint.

I. Record Log: Maintain a log of layout control work. Record any deviations from required lines and levels. Include beginning and ending dates and times of surveys, weather conditions, name and duty of each survey party member, and types of instruments and tapes used. Make the log available for reference to the Contractor.

J. The basis for dimensioning railroad track is the centerline between the rails and elevation of the top surface of the rail unless noted otherwise in the Plans, the Specifications, or as directed by SANBAG. On curved track with super-elevation, the elevation specified is that of the low rail (inside of curve) unless noted otherwise in the Plans, the Specifications, or as directed by SANBAG. Indicate PC, PT, PS, Point of Switch, Point of Frog and other special features indicated on the Contractor's request.

3.4 CONSTRUCTION LAYOUT (CONTRACTOR RESPONSIBILITY)

A. The Contractor shall dig all holes as necessary for setting line and grade stakes.

B. Before proceeding with the Work, the Contractor shall verify that layout information provided by SANBAG is consistent with that shown in the Plans. If discrepancies are encountered, the Contractor shall notify SANBAG immediately.

C. The Contractor shall provide a grade checker to set working grades for their equipment and other devices.

D. The Contractor shall become familiar with the location of existing permanent benchmarks, control points, and similar reference points before beginning the Work and preserve and protect permanent benchmarks and control points during construction operations.

E. The Contractor shall not change or relocate existing benchmarks or control points without prior written approval of SANBAG. Report the need to relocate permanent benchmarks or control points to SANBAG before proceeding.

F. The Contractor shall report lost or destroyed permanent benchmarks or control points immediately.

G. The Contractor shall not disturb any survey monuments that control the location of subdivisions, tracts, boundaries, roads, streets, or highways, or provide horizontal and/or vertical survey control without the written consent of SANBAG.

H. The Contractor shall bear the expense of replacing any monuments that may be disturbed without permission. Replacement shall be performed only under the supervision of SANBAG and the direction of a Licensed Land Surveyor or a Registered Civil Engineer authorized to practice land surveying in California.

I. Marks or stakes are to be used within a reasonable amount of time to prevent exposure to deterioration or destruction. Take proper precautions to prevent disturbance or damage to marks or stakes. In case such marks or stakes are damaged or destroyed they will be replaced at SANBAG discretion. Remarking, re-staking, or rechecking of survey will be charged to the Contractor and deducted from the next progress payment.

J. The Contractor shall remove temporary reference points when no longer needed and restore marked construction to its original condition.

PART 4 - MEASUREMENT AND PAYMENT

A. Work in this Section is considered incidental to Work under other payment items and no separate measurement or payment will be made to the Contractor for Work of this Section.

END OF TEXT (SEE CONSTRUCTION STAKING FORM ON NEXT PAGE)

PARSONS BRINCKERHOFF

REQUEST FOR CONSTRUCTION STAKING

PROJECT: Downtown San Bernardino Passenger Rail Project

FILE : 174906

TO BE FILLED IN BY: CONTRACTOR

PRIORITY	TYPE OF STAKING	STAKES ARE ORIG.	STAKES ARE RESET	LOCATION LINE, STATION TO STATION, LANE, SIDE, ETC.	DATE AREA WILL BE READY FOR STAKES	DATE STAKES WILL BE USED	RESIDENT ENGR. DATE & TIME AREA READY FOR STAKES CHECKED BY	PARTY CHIEF DATE STAKES SET - ‡ BEGAN COMPLETED	IF RESET, TOTAL SURVEY MANHOURS

If no priority number is given, staking will be done in order listed and/or received.

‡ If staking is not completed on date begun, add date completed.

REQUESTED BY: _____ DATE: _____
(CONTRACTOR'S REP)

PARTY CHIEF: _____

REC'D BY: _____ DATE: _____ TIME: _____
(RESIDENT ENGINEER)

STAKES ARE ORIGINAL – VERIFIED BY: _____

COMMENTS _____

RESTAKING CHARGES

COMMENTS: _____

_____ Manhours @ $ _____/hr. = $ _____

Charge restaking costs to Contractor: Yes _____ No _____

RESIDENT ENGINEER : _____
(SIGNATURE)

T:\174906A-EasternMaintFacility\SUR\FieldNotes\174906 REQUEST CONST STAKING.DOC

SECTION 01 77 00
SUBSTANTIAL COMPLETION

PART 1 - GENERAL

1.1 SUMMARY

A. This Section addresses administrative and procedural requirements for establishing Substantial Completion.

1.2 RELATED REQUIREMENTS

A. Section 01 23 50 - Time Related Overhead

B. Section 01 31 99 - Contract Time

C. Section 01 77 19 - Project Closeout

D. Section 01 78 23 - Operation and Maintenance Data

E. Section 01 78 36 - Warranties and Guarantees

F. Section 01 78 39 - Project Record Documents

1.3 SUBSTANTIAL COMPLETION SUBMITTALS

A. Submit the following a minimum of 14 days prior to requesting inspection for determining the Date of Substantial Completion:
   1. Certificates of Release: Obtain and submit releases from authorities having jurisdiction, all of which would grant unrestricted use of the Work and access to services and utilities. Include occupancy permits, operating certificates, and similar releases.
   2. Submit closeout submittals specified in other Specifications Sections, including Project Record Documents, all material testing and special inspection results, operation and maintenance manuals, final completion construction photographic documentation, damage or settlement surveys, property surveys, and similar final record information, warranties, workmanship bonds, maintenance service agreements, final certifications, and similar documents.
   3. Submit maintenance material submittals, specified in individual sections of these Specifications, including tools, spare parts, extra materials, and similar items, to be delivered to the location designated by SANBAG.
   4. Submit requirements as indicated in Section 01 91 13 General Commissioning Requirements.

1.4 SUBSTANTIAL COMPLETION PROCEDURES

A. The Contractor shall complete the following prior to requesting inspection for determining the Date of Substantial Completion:
   1. Provide a Final As-Built Schedule that is approved by SANBAG.
   2. Advise SANBAG of pending insurance changeover requirements.
   3. Make the final changeover of permanent locks and deliver keys to SANBAG. Advise SANBAG of the changeover in security provisions.
   4. Complete the start-up and testing of systems and equipment.
   5. Perform preventive maintenance on equipment used prior to Substantial Completion.
   6. Instruct SANBAG's personnel in the operation, adjustment, and maintenance of products, equipment, and systems.
   7. Advise SANBAG of the changeover in utilities.

8. Terminate and remove temporary facilities from the Work Site, along with mockups, construction tools, and similar elements.
9. Complete final cleaning requirements, including areas adjacent to the Work Site such as streets, curbs, gutters, swales and other drainage facilities.
10. Touch up and otherwise repair and restore marred exposed finishes to eliminate visual defects.
11. Deliver tools, spare parts, extra materials, and similar items to the location designated by SANBAG. Label with manufacturer's name and model number where applicable.

B. The Contractor shall submit a written request for inspection to determine Substantial Completion. On receipt of such request, SANBAG will either proceed with the inspection or notify the Contractor of unfulfilled requirements. SANBAG will prepare the Certificate of Substantial Completion after inspection, or will notify the Contractor of outstanding items that must be completed or corrected before the certificate will be issued.

C. The Date of Substantial Completion is the date certified by SANBAG when the Work is sufficiently complete, in accordance with the Contract Documents. At any time SANBAG may occupy or use the Work, or a designated part or portion thereof, for the use for which it is intended. SANBAG's possession or use shall not be deemed an acceptance of any Work under the Contract.

1.5 BENEFICIAL OCCUPANCY

A. SANBAG shall have the right to take beneficial occupancy of any portion of the Work that is not otherwise complete. SANBAG mat at any time notify the Contractor in writing of its intention to take such beneficial occupancy.

B. At the time of taking beneficial occupancy, the Contractor and SANBAG shall make an inspection of that portion of the Work to determine status of completion and shall prepare a list of work items remaining to be completed.

C. During beneficial occupancy, SANBAG shall allow the Contractor reasonable access to complete or correct the remaining work items and to otherwise complete the Work. However, a failure by SANBAG to list any remaining work item shall not relieve the Contractor of responsibility for complying with all terms of the Contract.

D. While SANBAG is in possession or early use of premises, the Contractor shall be relieved of responsibility for maintenance, loss, or damage to only that portion of work for which SANBAG has taken beneficial occupancy other than that resulting from Contractor's act or omission, negligence, willful misconduct, or breach of warranty. If such possession or early use by SANBAG unreasonably delays progress of the Work or causes additional expense to the Contractor, an adjustment may be made in accordance with the Contract Documents. SANBAG's Possession or Early Use of Premises shall not be deemed an acceptance of any work under the Contract.

PART 2 - PRODUCTS

2.1 SPARE PARTS AND MAINTENANCE MATERIALS

A. Provide products, spare parts, maintenance and extra materials in quantities specified in Section 01 78 23 - Operation and Maintenance Data and individual Specification Sections.

PART 3 - EXECUTION

3.1 FINAL CLEANING

A. General: Perform final cleaning. Conduct cleaning and waste-removal operations to comply with local laws and ordinances and federal and local environmental and antipollution regulations.

B. Cleaning Procedures: Complete the following cleaning operations before requesting inspection for Substantial Completion:
   1. Clean the Work Site, yard, and grounds in areas disturbed by construction activities, including landscaped areas, making them clear of rubbish, waste material, litter, and other foreign substances.
   2. Clean paved areas with street sweeper and water truck. Remove petrochemical spills, stains, and other foreign deposits.
   3. Rake grounds that are neither planted nor paved to a smooth, even-textured surface.
   4. Clean exposed exterior and interior hard-surfaced finishes to a dirt-free condition, free of stains, films, and similar foreign substances. Avoid disturbing natural weathering of exterior surfaces. Restore reflective surfaces to their original condition.
   5. Remove debris and surface dust from limited-access spaces, including roofs, plenums, shafts, trenches, equipment vaults, manholes, attics, and similar spaces.
   6. Sweep concrete floors broom-clean.
   7. Vacuum carpet and similar soft surfaces, removing debris and excess nap; clean according to the manufacturer's recommendations if visible soil or stains remain.
   8. Clean transparent materials, including mirrors and glass in doors and windows. Remove glazing compounds and other noticeable, vision-obscuring materials. Polish mirrors and glass, taking care not to scratch surfaces.
   9. Remove labels that are not permanent.
   10. Wipe surfaces of mechanical and electrical equipment, elevator equipment, and similar equipment. Remove excess lubrication, paint and mortar droppings, and other foreign substances.
   11. Clean plumbing fixtures to a sanitary condition, free of stains, including stains resulting from water exposure.
   12. Replace disposable air filters and clean permanent air filters. Clean exposed surfaces of diffusers, registers, and grills.
   13. Clean ducts, blowers, and coils if units were operated without filters during construction, or if they display contamination with particulate matter on inspection.
   14. Clean light fixtures, lamps, globes, and reflectors to function with full efficiency.
   15. Wash and wipe clean all appurtenances and exposed finished surfaces associated with passenger platform areas, walkways and approaches, including railings and fences.

3.2 REPAIR OF THE WORK

A. Complete repair and restoration operations before requesting inspection for Substantial Completion.

B. Repair or remove and replace defective construction. Repairing includes replacing defective parts, refinishing damaged surfaces, touching up with matching materials, and properly adjusting operating equipment. Where damaged or worn items cannot be repaired or restored, provide replacements. Remove and replace operating components that cannot be repaired. Restore damaged construction and permanent facilities used during construction to their specified condition.

C. Remove and replace chipped, scratched, and broken glass, reflective surfaces, and other damaged transparent materials.

D. Touch up and otherwise repair and restore marred or exposed finishes and surfaces. Replace finishes and surfaces that that already show evidence of repair or restoration.

E. Do not paint over "UL" and other required labels and identification, including mechanical and electrical nameplates. Remove paint applied to required labels and identification.

F. Replace parts subject to operating conditions during construction that may impede operation or reduce longevity.

G. Replace burned-out bulbs, bulbs noticeably dimmed by hours of use, and defective and noisy starters in fluorescent and mercury vapor fixtures to comply with requirements for new fixtures.

PART 4 - MEASUREMENT AND PAYMENT

A. Work of this Section is considered incidental to Work under other payment items and no separate measurement or payment will be made to the Contractor for Work of this Section.

END OF SECTION

SECTION 01 77 19
PROJECT CLOSEOUT

PART 1 - GENERAL

1.1 SUMMARY

A. This Section specifies procedures and requirements for close out, including but not limited to final submittals, final acceptance, all required financial and legal documentation, and release of final payment to the Contractor.

1.2 RELATED REQUIREMENTS

A. Section 01 77 00 - Substantial Completion.

B. Section 01 78 36 - Warranties and Guarantees.

C. Section 01 78 39 - Project Record Documents.

1.3 FINAL COMPLETION SUBMITTALS

A. Submit the following a minimum of 14 days prior to requesting inspection for determining the Date of Final Completion and Acceptance:
   1. Certificate of Insurance: Submit evidence of final, continuing insurance coverage complying with Contract insurance requirements.
   2. Consent of the Surety to Final Payment
   3. All required Labor Compliance documents.
   4. Financial:
      a. Final liquidated damages settlement statement, if applicable.
      b. Application for Final Payment shall include the following documentation:
         1) Lien Releases from all Subcontractors, Suppliers and other vendors that have filed preliminary notice of liens.
         2) Certificate – "No Claims" all Subcontractors, Suppliers and other vendors that have filed preliminary notice of liens.
         3) Certificate from Contractor that all– Warranties and Guarantees are in Effect.
   5. Construction:
      a. Provide documentation of completed Punchlist items.
      b. Provide documentation of permit sign-off by third party agencies, as required and provide Certificates of Release from jurisdictional authorities.
      c. Final meter readings for utilities, a measured record of stored fuel, and similar data as of the date of Substantial Completion (or when SANBAG took possession of and assumed responsibility for corresponding elements of Work), if applicable.
      d. Certificate of Insurance: For continuing coverage if specified in Contract Documents.

1.4 ACCEPTANCE

A. SANBAG shall determine when the Work is fully completed and acceptable for purposes of contract close out. The Contractor shall submit to SANBAG a written Request for Acceptance of Work. After receipt of the Contractor's Request for Acceptance of Work, SANBAG shall review all requirements of the Work and either: (1) reject the Contractor's Request for Acceptance of Work, specifying defective or uncompleted Work items, or (2) accept the Work as complete by issuing to the Contractor a Certificate of Final Acceptance and approving the final payment.

B. If SANBAG rejects the Contractor's Request for Acceptance of Work, the Contractor shall promptly remedy the defective or uncompleted Work items. Thereafter, the Contractor shall again give SANBAG a written Request for Acceptance of Work. The foregoing procedure shall apply successively thereafter until SANBAG has issued the Contractor a Certificate of Final Acceptance.

C. SANBAG requires that all Punchlist items be completed prior to Final Acceptance. If SANBAG determines that any of the Punchlist items have not been satisfactorily completed, SANBAG reserves the right to engage other contractors to complete such Punchlist items at the expense of the Contractor.

PART 2 - PRODUCTS - (NOT APPLICABLE TO THIS SECTION)

PART 3 - EXECUTION - (NOT APPLICABLE TO THIS SECTION)

PART 4 - MEASUREMENT AND PAYMENT

A. Work of this Section is considered incidental to Work under other payment items and no separate measurement or payment will be made to the Contractor for Work of this Section.

END OF SECTION

SECTION 01 78 23
OPERATION AND MAINTENANCE DATA

PART 1 - GENERAL

1.1 SUMMARY

A. This Section includes administrative and procedural requirements for preparing operation and maintenance manuals, including the following:
   1. Operation and maintenance documentation directory
   2. Emergency manuals
   3. Operation manuals for systems, subsystems, and equipment
   4. Product maintenance manuals
   5. Systems and equipment maintenance manuals

1.2 RELATED REQUIREMENTS

A. Section 01 33 00 - Submittal Procedures.

B. Section 01 79 00 - Demonstration and Training.

C. Section 01 91 13 - General Commissioning Requirements.

1.3 DEFINITIONS

A. System: An organized collection of parts, equipment, or subsystems united by regular interaction.

B. Subsystem: A portion of a system with characteristics similar to a system.

1.4 CLOSEOUT SUBMITTALS

A. Manual Content: Operations and maintenance manual content is specified in individual Specification Sections to be reviewed at the time of Section submittals. Submit reviewed manual content, formatted and organized as required by this Section.
   1. SANBAG will approve the contents of operations and maintenance submittals.
   2. Where applicable, clarify and update reviewed manual content to correspond to revisions and field conditions.

B. Format: Submit operations and maintenance manuals in the following format:
   1. PDF electronic file: Assemble each manual into a composite electronically indexed file. Submit on digital media acceptable to SANBAG.
   2. Name each indexed document file in the composite electronic index with the applicable item name. Include a complete, electronically linked operation and maintenance directory. Enable inserted reviewer comments on draft submittals.
   3. Submit six paper copies and include a complete operation and maintenance directory. Enclose title pages and directories in clear plastic sleeves. SANBAG will return three copies.

C. Manual Submittal: Submit each manual in final form prior to requesting inspection for Substantial Completion, and at least 21 days before commencing demonstrations and training.

1.5 QUALITY ASSURANCE

A. In preparation of operation and maintenance data, use personnel thoroughly trained and experienced in the operation and maintenance of the equipment or systems involved. Where manuals require written instructions, provide technical writing that clearly communicates essential data. Where maintenance manuals require Plans or diagrams, prepare Plans clearly, in an understandable format. Where operation and maintenance documentation includes information on installations by more than one factory-authorized service representative, assemble and coordinate information furnished by those representatives and prepare manuals.

PART 2 - PRODUCTS

2.1 OPERATION AND MAINTENANCE DOCUMENTATION DIRECTORY

A. Directory: Prepare a single, comprehensive directory of emergency, operation, and maintenance data and materials, listing items and their location to facilitate ready access to desired information. Include a section in the directory for each of the following:
   1. List of documents
   2. List of systems
   3. List of equipment
   4. Table of contents

B. List of Systems and Subsystems: List systems alphabetically. Include references to operation and maintenance manuals that contain information about each system.

C. List of Equipment: List equipment for each system, organized alphabetically by system. For pieces of equipment that are not part of a system, list alphabetically in a separate list.

D. Tables of Contents: Include a table of contents for each emergency, operation, and maintenance manual.

E. Identification: In the documentation directory and in each operation and maintenance manual, identify each system, subsystem, and piece of equipment with the same designation used in the Contract Documents.

2.2 OPERATION AND MAINTENANCE MANUAL FORMAT

A. Organization: Unless otherwise indicated, organize each manual into a separate section for each system and subsystem, and a separate section for each piece of equipment not part of a system. Each manual shall contain the following materials, in the order listed:
   1. Title page
   2. Table of contents
   3. Manual contents

B. Title Page: Include the following information:
   1. Subject matter included in manual
   2. Name and address of the Project
   3. Name and address of SANBAG
   4. Date of submittal.
   5. Name and contact information for the Contractor
   6. Name and contact information for SANBAG
   7. Names and contact information for major consultants to the Engineer that designed the systems contained in the manuals.
   8. Cross-reference to related systems in other operation and maintenance manuals.

C. Table of Contents: List each product included in the manual, identified by product name, indexed to the content of the volume, and cross-referenced to the Specification Section number in the Project manual.

D. If operation or maintenance documentation requires more than one volume to accommodate data, include a comprehensive table of contents for all volumes in each volume of the set.

E. Manual Contents: Organize into sets of manageable size. Arrange contents alphabetically by system, subsystem, and equipment. If possible, assemble instructions for subsystems, equipment, and components of one system into a single binder.

F. Manuals, Electronic Files: Submit manuals in the form of a multiple-file composite electronic PDF file for each manual type required.
   1. Electronic Files: Use electronic files prepared by the manufacturer where available. Where scanning of paper documents is required, configure the scanned file for minimum readable file size.
   2. File Names and Bookmarks: Enable bookmarking of individual documents based on file names. Name document files to correspond to system, subsystem, and equipment names used in the manual directory and the table of contents. Group documents for each system and subsystem into individual composite bookmarked files. Then create a composite manual so that resulting bookmarks reflect the system, subsystem, and equipment names in a readily navigated file tree. Configure the electronic manual to display the bookmark panel upon opening the file.

G. Manuals, Paper Copy: Submit manuals in the form of hard-copy, bound, and labeled volumes.

H. Binders: Use heavy-duty, three-ring, vinyl-covered, loose-leaf binders, in the thickness necessary to accommodate the contents; sized to hold 8-1/2 x 11 IN paper; with a clear plastic sleeve on the spine to hold a label describing the contents; and with pockets inside the covers to hold folded oversize sheets.
   1. If two or more binders are necessary to accommodate data for a system, organize the data in each binder into groupings by subsystem and related components. Cross-reference other binders if necessary to provide essential information for the proper operation or maintenance of the equipment or system.
   2. Identify each binder on its front and spine with a printed title ("OPERATION AND MAINTENANCE MANUAL"), Project title or name, and subject matter of contents, and indicate the Specification Section number on the bottom of the spine. Indicate the volume number for multiple-volume sets.

I. Dividers: Use heavy-paper dividers with plastic-covered tabs for each section of the manual. Mark each tab to indicate its contents. Include a typed list of products and major components of equipment included in the section on each divider, cross-referenced to the Specification Section number and the title of the Project manual.

J. Protective Plastic Sleeves: Use transparent plastic sleeves designed to enclose diagnostic software storage media for computerized electronic equipment.

K. Supplementary Text: Prepared on 8-1/2 x 11 IN white bond paper.

L. Plans: Attach reinforced, punched binder tabs on plans, and bind them with text.
   1. If oversize Plans are necessary, fold Plans to the same size as text pages and attach them as foldouts.
   2. If Plans are too large to be used as foldouts, fold and place Plans in labeled envelopes and bind envelopes in the rear of the manual. At appropriate locations in the manual, insert typewritten pages indicating plan titles, descriptions of contents, and Plan locations.
   3. Provide specially prepared Plans where necessary to supplement the manufacturer's printed data to illustrate the relationship of component parts of equipment or systems, or to provide control or flow diagrams. Coordinate specially prepared Plans with information contained in the Project Record Documents to ensure correct representation of completed installations.

M. Originals: Do not use original record documents as part of operation and maintenance manuals.

N. Specifications: Component or system Specification Sections that are copied and inserted should be complete, with all modifications.

2.3 OPERATION AND MAINTENANCE MANUAL CONTENT

A. Content: In addition to requirements in this Section, include operation data required in individual Specification Sections, as well as the following specific information:
   1. System, subsystem, and equipment descriptions. Use designations for systems and equipment indicated on the Contract Documents.
   2. Performance and design criteria if the Contractor has delegated design responsibility.
   3. Operating standards
   4. Operating procedures
   5. Operating logs
   6. Wiring diagrams
   7. Control diagrams
   8. Piped system diagrams
   9. Precautions against improper use
   10. License requirements, including inspection and renewal dates.

B. Descriptions: Include the following:
   1. Product name and model number. Use designations for products indicated on the Contract Documents. Include manufacturer's name, equipment identification, with the serial number of each component.
   2. Equipment function, operating characteristics and limiting conditions
   3. Performance curves, Engineering data and tests
   4. Complete nomenclature and number of replacement parts

C. Operating Procedures: Include the following, as applicable:
   1. Start-up procedures
   2. Equipment or system break-in procedures
   3. Routine and normal operating instructions
   4. Regulation and control procedures
   5. Instructions on stopping
   6. Normal shutdown instructions
   7. Seasonal and weekend operating instructions
   8. Required sequences for electric or electronic systems
   9. Special operating instructions and procedures

D. Systems and Equipment Controls: Describe the sequence of operation, and diagram the controls as installed.

E. Piped Systems: Diagram piping as installed, and identify color-coding where required for identification.

F. Abbreviated Operating Instructions: Abbreviated instructions for start-up, shut-down, emergency operation, safety precautions, unusual features, and troubleshooting instructions. In addition to including a copy in the Operation and Maintenance Manual, permanently secure a laminated copy adjacent to the equipment, where the copy can be easily read by operating personnel.

G. Emergency Instructions: Describe and explain warnings, trouble indications, error messages, and similar codes and signals. Include the responsibilities of SANBAG's operating personnel for notification of Installer, supplier, and manufacturer to maintain warranties.

H. Emergency Procedures: Include the following, as applicable:
   1. Instructions on stopping.
   2. Shutdown instructions for each type of emergency.

3. Operating instructions for conditions outside normal operating limits.
4. Required sequences for electric or electronic systems.
5. Special operating instructions and procedures.

2.4 PRODUCT MAINTENANCE MANUAL CONTENT

A. Organize manual into a separate section for each product, material, and finish. Include source information, product information, maintenance procedures, repair materials and sources, and warranties and bonds, as described below.

B. List each product included in the manual, identified by product name and arranged to match the manual's table of contents. For each product, list the name, address, and telephone number of the Installer or supplier and the maintenance service agent, and cross-reference the Specification Section number and title in the Project manual and Drawing or schedule designation or identifier (where applicable). Data may be taken directly from manufacturer's standard catalogs. Information shall be edited or marked to show only conditions pertinent to this Contract. This information shall also be scanned in .tif or .pdf format at a suitable resolution so that it is legible when printed.

C. Product Information: Include the following, as applicable:
   1. Product name and model number
   2. Manufacturer's name
   3. Color, pattern, and texture
   4. Material and chemical composition
   5. Reordering information for specially manufactured products

D. Maintenance Procedures: Include the manufacturer's written recommendations, as well as the following:
   1. Inspection procedures
   2. Types of cleaning agents to be used, and methods of cleaning
   3. A list of cleaning agents and methods of cleaning that could be detrimental to the product.
   4. The schedule for servicing, lubrication, routine cleaning and maintenance.
   5. Repair instructions

E. Repair Materials and Sources: Manufacturer's recommended special maintenance tools and list of spare parts and recommended stock quantities for one year of routine maintenance. Include lists of materials and local sources of materials and related services.

F. Warranties and Bonds: Include copies of warranties and bonds and lists of circumstances and conditions that would affect the validity of warranties or bonds. Include the procedures to follow and the notifications required for warranty claims.

2.5 SYSTEMS AND EQUIPMENT MAINTENANCE MANUAL CONTENT

A. List each system, subsystem, and piece of equipment not part of a system, included in the manual, identified by product name and arranged to match the manual's table of contents. Include source information, manufacturers' maintenance documentation, maintenance procedures, maintenance and service schedules, a spare parts list, maintenance service contracts, and warranty and bond information, as described below. For each product, list the name, address, and telephone number of the Installer or supplier and the maintenance service agent, and cross-reference the Specification Section number and title in the Project Manual and Plan or schedule designation or identifier where applicable.

B. Manufacturers' Maintenance Documentation: Include the following information for each component part or piece of equipment:
   1. Standard maintenance instructions and bulletins.

2. Plans, diagrams, and instructions required for maintenance, including disassembly and component removal, replacement, and assembly. If the system's control Plan is not adequate, provide simplified, professionally drawn, single line diagrams on minimum 8-1/2 x 11 IN, 20 LB white bond paper.
3. Identification and nomenclature of parts and components.
4. A list of items recommended to be stocked as spare parts.

C. Maintenance Procedures: Include the following information and items that detail essential maintenance procedures:
1. Test and inspection instructions.
2. Troubleshooting guide.
3. Precautions against improper maintenance.
4. Disassembly; component removal, repair, and replacement; and reassembly instructions.
5. Aligning, adjusting, and checking instructions.
6. Demonstration and training video recording, if available.
7. List of special tools required to service or maintain equipment.

D. Preventive Maintenance Instructions: Typewritten excerpts from manufacturer's written instructions for weekly, monthly, quarterly, annual, and other regularly scheduled maintenance prepared by a mechanical Subcontractor, with assistance from the equipment supplier.

E. Maintenance and Service Schedules: Include service and lubrication requirements, a list of required lubricants for equipment, and separate schedules for preventive and routine maintenance and service with standard time allotment.
1. Scheduled Maintenance and Service: Tabulate actions for daily, weekly, monthly, quarterly, semiannual, and annual frequencies.
2. Maintenance and Service Record: Include manufacturers' forms for recording maintenance.

F. Control Plans: Include Control Plans for equipment and components, including sequence of operations included in the control section of the Operation and Maintenance Manual submittal.

G. Spare Parts List and Source Information: Include lists of replacement and repair parts, with parts identified and cross-referenced to the manufacturers' maintenance documentation and local sources of maintenance materials and related services.

H. Maintenance Service Contracts: Include copies of maintenance agreements, with the name and telephone number of the service agent.

I. Warranties and Bonds: Include copies of warranties and bonds and lists of circumstances and conditions that would affect the validity of warranties or bonds. Also include procedures to follow and required notifications for warranty claims.

PART 3 - EXECUTION - (NOT APPLICABLE TO THIS SECTION)

PART 4 - MEASUREMENT AND PAYMENT

A. Work of this Section is considered incidental to Work under other payment items and no separate measurement or payment will be made to the Contractor for Work of this Section.

END OF SECTION

SECTION 01 78 36
WARRANTIES AND GUARANTEES

PART 1 - GENERAL

1.1 SUMMARY

A. This Section includes administrative and procedural requirements for all warranties and guarantees necessary for Contract closeout.

1.2 RELATED REQUIREMENTS

A. Section 01 33 00 - Submittal Procedures

B. Section 01 60 00 - Product Requirements

C. Section 01 77 00 - Substantial Completion

1.3 SUBMITTAL OF WARRANTIES AND GUARANTEES

A. Submit five copies to SANBAG of each required warrantee and guarantee properly executed by the Contractor, or by the Contractor and Subcontractor, Supplier, or manufacturer.

B. Organize the warranty documents into an orderly sequence based on the table of contents of the Specifications, CSI Masterformat 2004, and the table of contents of the Project Manual.
   1. Bind warranties and guarantees in heavy-duty, commercial quality, three-slant ring, vinyl-covered, loose-leaf binders, with clear front and spine to receive inserts, thickness as necessary to accommodate the contents, and sized to receive 8-1/2 x 11 IN paper.
   2. Provide heavy paper dividers with plastic-covered tabs for each separate warranty. Mark each tab to identify the product or installation. Provide a typed description of the product or installation, including the name of the product and the name, address, and telephone number of the Installer.
   3. Include on a separate typed sheet (if the information is not contained in warranty or guarantee form) a description of the product or installation, and the name, address, telephone number, and responsible person for the applicable installer, supplier, and manufacturer.
   4. Identify each binder on the front and spine with the typed or printed title "WARRANTIES AND GUARANTEES," the Project name, and the name of the Contractor. If more than one volume of warranties and guarantees is produced, identify the volume number of each binder.
   5. Warranty Electronic File: Scan warranties and bonds and assemble the complete warranty and bond submittal package into a single indexed electronic PDF file, with links enabling navigation to each item. Provide a bookmarked table of contents at the beginning of the document.

C. Provide additional copies of each warranty and include in the operation and maintenance manuals as required in Section 01 78 23 - Operations and Maintenance Data.

D. Special Project Warranty and Manufacturer's Guarantee Forms: Forms for Special Project warranties and for manufacturer's guarantees are included at the end of this Section. Prepare a written document utilizing the appropriate form, ready for execution by the Contractor or the Contractor and Subcontractor, Supplier, or manufacturer. Submit a draft to SANBAG for approval prior to final execution.
   1. Refer to Specifications for specific content requirements and particular requirements for submittal of special Project warranties.

2. Prepare standard product warranties and product guarantees, excepting manufacturer's standard printed warranties and guarantees, on the Contractor's, Subcontractor's, Material Supplier's, or manufacturer's own letterhead, and addressed to SANBAG.
3. Warranty and guarantee letters shall be signed by all responsible parties, and by the Contractor in every case, with modifications only as approved by SANBAG to suit the conditions pertaining to the warranty or guarantee.

E. Manufacturer's Guarantee Forms: Manufacturer's guarantee forms may be used in lieu of special Project forms included at the end of the Section. Manufacturer's guarantee forms shall contain appropriate terms and identification, ready for execution by the required parties.
1. If proposed terms and conditions restrict guarantee coverage or require actions by SANBAG beyond those specified, submit a draft of the guarantee to SANBAG for review and acceptance before performance of the Work.
2. In other cases, submit a draft of the guarantee to SANBAG for approval prior to final execution of the guarantee.

F. Signatures: The warranty and guarantee documents should be signed by persons authorized to sign warranties and guarantees on behalf of the entity providing the warranty or guarantee. The Contractor shall co-sign all warranties, except the manufacturers' printed guarantees.

1.4 TIME OF WARRANTY AND GUARANTEE SUBMITTALS

A. Time of Submittal: Submit written warranties to SANBAG for designated portions of the Work that are Substantially Complete as determined by SANBAG.

B. Submittal: Submit fully executed copies of warranties and guarantees within seven days of the date of Substantial Completion, but not later than three days prior to the date of application for final payment.

C. Date of Warranties and Guarantees: Unless otherwise directed, the commencement date for warranty and guarantee periods shall be the date of Substantial Completion and acceptance of such Work.

1.5 WARRANTIES AND GUARANTEES

A. All warranties and manufacturer's guarantees shall name SANBAG as the beneficiary. For equipment, products, or components thereof bearing a manufacturer's warranty of guarantee that extends for a period of time beyond the Contractor's warranty and guarantee, so state in the warranty or guarantee.

B. Disclaimers and Limitations: Manufacturer's disclaimers and limitations on product warranties shall not relieve the Contractor of warranty on the Work that incorporates the products, nor shall they relieve suppliers, manufacturers, and installers required to countersign special warranties with the Contractor.

C. Related Damages and Losses: When correcting warrantied Work that has been found defective, remove and replace other Work that has been damaged as a result of such defect or that must be removed and replaced to provide access for correction of the warranted Work.

D. Reinstatement of Warranty: When Work covered by a warranty has been found defective and has been corrected by replacement or rebuilding, reinstate the warranty by written endorsement. The reinstated warranty shall be equal to the original warranty with an equitable adjustment for depreciation.

E. Replacement Cost: Upon determination that Work covered by a warranty has been found to be defective, replace or reconstruct the Work to a condition acceptable to SANBAG, complying with applicable requirements of the Contract Documents. The Contractor shall be responsible for all costs for replacing or reconstructing defective Work, regardless of whether SANBAG has benefited from use of the Work through a portion of its anticipated useful service life.

F. SANBAG Recourse: Written warranties made to SANBAG are in addition to implied warranties and shall not limit the duties, obligations, rights, and remedies otherwise available under law; nor shall warranty periods be interpreted as limitations on time in which SANBAG can enforce such other duties, obligation, rights, or remedies.

G. Rejection of Warranties: SANBAG reserves the right to reject warranties and disallow the use of products with warranties in conflict with Contract Document requirements.

H. Warranty as Condition of Acceptance: SANBAG reserves the right to refuse to accept Work for the Project where a special warranty, certification, or similar commitment is required until evidence is presented that those required to counter-sign such commitments are willing to do so.

PART 2 - PRODUCTS - (NOT APPLICABLE TO THIS SECTION)

PART 3 - EXECUTION - (NOT APPLICABLE TO THIS SECTION)

PART 4 - MEASUREMENT AND PAYMENT

A. Work of this Section is considered incidental to Work under other payment items and no separate measurement or payment will be made to the Contractor for Work of this Section.

END OF SECTION

WARRANTY/GUARANTEE

FOR_____WORK

We, the undersigned, do hereby warranty and guarantee that the parts of the Work described above which we have furnished and/or installed for SANBAG are in accordance with the Contract Documents, and that all said Work as installed will fulfill or exceed all of the Warranty and Guarantee requirements. We agree to repair or replace Work installed by us, together with any adjacent Work that is displaced or damaged by the warranted work that proves to be defective in workmanship, material, or operation within a period of _____ from the date of final acceptance by SANBAG or from the Date of Certificate of Substantial Completion, whichever is earlier. Ordinary wear and tear and unusual neglect or abuse are excepted. The period of this warranty/guarantee shall expire on _____.

In the event of our failure to comply with the above-mentioned conditions within a reasonable time period determined by SANBAG, after notification in writing, we, the undersigned, all collectively and separately, hereby authorize SANBAG to have said defective Work repaired and/or replaced and made good, and agree to pay to SANBAG upon demand all monies that SANBAG may expend in making good said defective Work, including all collection costs and reasonable attorney fees.

_____
(Subcontractor, Sub Subcontractor, Manufacturer, or Supplier)

By_____

Title_____

State License No._____Date_____

_____
(Contractor)
By_____

State License No._____Date_____

Local Representative. For maintenance, repair, or replacement service, contact:

Name:_____

Address:_____

Phone Number:_____

SECTION 01 78 39
PROJECT RECORD DOCUMENTS

PART 1 - GENERAL

1.1 SUMMARY

A. This Section addresses administrative and procedural requirements for preparing project As-Built Drawings, Specifications, and Construction Schedule, Product Data and other miscellaneous records submitted as required by the Contract Documents.

1.2 RELATED REQUIREMENTS

A. Section 01 33 00 - Submittal Procedures

B. Section 01 77 00 - Substantial Completion

C. Section 01 77 19 - Project Closeout

PART 2 - PRODUCTS

2.1 AS-BUILT DRAWINGS

A. Record Prints: Maintain one set of marked-up paper copies of the Contract Drawings (Plans) and Shop Drawings incorporating new and revised drawings as modifications are issued.
   1. Preparation: Mark record prints to show the actual installation where installation varies from that shown originally. Require the individual or entity who obtained the record data, whether the individual or entity is an Installer, Subcontractor, or similar entity, to provide information for preparation of corresponding marked-up record prints as follows:
      a. Provide complete information on concealed elements that would be difficult to identify or measure and record later.
      b. Accurately record information in an acceptable drawing technique.
      c. Record data as soon as possible after obtaining it.
      d. Record and check the markup before enclosing concealed installations.
      e. Cross-reference record prints to corresponding archive photographic documentation.
   2. Content: Types of items requiring marking include, but are not limited to, the following:
      a. Dimensional changes and revisions to details shown on Plans. The lines shall be located on the Plans dimensionally from a fixed point, such as a street-curb line, centerline, permanent structure, or an exposed part of a structure.
      b. Depths of foundations below first floor.
      c. Locations and depths of underground utilities including horizontal and vertical location of underground utilities affected by the Work. This includes new utilities installed and utilities found and left in place.
      d. Revisions to routing of piping and conduits.
      e. Revisions to electrical circuitry.
      f. Actual equipment locations, duct size and routing.
      g. Changes made by Change Order or Change Directive.
      h. Changes made following SANBAG's written orders.
      i. Details not on the original Plans.
      j. Field records for variable and concealed conditions.
      k. Record information on the Work that is shown only schematically.
      l. Actual locations of trackwork, signals, and signal conductors.

3. Mark Plans and Shop Drawings completely and accurately. Use personnel proficient at recording graphic information in production of marked-up prints. Record new information and details that are recognized to be of importance to SANBAG, but that were not shown on either the Plans or on Shop Drawings. Record changes on whichever Plan is most capable of showing the "field" condition fully and accurately; and when Shop Drawings are used for As-Built Drawings.
4. Mark the As-Built set with erasable, red-colored pencil. Use other colors to distinguish between changes for different categories of the Work at same location.
5. Mark important additional information that was either shown schematically or omitted from the original Plans.
6. Note Construction Change Directive numbers, RFI numbers, option numbers, Change Order numbers, and similar identification, where applicable.
7. Each drawing sheet, marked or unmarked, shall be stamped "As-Built" in red ink.
8. As-Built drawings require approval by SANBAG.
9. Submit two complete sets of full-size marked-up prints and a complete PDF electronic file. Include each drawing sheet whether or not changes and additional information were recorded.

2.2 AS-BUILT SPECIFICATIONS

A. Preparation: Mark-up Specifications to indicate the actual product installation whenever the installation varies from that indicated in Specifications, addenda, and contract modifications.
   1. Provide detailed information on concealed products and equipment installations that cannot be readily identified and recorded later.
   2. Mark-up copy with the proprietary name and model number of products, materials, and equipment furnished, including substitutions and product options selected.
   3. Record the name of the manufacturer, supplier, and Installer, and include other information necessary to provide a record of the selections made.
   4. For each principal product indicate whether Record Product Data has been submitted in operation and maintenance manuals instead of submitted as record Product Data.
   5. Note related Change Orders, record Product Data, and Record Drawings where applicable.

B. Format: Submit As-Built Specifications as paper copy and scanned PDF electronic files of the marked-up paper copy of the Specifications.

2.3 AS-BUILT CONSTRUCTION SCHEDULE

A. In order to obtain Substantial Completion a final As-Built schedule shall be submitted and approved by the SANBAG, in accordance with Section 01 32 17 Construction Project Schedule.

2.4 PRODUCT DATA

A. Preparation: Mark-up Product Data to indicate the actual product installation whenever the installation varies substantially from that indicated in the Product Data submittal.
   1. Give particular attention to information on concealed products and installations that cannot be readily identified and recorded later.
   2. Include significant changes in the product delivered to the Work Site, and changes in the manufacturer's written instructions for installation.
   3. Note related Change Orders, Record Specifications, and Record Drawings where applicable.

B. Format: Submit Record Product Data as paper copy and scanned PDF electronic file(s) of the marked-up paper copy of the Product Data. Include a Record Product Data directory organized by Specification section number and title, electronically linked to each item of the Record Product Data.

2.5 MISCELLANEOUS RECORDS

A. Assemble miscellaneous records required by other Specification sections for miscellaneous record keeping and submittal in connection with actual performance of the Work. Bind or file miscellaneous records and identify each, ready for continued use and reference.

B. Format: Submit miscellaneous record submittals as paper copy and scanned PDF electronic file(s) of marked-up miscellaneous record submittals. Include a miscellaneous record submittals directory organized by Specification section number and title, electronically linked to each item of the miscellaneous record submittals.

2.6 SUBMITTAL TITLE

A. Label each document "AS-BUILT" in two-inch high printed letters or a height appropriate to document.

PART 3 - EXECUTION

3.1 RECORDING AND MAINTENANCE

A. The monthly progress payment application will not be processed by SANBAG until the Contractor is found by SANBAG to have completely and accurately recorded all as-built information for Work performed through the period of the progress payment application.

B. Store record documents and Samples in the field office in files and racks apart from the Contract Documents (Plans) used for construction. Do not use Project Record Documents for construction purposes. Maintain documents in good order and in a clean, dry, legible condition, protected from deterioration and loss. SANBAG shall be provided access to Project Record Documents.

PART 4 - MEASUREMENT AND PAYMENT

4.1 BASIS OF PAYMENT

A. Work of this Section is considered incidental to Work under other payment items and no separate measurement or payment will be made to the Contractor for Work of this Section. As-Built Drawings and photographs will be reviewed each month and the monthly progress payment will only be approved and processed if the Contractor is found by SANBAG to be in conformance with the requirements of this Section.

END OF SECTION

This page intentionally left blank.

SECTION 01 79 00
DEMONSTRATION AND TRAINING

PART 1 - GENERAL

1.1 SUMMARY

A. This Section includes administrative and procedural requirements for instructing SANBAG's personnel, including the following:
   1. Demonstration of the operation of systems, subsystems, and equipment.
   2. Training in operation and maintenance of systems, subsystems, and equipment.
   3. Demonstration and training video recordings.

1.2 RELATED REQUIREMENTS

A. Section 01 31 00 - Project Management and Coordination

B. Section 01 78 23 - Operations and Maintenance Data

1.3 INFORMATIONAL SUBMITTALS

A. Instruction Program: Submit an outline of the instructional program for demonstration and training, including a list of training modules and a schedule of proposed dates, times, length of instruction time, and instructors' names for each training module. Include learning objective and outline for each training module.

B. Indicate the proposed training modules using manufacturer-produced demonstration and training video recordings for systems, equipment, and products in lieu of video recording of a live instructional module.

C. Qualification Data for instructor and videographer (See Quality Assurance Subsection 1.5, below).

D. Attendance Record: For each training module, submit a list of participants and the length of the instruction time.

E. Evaluations: For each participant and for each training module, submit the results and documentation of a performance-based test.

1.4 CLOSEOUT SUBMITTALS

A. Demonstration and Training Video Recordings: Submit two copies of the recordings within seven days of the end of each training module.
   1. Identification: On each copy, provide an applied label with the following information:
      a. Name of Project
      b. Name of the Engineer
      c. Name of the Construction Manager
      d. Name of the Contractor
      e. Date of the video recording
   2. Transcript: Prepared in PDF electronic format. Include a cover sheet with the same label information as the corresponding video recording, and a table of contents with links to corresponding training components. Include the name of the Project and the date of the video recording on each page.

3. Training Manuals: At the completion of training, submit complete training manual(s) for SANBAG's use, prepared and bound in a format matching the operation and maintenance manuals; also submit one copy in PDF electronic file format on compact disc.

1.5 QUALITY ASSURANCE

A. Instructor Qualifications: A factory-authorized service representative experienced in operation and maintenance procedures and training.

B. Videographer Qualifications: A professional videographer who is experienced in photographing demonstration and training events similar to those required.

C. Pre-instruction Conference: Conduct the conference at the Work Site to review methods and procedures related to the demonstration and training including but not limited to the following:
   1. Inspect and discuss locations and other facilities required for instruction.
   2. To avoid delays review and finalize the instruction schedule and verify the availability of educational materials, instructors' personnel, audiovisual equipment, and facilities needed.
   3. Review the required content of instruction.

1.6 COORDINATION

A. Coordinate the instruction schedule with SANBAG's operations. Adjust the schedule as required to minimize disrupting SANBAG's operations and to ensure availability of SANBAG's personnel.

B. Coordinate instructors, providing notification of dates, times, length of instruction time, and course content.

C. Coordinate the content of training modules with content of approved emergency, operation and maintenance manuals. Do not submit the instruction program until the operation and maintenance data has been reviewed and approved by SANBAG.

PART 2 - PRODUCTS

2.1 INSTRUCTION PROGRAM

A. Program Structure: Develop an instruction program that includes individual training modules for each system and for equipment not part of a system as required by individual Specification Sections.
   1. Camera surveillance systems: 4 hours
   2. Access control systems: 4 hours
   3. Electrical service and distribution, including transformers, switchboards, panel boards, uninterruptible power supplies, and motor controls: 4 hours each.
   4. Packaged engine generators, including transfer switches: 8 hours.
   5. Exterior maintenance systems, including irrigation systems: 4 hours.

B. Training Modules: Develop a learning objective and teaching outline for each module. Include a description of specific skills and knowledge that participant is expected to master. For each module, include instruction for the following as applicable to the system, equipment, or component:
   1. Basis of system design, operational requirements, and criteria – Include the following:
      a. System, subsystem, and equipment descriptions
      b. Performance and design criteria if the Contractor is delegated design responsibility.
      c. Operating standards
      d. Regulatory requirements
      e. Equipment function
      f. Operating characteristics

g. Limiting conditions
h. Performance curves

2. Documentation: Review the following items in detail:
   a. Emergency manuals
   b. Operations manuals
   c. Maintenance manuals
   d. Project record documents
   e. Identification systems
   f. Warranties and bonds
   g. Maintenance service agreements and similar continuing commitments.
3. Emergencies: Include the following, as applicable:
   a. Instructions on meaning of warnings, trouble indications, and error messages.
   b. Instructions on stopping
   c. Shutdown instructions for each type of emergency.
   d. Operating instructions for conditions outside of normal operating limits.
   e. Sequences for electric or electronic systems.
   f. Special operating instructions and procedures.
4. Operations: Include the following, as applicable:
   a. Startup procedures
   b. Equipment or system break-in procedures
   c. Routine and normal operating instructions
   d. Regulation and control procedures
   e. Control sequences
   f. Safety procedures
   g. Instructions on stopping
   h. Normal shutdown instructions
   i. Operating procedures for emergencies
   j. Operating procedures for system, subsystem, or equipment failure.
   k. Seasonal and weekend operating instructions.
   l. Required sequences for electric or electronic systems.
   m. Special operating instructions and procedures
   n. Noise and vibration adjustments
   o. Economy and efficiency adjustments
   p. Effective energy utilization
5. Adjustments: Include the following:
   a. Alignments
   b. Checking adjustments
   c. Noise and vibration adjustments
   d. Economy and efficiency adjustments
6. Troubleshooting: Include the following:
   a. Diagnostic instructions
   b. Test and inspection procedures
7. Maintenance: Include the following:
   a. Inspection procedures
   b. Types of cleaning agents to be used, and methods of cleaning.
   c. List of cleaning agents and methods of cleaning that are detrimental to product.
   d. Procedures for routine cleaning
   e. Procedures for preventive maintenance
   f. Procedures for routine maintenance
   g. Instruction on use of special tools
8. Repairs: Include the following:
   a. Diagnosis instructions
   b. Repair instructions
   c. Disassembly; component removal, repair, and replacement; and reassembly instructions.

d. Instructions for identifying parts and components
e. Review of spare parts needed for operation and maintenance.

PART 3 - EXECUTION

3.1 PREPARATION

A. Assemble educational materials necessary for instruction including a documentation and training module. Assemble training modules into a training manual organized in coordination with requirements in Section 01 78 23 - Operations and Maintenance Data.

3.2 INSTRUCTION

A. Facilitator: Engage a qualified facilitator to prepare the instruction program and training modules, to coordinate instructors, and to coordinate between the Contractor and SANBAG for the number of participants, instruction times, and location.

B. Provide manufacturer's instructors or instructors certified by the manufacturer as being experienced in operation and maintenance procedures for each system, subsystem, or piece of equipment to instruct SANBAG's personnel on how to adjust, operate, and maintain systems, subsystems, and equipment not part of a system.
   1. SANBAG will furnish an instructor to describe the basis of system design, operational requirements, criteria, and regulatory requirements.
   2. SANBAG will furnish an instructor to describe SANBAG's operational philosophy.
   3. SANBAG will furnish the Contractor with names and positions of participants.

C. Scheduling: Provide instruction at mutually agreed-on times. For equipment that requires seasonal operation, provide similar instruction at the start of each season.
   1. Schedule training with SANBAG with at least seven days advance notice.
   2. Schedule training to conform to personnel availability at the Project site, and to conclude prior to the start-up of system.

D. Training Location and Reference Material: Conduct training onsite in the completed and fully operational facility, using the actual equipment in-place. Conduct training using final operation and maintenance data submittals.

E. Evaluation: At the conclusion of each training module, assess and document each participant's mastery of the module by use of an oral, written, or demonstration performance-based test.

F. In addition to written technical descriptions, training shall detail the training program itself to allow those who have completed training to provide training for new employees, resulting in a self-perpetuating training program.

G. Cleanup: Collect used and leftover educational materials and deliver to SANBAG. Remove instructional equipment. Restore systems and equipment to the condition existing before initial training use.

3.3 DEMONSTRATION AND TRAINING VIDEO RECORDINGS

A. General: Engage a qualified commercial videographer to record demonstration and training video recordings. Record each training module separately. Include classroom instructions and demonstrations, board diagrams, and other visual aids, but not student practice.
   1. At the beginning of each training module record each chart containing the learning objective and the lesson outline.
   2. Video shall allow self-training, so future employees may view it at their own convenience and be able to comprehend the system without needing to have an instructor in attendance.

B. Video: Provide high definition video resolution converted to a format file type acceptable to SANBAG, on electronic media.
   1. Electronic Media: Read-only format compact digital video disc acceptable to SANBAG, with a commercial-grade graphic label.
   2. File Hierarchy: Organize the folder structure and file locations according to the Project manual table of contents. Provide a complete screen-based menu.
   3. File Names: Utilize file names based on the name of the equipment generally described in the video segment, as identified in Project Specifications.
   4. The Contractor and Installer Contact File: Using appropriate software, create a file for inclusion on the Equipment Demonstration and Training DVD that describes the following for each Contractor involved on the Project, arranged according to Project table of contents:
      a. Name of the Contractor/Installer
      b. Business address
      c. Business phone number
      d. Point of contact
      e. E-mail address

C. Recording: Mount the camera on a tripod before starting recording unless otherwise necessary to adequately cover the area of demonstration and training. Display continuous running time. Film training session(s) in segments not-to-exceed 15 minutes.
   1. Produce segments to present a single significant piece of equipment per segment.
   2. Organize segments with multiple pieces of equipment to follow the order of the Project manual table of contents.
   3. Where a training session on a particular piece of equipment exceeds 15 minutes, stop filming and pause the training session. Begin the training session again upon commencement of a new filming segment.

D. Light Levels: Verify light levels are adequate to properly light equipment. Verify equipment markings are clearly visible prior to recording. Furnish additional portable lighting as required.
   1. Narration: Describe scenes on the video recording by audio narration using a microphone while the video is recorded. Include a description of the items being viewed.
   2. Transcript: Provide a transcript of the narration. Display images and running time captured from the videotape opposite the corresponding narration segment.
   3. Pre-produced Video Recordings: Provide video recordings used as a component of training modules in the same format as recordings of live training.

PART 4 - MEASUREMENT AND PAYMENT

A. Work of this Section is considered incidental to Work under other payment items and no separate measurement or payment will be made to the Contractor for Work of this Section.

END OF SECTION

SECTION 01 91 13
GENERAL COMMISSIONING REQUIREMENTS

PART 1 - GENERAL

1.1 SUMMARY

A. Commissioning: Commissioning is a quality oriented process for achieving, verifying, and documenting the performance of facilities, systems, and assemblies to ensure that SANBAG's defined objectives and criteria are satisfied. The Contractor will demonstrate to SANBAG that it has completed the Project in conformance with the Contract Documents and that the Project will perform as specified in the Contract Documents.

B. This Section includes general requirements that apply to implementation of commissioning process for systems, subsystems, equipment, assemblies, and components (collectively, "systems"). Commissioning shall:
   1. Verify that applicable systems are installed in accordance with the Contract Documents, manufacturers' recommendations, and industry accepted minimum quality standards, and that such installations undergo an adequate operational checkout by their installers.
   2. Verify and document proper performance of applicable equipment and systems.
   3. Verify that Operation & Maintenance (O&M) documentation delivered and kept onsite is complete, current, and accurate.
   4. Verify that SANBAG's operating and maintenance personnel are adequately trained by respective manufacturers/installers and prepared to undertake O&M duties.

C. The Contractor shall be responsible for providing all test and commissioning equipment, tools, software, programming, programming support and incidentals and qualified technicians to start up, calibrate, debug and verify proper functioning of systems and subsystems as required by the established Commissioning Plan.

D. Systems to be commissioned shall include, but not be limited to:
   1. Video Camera System, if applicable
   2. Irrigation Controller, if applicable
   3. Emergency electrical power generator and distribution systems, with automatic transfer switch and controls, if applicable

1.2 RELATED SECTIONS

A. Section 01 78 23 - Operation and Maintenance Data

B. Divisions 02 through 49 Sections for specific requirements relating to systems, assemblies and installations.

1.3 DEFINITIONS

A. Basis of Design: A document prepared by system designer that records concepts, calculations, decisions, assumptions, and product selections used to satisfy the OPR and other regulatory requirements, standards and guidelines.

B. Commissioning Plan: A document that describes the organization, schedule, resources allocated, and documentation required to execute and complete commissioning processes.

C. Construction Checklist: A form used by Contractor to verify that appropriate components are onsite, ready for installation, correctly installed, and passed functional testing.

D. CxA: Commissioning Authority appointed by SANBAG to plan, schedule, and coordinate the Commissioning Team in implementing the commission processes. CxA shall be independent of system designer.

E. Functional Testing: Generally refers to testing of a completely installed system or subsystem and demonstrates proper control of systems and equipment. Initially performed by Contractor (called "proofing") and witnessed afterward by the CxA to attain "acceptance" of that system or subsystem.

F. Owner's Project Requirements (OPR): A document prepared by SANBAG that details the functional requirements for various systems to be commissioned and lists SANBAG's expectations for operating and maintaining installed systems. OPR shall include, but not be limited to Project goals, measurable performance criteria, cost considerations, quality benchmarks, success criteria, and supporting information.

G. Systems, Subsystems, Equipment, Assemblies, and Components: When these terms are used collectively or individually, they shall mean the "as-constructed" systems, subsystems, equipment, assemblies, and components covered under the Commissioning Plan.

H. Verification: A process by which specific documents, components, assemblies, equipment, subsystems and systems, and interfaces among several systems are confirmed as complying with governing OPR criteria. Performed by Contractor and witnessed by the CxA.

1.4 COMMISSIONING TEAM

A. Members appointed by SANBAG: The CxA, O&M personnel, representatives of facility user(s), the Architect or Engineer of record, and design consultants.

B. Members appointed by Contractor: Qualified and experienced individuals engaged by the Contractor or Subcontractor(s), each having the authority to act on behalf of the entity he/she represents, explicitly organized to implement the commissioning processes through a coordinated collaboration with all Commissioning Team members. Such members shall include, but not be limited to Contractor's onsite management and supervision representatives (project manager, project engineer, project superintendent) and Contractor's technical specialists, subcontractors, installers, suppliers, manufacturers, and other persons as CxA may deem appropriate. (Independent testing, adjusting, and balancing service providers and controls/instrumentation specialists shall be deemed as appropriate other persons.)

1.5 SANBAG'S RESPONSIBILITIES

A. Assign O&M personnel and schedule them to participate in Commissioning Team activities.

B. Develop Basis of Design and OPR. Compile and make such information available to all Commissioning Team members for reference and use.

C. Appoint CxA who shall be authorized to act on SANBAG's behalf in directing and implementing the commissioning processes. CxA will provide construction checklists to Contractor.

1.6 CONTRACTOR'S RESPONSIBILITIES

A. The Contractor shall assign representatives with expertise and authority to act on its behalf, and shall schedule them to participate in and perform commissioning process activities including, but not limited to, the following.
   1. Evaluate performance deficiencies identified in test reports and, in collaboration with the entity responsible for system and equipment installation, recommend corrective action.
   2. Cooperate with CxA to resolve issues recorded in the test reports and issues log.
   3. Attend the commissioning team meetings held on a weekly basis or as often as mutually agreed by the participants.

4. Integrate and coordinate commissioning process activities with the Contractor's construction schedule.
5. Review and accept construction checklists provided by SANBAG.
6. Complete construction checklists, in electronic form, as Work is completed. Provide them to CxA on a daily basis or as often as the Commissioning Plan stipulates.
7. Complete commissioning process test procedures. Review and accept CxA performed commissioning test procedures.
8. Witness the start-up and activation of dynamic equipment and related components.
9. Compile test data, inspection reports, and certificates; include them in the respective systems O&M manuals and final commissioning process report.
10. Verify the execution of commissioning process activities, using random sampling. Sampling rates may vary from 1 to 100 percent as the CxA may direct. Verification will include, but is not limited to, equipment submittals, construction checklists, training, operating and maintenance data, tests, and test reports to verify compliance with OPR. When a random sample does not meet its requirement, immediately report the deficiency to the CxA and SANBAG. The CxA will note the deficiency in the Issues Log.

1.7 COMMISSIONING PLAN

A. The Commissioning Plan will be developed jointly by the CxA and Contractor. The Commission Plan shall be prepared by Contractor with input from the CxA. The Commissioning Plan shall be fully developed prior to completing the installation of subject systems. The Contractor is obligated to provide all necessary information pertaining to actual equipment used and installation procedures necessary to prepare the Commissioning Plan. If Contractor initiates system changes that alter the established commissioning process, the Contractor shall promptly notify the responsible system designer(s), the CxA and SANBAG. The Commissioning Plan shall include, but not be limited to the following:
   1. Purpose of the commissioning
   2. Detail of the commissioning process
   3. Commissioning team members' responsibilities
   4. Describe Pre-functional Construction Checklist Procedures
   5. Provide a guideline for acceptance of each piece of equipment or system.
   6. Systems to be commissioned

1.8 WORK TO RESOLVE DEFICIENCIES

A. In some systems, maladjustments, misapplied equipment, and/or deficient performance under varying loads will result in a system that does not meet the original design intent. Correction of work will be completed under direction of the design professional, with input from the Contractor, equipment supplier/manufacturer, and SANBAG.

1.9 ADDITIONAL COMMISSIONING

A. Additional commissioning activities may be required after system adjustments, replacements, etc., have been completed. The Contractor, Subcontractors, and Suppliers shall include a reasonable contingency sufficient to complete this work as part of original contractual obligations.

B. Corrective work shall be completed in a timely fashion to permit the timely completion of the commissioning process. Limited experimentation to render system performance will be permitted. If SANBAG deems the experimentation effort to be ineffective or untimely to the commissioning process, SANBAG will notify the Contractor indicating the nature of the problem, expected steps to be taken and the deadline for completion of activities. If the deadline passes without resolution of the problem, SANBAG reserves the right to obtain supplementary services and equipment to resolve the problem. Costs incurred to solve the problems in an expeditious manner will be borne solely by the Contractor.

1.10 COMMISSIONING FIELD NOTEBOOK

A. A Commissioning Field Notebook (CFN) shall be prepared by the Contractor to identify and keep track of all pertinent commissioning documentation required during the installation, start-up, checkout and commissioning phases. The CFN shall be utilized and maintained by the Contractor onsite and will be made available to all Subcontractors and Suppliers, as well as the CxA and SANBAG, for reference and use. The CFN provides a single point for the Commissioning Team to file, copy and organize all pertinent commission process information. The CFN shall be formatted to contain at least the following:
   1. Summary describing notebook contents and use.
   2. Copy of formal Commissioning Plan for field reference.
   3. Listing of all Specifications documentation requirements per each Specification Section, with construction completion sign off's by the appropriate entities. Such documents include piping pressure testing, for example.
   4. Flushing reports, electrical circuit tests, factory start-up reports and any field testing related to commissioning.
   5. Tabs for each Specification Section with copies of pre-functional and functional test check sheets and space for related Contractor-furnished documents.
   6. Commissioning project reports, resolution logs schedule information or any other documentation.
   7. Updated copy of CxA's Issues Log.

1.11 PRE-FUNCTIONAL CONSTRUCTION CHECKLISTS

A. Using the Pre-functional Construction Checklists, the Contractor must verify that the systems installed are in compliance with the Construction Documents and are fully functional. Commissioning is not intended to be a testing or inspection function that replaces any of the Contractor's or subcontractors' obligations for testing and proof of performance. Functional testing will only begin when checklists are completed by the appropriate subcontractors/installers/suppliers/manufacturers, signed and returned to the Contractor.

1.12 FUNCTIONAL TESTING

A. Functional testing is performed by experienced and qualified technicians of the Contractor and Subcontractor(s) responsible for installation as facilitated and supervised by the Contractor and as may be observed by the CxA and SANBAG. Functional testing will verify proper sequencing, operation and performance of installed equipment and systems under realistic operating conditions. Functional testing will follow up with written Functional Test Procedures, with test results documented for project's permanent record.

1.13 DOCUMENTATION

A. In addition to the Pre-functional Construction Checklists and Functional Test Procedures, written documentation will be maintained for all other commissioning activities. Project communication reports shall be issued by the Contractor to the CxA and SANBAG to document apparent deficiencies identified during examination of design and construction documents, daily work activities onsite, construction deficiencies and passing or failing functional test results. At the end of the commissioning process, all documentation will be assembled and summarized in the Final Commissioning Report prepared by Contractor with the CxA's input.

1.14 DEFICIENCY RESOLUTION

A. When an Inspection Report is issued to address an identified deficiency, the Contractor shall forward these reports to the appropriate entities to initiate corrective action in an expeditious manner. The responsible designers may only be relied upon for supplemental instructions or design modifications and issuance of final details. Contractor, Subcontractors and Suppliers shall be relied upon for implementation of that change or clarification.

PART 2 - PRODUCTS - (NOT APPLICABLE TO THIS SECTION)

PART 3 - EXECUTION - (NOT APPLICABLE TO THIS SECTION)

PART 4 - MEASUREMENT AND PAYMENT

A. Work of this Section is considered incidental to Work under other payment items and no separate measurement or payment will be made to the Contractor for Work of this Section.

END OF SECTION

This page intentionally left blank.

SBTC GENERATOR/LANDSCAPE MODIFICATION

PROJECT SPECIFIC SPECIFICATIONS August 8, 2016

The Project Specific Specifications for the San Bernardino Transit Center Site Fence Modification have been prepared under the direction of the following licensed professionals:

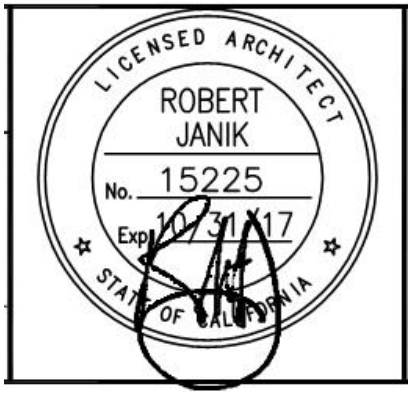	**Robert Janik, AIA, LEED AP** Architectural		**Mark Harper, PE** Structural
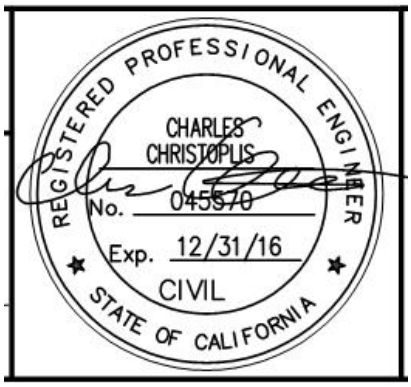	**Charles Christoplis, PE** Civil		**Raymond Genato, PE** Electrical
	Heath Habig, ASLA Landscape Architecture		

SECTION 02 41 00
DEMOLITION

PART 1 - GENERAL

1.1 SUMMARY

A. Furnish labor, materials, tools, equipment, and services for Demolition, as indicated, in accordance with provisions of Contract Documents.

B. Completely coordinate with work of other trades.

1.2 QUALITY ASSURANCE

A. Conduct work in accordance with OSHA and EPA requirements.

B. National Fire Protection Association (NFPA):
   1. NFPA 241 Standards for Safeguarding Construction, Alteration, and Demolition Operations.

C. Design, engineering, and construction of shoring, bracing and supports are responsibility of Contractor.
   1. Employ a Registered Engineer, licensed to practice structural engineering in state in which project is located.
   2. Design to support dead, live, and lateral, wind or seismic loads required by code or otherwise indicated, along with construction loads during demolition until permanent construction is in place.

1.3 DESCRIPTION

A. Work Includes:
   1. Demolition of designated structures.
   2. Removal of demolition debris.
   3. Protection of construction to remain, including:
      a. Utilities.
      b. Other items indicated.

B. Condition of Existing Structures to be Demolished:
   1. Owner assumes no responsibility for actual condition of structures to be demolished.
   2. Owner will maintain building conditions existing at time of inspection for bidding purposes insofar as practicable.

C. Standpipes:
   1. Maintain in operable condition and available for use by fire department.
   2. Do not demolish more than one floor below floor being demolished.

1.4 JOB CONDITIONS

A. Perform preliminary investigations to ascertain extent of work.
   1. Conditions apparent by investigation shall not be allowed as claim for extra cost.

B. Obtain and pay for permits required by authorities having jurisdiction and notify interested utilities companies prior to commencement of activities.

C. Obtain approval of authorities having jurisdiction for work affecting existing means of egress.
   1. Review with and obtain approval of authorities for temporary construction which affects such areas.
   2. Obtain approval of fire authorities.

D. Separate, store and dispose of hazardous materials and toxic wastes in accordance with local and EPA regulations and criteria listed below:
   1. Disposal of fluorescent light tubes in open containers is not permitted.
   2. Disposal of ballasts and other building elements containing PCBs in open containers is not permitted.
   3. Disposal of building elements containing mercury in open containers is not permitted.

PART 2 - PRODUCTS - NOT USED

PART 3 - EXECUTION

3.1 GENERAL DEMOLITION PROCEDURES

A. Items Designated for Re-use:
   1. Remove, tag, protect from damage, store and deliver to locations designated.
   2. Brace motors attached to flexible mountings until reinstallation.

B. Demolition of Structures:
   1. Demolish completely and remove from site.
   2. Use such methods as required to complete work within limitations of governing regulations.
   3. Coordinate with Owner and utility suppliers for shut-off of utilities serving each building.
   4. Disconnect and seal utilities before commencement of demolition.

C. Structural Demolition:
   1. Demolish concrete and masonry in small sections.
   2. Perform removal to avoid excessive loads on supporting walls, floors or framing.

D. Existing Utilities to Remain.
   1. Keep in service and protect against damage during demolition.
   2. Do not interrupt existing utilities serving occupied or facilities in use, except as authorized by Owner.
   3. Provide temporary services during interruptions to existing utilities, as acceptable to Owner.

E. Conduct operations to insure minimum interference with roads, walks, entrances, exits, and adjacent facilities.
   1. Do not close or obstruct private drives, walks or other facilities unless approved in writing.
   2. Do not close or obstruct exits from existing facilities or obstruct public thoroughfares and walks without approval of authorities having jurisdiction.
   3. Provide alternate routes around closed or obstructed traffic ways.

F. Provide covered passageways to ensure safe passage of persons in or near areas of work.

G. Provide barricades and safety lights as required.

3.2 PROTECTION OF FACILITIES TO REMAIN

A. Protect Property to Remain:
   1. Conduct operations to prevent damage by falling debris or other cause to adjacent buildings, structures, and other facilities as well as persons.
   2. Provide interior and exterior shoring, bracing, or support to prevent movement, settlement or collapse of structures.

B. Protect occupants from injury and discomfort.

C. Provide temporary dustproof partitions between demolition areas and occupied areas.
   1. In public areas use clean, painted 1/2 IN thick plywood.
   2. Utilize fire rated construction where required by Authorities Having Jurisdiction,.

D. Provide temporary weather protection and insulation to prevent damage to existing facilities and discomfort to persons in occupied areas.

1. Insulation value: RSI 3.5 R 19.

3.3 ITEMS SALVAGED FOR OWNER

A. Remove salvage items at appropriate stage of demolition, but early enough to prevent damage to them by demolition operations:
   1. Coordinate with Owner items Owner wishes to save.

B. Remove salvage items as a unit:
   1. Clean, list, and tag for storage.
   2. Protect from damage.
   3. Salvage each item with auxiliary or associated equipment required for operation.
   4. Store in an area designated within building.

3.4 ITEMS SALVAGED FOR CONTRACTOR

A. Items of salvage value to Contractor may be removed from structure as work progresses.

B. Transport salvaged items from site as they are removed.

C. Storage or sale of removed items not permitted on site.

3.5 CLEAN-UP AND DISPOSAL OF DEMOLITION MATERIALS

A. Remove debris, rubbish, and materials resulting from demolition operations.
   1. Remove and legally dispose of off site.
   2. Do not burn materials on site.

B. Dispose of items and materials not designated for Owner salvage or reuse.
   1. Promptly remove from site.
   2. Do not store or sell Contractor salvaged items or materials on site.

C. Clean adjacent structures and improvements of dust, dirt, and debris caused by demolition operations.

D. Return adjacent areas to condition existing prior to start of work.

END OF SECTION

SECTION 03 08 13
CONCRETE TESTING AND EVALUATION - OWNER

PART 1 - GENERAL

1.1 SUMMARY

A. Furnish all labor, materials, tools, equipment, and services for Concrete Testing and Evaluation - Owner, as indicated, in accordance with provisions of Contract Documents.

B. Completely coordinate with work of other trades.

1.2 QUALITY ASSURANCE

A. Standards:
1. ASTM-C31: Standard Practice for Making and Curing Concrete Test Specimens in Field.
2. ASTM-C42: Standard Test Method for Obtaining and Testing Drilled Cores and Sawed Beams of Concrete.
3. ACI 318: Building Code Requirements for Structural Concrete and Commentary.
4. ASTM-E329: Standard Specification for Agencies Engaged in Construction Inspection and/or Testing.

B. Contractor's testing agency:
1. Qualifications: Acceptable to Architect/Engineer, with evidence of recent inspection by Cement and Concrete Reference Laboratory of National Institute of Standards and Technology and of having corrected deficiencies noted, and meet requirements of ASTM E 329.
2. Authority: Agency and its representatives are not authorized to revoke, alter, relax, enlarge or release any requirement of Contract Documents, nor to approve or accept portion of Work.

1.3 SUBMITTALS

A. Project Information:
1. Contractor's testing agency qualifications.
2. Production sample test reports (when required): Include same data as for mix designs.
3. Reports of Contractor-optional tests.
4. Test reports on in-place testing, if such testing is performed.

PART 2 - PRODUCTS - NOT USED

PART 3 - EXECUTION

3.1 DESCRIPTION - GENERAL

A. Test concrete materials and inspect operations as work progresses. Failure to detect defective work or material shall not prevent later rejection when such defect is discovered nor shall it obligate Architect/Engineer for final acceptance.

B. Payment for testing:
1. Pay for testing services required in paragraph "Responsibilities and Duties of Contractor."

2. Routine testing of concrete furnished to job site for compliance with Contract Documents will be performed by Owner's testing agency at Owner's expense.
   a. Routine testing consists of tests for compressive strength, slump, air, temperature and unit weight.
   b. Tests shall be performed every ~~60 M3~~ 75 YD^3 or 5000 ft² of surface area for slabs and walls, or fraction thereof, for each mixture design placed in one day.
   c. Composite samples shall be obtained in accordance with ASTM-C172. Obtain each sample from a different batch of concrete on a random basis. Test batch shall be selected at random before commencement of concrete placement.
   d. Agency shall mold and cure sufficient specimens from each sample in accordance with ASTM-C31 and report deviations from requirements, if any. Number of specimens molded shall be coordinated with the test specification requirements and construction operations.
   e. Specimens shall be tested in accordance with ASTM-C39.

3.2 RESPONSIBILITIES AND DUTIES OF CONTRACTOR

A. Provide necessary testing services for qualification of proposed materials and establishment of mix designs. Services performed by Contractor's testing agency.

B. Submit concrete materials and concrete mix designs proposed for use. Include results of testing performed to qualify materials and to establish mix designs. Place no concrete until Contractor has received approval in writing. See submittals paragraph.

C. Use of testing service shall in no way relieve Contractor of responsibility to furnish materials and construction in full compliance with Contract Documents.

D. To facilitate testing and inspection:
   1. Furnish labor to assist Owner's testing agency in obtaining and handling samples at site or other sources of materials.
   2. Advise Owner's testing agency sufficiently in advance of operations to allow for completion of routine testing and for assignment of personnel.
   3. Provide and maintain adequate facilities for safe storage and proper curing of concrete compressive strength test specimens on site for first 8 HR or until they gain sufficient strength, as required by ASTM-C31.

E. Pay for following additional testing services to be performed by Owner's testing agency, on occasions indicated:
   1. Additional testing and inspection, whenever changes in materials or proportions are requested by Contractor.
   2. Additional testing of materials or concrete, whenever they fail by test or inspection, to meet specification requirements.
   3. Other testing services needed or required by Contractor, such as:
      a. Additional field cured test specimens as needed for control of work by Contractor such as, when concrete may be stripped, reshored, unshored, post-tensioned, etc.

3.3 EVALUATION AND ACCEPTANCE OF COMPRESSIVE STRENGTH TEST RESULTS

A. Evaluate test results for standard molded and cured test cylinders separately for each concrete mix design. For evaluation of potential strength and uniformity, each mix design shall be represented by at least five tests.

B. Strength level of concrete will be considered acceptable so long as averages of sets of three consecutive strength test results equal or exceed specified strength (f'c) and no individual strength test result falls below specified strength (f'c) by more than 3450 kPa 500 PSI.

3.4 TESTING CONCRETE IN PLACE

A. When compressive strength tests indicate potential strength deficiency of in-place concrete, testing of concrete in place may be required as an aid in evaluating actual strength. If required, Contractor pay for concrete tests and engineering time and analysis required to evaluate actual in-place concrete strength made necessary by deficient strength cylinder tests.

B. Testing by rebound hammer, ultrasonic, or other non-destructive device: Such tests shall be used to determine relative strengths at various locations in structure as an aid for selecting areas to be cored. Such tests, unless properly calibrated and correlated with other test data, will not be used as a basis for acceptance or rejection.

C. Core tests: Obtain and test largest practical diameter cores, ~~50 mm~~ 2 IN minimum, in accordance with ASTM-C42. If concrete in structure will be dry under service conditions, air dry cores temperature ~~16 to 26 degC~~ 60 to 80 degF, relative humidity less than 60 percent for 7 days before test. Test dry. If concrete in structure will be more than superficially wet under service conditions, test cores after moisture conditioning.
   1. Take at least three representative cores from each member or area of concrete in place that is considered potentially deficient in strength. Location will be determined by Architect/Engineer. If, before testing, one or more of cores indicates evidence of having been damaged subsequent to or during removal from structure, replace it.
   2. Concrete in area represented by a core test will be considered acceptable if average strength of cores is equal to at least 85 percent of, and if no single core is less than 75 percent of, specified strength (f'c).
   3. Fill core holes with low slump patching compound per Section 03 35 00.

3.5 ACCEPTANCE OR REJECTION OF CAST-IN-PLACE CONCRETE

A. General:
   1. Completed concrete work which conforms to applicable requirements of Contract Documents will be accepted without qualification.
   2. Concrete work which fails to conform to one or more requirements of Contract Documents shall be rejected and will not be accepted until repaired or proven adequate by concrete testing.
   3. Contractor pays costs incurred in providing remedial work necessary to change rejected work to accepted work. Remedial work includes, but is not necessarily limited to, applicable repairs, replacement, reinforcement, engineering, and testing as denoted in following paragraphs.

B. Dimensional tolerances:
   1. Formed surfaces resulting in concrete outlines smaller than permitted by tolerances shall be considered potentially deficient in strength and subject to confirmation of safety by structural analysis or load test. When deficiencies are confirmed, replace or reinforce structure as directed.
   2. Formed surfaces resulting in concrete outlines larger than permitted by tolerances will be rejected if strength or finish of structure is not acceptable, or function is adversely affected. Otherwise members will be accepted. If surfaces are rejected, and removal of excess material is permitted, repair of surfaces in an approved manner will constitute acceptance. If surfaces are rejected, and removal of excess material is not permitted, replacement of member(s) in an approved manner will constitute acceptance.
   3. Concrete member(s) cast in wrong location will be rejected if strength or finish is not acceptable, function is adversely affected or they interfere with other construction. Otherwise, member(s) will be accepted. If they are rejected, replacement of member(s) in an approved manner and in conformance with Contract Documents will constitute acceptance.
   4. Inaccurately formed concrete surfaces exceeding limits of tolerances and which are exposed to view will be rejected. Repair of surfaces or replacement of member(s) in an approved manner and in conformance with Contract Documents will constitute acceptance.

C. Finish:
   1. Slabs:
      a. Finished slabs exceeding tolerance limits of Section 03 35 00 will be rejected if finish is not acceptable and function is adversely affected. If rejected, repair of finished surfaces or replacement of slab in an approved manner and in conformance with Contract Documents will constitute acceptance.
      b. Repair may involve removing high spots with a terrazzo grinder, filling low spots with a patching compound, or other remedial measures as permitted.
   2. Formed surfaces:
      a. Concrete exposed to view with defects which adversely affect appearance of specified finish will be rejected. Repair of surface defects in conformance with Section 03 35 00 will constitute acceptance.
      b. Concrete not exposed to view is not subject to rejection for defective finish.

D. Strength of structure:
   1. Strength of structure in place will be considered potentially deficient and will be rejected if it fails to comply with requirements which control strength of structure, including but not necessarily limited to following:
      a. Deficient concrete strength based on compressive strength tests.
      b. Reinforcing steel size, quantity, strength, position, or arrangement at variance with requirements on reinforcement.
      c. Concrete which differs from required dimensions or location in such a manner as to reduce strength.
      d. Curing less than that specified, likely to result in deficient concrete strength.
      e. Inadequate protection of concrete from extremes of temperature during early stages of hardening and strength development.
      f. Mechanical injury, construction fires, accidents or premature removal of formwork likely to result in deficient strength.
      g. Substandard workmanship likely to result in deficient strength.
   2. When strength of structure is considered potentially deficient and is rejected, it will not be accepted until one of following remedies is completed. All proposed fixes to repair deficient concrete should be submitted by Contractor to Engineer for review and approval prior to any action by Contractor.
      a. Confirmation of safety of structure by structural analysis.
      b. Core tests shall be performed only when concrete strength is potentially deficient, and when safety of structure is not confirmed by structural analysis. Do not use if impractical to obtain or not feasible.
      c. Confirmation of safety of structure by load tests performed and evaluated in accordance with ACI 318. Do not use if impractical to perform or not feasible.
      d. Replacement of structure deficient in strength.
      e. Subject to functional feasibility and Owner's approval, structure deficient in strength may be reinforced with supplement supports as directed by Architect.

PART 4 - MEASUREMENT AND PAYMENT

A. Refer to Section 01 22 00, Part 4, regarding measure and payment.

B. Work of this Section is considered incidental to work under other payment items and no separate measurement and payment will be made to the Contractor for Work of this Section. Work of this section shall include furnishing all labor, materials, tools, equipment, supplies, supervision, and incidentals necessary ~~for Finish Hardware~~ as described by the Contract Documents.

END OF SECTION

SECTION 03 11 00
CONCRETE FORMWORK

PART 1- GENERAL

1.1 SUMMARY

A. Furnish all labor, materials, tools, equipment, and services for Concrete Formwork, as indicated, in accordance with provisions of Contract Documents.

B. Completely coordinate with work of other trades.

1.2 QUALITY ASSURANCE

A. Design, engineering, and construction of formwork are responsibility of Contractor.
   1. Design, engineer, and construct formwork for applicable gravity and lateral loads and pressures as well as other design considerations or applicable requirements of legal local building code.
   2. Develop shoring and re-shoring pattern and sequence so as not to exceed safe structural capacity of supporting structural systems. Confer with Architect, if there is any question, regarding the capacity of the structural system.

B. Design, prepare formwork drawings and construct formwork in accordance with ACI 347, Guide to Formwork for Concrete.

C. Layout and measurement of concrete forms and embedment's, required for work, performed by a licensed surveyor employed by the contractor.

1.3 SUBMITTALS

1.4 DESCRIPTION

A. Definition(s):
   1. Formwork: Total system of support for freshly placed concrete including mold or sheathing which contacts concrete as well as supporting members, hardware, and necessary bracing.
   2. Exposed construction: Exposed to view.
   3. Exposed to view: Concrete surfaces seen by the public from eye level from any walking surface in a public location after completion of building.
   4. Public location: Building areas accessible to public and employees not responsible for maintenance. Storerooms, unfinished space and large mechanical rooms are considered public locations. Equipment closets, elevator and mechanical penthouses are not public space.

B. Use forms, wherever necessary, to confine concrete and shape it to required dimensions. Use forms of sufficient strength to withstand pressure resulting from placement and vibration of concrete, with sufficient rigidity to maintain specified tolerances.

C. See concrete finish requirements in Section 03 35 00.

D. Use earth side forms for spread footings, pile caps and unfinished grade beams where earth can be shaped to a straight and true surface. Do not use earth cuts as forms for other vertical surfaces unless permitted.

PART 2 - MATERIALS

2.1 MATERIALS

A. Form facing materials: As indicated under description of finishes required.

B. Form accessories, partially or wholly embedded in concrete, such as ties and hangers: Shall be of a commercially manufactured type. Do not use non-fabricated wire. Use form ties constructed so ends or end fasteners can be removed without causing appreciable spalling of concrete faces. After ends or end fasteners of form ties have been removed, embedded portion of ties shall terminate not less than 2 diameters or twice minimum dimension of tie from formed faces of concrete to be permanently exposed to view, but in no case less than 3/4 IN. When formed face of concrete is not to be permanently exposed to view, form ties may be cut off flush with formed surfaces. Use ties with 3/4 IN diameter cones on both ends.

2.2 FABRICATION OF FORMS

A. Make forms sufficiently tight to prevent loss of cement fines. Place chamfer strips in outside corners of forms to produce 45 degree beveled corners on permanently exposed surfaces. Interior corners on such surfaces and edges of formed joints will not require beveling.

B. To maintain specified finish tolerances, camber formwork to compensate for anticipated formwork deflections prior to hardening of concrete.

C. Provide positive means of adjustment (wedges or jacks) of shores and struts and take up settlement during concrete placing operation. Securely brace forms against lateral deflection.

D. Provide temporary openings at base of column and wall forms and at other points where necessary to facilitate cleaning and observation immediately before concrete is placed.

E. At construction joints, contact surface of form sheathing for flush surfaces exposed to view shall overlap hardened concrete in previous placement minimum 1 IN. Hold forms against hardened concrete to prevent offsets or loss of mortar at construction joint and to maintain a true surface.

F. Construct wood forms for wall openings to facilitate loosening, if necessary, to counteract swelling.

G. Fasten wedges (used for final adjustment of forms prior to concrete placement) in position after final check.

H. Anchor formwork to shores or other supporting surfaces or members so upward or lateral movement of any part of formwork system is prevented during concrete placement.

I. Provide runways for moving equipment with struts or legs, supported directly on formwork or structural member without resting on reinforcing steel.

2.3 TOLERANCES

A. Construct formwork so concrete surfaces will conform to tolerance limits listed: Tolerances non-cumulative. Most restrictive tolerance governs. Tolerance limits noted are maximum deviations (plus or minus) on each side of intended line.
   1. Deviation from plumb:
      a. In lines and surfaces of columns, piers, walls, and in arrises:
         1) In any length: 1 in 500 but not less than 1/8 IN.
         2) In any story: 3/8 IN.
         3) Maximum for entire length: 3/4 IN.
      b. For exposed corner columns, control-joint grooves, and other conspicuous vertical lines:
         1) In any length: 1 in 1000 but not less than 1/8 IN.

        2) In any story: 3/16 IN.
        3) Maximum for entire length: 1/2 IN.
    2. Deviation from level or from grades specified:
        a. In slab soffits, ceilings, beam soffits and in arrises, measured before removal of supporting shores:
            1) In any length: 1 in 750 but not less than 1/8 IN.
            2) In any bay: 3/8 IN.
            3) Maximum for entire length: 1/2 IN.
        b. In exposed lintels, sills, parapets, horizontal grooves, and other conspicuous horizontal lines:
            1) In any length: 1 in 1000, but not less than 1/8 IN.
            2) In any bay: 1/4 IN.
            3) Maximum for entire length: 1/2 IN.
    3. Deviations from true plane of concrete surface exposed to view caused by bulging of form facing material between supports:
        a. 3/16 IN or l/300 of span between supports whichever is smaller.
    4. Deviation from established position in plan of linear building lines, columns, walls:
        a. In any length: 1 in 500, but not less than 1/8 IN.
        b. In any bay: 1/2 IN.
        c. Maximum for entire length: 3/4 IN.
    5. Deviation in sizes and location of sleeves, floor openings, and wall openings: 1/4 IN.
    6. Deviation in cross-sectional dimensions of columns and beams and in thickness of slabs and walls:
        a. Minus: 1/4 IN.
        b. Plus: 1/2 IN.
    7. Footings:
        a. Deviations in dimensions in plan:
            1) Minus: 1/2 IN.
            2) Plus: 2 IN.
        b. Misplacement or eccentricity:
            1) 2 percent of footing width in direction of misplacement but not more than 2 IN.
        c. Thickness:
            1) Decrease in specified thickness: 5 percent.
            2) Increase in specified thickness: No limit (except that which may interfere with other construction).
    8. Deviation in steps:
        a. In flight of stairs:
            1) Rise: 1/8 IN.
            2) Tread: 1/4 IN.
        b. In consecutive steps:
            1) Rise: 1/16 IN.
            2) Tread: 1/8 IN.
        c. Deviation from level for any step or landing: 1 in 1000 but not more than 1/8 IN.

B. Formwork Classifications:
    1. Concrete formwork shall meet the following classification requirements:
        a. Concrete noted as “Architectural Exposed Concrete": Class A.
        b. Concrete exposed to view or to receive membrane waterproofing: Class B.
        c. Footings: Class D.
        d. All other concrete: Class C.

C. Tolerances apply to concrete dimensions only, not to positioning of vertical reinforcing steel, dowels, or embedded items, except where specifically noted otherwise.

D. Establish and maintain in undisturbed condition and until final completion of project, sufficient control points and bench marks to be used for reference purposes to check tolerances.

E. Regardless of tolerances listed allow no portion of building to extend beyond property line of project.

PART 3 - EXECUTION

3.1 PREPARATION OF FORM SURFACES

A. Clean form surfaces and embedded materials of mortar, grout and foreign material before concrete is placed.

B. Unless otherwise specified or approved, treat surfaces of forms as follows:
   1. Before placing of reinforcing steel or concrete, cover surfaces of forms with coating material that will effectively prevent absorption of moisture and prevent bond with concrete, and not stain concrete. A field applied form release agent or sealer or factory applied non-absorptive liner may be used.
   2. Do not allow excess form coating material to stand in puddles in forms nor in contact with hardened concrete against which fresh concrete is to be placed.

3.2 REMOVAL OF FORMS

A. When repair of surface defects or finishing is required at early age, remove forms as soon as concrete has hardened sufficiently to resist damage from removal operations.

B. Remove top forms on sloping surfaces of concrete as soon as concrete has attained sufficient stiffness to prevent sagging. Perform needed repairs or treatment required on such sloping surfaces at once, followed by specified curing.

C. Loosen wood forms for wall openings as soon as this can be accomplished without damage to concrete.

D. Formwork for columns, walls, sides of beams, and other parts not supporting weight of concrete may be removed as soon as concrete has hardened sufficiently to resist damage from removal.

E. Where no re-shoring is planned, leave forms and shoring used to support weight of concrete in beams, slabs and other concrete members in place until concrete has attained its specified strength. Where re-shoring is planned, supporting formwork may be removed when concrete has reached 70 percent of specified strength, provided re-shoring is installed immediately.

F. When shores and other vertical supports are arranged so non-load-carrying form-facing material may be removed without loosening or disturbing shores and supports, facing material may be removed at earlier age as permitted.

3.3 RE-SHORING

A. When re-shoring is permitted or required, plan operations in advance. While re-shoring is underway, allow no live load on new construction.

B. During re-shoring do not subject concrete in beam, slab, column or other structural member to combined dead and construction loads in excess of loads permitted by Architect for developed concrete strength at time of re-shoring. Place re-shores as soon as practicable after stripping operations are complete but in no case later than end of working day on which stripping occurs. Tighten re-shores to carry required loads without overstressing construction. Leave re-shores in place until:
   1. Tests representative of concrete being supported have reached specified strength.
   2. In-place concrete is at least 7 days old.
   3. Loads imposed by construction operations do not exceed design loads.

C. For floors supporting shores under newly placed concrete leave original supporting shores in place or re-shore. Re-shoring system shall have capacity sufficient to resist anticipated loads and equal to at least one half of capacity of shoring system above. Locate re-shores directly under shore position above unless otherwise permitted.

D. In multi-story buildings extend re-shoring over sufficient number of stories to distribute weight of newly placed concrete, forms, and construction live loads in such a manner that capacity of floors as determined by design load and developed concrete strength at time of stripping and re-shoring is not exceeded.

3.4 REMOVAL STRENGTH

A. When removal of formwork or re-shoring is based on concrete reaching specified strength, concrete shall be presumed to have reached this strength when either of following conditions has been met.
   1. When test cylinders, field cured along with concrete they represent, have reached specified strength.
   2. When concrete has been cured as specified for same length of time as age at test date of laboratory-cured cylinders which reached specified strength. Determine length of time concrete has been cured in structure by cumulative number of days or fractions thereof, not necessarily consecutive, during which temperature of air in contact with concrete is above 50 degF and concrete has been damp or sealed from evaporation and loss of moisture.

PART 4 - MEASUREMENT AND PAYMENT

A. Refer to Section 01 22 00, Part 4, regarding measure and payment.

B. Work of this Section is considered incidental to work under other payment items and no separate measurement and payment will be made to the Contractor for Work of this Section. Work of this section shall include furnishing all labor, materials, tools, equipment, supplies, supervision, and incidentals necessary as described by the Contract Documents.

END OF SECTION

This page intentionally left blank.

SECTION 03 18 13
CONCRETE SURFACE SEALER (EXTERIOR)

PART 1 - GENERAL

1.1 SUMMARY

A. Furnish labor, materials, tools, equipment, and services for Concrete Surface Sealer, as indicated, in accordance with provisions of Contract Documents.

B. Completely coordinate with work of other trades.

1.2 QUALITY ASSURANCE

A. Applicator qualifications: Licensee of manufacturer, or approved by manufacturer in writing.

B. Minimum standards:
   1. Sealers proposed for use on this project shall be certified by the manufacturer to contain not less than a 40 percent active ingredient.
      a. Silane or silane-siloxane blend.

C. Coverage:
   1. Apply to the heaviest rate allowed by manufacturer of the product to be used.

1.3 SUBMITTALS

A. Project Information:
   1. Application instructions including:
      a. Surface preparation.
      b. Anticipated application rates.
      c. Method of assuring uniform application.
      d. Environmental considerations and necessary precautions for workmen and property.
      e. Surface preparation necessary for reapplication after warranty period.

B. Contract Closeout Information:
   1. Warranty.

PART 2 - PRODUCTS

2.1 ACCEPTABLE MANUFACTURERS

A. Concrete surface sealer:
   1. Base:
      a. L&M Construction Chemicals.
   2. Optional:
      a. Nox-Crete Chemicals.
      b. ProSoCo.
      c. Chemprobe Coatings Systems.
      d. Zerovoc Technologies.

B. Other manufacturers desiring approval comply with Section 00 26 00.

2.2 MATERIALS

A. Concrete Surface Sealer:
   1. Clear, colorless, non-filming and fully penetrating material.

2. Products:
   a. Aquapel+Plus by L&M Construction Chemicals,
   b. Dur A Pell 40 by Chemprobe.
   c. SL40 by ProSoCo.
   d. ZLi71 by Sealwize.
   e. Enviroseal Seal 20 by BASF
   f. Dur A Pell 20 by Chemprobe.
   g. Aquapel by L&M Construction Chemicals.

PART 3 - EXECUTION

3.1 INSPECTION

A. Manufacturer inspect and approve surface preparation prior to application of sealer.

3.2 JOB CONDITIONS

A. Install joint sealants prior to installing sealer.

B. Clean surfaces to be sealed of construction and traffic residues.

C. Install only when ambient temperatures and moisture content of concrete surfaces is acceptable to sealer manufacturer.

D. Apply this repellant coating and allow adequate cure time before painting parking stripes.

E. Manufacturer inspect and approve surface preparation prior to application of sealer.

F. Manufacturer monitor and approve applicator's method and rate of applying sealer.

G. Coordinate surface sealer application so as to not interfere with installation and adhesion of sealants or flooring.

3.3 CLEANING

A. Broom clean surfaces after completion of work.

PART 4 - MEASUREMENT AND PAYMENT

A. Refer to Section 01 22 00, Part 4, regarding measure and payment.

B. Work of this Section is considered incidental to work under other payment items and no separate measurement and payment will be made to the Contractor for Work of this Section. Work of this section shall include furnishing all labor, materials, tools, equipment, supplies, supervision, and incidentals necessary as described by the Contract Documents.

END OF SECTION

SECTION 03 21 00
REINFORCING STEEL

PART 1 - GENERAL

1.1 SUMMARY

A. Section Includes:
   1. Reinforcing bar requirements for concrete construction.

B. Related Specification Sections include but are not necessarily limited to:
   1. Division 00 - Bidding Requirements, Contract Forms, and Conditions of the Contract.
   2. Division 01 - General Requirements.

1.2 REFERENCES

A. American Concrete Institute (ACI):
   1. SP 66, ACI Detailing Manual.
   2. 318, Building Code Requirements for Structural Concrete.

B. ASTM International (ASTM):
   1. A185, Standard Specification for Steel Welded Wire Reinforcement, Plain, for Concrete.
   2. A497, Standard Specification for Steel Welded Wire Reinforcement, Deformed, for Concrete.
   3. A615, Standard Specification for Deformed and Plain Carbon-Steel Bars for Concrete Reinforcement.
   4. A706, Standard Specification for Low-Alloy Steel Deformed and Plain Bars for Concrete Reinforcement.
   5. A775, Standard Specification for Epoxy-Coated Steel Reinforcing Bars.

C. American Welding Society (AWS):
   1. D1.4, Structural Welding Code - Reinforcing Steel.

D. Concrete Reinforcing Steel Institute (CRSI):
   1. Manual of Standard Practice.
   2. California Department of Transportation Standard Specifications (2006).

1.3 SUBMITTALS

A. Shop Drawings:
   1. See Division 01 for requirements for the mechanics and administration of the submittal process.
   2. Product technical data including:
      a. Acknowledgement that products submitted meet requirements of standards referenced.
      b. Manufacturer's installation instructions.
      c. Mill certificates for all reinforcing.
      d. Manufacturer and type of proprietary rebar mechanical splices.
      e. Manufacturer and type of rebar adhesive anchor including installation instructions.
   3. Qualifications of welding operators, welding processes and procedures.
   4. Rebar number, sizes, spacing, dimensions, configurations, locations, mark numbers, lap splice lengths and locations, concrete cover and rebar supports.
   5. Sufficient rebar details to permit installation of reinforcing.
   6. Rebar details in accordance with ACI SP 66.
   7. Locations where proprietary rebar mechanical splices are required or proposed for use.
   8. Shop Drawings shall be in sufficient detail to permit installation of reinforcing without reference to Contract Plans.

a. Shop Drawings shall not be prepared by reproducing the plans and details indicated on the Contract Plans but shall consist of completely redrawn plans and details as necessary to indicate complete fabrication and installation of all reinforcing steel.

1.4 QUALITY ASSURANCE

A. Qualifications:
   1. Welding operators, processes and procedures shall be qualified in accordance with AWS D1.4.
   2. Welding operators must have been qualified during the previous 12 months prior to commencement of welding.

1.5 DELIVERY, STORAGE, AND HANDLING

A. Support and store all reinforcing above ground.

B. Ship to jobsite with attached plastic or metal tags with permanent mark numbers which match the Shop Drawing mark numbers.

C. Handling of Epoxy-Coated Rebar:
   1. Use padded or nonmetallic slings and padded straps to protect coated reinforcement from damage.
   2. Handle bundled bars to prevent sagging that could damage the coating.
   3. Do not drop or drag rebars.
   4. Store on wooden cribbing.
   5. Coated rebars subject to rejection by Engineer if rebar coating has been damaged.

PART 2 - PRODUCTS

2.1 ACCEPTABLE MANUFACTURES

A. Subject to compliance with the Contract Documents, the following manufacturers are acceptable:
   1. Rebar adhesive anchors:
      a. HIT-HY150 System by HILTI FASTENING SYSTEMS, INC.
      b. Epcon Adhesive Anchoring System by ITW Ramset/Red Head.
      c. Power-Fast by Powers Fastening, Inc.
   2. Rebar mechanical splices:
      a. Lenton Rebar Splicing by Erico, Inc.
      b. Richmond dowel bar splicer system by Richmond Screw and Anchor Co., Inc.
      c. Bar-Grip Systems by Barsplice Products, Inc.

B. Submit request for substitution in accordance with Division 01.

2.2 MATERIALS

A. Reinforcing Bars: ASTM A615, grade 60, deformed.

B. Reinforcing Bars to be Welded: ASTM A706.

C. Welded Wire Reinforcement: ASTM A185 or ASTM A497.

D. Smooth Dowel Bars: ASTM A615, grade 60 with metal end cap to allow longitudinal movement equal to joint width plus 1 inch.

E. Epoxy-Coated Rebars: ASTM A775 and ASTM A615, Grade 60, meeting Annex A1 for epoxy coating.

F. Epoxy-Coated Rebar Patching Material:
   1. Compatible with the coating material.
   2. Inert in concrete.
   3. Meet requirements of Annex A1 of ASTM A775.
   4. Obtained from the manufacturer of the epoxy resin that was used to originally coat the rebars.

G. Proprietary Rebar Mechanical Splices: To develop in tension and compression a minimum of 125 percent of the yield strength of the rebars being spliced.

H. Welding Electrodes:
   1. E90 meeting requirements of AWS D1.4.

I. Rebar Adhesive Anchors:
   1. Manufactured for the specific purpose of embedding and developing 125 percent of the yield strength of rebars in hardened concrete.

2.3 ACCESSORIES

A. Metal Chairs, Runners, Bolsters, Spacers, Hangers, and Other Rebar Supports:
   1. Plastic-coated tips in contact with forms.
   2. Plastic coating meeting requirements of CRSI Manual of Standard Practice.

B. Protective plastic caps at mechanical splices.

2.4 FABRICATION

A. Tolerances:
   1. Sheared lengths: +1 IN.
   2. Overall dimensions of stirrups, ties and spirals: +1/2 IN.
   3. All other bends: +0 IN, -1/2 IN.

B. Minimum diameter of bends measured on the inside of the rebar to be as indicated in ACI 318 Paragraph 7.2.

C. Ship rebars to jobsite with attached plastic or metal tags.
   1. Place on each tag the mark number of the rebar corresponding to the mark number indicated on the Shop Drawing.
   2. Mark numbers on tags to be so placed that the numbers cannot be removed.
   3. For epoxy-coated rebars, use only plastic tags secured to rebars by nylon or plastic ties.

PART 3 - EXECUTION

3.1 INSTALLATION

A. Tolerances:
   1. Rebar placement:
      a. Clear distance to formed surfaces: +1/4 IN.
      b. Minimum spacing between bars: -1/4 IN.
      c. Top bars in slabs and beams:
         1) Members 8 IN deep or less: +1/4 IN.
         2) Members between 8 IN and 2 FT deep: -1/4 IN, +1/2 IN.
         3) Members more than 2 FT deep: -1/4 IN, +1 IN.
      d. Crosswise of members: Spaced evenly within +1 IN.
      e. Lengthwise of members: +2 IN.
   2. Minimum clear distances between rebars:
      a. Beams, walls and slabs: Distance equal to rebar diameter or 1 IN, whichever is greater.
      b. Columns: Distance equal to 1-1/2 times the rebar diameter or 1-1/2 IN, whichever is greater.
      c. Beam and slab rebars shall be threaded through the column vertical rebars without displacing the column vertical rebars and still maintaining the clear distances required for the beam and slab rebars.

B. Minimum concrete protective covering for reinforcement: As shown on Plans.

C. Minimum concrete protective covering for reinforcement, unless indicated otherwise on Plans:

1. 3 IN for concrete cast against earth, 2 IN all other locations.

D. Unless indicated otherwise on Plans, provide splice lengths for reinforcing as follows:
   1. For rebars: Class B splice meeting the requirements of Paragraph 12.15 of ACI 318.
   2. For welded wire reinforcement:
      a. Splice lap length measured between outermost cross wires of each fabric sheet shall not be less than one (1) spacing of cross wires plus 2 IN, nor less than 1.5 x development length nor less than 6 IN.
      b. Development length shall be as required for the yield strength of the welded wire reinforcement in accordance with Paragraph 12.8 of ACI 318.
   3. Provide splices of reinforcing not specifically indicated or specified subject to approval of Engineer.
      a. Mechanical proprietary splice connectors may only be used when approved or indicated on the Contract Plans.

E. Reinforcing Steel Splices:
   1. Splices of reinforcing bars shall consist of lap splices, service splices, or ultimate butt splices.
   2. Splicing of reinforcing bars will not be permitted at a location designated on the plans as a "No-Splice Zone."
   3. At the option of the Contractor, reinforcing bars may be continuous at locations where splices are shown on the Plans.
   4. The location of splices, except where shown on the plans, shall be determined by the Contractor using available commercial lengths where practicable.
   5. Unless otherwise shown on the plans, splices in adjacent reinforcing bars at any particular section shall be staggered.
      a. The minimum distance between staggered lap splices or mechanical lap splices shall be the same as the length required for a lap splice in the largest bar.
      b. The minimum distance between staggered butt splices shall be 2 FT, measured between the midpoints of the splices along a line which is centered between the axes of the adjacent bars.
   6. Lap Splicing Requirements:
      a. Splices made by lapping shall consist of placing reinforcing bars in contact and wiring them together, maintaining the alignment of the bars and the minimum clearances.
      b. Should the Contractor elect to use a butt welded or mechanical splice at a location not designated on the plans as requiring a service or ultimate butt splice, this splice shall conform to the testing requirements for service splice.
      c. Reinforcing bars shall not be spliced by lapping at locations where the concrete section is not sufficient to provide a minimum clear distance of 2 IN between the splice and the nearest adjacent bar.
      d. The clearance to the surface of the concrete specified on the Plans shall not be reduced.
   7. Service Splicing and Ultimate Butt Splicing Requirements:
      a. Service splices and ultimate butt splices shall be either butt welded or mechanical splices, shall be used at the locations shown on the plans, and shall conform to the requirements of these Specifications and the Plans.
   8. Mechanical Splices:
      a. Mechanical splices shall not be used for any reinforcing steel in the “Ultimate Splice Zone” as indicated on the Plans.
      b. Any mechanical splices proposed by the Contractor shall be submitted for review and approval by the Engineer prior to reinforcing steel fabrication.
      c. Only mechanical splices prequalified by the Transportation Laboratory of the California Department of Transportation shall be allowed.
      d. Submittal of proposed mechanical splices shall include:
         1) The type or series identification of the splice material including tracking information for traceability.
         2) The bar grade and size number to be spliced.
         3) A copy of the manufacturer's product literature giving complete data on the splice material and installation procedures.

4) A statement that the splicing systems and materials used in conformance with the manufacturer's installation procedures will develop the required tensile strengths, based on the nominal bar area, and will conform to the total slip requirements and the other requirements in the California Department of Transportation Standard Specifications.
5) A statement that the splice material conforms to the type of mechanical splice in the California Department of Transportation current prequalified list.

9. Butt Welded Splices:
   a. Except for resistance butt welds, butt welded splices of reinforcing bars shall be complete joint penetration butt welds conforming to the requirements in AWS D 1.4, and these Specifications.
   b. Welders and welding procedures shall be qualified in conformance with the requirements in AWS D 1.4.
   c. Only the joint details and dimensions as shown in Figure 3.2, "Direct Butt Joints," of AWS D 1.4, shall be used for making complete joint penetration butt welds of bar reinforcement.
      1) Split pipe backing shall not be used.
   d. Butt welds shall be made with multiple weld passes using a stringer bead without an appreciable weaving motion.
      1) The maximum stringer bead width shall be 2.5 times the diameter of the electrode and slagging shall be performed between each weld pass.
      2) Weld reinforcement shall not exceed 0.16 IN in convexity.
   e. Electrodes used for welding shall meet the minimum Charpy V-notch impact requirement of 27°J at -4 degrees.
   f. All bars to be welded shall conform to the requirements of ASTM A706.
   g. In the event that any of the specified preheat, interpass, and post weld cooling temperatures are not met, all weld and heat affected zone metal shall be removed and the splice rewelded.
   h. Welding shall be protected from air currents, drafts, and precipitation to prevent loss of heat or loss of arc shielding.
      1) The method of protecting the welding area from loss of heat or loss of arc shielding shall be subject to approval by the Engineer.
   i. Reinforcing bars shall not be direct butt spliced by thermite welding.
   j. Procedures to be used in making welded splices in reinforcing bars, and welders employed to make splices in reinforcing bars, shall be qualified by tests performed by the Contractor on sample splices of the type to be used, before making splices to be used in the work.
10. Resistance Butt Welding:
   a. Shop produced resistance butt welds shall be produced by a fabricator who is approved by the Transportation Laboratory of the California Department of Transportation.
   b. Before manufacturing hoops using resistance butt welding, the Contractor shall submit to the Engineer the manufacturer's Quality Control (QC) manual for the fabrication of hoops.
      1) As a minimum, the QC manual shall include the following:
         a) The pre-production procedures for the qualification of material and equipment.
         b) The methods and frequencies for performing QC procedures during production.
         c) The calibration procedures and calibration frequency for all equipment.
         d) The Welding Procedure Specification (WPS) for resistance welding.
         e) The method for identifying and tracking lots.
11. Service Splice and Ultimate Butt Splice Testing Requirement:
   a. Testing and reporting of test results for Service and Ultimate Butt Splices shall conform to the California Department of Transportation Standard Specification, Section 52 Reinforcement.

F. Placing Rebars:
   1. Assure that reinforcement at time concrete is placed is free of mud, oil or other materials that may affect or reduce bond.
   2. Reinforcement with rust, mill scale or a combination of both will be accepted as being satisfactory without cleaning or brushing provided dimensions and weights including heights of deformations on a cleaned sample is not less than required by applicable ASTM specification that governs for the rebar supplied.

3. Rebar support:
    a. Uncoated rebar:
        1) Support rebars and fasten together to prevent displacement by construction loads or placing of concrete.
            a) Locate and support reinforcement with bar supports to maintain minimum concrete cover.
            b) Set wire ties with ends directed into concrete, not toward exposed concrete surfaces.
        2) On ground, provide supporting concrete blocks or metal bar supports with bottom plate.
            a) Do not use concrete blocks to support slab-on-grade reinforcing.
        3) Over formwork, provide plastic-coated metal chairs, runners, bolsters, spacers, hangers and other rebar support.
            a) Only tips in contact with the forms need to be plastic coated.
    b. Coated rebar:
        1) Support coated rebars and fasten together to prevent displacement.
        2) Use plastic or nylon ties to hold rebars rigidly in place.
        3) Support rebars by use of plastic or plastic-coated chairs, runners, bolsters, spacers, hangers and rebar supports as required.
4. Support rebars over cardboard void forms by means of concrete supports which will not puncture or damage the void forms during construction nor impair the strength of the concrete members in any way.
5. Where parallel horizontal reinforcement in beams is indicated to be placed in two or more layers, rebars in the upper layers shall be placed directly above rebars in the bottom layer with clear distance between layers to be 1 IN.
    a. Place spacer rebars at 3 FT maximum centers to maintain the required 1 inches clear distance between layers.
6. Extend reinforcement to within 2 IN of concrete perimeter edges.
    a. If perimeter edge is formed by earth, extend reinforcement to within 3 IN of the edge.
7. To assure proper placement, furnish templates for all column/pier vertical bars and dowels.
8. Do not bend reinforcement after embedding in hardened concrete unless approved by Engineer.
    a. Do not bend reinforcing by means of heat.
9. Do not tack weld reinforcing.
10. Embed rebars into hardened concrete utilizing adhesive anchor system specifically manufactured for such installation:
    a. Drill hole in concrete with diameter and depth as required to develop 125 percent of the yield strength of the bar according to manufacturer's requirements.
    b. Clean holes per manufacturer's recommendations.
    c. Place adhesive in drilled hole.
    d. Insert rebar into hole and adhesive in accordance with manufacturer's instructions.

3.2 FIELD QUALITY CONTROL

A. Reinforcement Congestion and Interferences:
    1. Notify Engineer whenever the specified clearances between rebars cannot be met.
    2. Do not place any concrete until the Engineer submits a solution to rebar congestion problem.
    3. Rebars may be moved as necessary to avoid interference with other reinforcing steel, conduits, or embedded items.
    4. If rebars are moved more than one bar diameter, obtain Engineer's approval of resulting arrangement of rebars.
    5. No cutting of rebars shall be done without written approval of Engineer.

B. Inspection of Epoxy-Coated Rebars:
    1. Coated rebars will be inspected on the jobsite for handling defects, coating abrasion, coating thickness and continuity of coating.
    2. Engineer may defer final inspection of rebar coating integrity and repairs until the rebars have been erected and all handling is completed.

3. Repair coated areas as directed by Engineer.
   a. Do not place concrete until all repairs to coatings have been completed.

C. Patching of Epoxy-Coated Rebar:
   1. Patching and repair to be performed in accordance with the instructions of patching material manufacturer.
   2. Patching material to provide a minimum film thickness of 5 mils over the bare area.
      a. Thickness of area adjacent to patched area not to exceed 15 mils.
   3. Areas to be patched to be clean and free of surface contaminants.
      a. Treat areas in accordance with patching material manufacturer's instructions before oxidation occurs.
   4. Total surface area covered by patching material not to exceed 2 percent of total surface area of the rebar.
   5. Rebar welds and adjacent bare rebar areas to also be patched after welding is completed.

D. Employ a testing laboratory to perform and report following:
   1. Review and approve Contractor proposed welding procedures and processes for conformance with AWS D1.4.
   2. Qualify welders in accord with AWS D1.4.
   3. Test three (3) samples of each bar size and each type of weld in accord with AWS D1.4.
      a. The tensile strength of each test shall be not less than 125 percent of the required yield strength of the rebar tested.
   4. Conduct nondestructive field tests (radiographic or magnetic particle) on not less than one (1) random sample for each 10 welds.
      a. In addition if any welds are found defective, test five (5) previous welds performed by same welder.
   5. Visually inspect each weld for presence of cracks, undercuts, inadequate size and other visible defects.

PART 4 - MEASUREMENT AND PAYMENT

A. Refer to Section 01 22 00, Part 4, regarding measure and payment.

B. Work of this Section is considered incidental to work under other payment items and no separate measurement and payment will be made to the Contractor for Work of this Section. Work of this section shall include furnishing all labor, materials, tools, equipment, supplies, supervision, and incidentals necessary as described by the Contract Documents.

END OF SECTION

This section intentionally left blank.

SECTION 03 31 00
CONCRETE MATERIALS AND PROPORTIONING

PART 1 - GENERAL

1.1 SUMMARY

A. Furnish labor, materials, tools, equipment, and services for Concrete Materials and Proportioning, as indicated, in accordance with provisions of Contract Documents.

B. Completely coordinate with work of other trades.

1.2 QUALITY ASSURANCE

A. ASTM International (ASTM):
1. ASTM C33 Standard Specification for Concrete Aggregates
2. ASTM C39 Standard Test Method for Compressive Strength of Cylindrical Concrete Specimens
3. ASTM C94 Standard Specification for Ready-Mixed Concrete
4. ASTM C138 Standard Test Method for Density (Unit Weight), Yield, and Air Content (Gravimetric) of Concrete
5. ASTM C143 Standard Test Method for Slump of Hydraulic-Cement Concrete
6. ASTM C150 Standard Specification for Portland Cement
7. ASTM C157 Standard Test Method for Length Change of Hardened Hydraulic-Cement Mortar and Concrete
8. ASTM C173 Standard Test Method for Air Content of Freshly Mixed Concrete by the Volumetric Method
9. ASTM C192 Standard Practice for Making and Curing Concrete Test Specimens in the Laboratory
10. ASTM C231 Standard Test Method for Air Content of Freshly Mixed Concrete by the Pressure Method
11. ASTM C260 Standard Specification for Air-Entraining Admixtures for Concrete
12. ASTM C311 Standard Test Methods for Sampling and Testing Fly Ash or Natural Pozzolans for Use in Portland-Cement Concrete
13. ASTM C330 Standard Specification for Lightweight Aggregates for Structural Concrete
14. ASTM C496 Standard Test Method for Splitting Tensile Strength of Cylindrical Concrete Specimens
15. ASTM C567 Standard Test Method for Determining Density of Structural Lightweight Concrete
16. ASTM C595 Standard Specification for Blended Hydraulic Cements
17. ASTM C618 Standard Specification for Coal Fly Ash and Raw or Calcined Natural Pozzolan for Use in Concrete
18. ASTM C989 Standard Specification for Slag Cement for Use in Concrete and Mortars
19. ASTM C1399 Standard Test Method for Obtaining Average Residual-Strength of Fiber-Reinforced Concrete
20. ASTM C1602 Standard Specification for Mixing Water Used in the Production of Hydraulic Cement Concrete

B. American Concrete Institute (ACI):
1. Comply with applicable provisions of following ACI publications, latest edition, except as otherwise indicated.
2. ACI 301 Specifications for Structural Concrete for Buildings.

C. Concrete Mixture Proportioning:
1. Employ and pay for testing agency acceptable to Architect and Owner to perform materials evaluation, testing and design of concrete mixes.

2. Certificates, signed by material producer and Contractor, may be submitted in lieu of material testing when approved by Architect.

D. Concrete Testing:
1. Specified in Section 03 08 13
2. Contractor to assist with related communication and temporary storage of test cylinders at jobsite.

E. Preinstallation Conference:
1. See Section 01 31 19.
2. Minimum thirty-five (35) days prior to start of concrete construction schedule, conduct meeting to discuss approved mix designs and required methods and procedures to achieve required concrete construction.
3. Send a Pre-Installation Conference agenda to attendees twenty (20) days prior to scheduled date of the conference.
4. Invite responsible representatives, in addition to those listed in Section 01 31 19, including but not limited to following:
   a. Ready-mix concrete producer.
   b. Admixture manufacturer.
   c. Concrete pumping equipment manufacturer
   d. Laboratory responsible for the concrete design mix.
   e. Owners Testing Agency responsible for field quality control.
5. Record minutes of the meeting and distribute to attendees within five (5) days of conference.
   a. Include statement by concrete contractor indicating proposed mix design, and placing, finishing and curing procedures produce concrete quality required by specifications.

1.3 SUBMITTALS

A. Product Data:
1. Concrete Mix Designs:
   a. Submit each Mix Design individually.
   b. Do not combine multiple mix designs into a single submittal.
   c. Submit following data for each concrete mix proposed:
      1) Intended use.
      2) Proportions of materials.
      3) Slump.
      4) Air content.
      5) 7-day and 28-day compression test results of trial mixes or those used for standard deviation analysis of an established mix.
         a) Test records for use in standard deviation analysis must have been made within 24 months of the date of the submittal and represent a time span of production of not less than 45 days.
   d. Submit source and certification or proof of quality (and compatibility of admixtures) for each of the constituents of the proposed concrete mixes. Compatibility of admixture must be certified.
      1) Cement.
      2) Aggregate.
      3) Water.
      4) Admixtures:
         a) Air Entraining Admixture.
         b) High-Range Water Reducer.
         c) Other.
   e. Submit concrete mix designs using the mix design submittal form included at the end of this specification:

PART 2 - PRODUCTS

2.1 MATERIALS

A. Lightweight Concrete:
   1. Concrete made with low density, lightweight aggregate ASTM C 330 or mixture of lightweight and normal weight aggregate.
   2. Concrete having a density between 90 PCF and 115 PCF.

B. Normal Weight Concrete:
   1. Concrete for which density is not a controlled attribute.
   2. Materials used in production must be of same quality, properties and proportion as indicated in approved concrete mix design as approved by Architect.

C. Under-slab Vapor Retarder:
   1. Specified in Section 03 31 10.

D. Cement:
   1. Portland cement conforming to ASTM C150 or blended cements conforming to ASTM C595.
   2. Color: Natural gray.

E. Aggregates:
   1. General:
      a. Regard fine and coarse aggregates as separate ingredients.
      b. Each size of coarse aggregate, as well as combination of sizes when two or more are used, shall conform to grading requirements of applicable ASTM specifications.
   2. Normal Weight Concrete:
      a. ASTM C33, also aggregate shall be obtained from a source approved by the State Highway Department for use in concrete for state bridges.

F. Potable Water:
   1. Conforming to ASTM C1602.

G. Admixtures:
   1. Use only when specifically required or permitted by Contract Documents, otherwise must be approved by Architect.
   2. Trial mixes and tests shall be prepared with job materials, including admixture, to demonstrate that there will be no subsequent reduction in strength or durability of hardened concrete.
   3. Provide admixtures certified by manufacture to be compatible with other admixtures. Calcium chloride, thiocyanates, and admixtures containing more than 0.05 percent chloride ions are not permitted.
   4. Air-entraining Admixtures: ASTM C260.
   5. Mid-Range Water Reducer: ASTM C494, Type A.
   6. High-Range Water Reducer :
      a. ASTM C494, Type F or G. Subject to complying with these specifications, the following manufacturers of High Range Water Reducing Admixtures are approved:
         1) Daracem – 100 or Adva Flow Seriesby Grace Construction Products.
         2) MasterRheobuild 1000 , MasterGlenium Series or PS 1466 by BASF Master Builders Solutions.
         3) Eucon 37 , Eucon SPJ or Plastol Series by Euclid Chemical.
         4) PSP-N, PSP-N2, PSP-R, and PSP-L by Procrete Industries.
      b. Other manufacturers desiring approval comply with Section 00 26 00.
   7. Water-reducing, Retarding, and Accelerating Admixtures: ASTM C494.
   8. Non-Chloride, Non-Corrosive Accelerating Admixture:

a. ASTM C494, Type C or E, and not contain more chloride ions than are present in municipal drinking water. The admixture manufacturer must have long-term non-corrosive test data from an independent testing laboratory (of at least a year's duration) using an acceptable accelerated corrosion test method such as that using electrical potential measures. Acceptable products include:
   1) Euclid Chemical Co; Accelguard (The) 80, 90 or NCA . www.euclidchemical.com
   2) BASF; Masterset AC 534. www.buildingsystems.basf.com
   3) W.R. Grace & Co; Daraset. www.na.graceconstruction.com
b. Other manufacturers desiring approval comply with Section 00 26 00.

9. Viscosity Modifying Admixture (VMA):
   a. Specialty admixture to reduce bleed and segregation in concrete
      1) Euclid Chemical Company (The); Visctrol.
      2) Boral Materials Technologies; Boral SL.
      3) BASF; MasterMatrix VMA Series
   b. Other manufacturers desiring approval comply with Section 00 26 00.
10. Calcium-nitrite Corrosion Inhibitor:
   a. Base Products: DCI and DCI S by Grace Construction Products.
   b. Rheocrete CNI by BASF Master Builders Solutions.
   c. Eucon CIA by the Euclid Chemical Company
11. Incorporate at a rate of ___ G/YD3 in the areas identified.
12. Supplementary Cementitious Materials:
   a. Fly ash - ASTM C618, Class C or Class F.
      1) Samples shall be obtained, prepared, and tested in accordance with ASTM C311.
   b. Ground Granulated Blast-Furnace Slag: ASTM C989, Grade 100 or 120.
13. Synthetic Macro Fibers
   a. ASTM C1116 Type III
   b. Where permitted, fiber reinforced concrete shall replace and provide equivalent reinforcing to that indicated in both direct tension and bending capacity for concrete thickness indicated
   c. Testing per ASTM C1018 and/or ASTM C1399 shall indicate a minimum residual strength of 170 PSI. Establish dosage rate required to meet performance specified.
      1) Submit manufacturers data verifying conformance
   d. Minimum Dosage rate 4 LBS/CU YD.
   e. Acceptable manufacturers
      1) W.R.Grace Co,; Strux 90/40
      2) Euclid Chemical Company Tuf-Strand SF

2.2 PROPORTIONING CONCRETE MIXES

A. General:
   1. Contractor and concrete supplier are responsible to provide concrete, in-place, which satisfies requirements listed in following table.
   2. Contractor and concrete supplier are responsible to adjust the concrete mixes, as needed, to:
      a. Correct for non-conformance.
      b. Correct for a variation in the quality of a constituent.
      c. Compensate for extreme conditions in the field.

B. Establish concrete material proportions by any of the proportioning methods described in AC1-301 guidelines.

Concrete Properties Table – IP Units

Use	28-day strength (KSI)	Dry Unit Weight (PCF)	Max Aggregate. Size (IN)	Air percent	Max. W/C Ratio	Slump (IN)	Cement type
Footings ,Grade Beams	4.0		1-1/2	4.5	0.48		I
Drilled Piers	4.0		1 1/2		0.57		I

Concrete Properties Table – IP Units							
Use	28-day strength (KSI)	Dry Unit Weight (PCF)	Max Aggregate. Size (IN)	Air percent	Max. W/C Ratio	Slump (IN)	Cement type
Walls	4.0		1	4.5	0.48		I
Slabs-on-grade	3.5		1 1/2		0.53		I
Structural floors, girders, slabs, columns	4.0		3/4		0.45		I
Post-tensioned slabs & beams	5.0		3/4 or 1	6	0.40		I
Columns	6.0		3/4		0.35	9	I
Radiology Shield, Wall, and Roof	3.0	147	1		0.70		I
Lt. Wt. Slabs on composite metal deck	3.5	115	3/4		0.50		I
Norm. Wt. Slabs on composite metal deck	3.5		3/4		0.50		I
Lt. Wt. Slabs, beams, girders	4.0	112	3/4		0.57		I
All other uses	4.0		3/4	6	0.48		I

C. Instructions for use of Table:
   1. Provide concrete mixes with properties indicated in locations identified in Use column.
   2. 28-day Strength:
      a. Installed concrete must meet or exceed the minimum 28-day compressive strength indicated.
      b. Laboratory mix design strengths must exceed this strength by the appropriate amount per AC1-301.
      c. Determine strength in accordance with ASTM C192 and ASTM C39.
   3. Dry Unit Weight:
      a. If no value is listed, assume normal weight.
      b. Dry unit weight of light weight mixes shall be maximum air dry unit weight permitted.
      c. Correlate fresh weight with air dry weight of same mix to use as basis of acceptance on job site. Test in accordance with ASTM C567 and ASTM C138.
      d. Dry unit weight for concrete for Radiation Shielding shall be minimum air dry unit weight permitted. Use heavy aggregate if necessary.
   4. Maximum Aggregate Size:
      a. Maximum size of coarse aggregate determined in accordance with:
         1) ASTM C33 for normal weight concrete.
      b. Some mixes are designated 3/4 IN or 1 IN, permitting contractor option.
   5. Air Content:
      a. Required percentage of entrained and entrapped air as measured by ASTM C231, ASTM C173, or ASTM C138, as appropriate.
      b. Tolerance of air content as delivered is +/- 1-1/2 percent for normal weight and +/- 2 percent for lightweight concrete.
      c. When left blank, the required air content is not specified. All concrete exposed to freezing and thawing shall have air content between 4.5% and 7.5%. All interior slabs and all slabs to receive dry shake shall have a maximum air content of 3%.
   6. Water Reducer:
      a. Mid Range Water Reducer or High Range Water Reducer shall be provided as necessary to achieve slump indicated.

b. Contractor, as option, may elect to use Water Reducers to improve workability or permit pumping.

7. Maximum W/C Ratio:
   a. Maximum ratio of pounds of water allowed to pounds of cementitious material used in the concrete mix.
   b.
8. Slump:
   a. Mixes without Water Reducers:
      1) Slump tolerance: Up to 1 IN above maximum indicated is allowed, provided the average of 5 consecutive batches does not exceed the indicated amount by more than a 1/2 IN.
   b. Mixes with Water Reducers:
      1) Slump indicated is after dosing.
      2) Slump tolerance after dosing: +1-1/2 IN and -1 IN is permitted for each batch.
   c. Determine slump in accordance with ASTM C143.
   d. Where slump is not specified, provide concrete with slump in accordance with approved mix designs
9. Cement:
   a. Type: Provide cement type indicated.
   b. As option, the contractor/supplier may use Fly Ash or Ground Blast Furnace Slag for partial replacement of cement.
      1) For each unit of cement that is removed, replace with two units of Class F Fly Ash or one unit of Class C Fly Ash.
      2) For each unit of cement that is removed, replace with one unit of Ground Blast Furnace Slag.
      3) Maximum amount of cement replaced shall not exceed that specified in table 4.2.2.7.b.2 of ACI 301
      4) W/C ratio shall be based on total cemetitous material content

D. Admixtures:
   1. Use admixtures in accordance with manufacturer's instructions.
   2. Use only approved admixtures.

PART 3 - EXECUTION

3.1 STORAGE OF MATERIALS

A. Store cement in weather tight buildings, bins, or silos which will exclude moisture and contaminants.

B. Arrange aggregate stockpiles and use in a manner to avoid excessive segregation and to prevent contamination with other materials or with other sizes of like aggregates.
   1. Perform tests for determining conformance to requirements for cleanliness and grading on samples secured from aggregates at point of batching.
   2. Do not use frozen or partially frozen aggregates.

C. Allow sand to drain until it has reached relatively uniform moisture content before use.

D. Store admixtures in manner to avoid contamination, evaporation, or damage.
   1. For those used in form of suspensions or non-stable solutions, provide agitating equipment to assure uniform distribution of ingredients.
   2. Protect liquid admixtures from freezing and temperature changes which would adversely affect their characteristics.

3.2 MIXING AND DELIVERY

A. Batch, mix and transport concrete in accordance with ASTM C94.

B. Batch and mix admixtures in accordance with manufacturer's instructions.

C. Concrete shall have a slump of 2 to 4 IN when it arrives at job site.
   1. Water additions at job site shall be limited to comply with W/C Ratio requirements.
   2. Do not allow water to be added to the mix unless the amount allowed is clearly indicated on the truck delivery ticket.

D. Following addition of High Range Water Reducer, mix for a minimum of 70 revolutions or 5 minutes to assure a consistent mixture.

E. Reduction of required average strength:
   1. During construction, and after sufficient data becomes available, laboratory strength of mixes may be reduced in accordance with Section 3.11 of AC1-301, subject to approval by the Architect.

END OF SECTION

This page intentionally left blank

SECTION 03 31 10
CONCRETE MIXING, PLACING, JOINTING AND CURING

PART 1 - GENERAL

1.1 SUMMARY

A. Furnish all labor, materials, tools, equipment, and services for Concrete Mixing, Placing, Jointing and Curing as indicated, in accordance with provisions of Contract Documents.

B. Completely coordinate with work of other trades.

1.2 QUALITY ASSURANCE

A. Materials standards:
1. ASTM C171: Standard Specification for Sheet Materials for Curing Concrete.
2. ASTM C309: Standard Specification for Liquid Membrane-Forming Compounds for Curing Concrete.
3. ASTM C1315: Standard Specification for Liquid Membrane Forming Curing Compounds Having Special Properties for Curing and Sealing Concrete.
4. ASTM D1751: Standard Specification for Preformed Expansion Joint Fillers for Concrete Paving and Structural Construction (Non-extruding and Resilient Bituminous Types).
5. ASTM D1752: Standard specification for Preformed Sponge Rubber and Cork and Recycled PVC Expansion Joint Fillers for Concrete Paving and Structural Construction.
6. ASTM E1643 Standard Practice for Installation of Water Vapor Retarders Used in Contact with Earth or Granular Fill Under Concrete Slabs.
7. ASTM E1745 Specification for Water Vapor Retarders Used in Contact with Soil or Granular Fill under Concrete Slabs

B. Production standards:
1. ASTM C94: Standard Specification for Ready-mixed Concrete.
2. ASTM C138 Standard Test Method for Density (Unit Weight), Yield, and Air Content (Gravimetric) of Concrete.
3. ASTM C567: Standard Test Method for Determining the Density of Structural Lightweight Concrete.
4. ACI 305.1: Hot Weather Concreting.
5. ACI 306.1: Cold Weather Concreting.

1.3 SUBMITTALS

A. Shop drawings:
1. Placement plans: Indicate proposed locations of construction joints and placement sequence.
2. Screeding and finishing plan.

B. Product Data

C. Project information:
1. Joint filler technical data.
2. Curing compound technical data.
3. Waterstop technical data.

PART 2 - PRODUCTS

2.1 ACCEPTABLE MANUFACTURERS

A. Strippable Curing Compound:
   1. Base:
      a. Kurez DR VOX or Kurez W VOX by Euclid Chemical Company.
      b. Horncure WB, Horncure WB 30 by Tamms.

B. Chemical Curing Compound :
   1. Base:
      a. L&M Construction Chemicals.
   2. Optional:
      a. Dayton Superior.
      b. Euclid.
      c. Sonneborne.
      d. WR Meadows.

C. Curing Sheet Material
   1. Base
      a. Hydracure M5 by PNA Construction Technologies, Inc., Matthews,
      b. Transguard 4000 by Reef Industries (Armorlon Division), Incorporated,

D. Other manufacturers desiring approval comply with Section 00 26 00.

2.2 MATERIALS

A. Concrete materials and proportioning: See Section 03 31 00.

B. Expansion joint filler, premolded: Type required, conforming to ASTM D1751 or ASTM D1752.

C. Strippable Curing Compound:
   1. Conform to ASTM C309 (Voc Compliant, 350 g/l).
   2. For use on slabs receiving subsequent applied finishes and where noted on the drawings.
   3. Install in strict accordance with the manufacturer's recommendation and supervision.

D. Curing Sheet Material:
   1. Provide where concrete is scheduled to be stained per section 09 67 75.
   2. Moisture-Retaining Cover Conforming to ASTM C171: Naturally colored, non-woven polypropylene fabric with a 4-mil non-perforated reflective (white) polyethylene coating.
   3. Fabric shall exhibit low permeability and high moisture retention.

E. Granular Fill: See Section 31 23 00.

PART 3 - EXECUTION

3.1 MIXING AND PRODUCTION OF CONCRETE

A. Batch, mix and transport ready-mixed concrete in accord with ASTM C94.
   1. Plant equipment and facilities shall conform to Check List for Certification of Ready Mixed Concrete Production Facilities of National Ready Mixed Concrete Association.

B. Site batched and mixed concrete will be permitted only after ability to control quality has been demonstrated to satisfaction of Architect.

3.2 MIXING - CONTROL OF ADMIXTURES

A. Admixtures shall be added in accordance with Manufacturers recommendations

B. If two or more admixtures are used, verify compatibility with manufacturers

3.3 MIXING - TEMPERING AND CONTROL OF MIXING WATER

A. Mix concrete only in quantities for immediate use. Discard concrete which has set.

B. When concrete arrives at project with slump below that suitable for placing, water may be added only if neither maximum permissible water-cement ratio nor maximum slump is exceeded.
   1. Incorporate water by additional mixing equal to at least half of total mixing required.
   2. Do not add water after discharge commences

3.4 MIXING - WEATHER CONDITIONS

A. Cold weather:
   1. Comply with ACI 306.
   2. In cold weather, temperature of concrete when delivered at site shall conform to following limitations:
   3. For sections with least dimension greater than 36 IN, comply with table 3.1 of ACI 306R

Minimum Concrete Temperature Required at Time of Pour		
Air Temperature @ time of pour	**For sections with least dimension less than 12 IN**	**For sections with least dimension 12 IN to 36 IN**
Above 30 DegF	60 DegF	55 DegF
0 to 30 DegF	65 DegF	60 DegF
Below 0 DegF	70 DegF	65 DegF

Minimum Concrete Temperature Required within 24 Hours of Pour		
Air Temp within 24 Hours of pour	**For sections with least dimension less than 12 IN**	**For sections with least dimension 12 IN or greater**
Below 32	60 DegF	50 DegF

   4. If water or aggregate is heated above 100 degF, combine water with aggregate in mixer before cement is added.
      a. Do not mix cement with water or with mixtures of water and aggregate having a temperature greater than 100 degF.
      b. Final temperature of combined mix shall not exceed 90 degF or be high enough to cause flash set or loss of slump or workability.

B. Hot weather:
   1. Comply with ACI 305 if high temperature, low slump, flash set, or cold joints are encountered.
   2. Cool ingredients before mixing, or add flake ice or well-crushed ice of a size that will melt completely during mixing for all or part of mixing water. Account for water contribution by ice when calculating the quantity if mixing water and insure that specified W/C ration is not exceeded.

3.5 PREPARATION BEFORE PLACING

A. Equipment:
   1. Remove hardened concrete and foreign material from inner surfaces of conveying equipment.
   2. Provide spare vibrator on job site during concrete placing operations.
   3. In cold weather, have protective blankets ready and heaters operational and in-place before placing concrete.

B. Forms:

1. Complete formwork: Remove frost, snow, ice, water and foreign material; secure reinforcement in place, position expansion joint material, anchors, and other embedded items and have entire preparation inspected prior to concrete placement.
2. In hot weather when temperature of reinforcing or forms is greater than 120 degF spray forms and reinforcement with water just prior to placing concrete.

C. Screeds and screed rails:
1. General:
   a. Develop a screed system to accurately strike off fresh concrete to the surfaces defined on the drawings.
   b. Anticipate the deflection of all formwork and support systems. Provide and place extra concrete as necessary to produce finish surfaces with specified tolerances at designated elevations and contours at no additional cost to the Owner.
   c. When form work is cambered whether shored or un-shored and screeding is performed perpendicular (i.e., up and over) to the crown of the camber set screed rails to follow the camber and provide a slab of uniform thickness.
      1) When screeding parallel with the camber set one screed at midspan along the crown of the camber and one along the girder or support.
      2) Two passes of the screed is necessary to cover one full bay.
   d. Other screeding methods may be used provided the deflection of un-shored formwork is taken into consideration.
   e. On unshored steel framing systems, accurately strike off concrete to produce a level surface after steel supporting system has deflected due the dead weight of the fresh concrete. Slab thickness on cambered steel shall not be less than that indicated on plan.
   f. If not required in the documents and subjected to the approval of the Architect, the Contractor as option may camber the formwork.
   g. All concrete shall be struck off with a vibrating screed.
   h. Use of a "wet screed" system will not be permitted unless:
      1) The concrete is struck with a pneumatically vibrated "floater screed."
      2) A highway straight edge is used to true the surface perpendicular to the direction of the screeding.
      3) A satisfactory finish is produced on a trial slab.
   i. Submit a screeding and finishing plan for approval.
      1) A representative trial slab pour shall be provided to demonstrate that the specified tolerances and a satisfactory surface can be provided by the proposed method of screeding and finishing.

D. Subgrade for slabs on grade:
1. Subgrade shall be well drained and of adequate and uniform load bearing nature.
   a. Keep in-place density of subgrade soils at least to minimum indicated.
2. Keep subgrade free of frost before concrete placing begins.
   a. If temperature inside a building where concrete is to be placed is below freezing, raise temperature and maintain above 50 degF long enough to remove frost from subgrade and reinforcing.
3. Keep subgrade moist at time of concreting.
   a. If necessary, dampen with water in advance of concreting.
   b. Allow no free water standing on subgrade nor muddy or soft spots when concrete is placed.

3.6 PROTECTION

A. Unless adequate protection is provided and approval is obtained, do not place concrete when temperature is below freezing or during rain, sleet or snow.

B. Do not allow rainwater to increase mixing water nor to damage surface finish.

C. Concrete damaged by rain or weather and judged defective by Architect shall be removed and replaced by Contractor at no additional cost to Owner or corrected by procedures listed in Section "Testing and Acceptance."

3.7 CONVEYING

A. Handle concrete from mixer to place of final deposit as rapidly as practicable by methods which prevent segregation or loss of ingredients and assure that quality is maintained.

B. Use equipment conforming to ASTM C94.

C. Use horizontal belt conveyors or mount at a slope which will not cause excessive segregation or loss of ingredients.
   1. Protect concrete against undue drying or rise in temperature.
   2. Handle to prevent segregation.
   3. Do not allow mortar to adhere to belt.
   4. Discharge long runs into a hopper or through a baffle.

D. Use metal or metal-lined chutes with slope between 1 vertical and 2-3 horizontal.
   1. Chutes more than 20 FT long and chutes not meeting slope requirements may be used provided they discharge into a hopper before distribution.

E. Pumping or pneumatic conveying equipment shall be of suitable kind with adequate pumping capacity.
   1. Control pneumatic placement so that segregation is not apparent in discharged concrete.
   2. Loss of slump in pumping or pneumatic conveying equipment shall not exceed 2 IN.
   3. Do not convey concrete through pipe made of aluminum or aluminum alloy.

3.8 DEPOSITING IN FORMS

A. Work includes:
   1. Deposit concrete continuously or in layers of such thickness that no concrete is deposited on concrete which has hardened sufficiently to cause formation of seams or planes of weakness within section.
   2. Place at such a rate that concrete which is being integrated with fresh concrete is still plastic.
   3. Do not deposit concrete which has partially hardened or has been contaminated by foreign materials.
   4. Remove temporary spreaders in forms when concrete placing has reached an elevation rendering their service unnecessary.
   5. They may remain embedded in concrete only if made of metal or concrete and if prior approval has been obtained.

B. Do not start placing concrete in supported elements until concrete previously placed in columns and walls is no longer plastic and has been in place at least two hours.

C. Deposit concrete as nearly as practicable in its final position to avoid segregation due to re-handling or flowing.
   1. Do not subject concrete to procedure which will cause segregation.
   2. Concrete shall not drop more than 6 FT unless approved by the Architect/Engineer. For greater heights, provide special mix design, chutes, spouts, tremies, or other approved method.

D. Concrete buckets shall be equipped with rubber discharge tubes.
   1. Tube size shall be effective in directing flow of concrete directly downward between reinforcing.
   2. Unless it can be demonstrated, no segregation will occur with greater distances, maximum free fall distance of concrete below flexible tube is limited to 4 FT.

E. Consolidation:

1. Consolidate concrete by vibration, so that concrete is thoroughly worked around reinforcement, around embedded items and into corners of forms eliminating air or stone pockets which may cause honeycombing, pitting, or planes of weakness.
2. Use internal vibrators having a minimum frequency of 8000 vibrations per minute to consolidate concrete effectively.
3. Do not use vibrators to transport concrete within forms.
4. Insert vibrators and withdraw at points approximately 18 IN apart.
5. At each insertion allow duration sufficient to consolidate concrete but not sufficient to cause segregation; generally from 5 to 15 sec.
6. Where concrete is to have an as-cast finish, bring a full surface of mortar against form by vibration process, supplemented if necessary by spading, to work coarse aggregate back from formed surface.

3.9 SLAB PLACEMENT

A. Coordinate mixing and placing with finishing.
   1. Do not place concrete on subgrade or forms more rapidly than it can be spread, straight edged, and darbled or bull floated.
   2. Perform these operations before bleed water has an opportunity to collect on surface.

B. To obtain good surfaces and avoid cold joints, plan size of finishing crews with due regard for effects of concrete temperature and atmospheric conditions on rate of hardening of concrete.
   1. If construction joints become necessary, construct as required under joints and embedded items.

C. Consolidation:
   1. Thoroughly consolidate concrete in slabs.
   2. Use internal vibration in beams and girders of framed slabs and along bulkheads of slabs on grade.
   3. Obtain consolidation of slabs with vibrating screeds, roller pipe screeds, internal vibrators, or other approved means.

3.10 JOINTS AND EMBEDDED ITEMS

A. Construction joints, other than slab on grade:
   1. Locate joints not indicated so as to least impair strength of structure.
      a. Place joints in locations approved by Architect/Engineer.
   2. In general, locate near middle of spans of slabs, beams, and girders unless a beam intersects a girder at this point, in which case, offset joint in girder a distance equal to twice width of beam.
      a. Locate joints in walls and columns at underside of floors, slabs, beams, or girders and at tops of footings or floor slabs.
      b. Place beams, girders, brackets, column capitals, haunches, and drop panels at same time as slabs.
      c. Make joints perpendicular to main reinforcement.
   3. Continue reinforcement across joints.
   4. Clean surface of concrete at joints thoroughly and remove laitance.
      a. Prior to placing adjoining concrete, dampen (but do not saturate) hardened concrete of construction joints.

B. Joints in slabs-on-grade:
   1. Construction joints:
      a. Place keyed dowelled or diamond plate construction joints as indicated on plans and at locations where a slab placement is terminated or interrupted.
      b. Size of placements and sequence of slab placement is Contractor's option, except construction joints shall be located at a control joint location.
      c. Construction joints act as control joints.
   2. Control joints:

a. Provide contraction (control) joints as indicated.
b. If not shown, provide along column centerlines.
c. Where column centerline spacing or spacing between column centerlines and walls exceeds 30 FT, provide an intermediate joint(s) at intervals not exceeding 30 FT. Locate joints to produce panels that are as square as possible with the length no more than 1.5 times the width
d. Also provide joints where change in slab width occurs, such as at block-outs, pits, etc.
e. If saw cut joints are required or permitted, time cutting properly with set of concrete by one of the following methods
   1) Start cutting as soon as concrete has hardened sufficiently to prevent aggregates being dislodged by saw. Complete sawing within 12 hours after placement.
   2) The soff cut saw shall be used within two hours of final finishing.
      a) Cut depth not less than 10 percent of slab thickness with a 1-inch minimum.
      b) Remove debris in path of cut and under Skid Plate before cutting. Skid Plate must remain flat on surface.
      c) Use Soff-Cut blades and Skid Plates, using a new Skid Plate with each new blade.
      d) Install Soff-Cut joint protector at saw-cut intersection prior to cross-cut.
      e) Remove dry powder without disturbing finish.
      f) Avoid traffic across saw cut until sufficient strength is gained to protect joint edges.
   3) If an alternate method or timing is proposed, submit detailed plans for review and acceptance.

3. Complete before shrinkage stresses become sufficient to produce cracking.
4. Isolation joints:
   a. Provide isolation joints around columns, and between slab on grade and walls.
   b. Also provide isolation joints around equipment or machinery isolation pads, pits, pipes, etc., unless detailed otherwise.

C. Expansion joints:
   1. Do not permit reinforcement or other embedded metal items bonded to concrete, except dowels in floors bonded on only one side of joints, to extend continuously through expansion joint.
   2. Locate expansion joints as indicated.

D. Acoustic Isolation Joint:
   1. Do not permit any reinforcing or other bonded items to extend through joint.
   2. Remove all forming material and clean joint thoroughly prior to cover installation. Locate as indicated.

E. Place sleeves, inserts, anchors, and embedded items required for adjoining work or for its support, prior to concreting.
   1. Give Contractors whose work is related to concrete or supported by it ample notice and opportunity to introduce and/or furnish embedded items before concrete placement.
   2. Position expansion joint material, waterstops, and other embedded items accurately and support against displacement.
   3. Fill voids in sleeves, inserts and anchor slots temporarily with readily removable material to prevent entry of concrete.

3.11 BONDED JOINTS

A. At construction joints indicated as bonded, obtain bond by one of following methods:
   1. Roughen surface of concrete in an approved manner which will expose aggregate uniformly and not leave laitance, loosened particles of aggregate or damaged concrete at surface.
      a. Dampen (but do not saturate) hardened concrete of joints in exposed work; joints in middle of beams, girders, joists, and slabs; and joints in work designed to contain liquids.

b. Thoroughly cover with a coat of cement grout of similar proportions to mortar in concrete.
c. Use grout as thick as possible on vertical surfaces and at least 1/2 IN thick on horizontal surfaces.
d. Place fresh concrete before grout has attained its initial set.

2. Prepare joints receiving an adhesive and apply adhesive in accordance with manufacturer's recommendations prior to placing of fresh concrete.
3. Prepare surfaces of joints which have been treated with a chemical retarder in accordance with manufacturer's recommendations prior to placing of fresh concrete.

3.12 SLAB FINISHING

A. See Section 03 35 00.

3.13 CURING AND PROTECTION

A. Work includes: Beginning immediately after placement, protect concrete from premature drying, hot or cold temperatures, and mechanical injury, and maintain with minimal moisture loss at relatively constant temperature for period necessary for hydration and hardening of concrete. Materials and methods of curing subject to approval.

B. Preservation of Moisture:
1. Interior Slabs:
   a. Application of sheet curing materials.
   b. Application of strippable curing compound.
      1) Submit written approval from floor covering manufacturer prior to use.
      2) Apply in accord with recommendations of manufacturer immediately after water sheen, which may develop after finishing, has disappeared.
      3) Apply continuous film at manufacturer's specified rate.
      4) Completely remove prior to application of floor covering material.
2. Other concrete surfaces not in contact with forms apply one of following procedures immediately after completion of placement and finishing:
   a. Ponding or continuous sprinkling.
   b. Application of absorptive mats or fabric kept continuously wet.
   c. Application of sand kept continuously wet.
   d. Continuous application of mist spray, not exceeding 150 degF.
   e. Application of sheet curing materials.
   f. Application of other moisture-retaining covering as approved.
   g. Application of curing compound.
      1) Apply in accord with recommendations of manufacturer immediately after water sheen, which may develop after finishing, has disappeared.
      2) Apply continuous film at manufacturer's specified rate.
      3) Do not use on surface against which additional concrete or other material is to be bonded, unless it is proven that curing compound will not prevent bond or positive measures are taken to remove curing compound completely from areas to receive bonded applications.
3. Minimize moisture loss from surfaces placed against wooden forms or metal forms exposed to heating by sun by keeping forms wet until they can be safely removed.
   a. After form removal cure concrete until end of time prescribed.
4. Continue curing in accordance with ACI 318. Seven days for most concrete.
   a. If tests made of cylinders, kept adjacent to structure and cured by same methods, indicate average compressive strength has reached 70 percent of specified strength, (fc'), moisture retention methods may be terminated.
   b. If one of curing procedures indicated above is used initially, it may be replaced by one of other procedures indicated any time after concrete is 1 day old, provided concrete is not permitted to become surface dry during transition.

C. Temperature, wind and humidity:
   1. Cold weather:
      a. When mean daily outdoor temperature is less than 40 degF maintain temperature of concrete between 50 and 70 degF for required curing period.
      b. When necessary make arrangements for heating, covering, insulating, or housing concrete work adequate to maintain required temperature without injury.
      c. Do not use combustion heaters during first 24 hours unless precautions are taken to prevent exposure of concrete to exhaust gases which contain carbon dioxide.
   2. Hot weather:
      a. When necessary make provision for windbreaks, shading, fog spraying, sprinkling, ponding, or wet covering with a light colored material.
      b. Take such protective measures as quickly as concrete hardening and finishing operations will allow.
   3. Rate of temperature change:
      a. Keep changes in temperature of air immediately adjacent to concrete during and immediately following curing period as uniform as possible.
      b. Do not exceed 5 degF in any 1 hour or 50 degF in any 24-hour period.

D. Protection from mechanical injury:
   1. During curing period, protect concrete from damaging mechanical disturbances, such as load stresses, heavy shock, and excessive vibration.
   2. Protect finished concrete surfaces from damage by construction equipment, materials, or methods, and by rain or running water.
   3. Do not load self-supporting structures in such a way as to overstress concrete.

E. Protection of slabs-on-grade from frost:
   1. Interior slabs exposed to freezing temperatures shall be adequately protected so that frost does not develop in supporting subgrade.

3.14 CONCRETE CLEANING

A. Clean all Cast-in-Place concrete walls which will remain exposed to view.
   1. Including walls which are scheduled for painting.
   2. Areas: All exposed exterior concrete vertical surfaces.

PART 4 - MEASUREMENT AND PAYMENT

A. Refer to Section 01 22 00, Part 4, regarding measure and payment.

B. Work of this Section is considered incidental to work under other payment items and no separate measurement and payment will be made to the Contractor for Work of this Section. Work of this section shall include furnishing all labor, materials, tools, equipment, supplies, supervision, and incidentals necessary as described by the Contract Documents.

END OF SECTION

SECTION 03 33 00
ARCHITECTURAL CAST-IN-PLACE (ACIP) CONCRETE

PART 1 - GENERAL

1.1 SUMMARY

A. Furnish all labor, materials, tools, equipment, and services for Architectural Cast-In-Place (ACIP) Concrete, as indicated, in accordance with provisions of Contract Documents.

B. Completely coordinate with work of other trades.

1.2 QUALITY ASSURANCE

A. Requirements of this section shall augment general requirements specified in Section 03 11 00, Section 03 21 00, Section 03 31 00, Section 03 31 10 and Section 03 35 00.

B. Requirements of this section shall augment general requirements specified in Section 03 05 00.

C. Testing:
   1. Specified in Section 03 08 13.

D. Design Reference Sample:
   1. Definition: Sample of approved ACIP color, finish and texture, pre-approved by Architect.

1.3 MOCK-UP

A. Produce a Mock-up panel approximately 16 FT^2 for on-site review by Architect/Owner.
   1. For final approval of colors and textures and for quality assurance of subsequent work.
   2. Mock-up may be incorporated into the final work if approved.

B. Requirements:
   1. Incorporate full scale details of architectural features, finishes, textures, and transitions to adjacent materials.
   2. Mock-up to be representative of the finished work in all respects including: colors, finishes, textures, anchors, connections, flashings, and joint fillers as accepted on the final Shop Drawings.
   3. Build Mockup to comply with following requirements, using materials indicated for completed work:
      a. Locate where indicated or, if not indicated, as directed by Architect.
      b. Maintain Mock-up during construction in an undisturbed condition as a standard for judging the completed Work.
      c. Damage part of an exposed-face surface for each finish, color, and texture, and demonstrate adequacy of repair techniques proposed for repair of surface blemishes.
      d. Obtain approval of Mock-up before starting subsequent work.
      e. Remove Mock-up when directed.

1.4 SUBMITTALS

A. Shop Drawings:
   1. Shop drawings of forms for all exposed surfaces showing surface details, jointing of facing panels, locations of form ties, and any necessary alignment bracing.

B. Product Data:
   1. Mix Design:
      a. See Section 03 31 00.

C. Samples:

1. Sample:
    a. Purpose: For pre-selection of colors and textures:
    b. Minimum Size: 18 x 18 IN.
2. Mock-up; Refer to 1.3 of this document.

D. Project Information:
1. Test reports.
2. Design Mixes: For each concrete mix including compressive strength and water-absorption tests.

PART 2 - PRODUCTS

2.1 ACCEPTABLE MANUFACTURERS

A. Other materials listed:
1. Base:
    a. As indicated.

B. Other manufacturers desiring approval comply with Section 00 26 00.

2.2 CONCRETE MATERIAL

A. General:
1. Refer to Section 03 31 00 for general requirements and material quality standards.
2. Comply with the following additional requirements listed below.

B. Portland Cement:
1. Color:
    a. As necessary to reproduce coloration of Design Reference Sample.

C. Supplementary Cementitious Materials:
1. Fly ash, silica flume and ground slag.

D. Aggregates:
1. Use normal weight, ASTM C33, aggregates for ACIP concrete.
    a. Lightweight aggregates, ASTM C330, are not allowed for ACIP.
2. Stockpile aggregates for each type exposed finish from a single source for entire project.
3. Color:
    a. To match selected Design Reference Sample.

E. Coloring Admixture:
1. ASTM C979, synthetic or natural mineral-oxide pigments or colored water-reducing admixtures, temperature stable and non-fading.
2. Lime and alkali resistant.
3. Limit type and amount used so as not to reduce quality of concrete.
4. Color: As required by Design Reference Sample.

2.3 REINFORCING MATERIALS

A. Reinforcement:
1. Specified in Section 03 21 00.

2.4 CLEANING MATERIALS

A. Cleaning Products:
1. Specified in Section 04 05 10.

2.5 MIXES

A. General:

1. Refer to Section 03 31 00 for general requirements.
2. Comply with the following additional requirements listed below.

B. Mixing:
1. For concrete of a desired color, use same mixture proportions throughout.
2. Avoid volumetric changes in material proportions from batch to batch.
3. Use only:
   a. One type and brand of cement from same mill.
   b. One source and maximum size of coarse aggregate.
   c. One source of fine aggregate.
   d. One placing process.

C. Air-entrain Architectural CIP Concrete scheduled for exterior exposure.
1. Maximum water-cement ratio: 0.46 by weight.

D. Uniformity of final surfaces:
1. Unless plaster coat finish or final painting of surfaces is required, maintain designated colors and uniformity of color.

2.6 FORM MATERIALS

A. General:
1. Refer to Section 03 11 00 for general requirements.
2. Comply with the following additional requirements listed below.

B. Form Ties
1. Material: Stainless steel snap ties.

C. Form Sealants:
1. Use non-staining type sealant.

D. Form Facing Materials:
1. General:
   a. As required to reproduce finish on Design Reference Sample.
2. Smooth as-cast finish:
   a. Use smooth forms, liner sheets, or prefabricated panels, true to line, in order that surfaces produced will require little dressing to arrive at true surfaces.

2.7 FABRICATION - FORMS

A. General:
1. Refer to Section 03 11 00 for general requirements.
2. Comply with the following additional requirements listed below.

B. Design:
1. Design forms to produce required finish or finishes.
2. Limit defection of facing materials between studs as well as deflection of studs and walers to 0.0025 times span, or as otherwise indicated.
3. Design forms to permit easy removal.
4. Use only wooden wedges.

C. Secure liner panels in forms by cementing or stapling, but not by methods which will permit impressions of nail heads, screw heads, washers, or like to be imparted to surface of concrete.

D. Seal edges of liner panels to prevent bleeding of grout.

PART 3 - EXECUTION

3.1 FORM WORK

A. Do not reuse forms if there is any evidence of surface wear or defect which would impair quality of surface.
   1. Thoroughly clean and properly coat forms before reuse.

B. Observe formwork continuously while concrete is being placed to see that there are no deviations from desired elevation, alignment, plumb, or camber.
   1. If during construction any weakness develops and false work shows undue settlement or distortion, stop work and remove affected construction if permanently damaged.
   2. Strengthen false work.

3.2 PLACING OF CONCRETE

A. Comply with general requirements specified in Section 03 31 10.

B. Where a smooth rubbed or similar finish is required, work coarse aggregate back from forms, leaving a full surface of mortar avoiding production of surface voids.

C. Do not allow vibrators to contact formwork for exposed concrete surfaces.

D. Consolidate concrete by vibrating the forms or by other approved methods that produce an acceptable finish.

3.3 REMOVAL OF FORMS

A. Comply with general requirements specified in Section 03 31 10.

B. Do not pry against face of concrete.

C. Repair finish defects including form seam marks, fins, projections, large air bubbles, bug-holes etc.

3.4 FINISHES

A. General:
   1. Comply with general requirements specified in Section 03 35 00.
   2. Surfaces exposed to construction activity will be protected in place to prevent any alteration in the concrete appearance.
   3. Finished faces: Free of joint marks, grain, and other obvious defects.
   4. Corners: Uniform, straight and sharp.

B. Exposed Face and Edge Surfaces:
   1. Provide uniform color and texture for vertical and horizontal surfaces to match approved mock-up.

3.5 PATCHING FINISHES

A. General:
   1. Total patched area may not exceed 1 in 500 of surface.
      a. This is in addition to form tie patches, if ties are permitted to fall within as-cast areas.
   2. Closely match color and texture of surrounding surfaces.
      a. Determine mix formula for patching mortar by trial to obtain a good color match with concrete when both patch and concrete are cured and dry.
      b. After initial set, dress surfaces of patches manually to obtain same texture as surrounding surfaces.

3.6 CURING PATCHES

A. Cure patches in architectural concrete surface for 7 days.
   1. Protect from premature drying.

PART 4 - MEASUREMENT AND PAYMENT

A. Refer to Section 01 22 00, Part 4, regarding measure and payment.

B. Work of this Section is considered incidental to work under other payment items and no separate measurement and payment will be made to the Contractor for Work of this Section. Work of this section shall include furnishing all labor, materials, tools, equipment, supplies, supervision, and incidentals necessary as described by the Contract Documents.

END OF SECTION

This page intentionally left blank.

SECTION 03 35 00
CONCRETE FINISHING AND REPAIR OF SURFACE DEFECTS

PART 1 - GENERAL

1.1 SUMMARY

A. Furnish all labor, materials, tools, equipment, and services for Concrete Finishing and Repair of Surface Defects, as indicated, in accordance with provisions of Contract Documents.

B. Completely coordinate with work of other trades.

1.2 QUALITY ASSURANCE

A. Floor finish tolerances:
   1. Follow F-Number System as defined in ASTM E1155.
      a. Floor Flatness F-Number: Ff defines maximum floor curvature allowed over 24 IN computed on basis of successive 12 IN elevation differentials.
      b. Floor Levelness F-Number: Fl defines relative conformity of floor surface to a horizontal plane measured over a 10 FT distance.
      c. Above number pair to be stated in form: Ff/Fl.
      d. Specified overall value is enumerated and is based on composite of all measured valves in a placement.
      e. Minimum local valve (MLV) describes flatness or levelness below which repair or replacement is required. MLV is based on individual placement and applies to minimum local area not crossing construction or control joints.

B. Trial concrete panels:
   1. Provide trial panels to permit evaluation of finishing properties and appearance of concrete proposed for use.
   2. Panels size: 8 x 8 FT, of specified thickness, and made with specified materials and proportions, using equipment and personnel comparable with those to be employed on work.
   3. Demonstrate concrete capable of being finished at a slump not exceeding that specified.
   4. Construct panels and secure approval prior to proceeding with finish in specified location.
   5. Approved panels shall serve as standards by which corresponding finishes in structure will be accepted or rejected.
   6. Construct panels at approved location, not as part of structure. Protect from construction operations, weather, and damage until acceptance of completed concrete work. Remove from site when directed.
      a. Provide one 2 IN thick approved panel for each slab finish specified. Panel(s) shall be on grade.
      b. Provide one 2 IN thick approved panel for smooth form finish. Panel shall be vertical.

PART 2 - PRODUCTS

2.1 MATERIALS

A. Bonding agent: Approximately one (1) part Portland cement to one (1) part fine sand passing a No.30 mesh sieve. Mix to consistency of thick cream.

B. Patching compound: Same materials and approximately same proportions as used for concrete, except omit coarse aggregate. Shall consist of not more than one (1) part Portland cement to two and one half (2-1/2) parts sand loose volume. For exposed concrete, part of Portland cement shall be white to produce a color matching color of surrounding concrete, as determined by a trial patch. Add no more water than necessary for handling and placing. Mix compound in advance and allow to stand with frequent manipulation, without addition of water, until it has reached stiffest consistency that will permit placing.

C. Grout for grout cleaned rubbed finish: Mix one (1) part Portland cement and one and one-half (1-1/2) parts fine sand with sufficient water to produce a grout with a consistency of thick paint.

D. Grout for cork floated rubbed finish: Mix one (1) part Portland cement and one (1) part fine sand with sufficient water to produce a stiff grout.

E. Proprietary materials: At Contractor's option, proprietary compounds for adhesion, patching, or finishing may be used in lieu of or in addition to foregoing grouts. Use such compounds in accordance with manufacturer's recommendations.

PART 3 - EXECUTION

3.1 FINISHING - GENERAL

A. After removal of forms, repair and give surfaces of concrete finishes indicated.
   1. Top surface of slabs not included.

B. Unspecified finish: If finish is not designated, use following finishes as applicable:
   1. Unpainted concrete surfaces not exposed to public view: Rough form finish.
   2. Unpainted concrete surfaces exposed to public view: Smooth form finish.
   3. Concrete surfaces to receive paint: Grout cleaned rubbed finish.
   4. Unformed surfaces (except slabs): As indicated.
   5. Concrete surfaces to be waterproofed in Section 07 14 13 and Section 07 14 16: Smooth form finish.

3.2 REPAIR OF SURFACE DEFECTS

A. Repair surface defects immediately after form removal. Remove honeycombed and other defective concrete down to sound concrete. Chip if necessary to make edges perpendicular to surface or slightly undercut. No feather edges will be permitted. Dampen area to be patched and an area at least 6 IN wide surrounding it to prevent absorption of water from patching compound. After surface water has evaporated from area to be patched, brush bonding agent into surface. When bonding agent begins to lose water sheen, apply patching compound. Thoroughly consolidate compound into place and strike off so as to leave patch slightly higher than surrounding surface. To permit initial shrinkage, leave undisturbed for at least 1 HR before final finish. Keep patched area damp for 7 days. Do not use metal tools in finishing a patch which will be exposed.

B. Tie holes: Unless stainless steel, non-corrosive, or acceptably coated ties are used, tie holes shall be filled. Clean and thoroughly dampen tie holes; fill solid with patching compound.

3.3 AS-CAST FINISHES

A. Rough form finish: No selected form facing materials are specified for rough form finish surfaces. Concrete surfaces must conform to tolerances in Section 03 11 00 "Concrete Formwork." Patch defects and tie holes. Chip or ruboff fins exceeding 1/4 IN in height. Otherwise, leave surfaces with texture imparted by forms.

B. Smooth form finish: Use form facing material to produce a smooth, hard, uniform texture on concrete. It may be plastic coated plywood, metal, plastic liners, or other approved material capable of producing desired finish. Arrange facing material orderly and symmetrical, with number of seams kept to practical minimum. Support by studs or other backing capable of preventing excessive deflection. Do not use material with raised grain, patches, or other defects which will impair texture of concrete surface.
   1. Patch tie holes and defects. Remove fins completely.
   2. When surface texture is impaired and form joints misaligned by more than 1/8 IN grind bushhammer, or correct affected concrete as directed by Architect. Slurry grout areas evidencing minor mortar leakage to match adjacent concrete. Repair major mortar leakage as a defective area.

C. Special architecture finish: Produce finish in accord with requirements of Section 03 33 00, Architectural Concrete.

D. Finishing of related unformed surfaces: (Except Slabs).
   1. Strike smooth tops of walls or buttresses, horizontal offsets, and similar unformed surfaces occurring adjacent to formed surfaces after concrete is placed.
   2. Float to a texture reasonably consistent with that of formed surfaces.
   3. Continue final treatment on formed surfaces uniformly across unformed surfaces.

3.4 SLAB FINISHING

A. General:
   1. Place slabs to finish tolerances specified.
   2. Slab finish: Use following finishes at building locations noted.
      a. Scratched finish: Surfaces intended to receive bonded applied cementitious applications, such as setting beds, grout, etc.
      b. Floated finish (magnesium):
         1) Surfaces intended to receive roofing, waterproofing membranes, or sand bed terrazzo.
         2) Surfaces of ramps, docks, stairs in which no other covering is specified.
      c. Troweled finish:
         1) Floors intended as walking surfaces or to receive floor coverings.
      d. Non-slip finish (interior and exterior): Ramps, docks, stairs specifically noted on drawings.

B. Finishing tolerances:
   1. For shored construction, measurements for conformance with finishing tolerances shall be made as soon as slab can tolerate foot traffic, and before shores are removed.
   2. The Fl levelness tolerance is not applicable to unshored form work such as cast in place topping on prestressed tees, slabs on unshored steel and metal deck, or unshored-postensioned slabs on steel beams.
   3. Horizontal finishes will be accepted provided:
      a. Applicable specification requirements are satisfied.
      b. Water does not pond in areas sloped to drain.
      c. Floor finish tolerances Ff/Fl conforms to that specified for particular finish and minimum local valves are not less than 75 percent of the floor finish tolerance specified.
   4. Accumulated deviation from intended true plane of finished surface does not exceed 1 IN.
   5. Accuracy of floor finish does not adversely affect installation and operation of movable equipment, floor supported items or items fitted to floor (doors, tracks, etc.).

C. Finishes:
   1. Scratched finish: After concrete has been placed, consolidated, struck off, and leveled to a Ff15/Fl13 tolerance, roughen surface with stiff brushes or rakes before final set.

2. Floated finish: After concrete has been placed, consolidated, struck off, and leveled, do not work further until ready for floating. Using a magnesium float, begin floating when water sheen has disappeared and surface has stiffened sufficiently to permit operation. During or after first floating, check planeness of entire surface with a 10 FT straightedge applied at not less than two different angles. Cut down high spots and fill low spots during this procedure to produce a surface within Ff20/Fl15 tolerance throughout. Refloat slab immediately to a uniform sandy texture.
3. Troweled finish: First float-finish surface. Next power trowel, and finally hand trowel. First troweling after power floating shall produce a smooth surface which is relatively free of defects but which may still indicate some trowel marks. Perform additional trowelings by hand after surface has hardened sufficiently. Final trowel when a ringing sound is produced as trowel is moved over surface. Thoroughly consolidate surface by hand troweling. Leave finished surface essentially free of trowel marks, uniform in texture and appearance and plane to an Ff25/Fl20 tolerance. On surfaces intended to receive floor coverings, grind off defects which would indicate through floor covering. On surfaces intended to receive waterproofing membranes grind off defects that might tear or otherwise damage membrane.
4. Broom or belt finish: Immediately after concrete has received float finish, give it a coarse scored texture by drawing a broom or burlap belt across surface transverse to slope or traffic flow.
5. Non-slip slab finish:
   a. Aggregate: Crushed ceramically bonded aluminum oxide particles. Apply at 25 LB per 100 SF.
   b. Blend aggregate with Portland cement in proportions recommended by manufacturer of aggregate.
   c. Give surface a float finish.
   d. Apply approximately two-thirds of blended material for required coverage to surface by a method that ensures even coverage without segregation. Begin floating immediately.
   e. After material has been embedded by floating, apply remainder of blended material to surface at right angles to previous application. Make second application heavier in areas not sufficiently covered by first application. Follow with second floating immediately.
   f. After selected material has been embedded by two floatings, complete operation with a broomed finish.

PART 4 - MEASUREMENT AND PAYMENT

A. Refer to Section 01 22 00, Part 4, regarding measure and payment.

B. Work of this Section is considered incidental to work under other payment items and no separate measurement and payment will be made to the Contractor for Work of this Section. Work of this section shall include furnishing all labor, materials, tools, equipment, supplies, supervision, and incidentals necessary as described by the Contract Documents.

END OF SECTION

SECTION 04 05 10
MASONRY CLEANING

PART 1 - GENERAL

1.1 SUMMARY

A. Furnish all labor, materials, tools, equipment, and services for Masonry Cleaning, as indicated, in accordance with provisions of Contract Documents.

B. Completely coordinate with work of other trades.

1.2 SUBMITTALS

A. Project Information:
   1. Name of proposed product and manufacturer.
   2. Certification that the proposed product(s) are compatible for materials on subject project.

PART 2 - PRODUCTS

2.1 ACCEPTABLE MANUFACTURERS

A. Cleaners:
   1. Base:
      a. ProSoCo.
   2. Optional:
      a. EaCo Chem.

B. Other manufacturers desiring approval comply with Section 00 26 00.

2.2 MATERIALS

A. General:
   1. Do not use products which are not recommended by manufacturer of material to be cleaned.

B. Cast-in-Place Concrete Cleaner:
   1. General:
      a. Clean all Cast-in-Place concrete walls which will remain exposed to view (including CIP walls which are scheduled for painting).
      b. Clean with most effective products which are appropriate for texture(s) and color(s) specified.
   2. Sandblasted, Etched, and Exposed-aggregate Textures:
      a. Base Product: “Sure Klean Custom Masonry Cleaner” or “Heavy-duty Concrete Cleaner” both by ProSoCo.

PART 3 - EXECUTION

3.1 INSPECTION

A. Examine surfaces to be cleaned.
   1. If necessary point with mortar.

B. Waiting Time before cleaning:
   1. Mortar Type N: Allow mortar to cure for 14 to 28 days prior to cleaning.
   2. Mortar Types M and S: Allow mortar to cure for 7 to 14 days prior to cleaning.
   3. Colored Mortar, all strengths: Allow mortar to fully cure 28 days prior to cleaning.

C. Remove excess mortar using wooden paddles and scrapers.

D. Do not proceed with cleaning until unsatisfactory conditions have been corrected.

E. Test 4 x 4 FT area of each surface type for compatibility with cleaner, using recommended dilutions, prior to full scale cleaning operations.

F. Cleaning indicates acceptance of surfaces and responsibility for performance.

3.2 PREPARATION

A. Protect adjacent surfaces, not scheduled for cleaning.

B. Prepare surfaces as recommended by manufacturer.

3.3 CLEANING

A. Clean surfaces as recommended by manufacturer.

B. Do not use wire brushes.

C. If metal tools are used, use only tools free of rust.

D. Thoroughly rinse and pre-soak walls.

E. Flush loose mortar and dirt from surface.

F. Wet to prevent "runoff" streaking.

G. Apply solution using fibered wall washing brush or low-pressure spray.
   1. Maximum Pressure: not to exceed 400 PSI.
   2. Tip spray angle: Not less than 25 Degrees.
   3. Maximum rate of flow: 4 to 6 GPM.
   4. Tip shall be held at least 12 IN from surface of masonry.
   5. Comply with manufacturer's recommendations, where more restrictive.

H. Scrape off mortar and re-apply cleaning solution.

I. After scrubbing, clean thoroughly with low pressure water.
   1. Comply with low-pressure spray criteria listed above.

PART 4 - MEASUREMENT AND PAYMENT

A. Refer to Section 01 22 00, Part 4, regarding measure and payment.

B. Work of this Section is considered incidental to work under other payment items and no separate measurement and payment will be made to the Contractor for Work of this Section. Work of this section shall include furnishing all labor, materials, tools, equipment, supplies, supervision, and incidentals necessary as described by the Contract Documents.

END OF SECTION

SECTION 05 05 05
GALVANIC CORROSION PROTECTION

PART 1 - GENERAL

1.1 SUMMARY

A. Furnish all labor, materials, tools, equipment, and services for Galvanic Corrosion Protection, as indicated, in accordance with provisions of Contract Documents.

B. Use information in this Section to coordinate, select and apply products listed in other Sections for purposes of Galvanic Corrosion Protection.

C. Completely coordinate with work of other trades.

1.2 QUALITY ASSURANCE

A. Provide galvanic corrosion protection:
   1. Appendix C, SMACNA Sheet Metal Manual –6th. Edition.
   2. ASTM G82 and ASTM STP576.

1.3 GALVANIC CORROSION POTENTIAL

A. Galvanic Scale: Less Noble, electropositive or anodic metals which corrode more readily are at top of scale. Those that are more electronegative or cathodic, Noble, are at bottom of scale.

GALVANIC SCALE
Anodic / Corroded End / Less Noble Materials
Zinc
Aluminum
Galvanized Steel
Cadmium
Mild Steel / Wrought Iron
Cast Iron
Stainless Steel, Types 304 & 316 (active)
Lead-tin Solder
Lead
Brass / Bronze
Copper
Stainless Steel, Types 304 & 316 (Passive)
Cathodic / Protected End / Noble Materials

PART 2 - PRODUCTS – NOT USED

PART 3 - EXECUTION

3.1 INSTALLATION

A. Avoid contact between metals that are not adjacent in the scale.

B. Do not couple a small exposed area of a less noble material with a large area of a more noble material.

C. Coat noble metal with a suitable paint or other non-metallic coating or coat both surfaces at their interface with zinc chromate or bituminous coating.

D. Separate the metals by tape, gasket, waterproof paper, elastomeric sheet, sealant or other non-absorptive, non-conductive material.

E. Do not allow moisture run-off from noble material to drain onto less noble material.

F. Do not use copper nails for fastening galvanized steel roof panels .

G. Do not use galvanized steel nails on copper roofing.

H. Do not use galvanized bolts, nuts or washers on stainless steel components.

3.2 METALS EMBEDDED IN CONCRETE

A. Hot-dip galvanized with bituminous paint.
   1. Use at exterior and interior areas exposed to weather or high humidity.

B. Non-galvanized steel with bituminous paint:
   1. Use at interior areas with low or ordinary humidity.
   2. Avoid direct embedment where exposed to weather or high humidity.

C. Aluminum:
   1. Avoid direct embedment where exposed to weather or high humidity.
   2. Use of uncoated or uncovered aluminum in structural concrete is prohibited.
   3. Use of water or admixtures with deleterious amounts of chloride ions when aluminum is embedded in concrete is prohibited.

PART 4 - MEASUREMENT AND PAYMENT

A. Refer to Section 01 22 00, Part 4, regarding measure and payment.

B. Work of this Section is considered incidental to work under other payment items and no separate measurement and payment will be made to the Contractor for Work of this Section. Work of this section shall include furnishing all labor, materials, tools, equipment, supplies, supervision, and incidentals necessary as described by the Contract Documents.

END OF SECTION

SECTION 05 12 10
STRUCTURAL STEEL

PART 1 - GENERAL

1.1 SUMMARY

A. Furnish all labor, materials, tools, equipment, and services for Structural Steel, as indicated, in accordance with provisions of Contract Documents.

B. Completely coordinate with work of other trades.

1.2 QUALITY ASSURANCE

A. Structural steel work covered herein shall be fabrication and erection of steel framing and bracing members including connections and steel material either supporting or connected to steel members shown on structural plans and not specified in other sections.

B. Quality standards latest edition of the following standards plus any corresponding published revisions at the time of bidding shall be the applicable standard. The Local Building Code shall govern when conflicts occur.
   1. Local Building Code.
   2. American Institute of Steel Construction (AISC):
      a. ANSI/AISC 360 "Specification for Structural Steel Buildings" (referred to herein as the AISC Specification).
      b. Code of Standard Practice for Steel Buildings and Bridges (referred to as AISC Code of Standard Practice).
      c. Quality Certification Program.
   3. American Welding Society:
      a. Structural Welding Code - Steel ANSI/AWS-D1.1 (referred to herein as the AWS Code). The AWS Code shall govern the techniques and quality of welding and testing procedures. Statements contained in the AWS Code requiring information to Bidders and/or Contract Documents to define nondestructive testing or statements defining responsibilities and obligations for services and payment shall be disregarded.
   4. Research Council on Structural Connections: "Specifications for Structural Joints Using High Strength Bolts" (referred to herein as the RCSC Specification).
   5. Steel Structures Painting Council (SSPC): Steel Structures Painting Manual Vol. 2, "System and Specifications" (referred to herein as the SSPC Specification).

C. Qualifications:
   1. Steel fabricator:
      a. Certified by AISC Quality Certification Program for Structural Steel Fabricators and is designated as AISC Certified Fabricator, Standard for Steel Building Structures.
      b. Fabricators not certified shall have minimum 10 years experience and shall employ an approved testing agency to inspect fabrication work performed off site. The testing agency shall furnish weekly inspection reports and a final report to the Building Official and the Architect certifying the work was performed in accordance with the specifications and approved shop drawings.
   2. Steel erector:
      a. Minimum 10 years experience in erection of structural steel.
      b. Certified as Certified Steel Erector by AISC quality Certification Program.
   3. Certification by other equivalent programs subject to approval of the Structural Engineer.

D. Source quality control:
   1. Provide access and facilities for testing agency during shop and field inspections.

E. Testing and inspection: Testing, (except testing to qualify welders and as needed for Contractor's own quality control), will be performed at no cost to Contractor by a Testing/Inspection Agency employed by Owner. Owner's Testing/Inspection Agency may use nondestructive testing methods in addition to visual inspection to verify weld quality. Repair rejected welds as directed by Testing/ Inspection Agency at no additional cost to Owner.

F. Provide testing and inspection agency with sufficient notification and access so that inspection and testing can be accomplished.

G. Previous acceptance of material or finished members by testing and inspection agency or Architect/Engineer shall not prevent its rejection at later date if it does not comply with specifications.

H. Tolerances:
   1. Rolling: ASTM-A6.
   2. Fabrication and Erection tolerances: AISC Code of Standard Practice.

1.3 SUBMITTALS

A. Shop Drawings:
   1. Indicate details including cuts, copes, connections, holes and welds. Indicate shop and field welds using AWS symbols. Indicate connections where high strength bolts are required.

B. Product Data:
   1. Source and certification of quality for high-strength bolts, nuts and washers.
   2. Technical data on base plate grout.

C. Project Information:
   1. Fabricator's AISC Certification or name of independent testing agency for use by non-certified fabricator along with proof that fabricator has 10 years experience in fabrication of structural steel for buildings.
   2. Inspection reports and certification of shop fabrication by independent testing laboratory for non-certified fabricator.
   3. Steel erector's AISC Certification or proof that steel erector has 10 years experience in erection of structural steel.
   4. Welding Procedure Specification (WPS) for shop and field welds.

D. Contract closeout information:
   1. Certificate by fabricator that steel was fabricated in accordance with the approved construction documents.
   2. Certificate by erector that steel was erected in accordance with the approved erection plans and specifications.

PART 2 - PRODUCTS

2.1 MATERIALS

A. Steel, structural "W" shapes and tee's: ASTM A992 (50 ksi yield point).

B. Other steel shapes and plate: ASTM A36.

C. Pipe round: ASTM A53, Grade-B.

D. Tubing square or rectangular: ASTM A500, Grade-B (46 KSI minimum).

E. Bolts, nuts, and washers, high-strength. Conform to RCSC Specification
   1. Twist off style, conform to ASTM F1852
      a. Approved bolts:
         1) Tension control bolt by LeJeune Bolt Company, Burnsville, MN.
         2) Tru-Tension Fasteners by Nucor Fastener a Division of Nucor Corporation, St. Joe, Indiana.

3) Lohr Fasteners by Lohr Structural Fasteners, Humble, TX.

F. Bolts, nuts and washers, standard strength:
   1. Bolts: ASTM A307, Type A.
   2. Nuts: ASTM A563.
   3. Washers plain: ANSI/ASME-B18.22.1.

G. Anchor bolts, high-strength:
   1. Bolts or rod for threading: ASTM F1554-105 ksi. meeting supplementary requirement S4. Pretension to load indicated on plans.
   2. Nuts, heavy hex: ASTM-A563.
      a. Up to 1 1/2 IN diameter: Grade D hex
      b. Over 1-1/2 IN diameter: grade DH Heavy Hex.
   3. Washers:
      a. Hardened Steel: ASTM F436 type 1
      b. Load indicator type: Direct Tension Indicating Washers as manufactured by TurnaSure LLC of Langhorne, PA or approved equal, Install per manufacturers recommendations
   4. Thread tolerance: ANSI/ASME-B18.1, Class 2A.

H. Anchor bolts, standard strength:
   1. Bolts or rod for threading: ASTM F1554-36 ksi.
   2. Nuts and washers:
      a. Nuts: ASTM A563.
      b. Washers plain: ANSI/ASME-B18.22.1.
   3. Thread tolerance: ANSI/ASME-B18.1, Class 2A.

I. Welding electrodes:
   1. Shielded metal-arc: AWS A5.1 or AWS A5.5, E70XX
   2. Submerged-arc: AWS A5.17 or A5.23, F7X-EXXX.
   3. Gas metal-arc: AWS A5.18, ER70S-X.
   4. Flux cored-arc: AWS A5.20, E70T-X (except 2, 3, 10, GS).

J. Headed studs and deformed bar anchors:
   1. Headed studs (HS)
      a. Fabricated form cold drawn bar stock conforming to ASTM A 29, grades 1010 through 1020.
      b. AWS D1.1 type B.
      c. Minimum Yield strength: 51 ksi.
      d. Minimum tensile strength: 65 ksi over 3/8 IN diameter.
      e. Minimum tensile strength: 55 ksi 3/8 IN diameter and under.
   2. Deformed anchor bars (DBA): Straight, unless otherwise indicated.
      a. ASTM A496.
      b. Minimum yield strength: 70 ksi.
      c. Minimum tensile strength: 80 ksi.

K. Grout: Pourable.
   1. "Duragrout" as manufactured by L&M Construction Chemicals, or equal.
   2. Minimum Strength : 4000 PSI at 7 days and 8000 PSI at 28 days.

L. Expansion anchors:
   1. Expansion anchors shall be a single-end expansion shield anchor which complies with the descriptive part of Federal Specification FF-S325, Group II, Type 4, Class 1 for concrete expansion anchors. Anchors shall be Hilti Kwik Bolt TZ Expansion anchor by Hilti fastening systems of Tulsa, OK (ICC Report No. ESR-1917) or equal.

M. Adhesive anchors:
   1. Threaded rods, bolts, etc., indicated as adhesive anchors into concrete or solid masonry:
      a. HIT HY-150 MAX - SD adhesive by Hilti Fastening Systems of Tulsa, OK (ICC Report No. ESR-3013) or equal.

b. Unless indicated otherwise, adhesive anchor bolt shall conform to HAS - E Standard ISO Class 5.8 by Hilti or equal. Do not field cut rods without engineer's approval.

2.2 FABRICATION

A. General:
1. Fabricate and assemble material in shop to greatest extent possible.
2. Use A325 bolts, twist-off type, unless otherwise indicated.
3. One sided or other types of eccentric connections not indicated, will not be permitted without prior approval.
4. Bevels for field welds may be flame cut provided such cutting is done automatically. Leave free of burrs and slag.
5. Grind flush web fillets at webs notched to receive backup plates for flange groove welds.
6. Flame cut edges of stiffener plates at field or shop butt welds. Do not shear.
7. Accurately mill bearing ends of columns.
8. Trusses, beams and girders over 50 FT in length shall be cambered in an amount required by the Architect. Members less than 50 FT in length shall be cambered when indicated on the drawings or otherwise fabricate such that after erection any natural camber due to rolling or assembly is upward.
9. Cut, drill, or punch holes at right angles to surface of metal.
   a. Do not make or enlarge holes by burning.
   b. Make holes clean cut, without torn or ragged edges.
   c. Remove outside burrs resulting from drilling or reaming operations with tool making 1/16 IN bevel.
   d. Provide holes in members to permit connection of work of other trades.
10. Make allowance for draw in of tension bracing.
11. Make splices only as indicated.
12. Headed stud type shear connectors (H.S.) and deformed bar anchors (D.B.A.), on Drawings: Automatically end welded in accordance with AWS Code.
    a. When headed stud type shear connectors are to be either shop or field applied, clean top surface of beam flanges in shop to remove oil, scale, rust, dirt and other materials injurious to satisfactory welding.
    b. Fillet welding of headed studs and deformed anchors is not allowed without prior approval.
    c. Do not weld studs when temperature is below 0 degF or surface is wet with rain or snow.
    d. After welding, remove ceramic ferrules and maintain clean and free from substances which would interfere with function as anchor or bond of deformed anchor bars.
    e. Quality control: Weld minimum of 2 studs at start of each production period to determine proper generator, control unit, and stud welder settings.
       1) These studs shall be capable of being bent 45 degrees from vertical without weld failure. These studs shall not be included as a part of the required construction.
       2) All production studs shall be sounded by a sharp blow with a hammer.
       3) If, after welding, a stud does not ring when struck by a hammer or visual inspection reveals that sound weld or full 360 degree fillet has not been obtained for a particular stud, that stud shall be struck with hammer and bent approximately 15 degrees off perpendicular to nearest end of beam.
       4) Studs meeting this test shall be considered acceptable and shall be left in this position.
       5) Studs bent beyond 15 degrees shall be considered ineffective and replaced.
       6) Studs failing under this test shall be replaced.

B. Welding:
1. Welding, techniques of welding employed, appearance and quality of welds, and methods used to correct defective work shall comply with AWS Code, and requirements indicated.
2. Test and qualify welding operators and tackers in compliance with AWS Code for position and type of welding to which they will be assigned.

a. Conduct tests in presence of approved testing agency.
b. Certification within last 12 months from a welding inspector will be acceptable provided samples of welder's work are satisfactory.
c. At discretion of testing agency, shop personnel continuously employed at welding process for which they have been qualified may be accepted from older qualification tests.

3. Qualify joint welding procedures or test in accordance with AWS qualification procedures.
4. Before start of welding work, meet with testing agency and welders to review and verify procedures.
5. Comply with AWS Code to minimize shrinkage and distortion stress.
6. Use back-up plates in accordance with AWS Code, extending minimum of 1 IN either side of joint.
7. Make flange welds before making web welds.
8. For manual shielded metal-arc welding: Comply with Article 4.6 of AWS Code.
9. Low hydrogen electrodes: Dry and store electrodes in compliance with AWS Code.
10. Do not perform welding when ambient temperature is lower than 0 degF, or where surfaces are wet or exposed to rain, snow, or high wind, or when welders are exposed to inclement conditions.
11. Before starting welding:
    a. Carefully plumb and align members.
    b. Fully tighten bolts.
    c. Assembly and surface preparation shall comply with AWS Code.
    d. Preheat base metal to temperature stated in AWS Code.
        1) When no preheat temperature is given and base metal is below 32 degF, preheat base metal to at least 70 degF.
        2) Maintain temperature during welding.
        3) Preheating shall bring surface of base metal within distance from point of welding equal to thickness of thicker part being welded or 3 IN, whichever is greater, to specified preheat temperature.
        4) Maintain this temperature during welding.
    e. Each welder is to provide identifying mark at welds worked on.

2.3 SURFACE PREPARATION AND SHOP-APPLIED COATINGS

A. Surfaces not to be coated:
1. Do not coat following surfaces:
    a. Surfaces to be fireproofed with spray-on material.
    b. Machined surfaces, surfaces adjacent to field welds, contact surfaces of bolt connections where connection is specified as slip critical, and top of top flanges of beams.
    c. Other members for which no coating is specified.
2. Clean thoroughly before shipping; remove loose mill scale, rust, dirt, oil and grease.

B. Hot-dip Galvanized (HDG) members:
1. Galvanize following members:
    a. Members set in, or in contact with, exterior surface material, including:
        1) Brick ledge angles.
        2) Embedded items in exterior surfaces.
    b. Exterior exposed structure not indicated to be shop otherwise shop finished.
    c. Other members indicated.
2. Clean thoroughly before galvanizing.
3. Galvanize in accordance with ASTM A123.

PART 3 - EXECUTION

3.1 ERECTION

A. Safety:
   1. Contractor is solely responsible for safety. Construction means and methods and sequencing of work is the prerogative of the Contractor.

B. Capacity of partially complete construction:
   1. Consider that full structural capacity of many structural members is not realized until structural assembly is complete; That is, until slabs, decks and diagonal braces are installed. Partially complete structural members shall not be loaded out of sequence without an investigation.
   2. Until elements of the permanent lateral bracing system of the structure are complete, temporary lateral bracing for the partially complete structure will be required.

C. Temporary bracing:
   1. Adequate temporary bracing to provide stability and resist loads to which the partially complete structure may be subjected to including construction activities and operation of equipment is the responsibility of the Contractor.
   2. If not obvious from the drawings, confer with the Architect to identify those structural elements that must be complete before the structure's permanent lateral bracing system is effective. The design of the temporary bracing system must consider the sequence and schedule of placement of such elements and effects of loads imposed on the structural steel frame by partially or completely installed work of other trades. Do not remove temporary bracing until the permanent lateral bracing system is effective.

D. General:
   1. Set base and bearing plates accurately and grout immediately as indicated.
      a. Use metal wedges, shims or setting nuts as required.
      b. Pack grout solidly between plate and bearing surface.
   2. Clean bearing and contact surfaces before assembly.

E. Install A325SC bolts with washers. Install and tighten in accordance with the RCSC Specifications or in accordance with manufacturer's instructions when twist-off bolts are used.

F. Field weld as specified in paragraph "Welding."

G. Do not use gas cutting to correct fabrication errors on major members.
   1. Gas cutting on minor members may be permitted when members are not loaded, only after approval by Architect.

H. Tighten and leave in place erection bolts used in welded construction.

I. Provide beveled washers to give full bearing to bolt head or nut where bolts are to be used on surfaces having slopes greater than 1:20 with a plane normal to bolt axis.

J. After installation, touch up damaged or abraded areas of primed steel using same materials used for shop priming.
   1. Clean field welds, bolted connections and abraded areas before touching up.

K. After installation, repair galvanized surfaces damaged or abraded using zinc rich paint in accordance with ASTM A780.
   1. Surfaces to be repaired with paint containing zinc dust shall be clean, dry, and free of oil, grease, preexisting paint, corrosion, and / or rust.
   2. Surfaces to be repaired shall be blast cleaned to the requirements of SPC SP10 (near white). Where circumstances do not allow blast or power tool cleaning to be used, then hand tools may be used. Cleaning shall meet the requirements of SSPC SP2 (removal of loose rust, mil scale, or paint to the degree specified by hand chipping, scraping, sanding and wire brushing)

3. If the areas /surfaces to be repaired include welds, first remove all weld flux residue and weld spatter by blasting, chipping, grinding, or power scaling.
4. Spray or brush apply the paints containing zinc dust to the prepared surfaces/areas. Apply the paint in accordance with the manufacturer's recommendations in a single application employing multiple passes to achieve a dry film thickness equal to the original zinc coating thickness.

PART 4 - MEASUREMENT AND PAYMENT

A. Refer to Section 01 22 00, Part 4, regarding measure and payment.

B. Work of this Section is considered incidental to work under other payment items and no separate measurement and payment will be made to the Contractor for Work of this Section. Work of this section shall include furnishing all labor, materials, tools, equipment, supplies, supervision, and incidentals necessary as described by the Contract Documents.

END OF SECTION

This page intentionally left blank.

SECTION 05 12 13
ARCHITECTURALLY EXPOSED STRUCTURAL STEEL

PART 1 - GENERAL

1.1 SUMMARY

A. Furnish labor, materials, tools, equipment, and services for Architecturally Exposed Structural Steel, as indicated, in accordance with provisions of Contract Documents.

B. Completely coordinate with work of other trades.

1.2 QUALITY ASSURANCE

A. Section covers fabrication and erection requirements in addition to those specified in Section 05 12 10 for structural steel, indicated to be Architecturally Exposed Structural Steel (AESS).

B. Quality standards, qualifications, source quality control and testing and inspection, specified in Section 05 12 10, shall apply to Architecturally Exposed Structural Steel.
   1. Fabricator and erector shall have successfully completed AESS work similar to work indicated for this project.

C. Tolerances: AISC, Code of Standard Practice for Steel Buildings and Bridges, Section 10, or as noted.

D. Final design of connections not defined on Contract Documents as specified in Section 05 12 10.

1.3 PRE-INSTALLATION CONFERENCE

A. Schedule and conduct conference at project site to comply with requirements of Section 01 31 19.
   1. Attendees shall include Contractor, Fabricator, Erector, finish painter.
   2. Topics for discussion shall include coordination requirements for shipping, special handling, attachment of safety cables, temporary erection bracing, and touch-up painting.

1.4 MOCK-UP

A. Submit shop drawings for proposed mock-up sample prior to fabrication.

B. Approved sample shall serve as the basis for acceptance for all AESS assemblies.

C. Mock-up shall include no less than following;
   1. Plate seam.
   2. Butt or miter joint in plate, rolled sections, or both.
   3. Welds required for installation.

1.5 SUBMITTALS

A. Shop Drawings:
   1. Provide erection drawings indicating AESS members.
   2. Details indicating compliance with fabrication and erection requirements, including connections consistent with concepts indicated in drawings.
   3. Indicate welds by standard AWS symbols, distinguishing between shop and field welds, showing size, length and type of each weld, and identifying grinding, finish and profile of each weld.
   4. Indicate bolts by type, size, finish and length, distinguishing between shop and field bolts, identifying high-strength bolted, direct-tensioned shear/bearing connections, and showing which direction bolt heads are to be oriented.
   5. Indicate surfaces and edges exposed and class of surface preparation used.

6. Indicate tolerances and erection requirements as defined in drawings or specified in this section.

B. Product Data:
1. Source and certification of quality for high-strength bolts, nuts and washers.
2. Technical data on base plate grout.

C. Project Information:
1. Fabricator and Erector Qualifications:
   a. List completed project names and addresses, and names and addresses of their Architects and Owners.
   b. Fabricator's AISC certification or name of independent testing agency for use by non-certified fabricator.
   c. Proof fabricator has 10 years experience in fabrication of structural steel for buildings.
   d. Steel erector's AISC Certification or proof that steel erector has 10 years experience in erection of structural steel.
2. Inspection reports and certification of shop fabrication by independent testing laboratory for non-certified fabricator.
3. Connection design calculations.
4. Welding Procedure Specification (WPS) for shop and field welds.

D. Contract Closeout Information:
1. Certificate by fabricator that steel was fabricated in accordance with approved construction documents.
2. Certificate by erector that steel was erected in accordance with approved erection plans and specifications.

PART 2 - MATERIALS

2.1 ARCHITECTURALLY EXPOSED STRUCTURAL STEEL

A. Apply to members open to view.

B. Epoxy filler:
1. Solvent resistant, two component metal and epoxy compound compatible with required protective coating systems.
2. Acceptable product:
   a. Tnemec, 215 Surfacing Epoxy.

C. Primer:
1. As recommended by finish top coat manufacturer for substrate.

2.2 FABRICATION

A. Fabricate and assemble in shop to greatest extent possible.
1. Locate field joints at concealed locations unless otherwise indicated.
2. Detail assemblies to minimize field handling and expedite erection.

B. Fabricate with exposed surfaces smooth, square and with consistent surface quality.

C. Fabrication Tolerance: Fabricate steel to one-half of normal tolerances specified in AISC Code of Standard Practice for Steel Buildings and Bridges, Section 10.

D. Welds:
1. Grind welds smooth.
2. Grove welds: Make flush to surfaces each side to within + 1/16 IN to – 0 IN of plate thickness.
3. Contouring and Blending of Welds: Oversize fillet welds for grinding to smooth transitions.
4. Continuous welds: Uniform size and profile.
5. Minimize weld show-through at locations where welding on far side of exposed connection.

E. Coping and Blocking Tolerance, and Joint Gap Tolerance: Uniform gap of 1/8 IN +/- 1/32 IN.

F. Fabricate each piece such that piece mark is fully hidden in the final structure or made with such media to permit full removal after erection.

G. Steel shall be delivered with no mill marks in exposed locations.
   1. Mill marks shall be omitted by cutting of mill material to appropriate lengths where possible.
   2. Where not possible, fill and grind mark area to a surface consistent with surrounding surface.
   3. Filler caulk, or body putty type materials, other than filler metal deposited by welding process, is not acceptable for remedial work.
   4. Epoxy filler may be applied to pockets, voids, pitting, or other blemishes on exposed surfaces of interior steel to be painted, including welds.

H. All edges of sheared, punched or flame-cut steel shall be ground smooth.

I. Roll members to final curved shape in the shop and tied during shipping to prevent stress relieving.
   1. Distortion of web or stem and of outstanding flanges or legs of angles will be visibly acceptable only if not perceived from a distance of 20 FT under any lighting condition.
   2. Tolerances for vertical and horizontal walls of regular HHS members after rolling shall be specified dimension +/- 1/2 IN.

J. Seal weld ends of round and rectangular hollow structural sections with 3/8 IN thick closure plates, and provide continuous sealed welds at angle to gusset plate connections and similar locations where exposed to weather.

K. Shop Connections: Comply with Section 05 12 10, and for:
   1. Bolt Connections: Provide bolt type and finish and align bolt heads as indicated on approved shop erection drawings.
   2. Weld Connections: Comply with AWS-D1.1, and assemble and weld build-up sections by methods maintaining alignment of members without warp exceeding tolerance specified.

2.3 SHOP PRIMING

A. Shop-prime steel surfaces except surfaces embedded in concrete or mortar, and surfaces to be field welded.
   1. Extend priming of partially embedded members to a depth of 2 IN.

B. Do not prime surfaces to be high-strength bolted with slip-critical connections if primer does not meet specified AISC slip coefficient.

C. Surface Preparation: Clean surfaces to be painted by removing loose rust, loose mill scale, and spatter, slag or flux deposits.
   1. Prepare surfaces concealed by other work minimally according to SSPC-P3 Power Tool Cleaning.
   2. Prepare exterior surfaces minimally according to SSPC-P6 Commercial Blast Cleaning.
   3. Coordinate required blast profile with approved paint submittal prior to beginning surface preparation.

D. Priming:
   1. Apply primer immediately after surface preparation, in accordance with manufacturer's instructions.
   2. Provide a dry film thickness of not less than 2.5 mils and with full coverage of joints, corners, edges and other exposed surfaces.
   3. Stripe paint lap joints, plate edges, corners, crevices, bolts, welds and sharp edges.
   4. Apply two (2) coats of shop primer to surfaces inaccessible after assembly or erection.

2.4 GALVANIZING

A. Where galvanizing is indicated, apply zinc coating by hot-dip process according to ASTM A123.
   1. Fabricate galvanized assemblies for all field connections made by bolted connections.
   2. Provide galvanized finish in consistent color and surface texture throughout.

2.5 FINISH PAINTING

A. Finish painting is specified in Section 09 91 13 for exterior Verify finish painting will be done in the field, or indicate shop finished.

B. Finish painting shall be field applied after erection.

PART 3 - EXECUTION

3.1 EXAMINATION

A. Verify members are free of twist, kinks, gouges or other imperfections which may result in rejection of the appearance of the member.

B. Replace defective members or correct defects.

3.2 PREPARATION

A. Provide connections for temporary shoring, bracing and supports only where indicated on approved shop drawings.

B. Temporary connections not shown on shop drawings shall be made at locations not exposed to view in the final structure.

C. Handle, lift, and align pieces using padded slings and other protection required to maintain appearance of through process of erection.

D. Handle to prevent twisting or warping of members.

3.3 ERECTION

A. Set accurately in locations and to elevations indicated and according to AISC specifications, as specified in Section 05 12 10 and per following:
   1. Erection Tolerances: AISC Code of Standard Practice for Steel Buildings and Bridges Section 7, except Section 10, where AESS is located within 20 FT of personnel.
   2. Provide field welds complying with the same requirements required for welds during fabrication, including grinding for flush finish conditions.
      a. Assemble and weld build-up sections by methods maintaining true alignment of axes without warp.
      b. Verify weld sizes, fabrication sequence and equipment used will limit distortion to acceptable tolerances.
   3. Provide bolting complying with same requirements required for bolting during fabrication, including orientation of bolt heads to same side.
   4. Remove run-out tabs, erection bolts and other steel members added to connections to allow for alignment, fit-up or field welding,
      a. Make remaining surfaces made smooth to match adjacent surfaces.
      b. Holes for erection bolts shall be plug welded and ground smooth.
      c. Holes cut to permit field welding shall be filled by procedures to minimize restraint and thermal stress.
   5. Ream holes to permit bolts; burning and use of drift pins are not allowed.
   6. Replace misaligned connection plates where holes cannot be aligned for acceptable final appearance.
   7. Remove and replace welded material deemed inferior to quality of mock-up.
   8. Repair only when proposed procedures are approved.

3.4 ADJUSTING AND CLEANING

A. Clean and touch-up painting of field welds, bolted connections and abraded areas.
   1. Touch-up priming, painting, or both:
      2. Stripe paint lap joints, plate edges, corners, crevices, bolts, welds and sharp edges as required.
      3. Finish to blend with adjacent surfaces and comply with paint manufacturer's instructions.

B. Galvanized Surfaces: Clean field welds, bolted connections and abraded areas, and repair galvanizing in compliance with ASTM A780.

PART 4 - MEASUREMENT AND PAYMENT

A. Refer to Section 01 22 00, Part 4, regarding measure and payment.

B. Work of this Section is considered incidental to work under other payment items and no separate measurement and payment will be made to the Contractor for Work of this Section. Work of this section shall include furnishing all labor, materials, tools, equipment, supplies, supervision, and incidentals necessary as described by the Contract Documents.

END OF SECTION

This page intentionally left blank.

SECTION 08 71 00

GATE HARDWARE

Part 1 - GENERAL

1.1 RELATED DOCUMENTS

A. Drawings and general provisions of the Contract, including General and Supplementary Conditions and Division 1 Specification Sections, apply to this Section.

1.2 SUMMARY

A. This Section includes ancillary commercial gate hardware for the following:
1. Swinging pedestrian gates
2. Other gates to the extent indicated.

B. Gate hardware includes, but is not necessarily limited to, the following:
1. Mechanical door hardware

C. Electromechanical door hardware, power supplies, back-ups and surge protectionRelated Sections:
1. Section 32 31 16 Welded Wire Fences and Gates.

D. Codes and References: Comply with the version year adopted by the Authority Having Jurisdiction.
1. ANSI A117.1 - Accessible and Usable Buildings and Facilities.
2. ICC/IBC - International Building Code.
3. NFPA 101 - Life Safety Code.
4. State Building Codes, Local Amendments.

E. Standards: All hardware specified herein shall comply with the following industry standards:
1. ANSI/BHMA Certified Product Standards - A156 Series

1.3 SUBMITTALS

A. Product Data: Manufacturer's product data sheets including installation details, material descriptions, dimensions of individual components and profiles, operational descriptions and finishes.

B. Gate Hardware Schedule: Prepared by or under the supervision of supplier, detailing fabrication and assembly of door hardware, as well as procedures and diagrams. Coordinate the final Gate Hardware Schedule with gates, and related work to ensure proper size, thickness, hand, function, and finish of gate hardware.
1. Format: Comply with scheduling sequence and vertical format in DHI's "Sequence and Format for the Hardware Schedule."
2. Organization: Organize the Gate Hardware Schedule into door hardware sets indicating complete designations of every item required for each door or opening. Organize door hardware sets in same order as in the Gate Hardware Sets at the end of Part 3. Submittals that do not follow the same format and order as the Gate Hardware Sets will be rejected and subject to resubmission.
3. Content: Include the following information:
   a. Type, style, function, size, label, hand, and finish of each gate hardware item.
   b. Manufacturer of each item.
   c. Fastenings and other pertinent information.
   d. Location of gate hardware set, cross-referenced to Drawings, both on floor plans and in door and frame schedule.
   e. Explanation of abbreviations, symbols, and codes contained in schedule.
   f. Mounting locations for gate hardware.

C. Operating and Maintenance Manuals: Provide manufacturers operating and maintenance manuals for each item comprising the complete door hardware installation in quantity as required in Division 01, Closeout Submittals. The manual to include the name, address, and contact information of the manufacturers providing the hardware and their nearest service representatives. The final copies delivered after completion of the installation test to include "as built" modifications made during installation, checkout, and acceptance.

D. Warranties and Maintenance: Special warranties and maintenance agreements specified in this Section.

1.4 QUALITY ASSURANCE

A. Source Limitations: Obtain each type and variety of Door Hardware specified in this Section from a single source, qualified supplier unless otherwise indicated.

1. Electrified modifications or enhancements made to a source manufacturer's product line by a secondary or third party source will not be accepted.
2. Provide electromechanical door hardware from the same manufacturer as mechanical door hardware, unless otherwise indicated.

B. Regulatory Requirements: Comply with NFPA 70, NFPA 80, NFPA 101 and ANSI A117.1 requirements and guidelines as directed in the model building code including, but not limited to, the following:

1. NFPA 70 "National Electrical Code", including electrical components, devices, and accessories listed and labeled as defined in Article 100 by a testing agency acceptable to authorities having jurisdiction, and marked for intended use.
2. Where indicated to comply with accessibility requirements, comply with Americans with Disabilities Act (ADA), "Accessibility Guidelines for Buildings and Facilities (ADAAG)," ANSI A117.1 as follows:
   a. Handles, Pulls, Latches, Locks, and other Operating Devices: Shape that is easy to grasp with one hand and does not require tight grasping, tight pinching, or twisting of the wrist.
   b. Door Closers: Comply with the following maximum opening-force requirements indicated:
      1) Interior Hinged Doors: 5 lbf applied perpendicular to door.
      2) Fire Doors: Minimum opening force allowable by authorities having jurisdiction.
3. Thresholds: Not more than 1/2 inch high. Bevel raised thresholds with a slope of not more than 1:2.NFPA 101: Comply with the following for means of egress doors:
   a. Latches, Locks, and Exit Devices: Not more than 15 lbf to release the latch. Locks shall not require the use of a key, tool, or special knowledge for operation.
   b. Thresholds: Not more than 1/2 inch high.
4. Inspect and discuss electrical roughing-in, power supply connections, and other preparatory work performed by other trades.

C. At completion of installation, provide written documentation that components were applied to manufacturer's instructions and recommendations and according to approved schedule.

1.5 DELIVERY, STORAGE, AND HANDLING

A. Inventory gate hardware on receipt and provide secure lock-up and shelving for door hardware delivered to Project site. Do not store electronic access control hardware, software or accessories at Project site without prior authorization.

B. Tag each item or package separately with identification related to the final Gate Hardware Schedule, and include basic installation instructions with each item or package.

C. Deliver, as applicable, permanent keys , access control credentials, and related accessories directly to Owner via registered mail or overnight package service.

1.6 WARRANTY

A. General Warranty: Reference Division 01, General Requirements. Special warranties specified in this Article shall not deprive Owner of other rights Owner may have under other provisions of the Contract Documents and shall be in addition to, and run concurrent with, other warranties made by Contractor under requirements of the Contract Documents.

B. Warranty Period: Written warranty, executed by manufacturer(s), agreeing to repair or replace components of standard and electrified door hardware that fails in materials or workmanship within specified warranty period after final acceptance by the Owner. Failures include, but are not limited to, the following:

1.
2. Faulty operation of the hardware.
3. Deterioration of metals, metal finishes, and other materials beyond normal weathering.
4. Electrical component defects and failures within the systems operation.

C. Standard Warranty Period: One year from date of Substantial Completion, unless otherwise indicated.

1.7 MAINTENANCE SERVICE

A. Continuing Service: Beginning at Substantial Completion, and running concurrent with the specified warranty period, provide continuous (6) months full maintenance including repair and replacement of worn or defective components, lubrication, cleaning, and adjusting as required for proper door opening operation. Provide parts and supplies as used in the manufacture and installation of original products.

Part 2 - PRODUCTS

2.1 SCHEDULED DOOR HARDWARE

A. General: Provide door hardware for each door to comply with requirements in Door Hardware Sets and each referenced section that products are to be supplied under.

1. Designations: Requirements for quantity, item, size, finish or color, grade, function, and other distinctive qualities of each type of door hardware are indicated in the Door Hardware Sets at the end of Part 3. Products are identified by using door hardware designations, as follows:
   a. Named Manufacturer's Products: Product designation and manufacturer are listed for each door hardware type required for the purpose of establishing requirements. Manufacturers' names are abbreviated in the Door Hardware Schedule.

B. Substitutions: Requests for substitution and product approval for inclusive mechanical and electromechanical door hardware in compliance with the specifications must be submitted in writing and in accordance with the procedures and time frames outlined in Division 01, Substitution Procedures. Approval of requests is at the discretion of the architect, owner, and their designated consultants.

2.2 STAND ALONE ACCESS CONTROL LOCKING DEVICES

A. Narrow Stile Access Control Trim: Access control trim for narrow stile door applications. Internal clutch protected locking/unlocking control of the exterior lever handle trim. Field selectable handing with keyed cylinder override access capability.

1. Card reader trim retrofits to Adams Rite MS Series Deadbolts, 4000 Series Deadlatches, and 8000 Series Exit Devices in 31/32" backsets and greater.
2. Acceptable ManufacturersBasis of Design:

a. Adams Rite Manufacturing (AD) - eForce 3090 Series.

2.3 AUXILIARY LOCKS

A. Hidden Shackle Padlock: Heavy-Duty High Security Hidden Shackle Padlock. 3/8" Dia., Boron Alloy –Iron Shrouded Shackle. Solid Steel, 2-3/8" Thick Body, 5 pins, keying per Owner standard.

1. Basis of Design:
   a. MASTER LOCK 6T410 Series.

2.4 DOOR CLOSERS

A. All door closers specified herein shall meet or exceed the following criteria:

1. General: Door closers to be from one manufacturer, matching in design and style, with the same type door preparations and templates regardless of application or spring size. Closers to be non-handed with full sized covers including installation and adjusting information on inside of cover.
2. Closer Arms: Provide heavy duty, forged steel closer arms unless otherwise indicated in Hardware Sets.
   a. Where closers are indicated to have mechanical dead-stop, provide heavy duty arms and brackets with an integral positive stop.
   b. Where closers are indicated to have mechanical hold open, provide heavy duty units with an additional built-in mechanical holder assembly designed to hold open against normal wind and traffic conditions. Holder to be manually selectable to on-off position.
   c. Where closers are indicated to have a cushion-type stop, provide heavy duty arms and brackets with spring stop mechanism to cushion door when opened to maximum degree.
   d. Closers shall not be installed on exterior or corridor side of doors; where possible install closers on door for optimum aesthetics. Provide drop plates or other accessories as required for proper mounting.
3. Closer Accessories: Provide door closer accessories including custom templates, special mounting brackets, spacers and drop plates, and through-bolt or security type fasteners as specified in the door Hardware Sets.

2.5 ELECTRONIC ACCESSORIES

A. Power Supplies: Provide Nationally Recognized Testing Laboratory Listed 12VDC or 24VDC (field selectable) filtered and regulated power supplies. Include battery backup option with integral battery charging capability in addition to operating the DC load in event of line voltage failure. Provide the least number of units, at the appropriate amperage level, sufficient to exceed the required total draw for the specified electrified hardware and access control equipment.

2.6 FINISHES

A. Standard: Designations used in the Hardware Sets and elsewhere indicate hardware finishes complying with ANSI/BHMA A156.18, including coordination with traditional U.S. finishes indicated by certain manufacturers for their products.

B. Provide quality of finish, including thickness of plating or coating (if any), composition, hardness, and other qualities complying with manufacturer's standards, but in no case less than specified by referenced standards for the applicable units of hardware.

C. Protect mechanical finishes on exposed surfaces from damage by applying a strippable, temporary protective covering before shipping.

Part 3 - EXECUTION

3.1 EXAMINATION

A. Examine scheduled openings, with Installer present, for compliance with requirements for installation tolerances, labeled fire door assembly construction, wall and floor construction, and other conditions affecting performance.

3.2 INSTALLATION

A. Install each item of mechanical and electromechanical hardware and access control equipment to comply with manufacturer's written instructions and according to specifications.

1. Installers are to be trained and certified by the manufacturer on the proper installation and adjustment of fire, life safety, and security products including: hanging devices; locking devices; closing devices; and seals.

B. Mounting Heights: Mount door hardware units at heights indicated in following applicable publications, unless specifically indicated or required to comply with governing regulations:

1. Where indicated to comply with accessibility requirements, comply with ANSI A117.1 "Accessibility Guidelines for Buildings and Facilities.".

C. Storage: Provide a secure lock up for hardware delivered to the project but not yet installed. Control the handling and installation of hardware items so that the completion of the work will not be delayed by hardware losses before and after installation.

3.3 FIELD QUALITY CONTROL

A. Field Inspection: Supplier will perform a final inspection of installed door hardware and state in report whether work complies with or deviates from requirements, including whether door hardware is properly installed, operating and adjusted.

3.4 ADJUSTING

A. Initial Adjustment: Adjust and check each operating item of door hardware and each door to ensure proper operation or function of every unit. Replace units that cannot be adjusted to operate as intended. Adjust door control devices to compensate for final operation of heating and ventilating equipment and to comply with referenced accessibility requirements.

3.5 CLEANING AND PROTECTION

A. Protect all hardware stored on construction site in a covered and dry place. Protect exposed hardware installed on doors during the construction phase. Install any and all hardware at the latest possible time frame.

B. Clean adjacent surfaces soiled by door hardware installation.

C. Clean operating items as necessary to restore proper finish. and provide final protection and maintain conditions that ensure door hardware is without damage or deterioration at time of owner occupancy.

3.6 DEMONSTRATION

A. Instruct Owner's maintenance personnel to adjust, operate, and maintain mechanical and electromechanical door hardware.

3.7 DOOR HARDWARE SCHEDULE

A. The hardware sets represent the design intent and direction of the owner and architect. They are a guideline only and should not be considered a detailed hardware schedule. Discrepancies, conflicting hardware and missing items should be brought to the attention of the architect with corrections made prior to the bidding process. Omitted items not included in a hardware set should be scheduled with the appropriate additional hardware required for proper application and functionality.

B. Manufacturer's Abbreviations:

1. ST - Stanley
2. MK - McKinney
3. HD – HID Global
4. RF - Rixson
5. SU - Securitron
6. RO - Rockwood
7. SA - Sargent
8. KA – King Architectural Metals
9. NO – Norton
10. SC - Schlage

Hardware Schedule

Set: 01

Doors: 200, 203 Existing Gates

1 EA	Lockable Extra Heavy Duty 3/4 " Cane Bolt-20"L	30-6020	Galvanized/ Painted	KA

Set: 02

Generator Enclosure Gate

8	Hinge – Surface Weld	BB852 5" x 6"	Painted same as gate	ST
2	Exit Device	43 55 56 8504 LC	US32D	SA
2	Electric Power Transfer	EL-EPT		SU
2	ElectroLynx Harness	QC-C1500P		MK
1	Position Switch	DPS-M-BK	Black	SU
1	FIPS Reader	RP40		HD
1	Mortise Cylinder	20-757 Everest Primus to match Owner's Existing key system	626	SC
2	Checkmate Hold Open	8HD-4-2-6-TORX-8-526	630	RF
2	Lockable Extra Heavy Duty 3/4 " Cane Bolt-20"L	30-6020	Galvanized/ Painted	KA

Notes:
Provide exterior-rated door hardware substitution if the electrified set specified is obsolete or incompatible with the existing security system.
Egress – Free at all times.
Ingress – By key or access credential.
Weld Cane Bolt to door frame per architectural details. Cane Bolts to hold door open during service.

Part 4 - MEASUREMENT AND PAYMENT

A. Refer to Section 01 22 00, Part 4, regarding measure and payment.

B. Work of this Section is considered incidental to work under other payment items and no separate measurement and payment will be made to the Contractor for Work of this Section. Work of this section shall include furnishing all labor, materials, tools, equipment, supplies, supervision, and incidentals necessary as described by the Contract Documents.

END OF SECTION

This page intentionally left blank.

SECTION 05 50 10
MISCELLANEOUS METAL FABRICATIONS

PART 1 - GENERAL

1.1 SUMMARY

A. Furnish labor, materials, tools, equipment, and services for Miscellaneous Metal Fabrications, as indicated, in accordance with provisions of Contract Documents.

B. Completely coordinate with work of other trades.

1.2 QUALITY ASSURANCE

A. Materials and operations standards:
   1. AAMA, Architectural Aluminum Manufacturer's Association.
   2. AISC, American Institute of Steel Construction.
   3. ASTM, American Society for Testing and Materials.
   4. AWS, American Welding Society.
   5. NAAMM, National Association of Architectural Metals Manufacturers.
   6. AISI, American Iron and Steel Institute.

1.3 SUBMITTALS

A. Shop drawings for fabrication and erection of assemblies to include:
   1. Plans and elevations showing all members and connections.
   2. Anchors and accessory items.

PART 2 - PRODUCTS

2.1 ACCEPTABLE MANUFACTURERS

A. Materials listed:
   1. Base: As noted.

B. Galvanizing Repair Paint:
   1. Base:
      a. Tnemec.
   2. Optional:
      a. ZRC Worldwide.
      b. Sherwin-Williams.

C. Shop Primer:
   1. Base:
      a. As recommended by finish coat manufacturer for substrate.
   2. Optional:
      a. Sherwin-Williams.
      b. Tnemec.

D. Non-shrink Grout:
   1. Base:
      a. Dayton Superior Corporation.
   2. Optional:
      a. Sauereisen.
      b. CGM Building Products (Por-Rok).

E. Decorative Bollard Covers:
   1. Base:
      a. Thermoprene.

F. Welded Wire Mesh & U-edging
   1. Base:
      a. McNichols Quality 1 Square Welded Wire Mesh

G. Other manufacturers desiring approval comply with Section 00 26 00.

2.2 MATERIALS

A. Structural steel:
   1. Steel, Structural W shapes and tee's: ASTM–A992 (50ksi yield point)
   2. Other steel shapes and plate: ASTM-A36
   3. Pipe – Round ASTM A53 Grade B
   4. Tubing square or rectangular: ASTM-A500, grade-B (46ksi minimum)

B. Cast steel: ASTM-A27, Grade-65-35; and ASTM-A148, Grade-80-50.

C. Steel forgings: ASTM-A668.

D. Bolts: ASTM-A307, ASTM-A325, ASTM-A354.

E. Filler metal: AWS Standards.

F. Cast iron: ASTM-A48, Class 30, minimum 206 850 kPa 30,000 PSI tensile.

G. Malleable iron: ASTM-A47 and ASTM-A197.

H. Aluminum: ASTM-B308 for particular alloy in standard shapes and extrusions, ASTM-B26 for castings.

I. Stainless steel: ASTM-A484 and ASTM-A276.
   1. Concealed: Type 302 or Type 304.
   2. Exposed: Type 304.
      a. Finish: ASTM-A480 AISI finish #4, unless otherwise indicated.
   3. Exposed: Type 316.
      a. Finish: ASTM-A480 AISI finish #4, unless otherwise indicated.

J. Anchorage devices - masonry:
   1. Standard manufactured items.
   2. Lead expansion shields for machine screws and bolts 1/4 IN and smaller: Head out embedded nut type.
   3. For machine screws and bolts larger than 1/4 IN: Manufacturers' standard.
   4. Bolt anchor expansion shields for lag bolts: Zinc alloy, long shield anchors.
   5. Bolt anchor expansion shields for bolts: Closed end bottom bearing type.
   6. Anchor to embed or set device in setting compound or epoxy grout where shown.

K. Fasteners:
   1. Galvanized or stainless where built into exterior walls.
   2. Select fasteners for type, grade and class required.
   3. Bolts and Nuts: Regular hexagon head ASTM-A307, Grade-A.
   4. Lag Bolts: Square or octagonal head type.
   5. Machine Screws: Cadmium plated steel.
   6. Wood Screws: Flat head carbon steel.
   7. Plain Washers: Round, carbon steel.
   8. Lock Washers: Helical spring carbon steel.

L. Non-shrink grout:
   1. Compressive strength: 48.2 MPa 9000 PSI at 7 days.
   2. Base Product: 1107 Advantage Grout by Dayton Superior.

M. Abrasive warning tape:
   1. Self-adhering, tape with slip resistive mineral surface.
   2. Color: Safety Yellow.
   3. Width: 2 IN, except where noted otherwise.
   4. Tape Type 2:
      a. Base Product: Safety-Walk 530 Conformable by 3M.
      b. Backing: Aluminum foil.
      c. Thickness: 0.035 IN.

N. Welded Wire Mesh:
   1. Square Welded Wire Mesh
   2. 0.0630” Wire
   3. Pre-Galvanized
   4. 88% Open Area
   5. 0.26”/sf
   6. 1” square mesh

O. U-edging
   1. Galvanized Steel
   2. Provide around entire perimeter of Welded Wire Mesh Ceiling.

2.3 FABRICATION

A. Form to shapes indicated with straight lines, sharp angles, and smooth curves.

B. Drill or punch holes with smooth edges for temporary field connections and attachment of work by other trades.

C. Make permanent shop and field connections with continuous fillet type welds.

D. Grind exposed welds smooth.

E. Conceal fastenings where practicable.

F. Shop fabricate in as large assemblies as practicable.

G. Meet requirements specified under Structural Steel for fabricating items of structural nature or use.

H. Qualify welding processes and welding operators in accordance with AWS.

2.4 SURFACE PREPARATION AND SHOP-APPLIED COATINGS

A. Items not to receive coatings:
   1. Surfaces scheduled to be fireproofed with spray-on material.
   2. Machined surfaces.
   3. Surfaces adjacent to field welds.
   4. Contact surfaces of bolt connections at slip connections.
   5. Top flanges of beams to receive shear connectors.
   6. Items for which no coating or field finish is specified.

B. Shop Primer for Interior (non-wet) Items:
   1. Primer: Coordinate with finish systems specified in Section 09 91 23.
   2. Apply primer for interior finish paint to following surfaces not receiving other coating:
      a. Surfaces exposed on interior.
   3. Clean thoroughly before priming; remove mill scale, rust, dirt, oil, and grease in accordance with SSPC-SP3.
   4. Apply in accordance with paint manufacturer’s instructions.
      a. Apply minimum 0.002 IN, dry film thickness.
   5. Finish Paint (applied in field): Specified in Section 09 91 23.

C. Hot-dip Galvanized (HDG) Coating for Exterior items:
   1. Galvanize (HDG) the following items:
      a. Items to be installed on site, roof or other areas that are outside of building enclosure walls. This shall include items "attached to" exterior walls of building.
      b. Items to be installed in wet or humid (>70% RH) areas of building.
      c. Partial listing of items to receive HDG:
         1) Masonry lintels, ledge angles and shelf angles.
         2) Pipe Bollards.
         3) Exterior Ladders, Stairs and railings.
         4) Exterior gratings and substructure.
         5) Exterior equipment supports.
         6) Similar items which are exposed to weather or built-in to Exterior walls.
         7) Other items indicated.
   2. Clean thoroughly before galvanizing.
   3. Galvanize in accordance with ASTM-A123.

D. Galvanizing repair coating:
   1. Tnemec Series 94-H20 Hydro-Zinc.
   2. ZRC Worldwide, Galvilite 221.
   3. Sherwin Williams Zinc Clad III HS 100.

2.5 PAINTING

A. Paint exterior steel items (in field) as Specified in Section 09 91 13.

B. Paint interior steel items (in field) as Specified in Section 09 91 23.

2.6 METAL FABRICATIONS

A. General:
   1. Supply items required to complete construction and installation.
   2. Minimum Workmanship Standards (unless noted otherwise): Class 1 (Architectural) per NAAMM AMP-555, Code of Standard Practice for the Architectural Industry.
   3. Anchorage accessories:
      a. Items required to secure wood to metal, wood to masonry, metals to masonry or concrete, metal to metal or metal to other items.

B. Metal Gratings:
   1. Complying with NAAMM Metal Bar Grating Manual.
   2. Material and Thickness (except were otherwise indicated):
      a. Galvanized steel, nominal 1-1/2 IN thick.
   3. Load Capacity: Support minimum uniform load of 9575 Pa 200 PSF.
   4. Provide hold down clips.
   5. Furnish with frames and support items of comparable material and finish.

C. Steel Support Angles, Members and Loose Lintels:
   1. ASTM-A36 steel, Sizes and configurations as indicated.
   2. Items to be HDG (galvanized):
      a. Items to be permanently exposed to weather, high-humidity, or wet conditions.
      b. Items set into exterior walls.
   3. Shop Prime interior items (in non-wet areas).

D. Miscellaneous Equipment Supports:
   1. ASTM A36 steel, Sizes and configurations as indicated.
   2. Examples of items included:
      a. Supports for Folding Partitions, Operable Walls, Coiling Doors and Grilles.
      b. Supports for ICU Doors.
      c. Support of Medical Equipment including Surgical Lights, Power Columns. And other items indicated.

d. Ceiling hung toilet partitions.
e. Other miscellaneous support items as indicated.

3. Items to be hot dipped galvanized:
   a. Items to be permanently exposed to weather, high-humidity, or wet conditions.
   b. Items set into exterior walls.
4. Shop Prime interior items (in non-wet areas).

2.7 BOLLARDS

A. General:
1. Provide where indicated.
2. Supply items required to complete construction and installation.
3. Minimum Workmanship Standards (unless noted otherwise): Class 1 (Architectural) per NAAMM AMP-555, Code of Standard Practice for the Architectural Industry.

B. Type DB-1 (Steel Bollards with Decorative Cover):
1. Assembly including a concrete-filled steel pipe with a decorative cover sleeve.
2. Steel pipe bollard:
   a. 6 IN diameter extra strength, HDG (galvanized), steel pipe.
   b. Length: Unless otherwise indicated; minimum 42 IN projection above ground and 36 IN embedment into concrete.
   c. Fabricate with welded on anchors.
   d. Fill with 3000 PSI concrete, flush at top.
3. Decorative Bollard Covers:
   a. Description: 1/8 IN thick, HDPE.
   b. Size as appropriate for pipe.
   c. Color: To be selected by Architect.
      1) 5-year warranty for color-fastness, cracking and UV-resistance.
   d. Dual reflective stripes near top of cover.
   e. Base Product: Bollardgard by Thermoprene.

PART 3 - EXECUTION

3.1 INSPECTION

A. Verify suitability of substrate to accept installation.

B. Installation constitutes acceptance of responsibility for performance.

C. Ensure that adequate Wall Backing (as specified in Section 09 22 16) has been installed where required for wall-mounted items specified in this Section.

3.2 INSTALLATION

A. General:
1. Set work level, true to line, plumb.
2. Shim and grout as necessary.
3. Weld field connections and grind smooth.
4. Where practical, conceal fastenings.
5. Secure metal to wood with lag screws of adequate size with appropriate washers.
6. Secure metal to concrete with embedded anchors, setting compounds, caulking and sleeves, or setting grout.
   a. Use expansion bolts, toggle bolts, or screws for light duty service.
7. Meet structural requirements for erecting items of structural nature.
8. Do not field splice fabricated items unless size requires splicing.
9. Weld splices.
10. Provide fabricated items complete with attachment devices as required to install.

B. Galvanic Repair:
   1. After galvanized units have been erected and anchored apply galvanizing repair paint in accordance with manufacturer's recommendations.
   2. Surface preparation: Remove contaminates in accordance with SSPC SP-1.

C. Bollards:
   1. Direct-buried: Prepare hole in earth which is at least:
      a. Hole Depth: 6 IN deeper than embedment length specified for bollard.
      b. Hole Diameter: 24 IN diameter for 6 IN diameter pipes.
      c. Set pipe bollards plumb and to the exposure height indicated.
   2. Surface-Bolted and other means of attachment: Install as detailed.
   3. Fill annular space with concrete fill having a compressive strength of at least 20,685 kPa 3000 PSI.
   4. Paint or cover with decorative sleeves as scheduled.

PART 4 - MEASUREMENT AND PAYMENT

A. Refer to Section 01 22 00, Part 4, regarding measure and payment.

B. Work of this Section is considered incidental to work under other payment items and no separate measurement and payment will be made to the Contractor for Work of this Section. Work of this section shall include furnishing all labor, materials, tools, equipment, supplies, supervision, and incidentals necessary as described by the Contract Documents.

END OF SECTION

This page intentionally left blank.

SECTION 09 91 13
EXTERIOR PAINTING

PART 1 - GENERAL

1.1 SUMMARY

A. Furnish all labor, materials, tools, equipment, and services for Exterior Painting, as indicated, in accordance with provisions of Contract Documents.

B. Completely coordinate with work of other trades.

1.2 QUALITY ASSURANCE

A. Definitions:
   1. "Paint" and "painting" refer to applied coatings.
   2. Mechanical work and equipment: Work included in Mechanical Specification Divisions.
   3. Electrical work and equipment: Work included in Electrical Specification Divisions.

B. Work included:
   1. Exterior surfaces scheduled to be painted, unless indicated to be painted under other sections.
   2. Except for colored, split-face, patterned, ground-face, glazed, and other concrete masonry units with integral architectural finish; paint exposed exterior and on-site concrete masonry unit surfaces, including areaway walls, backside faces of parapets, screen walls, and retaining walls.
   3. Mechanical and electrical work:
      a. Exterior equipment and items not completely factory finished.

1.3 SUBMITTALS

A. Product Data:
   1. Manufacturer's data for each paint type to be applied indicating conformance to specifications.

Default. Finishes scheduled in the Drawings.

B. Samples:
   1. Three 8 1/2 IN x 11 IN samples of each color and finish as noted in Drawing I-001 Interior Notes & Finish Legend.
   2. Gloss samples.

C. Contract Closeout Information:
   1. Maintenance data.

PART 2 - PRODUCTS

2.1 ACCEPTABLE MANUFACTURERS

A. Provide paint as product of one manufacturer as far as possible.

B. Paint, stain, and coating systems listed are Sherwin Williams unless noted otherwise.
   1. Use comparable performance and aesthetic requirements for paints by Optional manufacturers.

C. Paints:
   1. Base:
      a. Sherwin-Williams.

2. Optional:
    a. PPG Architectural Finishes.
    b. Benjamin Moore.
    c. Glidden Professional.

D. Other manufacturers desiring approval comply with Section 00 26 00.

2.2 MATERIALS

A. Paints and stains: As shown on drawings.
1. Unscheduled items: Bring to the attention of Architect.
2. Colors:
    a. As shown on drawings.
3. Gloss range: Refer to Part 3.10 for schedule. MPI Standards as measured in accordance with ASTM D523:
    a. Gloss Level 1 (Flat): Maximum 5 at 60 degrees, maximum 10 at 85 degrees.
    b. Gloss Level 2 (Velvet): Maximum 10 at 60 degrees, 10-35 at 85 degrees.
    c. Gloss Level 3 (Eggshell): 10-25 at 60 degrees, 10-35 at 85 degrees.
    d. Gloss Level 4 (Satin): 20-35 at 60 degrees, minimum 35 at 85 degrees.
    e. Gloss Level 5 (Semi-gloss): 35-70 at 60 degrees.
    f. Gloss Level 6 (Gloss): 70-85 at 60 degrees.
    g. Gloss Level 7 (High gloss): More than 85 at 60 degrees.
4. If the gloss range is not indicated, provide top coat with a MPI Gloss Level 3 (Eggshell) finish.
5. Submit gloss samples for approval prior to use.
6. Add flatteners if necessary to achieve specified gloss.
7. Part 3 includes a listing of surfaces and type of paint to be applied.

PART 3 - EXECUTION

3.1 INSPECTION

A. Examine surfaces carefully for defects which cannot be corrected and might prevent satisfactory results.

B. Commencing of work in a specific area constitutes acceptance of surfaces, and responsibility for performance.

3.2 SURFACES NOT TO BE PAINTED

A. Anodized aluminum, stainless steel, chromium plate, glass, copper, bronze or similar materials.

B. Moving parts of valves, operating units, mechanical and electrical parts, such as valve and damper operators, sending devices, motor and fan shafts.

C. Code labels, such as UL, FM that are mylar or flat (non-embossed) plates.
1. Embossed plates and labels stamped into frames will be painted, label and information on label to be readily visible and convenient for identification by authority having jurisdiction.

D. Equipment identification or rating plates.

E. Items having complete factory finish with exception of:
1. Exterior mechanical equipment.
2. Exterior electrical equipment.

3.3 PREPARATION - GENERAL

A. Assure that surfaces are clean and dry.

B. Assure that surfaces are free of foreign materials which will affect adhesion or appearance.

C. Remove mildew and neutralize surface.

D. Eliminate efflorescence before painting.

E. Before painting, test surfaces with moisture meter.

F. Paint when moisture is within paint manufacturer's acceptable limits.

3.4 MATERIAL PREPARATION

A. Mix and prepare materials per manufacturer's specifications.

B. Stir, agitate or blend materials to produce a mixture of uniform density as required for application of materials.

3.5 PREPARATION - FERROUS METAL SURFACES AND HOLLOW METAL

A. Follow requirements of SSPC SP1 and SP3.
   1. Except where higher prep levels are indicated.

B. Wire brush, or grind as necessary to remove shoulders at edge of sound paint to prevent telegraphing.

C. Touch up damaged shop coats.

D. For surfaces with touched up shop coat, omit first coat.

E. Hollow metal frame joints at intersections of Rabbets, Stops, and Soffit Joints:
   1. Neatly fill corner seam with painter's caulk (in field) prior to painting.

3.6 PREPARATION - GALVANIZED METAL SURFACES AND NON-ANODIZED ALUMINUM

A. Follow requirements of SSPC SP1.

B. Treat surfaces with galvanized surface cleaner as recommended by primer and topcoat manufacturer.

3.7 PREPARATION – CONCRETE AND MASONRY

A. Repair minor defects.

B. Remove oil from concrete by washing with xylol.

C. Block Filler:
   1. Apply masonry to fill pinholes and minor surface defects, and to prime surface for topcoat.
   2. Apply by brush, roller or sprayer.
      a. Where spray-applied: Back-roll with roller or squeegee.
   3. Minimum Nominal Thickness: 10 mil DFT.
      a. Comply with manufacturer’s recommended coverage rates for conditions encountered.
   4. Provide complete cover with recommended coating system.

D. Obtain architect's approval of finish for surfaces to receive high build glazed coatings.

3.8 APPLICATION - GENERAL

A. Paint surfaces as specified in paragraphs "Schedule - Exterior Paint Systems".

B. Provide complete coverage and hide.
   1. Paint systems are to cover.
   2. When color or undercoats show through, apply additional coats at no additional cost until paint film is of uniform finish and color.

C. Employ only skilled mechanics.

D. Mix and apply as recommended by manufacturer.

E. Install when temperature, humidity, and surface conditions are acceptable to manufacturer.

F. If Architect so directs, do not apply succeeding coats until Architect has an opportunity to observe previous coat.

G. Remove and protect hardware, accessories, plates, fixtures, finished work, and similar items; or provide ample in-place protection.

H. Upon completion of painting, carefully replace removed items and/or remove protection.

I. Apply materials under adequate illumination.

J. Evenly spread and smoothly flow on for full, smooth cover.

K. Assure that coats are dry before recoating.

L. Touch up suction or hot spots in plaster, concrete block, and concrete before painting.

M. Touch up abraded areas of shop prime coats before subsequent coats are applied.

N. Back prime wood trim with penetrating sealer.

O. Finish colors not indicated shall be selected by Architect from paint manufacturer's standard colors.

3.9 PROTECTION AND CLEANUP

A. Protect adjacent work against damage by painting and finishing work.

B. Clean, repair or replace, and repaint damaged work as directed by Architect.

C. Provide "WET PAINT" signs.

D. Remove temporary protective wrappings, after completion of operations.

E. Clean paint spattered surfaces.

F. Use care not to damage finished surfaces.

G. Remove surplus materials, scaffolding and debris.

H. Leave areas broom clean.

3.10 SCHEDULE - EXTERIOR PAINT SYSTEMS

A. Select elastomeric – smooth, or elastomeric – textured. Coordinate with plaster section, coating may be specified there. Add if required.

B. Metal doors and frames; Metal handrails and guardrails; Miscellaneous metals (ferrous, primed, zinc-coated, and aluminum):
   1. Acrylic, Level 5 (Semi-Gloss) See drawings:
      a. Sherwin Williams:
         1) Primer coat: Recommended by topcoat manufacturer for each substrate.
         2) Intermediate coat: PRO INDUSTRIAL, ACRYLIC, B66-650.
         3) Topcoat: PRO INDUSTRIAL, ACRYLIC, B66-650.
      b. PPG:
         1) Primer coat: Recommended by topcoat manufacturer for each substrate.
         2) Intermediate coat: Pitt-Tech Plus Exterior Semi-Gloss DTM Industrial Enamel
         3) Topcoat: Pitt-Tech Plus Exterior Semi-Gloss DTM Industrial Enamel
      c. Benjamin Moore:
         1) Primer coat: Recommended by topcoat manufacturer for each substrate.
         2) Intermediate coat: Aura Grand Entrance Exterior Paint
         3) Topcoat: Aura Grand Entrance Exterior Paint
      d. Glidden Professional:
         1) Primer coat: Recommended by topcoat manufacturer for each substrate.
         2) Intermediate coat: Fortis 450.

3) Topcoat: Fortis 450.

C. Structural steel (exposed):
1. Acrylic, Gloss Level 5 (Semi-Gloss):
a. Sherwin Williams:
1) Primer coat: Recommended by topcoat manufacturer for each substrate.
2) Intermediate coat: PRO INDUSTRIAL, ACRYLIC, B66-650.
3) Topcoat: PRO INDUSTRIAL, ACRYLIC, B66-650.
a) Clear coat: Recommended by topcoat manufacturer for each substrate.
b. Glidden Professional:
1) Primer coat: Recommended by topcoat manufacturer for each substrate.
2) Intermediate coat: Devthane UVA Aliphatic Urethane Gloss Enamel; 389.
3) Topcoat: Devthane UVA Aliphatic Urethane Gloss Enamel; 389.
4) Clear coat: Manufacturer recommended.
c. PPG:
1) Primer coat: Recommended by topcoat manufacturer for each substrate.
2) Intermediate coat: Pitthane Ultra Gloss Urethane 95-812.
3) Topcoat: Pitthane Ultra Gloss Urethane 95-812.
4) Clear coat: Pitthane Ultra Gloss Urethane 95-812.

PART 4 - MEASUREMENT AND PAYMENT

A. Refer to Section 01 22 00, Part 4, regarding measure and payment.

B. Work of this Section is considered incidental to work under other payment items and no separate measurement and payment will be made to the Contractor for Work of this Section. Work of this section shall include furnishing all labor, materials, tools, equipment, supplies, supervision, and incidentals necessary as described by the Contract Documents.

END OF SECTION

This page intentionally left blank.

SECTION 09 96 23
ANTI-GRAFFITI COATING AND REMOVER

PART 1 - GENERAL

1.1 SUMMARY

A. Furnish labor, materials, tools, equipment, and services for Anti-Graffiti Coating and Remover, as indicated, in accordance with provisions of Contract Documents.

B. Completely coordinate with work of other trades.

1.2 QUALITY ASSURANCE

A. Applicator must be licensed by manufacturer, or approved in writing.

B. ASTM D2369 Standard Test Method for Volatile Content of Coatings.

C. Mockup:
1. Minimum 4 FT x 4 FT area on each surface type.
2. Coordinate location with Architect.
3. Apply in accordance with Manufacturer's recommendations and instructions.
4. Allow protective treatment cure before testing inspection.
5. Keep test panels available for comparison throughout protective treatment project.
6. Accepted test area may be included in work.

1.3 SUBMITTALS

A. Contract Closeout Information:
1. Maintenance data.
   a. See Section 01 78 23.

PART 2 - PRODUCTS

2.1 ACCEPTABLE MANUFACTURERS

A. Anti-Graffiti Coating System and Remover:
1. Base:
   a. Monopole, Inc.
2. Optional:
   a. Prosoco, Inc.
   b. Hydrozo.
   c. Chemprobe.

B. Other manufacturers desiring approval comply with Section 00 26 00.

2.2 MATERIALS

A. Anti-Graffiti Coating System:
1. Penetrating, clear, solvent-based silicone elastomer.
2. UV stable.
3. Total solids: 50 percent minimum.
4. VOC Content: Comply with USEPA AIM VOC regulations (40 CFR 59.403).
5. Base Product: Permashield Premium by Monochem, Monopole, Inc.

B. Graffiti Remover:
1. Base product: Monochem Citrus Clean Super, or equal, Monopole, Inc.
2. Water-Miscible

PART 3 - EXECUTION

3.1 INSPECTION

A. Verify suitability of substrate to accept installation.
   1. Bring holes, voids, and cracks to Architect's attention.

B. Application constitutes acceptance of responsibility for performance.

3.2 PREPARATION

A. Verify concrete was steel troweled, hair broomed, and free of fins, ridges and voids.

B. Assure curing agents are compatible with sealer or completely removed.

C. Concrete must be cured for minimum of 28 days, with moisture content not exceeding 8 percent.

D. Remove surface contamination by cleaning or if necessary by sandblasting.

E. Repair, holes, voids, and cracks.

F. Apply test patch.
   1. If test patch indicates lack of adhesion, re-prepare surface.

3.3 APPLICATION

A. General:
   1. Apply in accordance with Manufacturer's recommendations and instructions.
   2. Do not apply to surfaces scheduled to receive cementitious coatings or toppings, such as concrete, terrazzo, polyester or epoxy coatings.

B. Spray Application:
   1. Apply sealer wet-on-wet and saturate from bottom up, creating a 6 IN to 8 IN rundown below spray contact point.
   2. Allow first application to penetrate 2 - 3 minutes.
   3. Resaturate surface with sealer.
   4. Spray in overlapping X-pattern to fluted surfaces to ensure coverage of recessed surfaces.
   5. Reduce rundown to 4 IN to 6 IN below contact point when applying to burnished, ground face or similar smooth surfaces.

C. Brush or Roller Application:
   1. Apply sufficient material to thoroughly saturate surface.
   2. Avoid excessive overlapping.
   3. Brush out non-penetrating heavy runs and drops.
   4. Dense Surfaces:
      a. Apply a single coat to wet surface without creating drips, puddles or rundown.
      b. Do not over apply.
   5. Porous Surfaces:
      a. Apply 2 coats.
      b. Apply second coat within 2 hours of first coat, or first coat is dry to touch.

D. Protect treated surfaces from rain for 4-6 hours.

3.4 PATCHING AND CLEANING

A. Recoat areas which fail to match adjacent work.

B. Remove debris resulting from these operations.

END OF SECTION

SECTION 10 14 03
IDENTIFICATION DEVICES - EXTERIOR

PART 1 - GENERAL

1.1 SUMMARY

A. Furnish all labor, materials, tools, equipment, and services required for fabrication and installation of Identification Devices as indicated in the Drawings and described in this Section.

B. Completely coordinate with work of other trades.

C. Although such work is not specifically indicated, provide supplementary or miscellaneous items, appurtenances and devices incidental to, or necessary for a sound, secure and complete installation.

D. Identification devices indicated in AG-Series Drawings are specified in this Section.

E. Definitions:
1. Identification devices refers to signage and graphics designed, fabricated, and installed for the purpose of effectively communicating directional information to persons within a building, and throughout the building campus.

1.2 QUALITY ASSURANCE

A. UL compliance: Light fixtures and electrical components.

1.3 SUBMITTALS

A. Shop Drawings:
1. Fabrication and erection drawings for identification device types.
   a. Complete, fully dimensioned, large scale, and detailed fabrication drawings of major components.
   b. Include plans, elevations, and full scale details of identification device wording and lettering layout.
2. Field verify dimensions and locations for identification device types prior to developing shop drawings.
3. Template drawings: Furnish location template drawings for items supported or anchored to permanent building construction.

B. Samples:
1. Laser output proof: Full character set, or sets with a minimum cap height of 2 IN.
2. Full scale pen plot of each identification device legend.
3. Full-size spacing templates for building mounted letters and numbers.
4. Full-size sample letter required for identification device types in the specified typeface, materials, and finish.
   a. Where possible, provide on the actual background material.
5. Minimum 6 IN x 6 IN sample of materials for identification device types.
6. Minimum 6 IN x 6 IN sample of colors requiring color matches on samples of actual identification device material.
7. Prototypes:
   a. Fabricate 1 prototype of each identification device type for verification and testing after shop drawing and sample submittals are approved, and prior to fabrication.
   b. Due to the scale and complexity of some identification device types, partial section prototypes will be required for the following:
      To be determined.
   c. Submit clarification drawings detailing scale, materials, finishes, fasteners, etc. for section prototypes for review and approval prior to fabrication.
      a) Contract Closeout Information:
         (1) Operating and Maintenance Data.
8. Warranties.

9. Spare parts.

1.4 WARRANTY

A. Manufacturer shall warrant workmanship and materials for a period of 2 years.

PART 2 - PRODUCTS

2.1 ACCEPTABLE MANUFACTURERS

A. Identification devices:
   a. Base:
      1) Poblocki Sign Company.
   b. Optional:
      1) ASI Sign Systems.
      2) Best Manufacturing Sign Systems.
      3) Inpro Corporation.
      4) Interface Architectural Signage.
      5) Mohawk Sign Systems.
      6) Signscape.
2. Other manufacturers with a complete line of identification devices desiring approval comply with Section 00 26 00.

2.2 IDENTIFICATION DEVICES

A. General:
   1. References to Drawings are primarily to sheets labeled “AG”. Information may be listed on other sheets such as “A” and “E”.
   2. The following information is shown on Drawings for each sign type:
      a. Individual component and accent materials.
      b. Letter style, case and height.
      c. Character proportions.
      d. Letter colors.
      e. Background color and other graphics.
      f. Mounting method and shims or spacers used.
      g. Location of sign relative to other building elements.
      h. Finish level.
   3. Direction and identification devices for communications systems: International Symbols.

B. Identification device types:
      1) See drawings.

2.3 IDENTIFICATION DEVICE FINISH LEVEL

A. High Finish:
   1. May include following materials, or combination of materials:
      a. Back-painted, sandblasted glass panel with silkscreened letters.
      b. Etched, paint-filled letters.
      c. Etched stainless steel panel.
      d. Full round bar stock stainless steel letters.
      e. LED digital matrix display.
      f. Painted aluminum letters.
      g. Painted aluminum panel.
      h. Painted die-cut vinyl letters.
      i. Pre-patina copper panel.
      j. Water-jet cut stainless steel letters.

B. Medium Finish:
   1. May include following materials, or combination of materials:
      a. Painted acrylic letter.
      b. Painted acrylic panel.

c. Clear acrylic panel with paper insert.
d. Painted aluminum panel with reflective die-cut vinyl letters.
e. Painted photopolymer panel with silkscreened letters.
f. Scotchprint Panaflex digital vinyl.

C. Finish and contrast:
1. Characters and background:
a. Non-glare.
b. Characters must contrast with background; recommend 70 percent.

2.4 MATERIALS

A. All materials to be inert.

B. Contractor ensure and prevent galvanic reactions between products used.

C. Acrylic:
1. Cast Acrylic Sheet: Cast, not extruded or continuous cast, methyl methacrylate monomer plastic sheet.
a. Provide in sizes and thicknesses indicated.
b. Minimum flexural strength: Mean 110MPa 16,000 PSI when tested in accordance with ASTM-D790.
c. Minimum allowable continuous service temperature of 80 degC 176 degF.
2. General types:
a. Transparent Sheet: Clear, colorless sheet, matte finish.
1) Light transmittance: 92% when tested in accordance with ASTM-D1003.
b. White Translucent Sheet:
1) Density required to produce uniform brightness and minimum halation effects.
c. Opaque Sheet:
1) Colored opaque acrylic sheet in colors and finishes indicated; If not indicated, provide in colors selected from the manufacturer's full range of standard colors.
2) 30-30 Acrylic: Tinted.
3. Edges: Polish edges.
4. Abrasive Resistance Coating (ARC):
a. Product: Abrasive resistant coating as recommended by manufacturer.
b. Apply ARC to exposed faces of acrylic sheet after graphics have been applied.

D. Graphics:
1. Electrostatic or electronic graphics process.
2. Applicator: Applied Image, Farmingdale, New Jersey.

E. Paints:
1. Under-coating: Apply paint under-coating for identification devices for deterioration of metals prevention.
2. Finish:
a. Evenly spray apply finish in accordance with manufacturer's recommendation.
b. Finish to be free of grit, dirt, smears, spots, and orange peel effect.
3. Compatibility: Ensure paint compatible with metal used.
4. Ultra-violet inhibitors: Each coat shall have UV Inhibitors
5. Manufacturer: Matthews Paint Company, Pleasant Prairie, WI.

F. Polymer:
1. Photopolymer:
a. Sheet photopolymer:
1) Manufacturer: Nova Polymers Inc., Yeadon, PA.
2) Product: NovAcryl, PT Series nylon based photopolymer on extruded, clear, UV stable copolyester PETG thermoplastic base.
a) Model: PT-236.
3) High resolution, ADA compliant, raised graphic sign.
a) Minimum face relief: .032 IN in compliance with ADA.
b) Maximum face relief: .040 IN in compliance with ADA.

4) Base thickness: 6.0 mm.
5) Face relief: 1.0 mm Nylon resin based photopolymer layer.
6) Substrate: Clear PETG plastic base with UV inhibitor.
7) Photopolymer Durometer: 80 Shore D Durometer hardness.

b. Process in accordance with manufacture's General Processing Guidelines.
c. Laminated photopolymers are not acceptable.
d. Finishes:
1) Automotive grade acrylic polyurethane finishes.
2) Manufacturer:
a) Base: Matthews Paint Company, Pleasant Prairie, WI.
b) Optional: Carbit Paint, Co, Inc., Chicago, IL
3) Lacquer based finishes are not acceptable.

2. Solid polymer:
a. Material: Solid sheet nonporous polymer, homogeneous filled acrylic.
1) Coated, laminated, or composite construction are not acceptable.
b. Provide material in compliance with ANSI-Z124.3 and ANSI-Z124.6.
c. Manufacturer:
1) Base: DuPont Corian.
2) Optional:
a) Avonite.
b) Surrell.

3. Removable reflective film:
a. Adhesive coated opaque sheeting.
1) Liner: Easy release for removable messages.
2) Sheeting: Reflective even when wet by rain.
b. Properties:
1) Adhesion on etched aluminum: 2.5 LBS/IN.
2) Applied temperature: Minus 1 degC to plus 93 degC Minus 30 degF to plus 200 degF.
3) Dimensional stability: .025 cm .010 IN.
4) Entrance angle: Minus 4 Deg 35 to 18/40 Deg 7 to 4.5.
5) Flexibility: No cracking.
6) Observation angle: .2 Deg to .5 Deg.
7) Removability: Up to 18 months.
8) Thickness: .010 IN.

G. Fasteners and Anchors:
1. Anchors and inserts:
a. Exterior installations, and areas requiring corrosion resistance:
1) Non-ferrous metal, or hot-dipped galvanized anchors and inserts.
b. Concrete and masonry work: Toothed steel, or lead expansion bolt devices with inserts for drilled-in-place anchors.
2. Bracket mounting:
a. Identification devices which project at right angles from walls or ceilings.
1) Manufacture's recommended standard concealed brackets, fittings, and hardware.
2) Attach brackets and fittings securely to walls or ceilings with concealed fasteners and anchoring devices in accordance with manufacturer's recommendations.
3. Cast metal: Mount cast plaques using standard method recommended by manufacturer for each type of wall surface.
4. Concealed mounting:
a. Mounting plaques: Insert threaded studs into tapped lugs on back of plaque.
b. Set in predrilled holes filled with quick setting cement.
5. Face mounting: Mount plaques with exposed fasteners anchored through face of plaque into wall surface.
6. Flush mounting: Letters mounted with backs in contact with wall surface.
7. Mechanical fastening: Manufacturer's recommended fasteners based on identification device type and substrate.

8. Metal letters and numbers:
    a. Manufacturer's standard fastening method for letter form, type of mounting, wall construction, and condition of exposure.
    b. Heavy paper template: Provided by Manufacturer for establishing letter spacing and for locating holes for fasteners.
9. Projected mounting: Mount letters at a projected distance from the wall surface as indicated.
10. Reclosable fasteners:
    a. Manufacturer: 3M.
    b. Fastener types.
        1) Dual Lock SJ3562, Type 170.
        2) Dual Lock SJ3560. Type 250.
        3) Dual Lock SJ3561, Type 400.
    c. Provide fastener types as recommended by manufacturer.
11. Shim plate mounting:
    a. Concealed aluminum shim plates 1/16 IN thick, with predrilled and countersunk holes.
    b. Provide at locations indicated, and where other mounting methods are not practicable.
    c. Attach shim plate with fasteners and anchors providing secure attachment to substrate.
    d. Attach panel identification devices to shim plate and substrate.
12. Wall mounting: Attach panel identification devices to wall surfaces using following methods:
    a. Vinyl tape mounting: Double-sided foam tape, thickness indicated, or as required to mount identification devices to smooth, non-porous surfaces.
    b. Silicone adhesive mounting:
        1) Liquid silicone adhesive recommended by Manufacturer for attaching identification devices to irregular, porous, or vinyl-covered surfaces.
13. Installer requirements:
    a. Based on manufacturer recommendations, installer shall be responsible for fastener compatibility with substrates.
    b. Insure that oxidation does not occur, or that other reactive processes do not occur between related signage materials and fasteners.

H. Adhesives:
1. Double faced laminating film:
    a. Manufacture: Fasson, Division of Avery International Company.
    b. Type: FASTAPE A Laminating Film, or as recommended by manufacturer.
2. Permanent double faced tape:
    a. Manufacturer: 3M.
    b. Type: 1/32 IN, Scotch Mount Neoprene Tape No. 4962, or as recommended by manufacturer.
3. Removable double faced tape:
    a. Manufacturer: 3M.
    b. Type: 1/32 IN, double faced removable tape No. 4432, or as recommended by manufacturer.
    c. Color: Black.
4. Silicon adhesive:
    a. Manufacturer: General Electric Corporation.
    b. Type: Silicon paneling adhesive as recommended by manufacturer.
5. Permanent adhesive:
    a. Manufacturer: 3M.
    b. Scotch 468MP, hi-performance adhesive, or as recommended by manufacturer.
6. Installer ensure adhesive compatibility with substrates.

I. Finishes:
1. Metal finishes: Finish in compliance with NAAMM Metal Finishes Manual for finish designations and application recommendations.
2. Paint: Satin finish.
3. Stainless steel: ANSI No. 4 finish, horizontal grain, unless otherwise noted or specified..
4. All finishes comply with American with Disabilities Act:
    a. Measure finishes with a Glossimeter to insure compliance.

2.5 GRAPHICS

A. Image process:
   1. Graphic content and style:
      a. Provide identification device copy in compliance with requirements indicated for content, finishes, materials, positions, sizes, spacing, styles, and colors of letters, numbers, symbols, and other graphic images.

B. Typography:
   1. Typography and graphics: Photographically and/or mechanically reproduced.
   2. International Symbols: In accordance with U.S. Department of Transportation current standards publication.
   3. Identification device typeface fonts: Provide as indicated on drawings.
   4. Letter forms:
      a. Use approved type font masters from the original type foundry.
      b. Cut letter forms with Signus equipment, only.
      c. Die cutting: Letter forms edges and corners are to be clean and true.
         1) Letterforms with ragged edges, rounded positive or negative corners will not be acceptable.

C. Artwork:
   1. Manufacturer provide typesetting, and mechanical artwork required for identification device types.

PART 3 - EXECUTION

3.1 INSPECTION

A. Examine conditions under which materials are to be installed.

B. Installation constitutes acceptance of responsibility for performance.

3.2 FABRICATION

A. General requirements:
   1. Fabricate and assemble identification devices in shop to the greatest extent possible.
   2. Fabricate parts and assemblies ready for installation at the building site.
   3. Surface defects considered unacceptable: Oil canning, cupping, and warping.
   4. Grind welds shall smooth.
   5. Be responsible for structural stability and mounting for graphics and identification devices.
   6. Provide vandal-resistant materials and finishes. Make recommendations of vandal-resistant design or manufacturing processes that may not be indicated in drawings.

B. Identification device panels:
   1. Comply with requirements indicated for colors, designs, details of construction, finishes, materials, shapes, sizes, and thicknesses.
   2. Surfaces: Smooth, even, and level.
   3. Identification device panel flatness:
      a. Fabricate panels to remain flat within 1/32 IN over the concave surface.
      b. Fabricate panels to remain flat under installed conditions within a tolerance of plus or minus 1/16 IN measured diagonally.
   4. Edge Condition: 90 degree square cut, unless otherwise noted.
   5. Corner condition: Provide square corners, unless otherwise noted. Ease corners to prevent injury/clothing snags.
   6. Panel materials:
      a. See drawings for types and locations.

C. Applied copy:
   1. Die-cut copy characters from vinyl film.
   2. Provide pressure sensitive adhesive backing.
   3. Apply copy to exposed face of identification device panel.

4. Apply copy to other surfaces where indicated.

D. Photo-etched copy:
1. Fabricate raised lettering on metal background using acid etching process.
2. Metal background for acid etching: Stainless steel or magnesium plate.
   a. Finish metal background as indicated.
   b. Paint raised surface.

E. Engraved copy:
1. Graphic elements, letters, numbers, and symbols machine engraved into identification device panel face.
   a. Engrave to a precisely formed copy, incised to uniform depth.
   b. Engrave using high speed cutters, mechanically linked to master template in a pantographic system.
2. Engraved acrylic: Epoxy enamel fill engraved acrylic copy.
3. Face engraved clear acrylic:
   a. Epoxy enamel fill engraved copy.
   b. Opaque background color coating shall be applied to back face of acrylic sheet.
   c. Copy shall be engraved to a minimum depth of 1/32 IN, and 1/4 IN minimum stroke thickness.
4. Engraved metal: Epoxy enamel fill engraved copy.
5. Engraved plastic laminate: Engrave through exposed plastic laminate face ply to expose contrasting core ply.
6. Subsurface engraved acrylic sheet:
   a. Back face: Reverse engrave.
   b. Engraved copy: Fill with epoxy enamel.
   c. Opaque background color coating: Apply over epoxy-enamel filled copy.

F. Silkscreened copy:
1. Subsurface copy:
   a. Form panel face: Apply copy to back face of clear acrylic sheet to form panel face.
   b. Produce precisely-formed opaque images with smooth edges.
   c. Print copy: Reverse silkscreen process.
      1) Copy shall be over sprayed with opaque background color coating.

G. Raised copy:
1. Exterior grade:
   a. Fabrication of raised lettering on metal background to magnesium alloy plate shall be by acid etching process.
2. Machine-cut letter forms, and chemically weld to indicated materials.
   a. Form characters with square cut edges free from burrs and cut marks.
   b. Panel material, and raised copy thickness: Not less than 1/32 IN.

H. Metal letters and numbers:
1. Comply with requirements indicated for manufacturing process, finish, materials, message content, style, and size.
2. Metal: Stainless steel, unless otherwise indicated.

I. Fabricated metal letters and numbers:
1. Fabricate metal letters and numbers in sizes and styles indicated.
   a. Thicknesses: As indicated.
   b. Form exposed faces and sides of characters.
   c. Produce surfaces free from warp and distortion.
   d. Provide internal bracing for stability.
   e. Provide internal bracing for attachment of required mounting accessories.

3.3 INSTALLATION

A. General requirements:

1. Locate identification devices and accessories where shown, or scheduled in AG-Series drawings.
2. Use mounting method types indicated and as described, and in accordance with manufacturer's recommendations.
3. Field determine exact locations and dimensions for identification devices prior to fabrication.
4. Contractor immediately notify Owner and Architect if building and site conditions are at variance with drawings.
    a. Do not to proceed until the unsatisfactory conditions have been corrected.
5. Install identification devices in positions shown on drawings.
    a. Install identification devices at heights indicated, plumb, and in alignment.
    b. Brace devices securely until permanent anchorage is made.
    c. Identification device surfaces are to be installed free from distortion or other defects in appearance.
    d. Perform cutting, drilling, and fitting carefully.
    e. When required, fit at site before finishing.

B. Mount identification devices according to methods specified or as indicated on drawings for each type.

C. Manufacturer to provide printed instructions or drawings on wall blocking locations and type required to Contractor in a timely manner to allow installation.

3.4 CLEAN-UP

A. At completion of the installation, clean identification devices with appropriate cleaning agents prior to final inspection and acceptance. Grease, fingerprints, smudges, adhesive, etc. remaining on identification devices or components will not be acceptable. Protect identification device units from damage until acceptance by Owner.

B. Remove packing and debris from the project site upon completion and leave the site in a condition which is clean and free of damage and abuse.

PART 4 - MEASUREMENT AND PAYMENT

A. Refer to Section 01 22 00, Part 4, regarding measure and payment.

B. Work of this Section is considered incidental to work under other payment items and no separate measurement and payment will be made to the Contractor for Work of this Section. Work of this section shall include furnishing all labor, materials, tools, equipment, supplies, supervision, and incidentals necessary as described by the Contract Documents.

END OF SECTION

SECTION 10 44 00
FIRE PROTECTION SPECIALTIES

PART 1 - GENERAL

1.1 SUMMARY

A. Furnish labor, materials, tools, equipment, and services for Fire Protection Specialties in accord with provisions of Contract Documents.

B. Completely coordinate with work of other trades.

1.2 QUALITY ASSURANCE

A. Provide fire extinguishers, cabinets and accessories by single manufacturer.

B. National Fire Protection Association (NFPA):
   1. NFPA 10 Standard for Portable Fire Extinguishers.

C. Americans with Disabilities Act (ADA):
   1. Standards for Accessible Design.

1.3 SUBMITTALS

A. Contract Closeout Information:
   1. Maintenance data.
      a. See Section 01 78 23.

PART 2 - PRODUCTS

2.1 ACCEPTABLE MANUFACTURERS

A. Fire Protection Specialties:
   1. Base:
      a. Potter Roemer Fire Pro.
   2. Optional:
      a. Badger.
      b. Larsen's Manufacturing.
      c. Nystrom.

B. Fire Extinguishers:
   1. Base:
      a. JL Industries.
   2. Optional:
      a. Amerex.
      b. Badger.
      c. Larsen's Manufacturing.
      d. Nystrom.
   3. Other manufacturers desiring approval comply with Section 00 26 00.

2.2 FIRE EXTINGUISHER (FE)

A. Multi-Purpose Chemical Fire Extinguishers:
   1. Typical FE, except where more specialized types are required.
   2. Fluidized and siliconized chemical powder extinguishing agent suitable for classes A, B and C fires.
   3. Construction:
      a. Heavy-duty steel cylinder with metal valve and siphon tube with replaceable molded valve stem seal, visual pressure gauge, pull pin and upright squeeze grip.
      b. Corrosion and impact-resistant, powder coat finish.

c. Color: Red, in accord with OSHA requirements.
4. Capacity: 10 LBS.
a. UL-rating: 4A-80BC.
b. Base Product Model: Cosmic 10E by JL Industries.
5. Provide one FE for each:
a. Fire Extinguisher Cabinet (FEC).

2.3 FIRE EXTINGUISHER CABINETS (FEC)

A. General:
1. Provide FIRE EXTINGUISHER decal for each cabinet. Orient letters vertically on door.
2. Provide break-away release handle at each cabinet.
3. Keys to Door Locks: Three per lock.

B. FEC-4: Surface-mounted, Stainless Steel, Fire Extinguisher Cabinet:
1. Description: Stainless steel cabinet box fully exposed and mounted directly on wall with no trim.
2. Material: 0.028 IN (22 GA) #304 stainless steel.
a. Finish: #4 brushed.
3. Tub Size, inside clear (WxHxD): 11-1/2 x 20-1/2 x 6 IN.
4. Door Style: Duo-Vertical Panel w/ Lock, Tempered Safety Glass & break-away release; Clear acrylic.
5. Lock: Cam lock with emergency break-away release handle/mechanism.
6. Base Product: Surface Alta Fire Extinguisher Cabinets: 7059-SURFACE-DVL-6-STAINLESS_STEEL-VR

2.4 WALL BRACKETS

A. Wall Brackets:
1. Manufacturer's standard steel, designed to secure fire extinguisher to wall or structure, of sizes required for types and capacities of fire extinguishers indicated
2. Finish: Baked-enamel or powder coat.
3. Include mounting accessories suitable for substrate wall type.
4. Locations: Install wall brackets for each fire extinguisher (FE) not indicated to be installed in a cabinet.

2.5 FABRICATION

A. Cabinets:
1. Weld joints and grind smooth.
2. Provide factory-drilled mounting holes.
3. Install door locks at factory.

B. Cabinet Doors:
1. Fabricate doors according to manufacturer's standards, from materials indicated and coordinated with cabinet types and trim styles selected.
2. Fabricate door frames with tubular stiles and rails and hollow-metal design, 1/2 IN thick.

C. Cabinet Trim:
1. Fabricate cabinet trim in one piece with corners mitered, welded, and ground smooth.

2.6 FINISHES

A. Comply with NAAMM's Metal Finishes Manual for Architectural and Metal Products.

B. Protect mechanical finishes on exposed surfaces of fire protection cabinets from damage by applying a strippable, temporary protective covering before shipping.

C. Finish fire protection cabinets after assembly.

PART 3 - EXECUTION

3.1 INSPECTION

A. Verify suitability of substrates to accept installation.

B. Installation constitutes acceptance of responsibility for performance.

3.2 INSTALLATION

A. Install extinguishers and cabinets within limitations of NFPA-10 and ADA.

B. Securely fasten mounting brackets and cabinets to structure, square and plumb, to comply with manufacturer's instructions.

C. Provide unistrut or welded steel support where needed to mount cabinets or brackets in mechanical rooms and similar locations.

D. Provide required closures.

E. Installation Heights:
   1. Fire Extinguisher Cabinets (FEC):
      a. Locate with centerline of cabinet door handle not more than 48 IN AFF.
   2. Fire Extinguishers (FE) not contained in a cabinet:
      a. Locate wall brackets such that extinguisher release mechanism will not be higher 48 IN AFF.

3.3 ADJUSTING AND CLEANING

A. Remove temporary protective coverings and strippable films.

B. Adjust fire protection cabinet doors to operate easily without binding.
   1. Verify that integral locking devices operate properly.

C. Clean interior and exterior surfaces.

END OF SECTION

SECTION 26 00 10
ELECTRICAL GENERAL REQUIREMENTS

PART 1 - GENERAL

1.1 SUMMARY

A. Drawings use and interpretation:
   1. Drawings are diagrammatic and indicate general arrangement of systems and equipment, except:
      a. Specific installation details.
      b. When specific dimensions are indicated for electrical equipment it is intended that these be limiting dimensions. When proposed equipment exceeds these limiting dimensions, advise Architect. Features and functions of specified equipment shall not be superseded by these limiting dimensions.
   2. For exact locations of building elements, refer to dimensioned architectural/structural drawings.
   3. Field measurements take precedence over dimensioned drawings.
   4. Intention is to indicate size, capacity, approximate location, direction and general relationship of one work phase to another, but not exact detail or arrangement.

B. Installation of all systems and equipment is subject to clarification as indicated in reviewed shop drawings and field coordination drawings.

C. Description of systems:
   1. Provide materials to provide functioning systems in compliance with performance requirements specified.
   2. Provide modifications required by reviewed shop drawings and field coordinated drawings.

1.2 QUALITY ASSURANCE

A. Perform all work in accordance with but not limited to:
   1. Federal, state and local codes, regulations and ordinances.
   2. Underwriters Laboratories, Inc. (UL) requirements.
   3. NFPA-70 National Electrical Code (NEC).
   4. Occupational Safety and Health Act (OSHA).
   5. All authorities having jurisdiction.
   6. Factory Mutual System (FM) requirements.
   7. International Building Code (IBC).

1.3 SUBMITTALS

A. Contract Closeout Information:
   1. Final performance test reports.

1.4 DEFINITIONS

A. Weatherproof (WP): Indicates rating suitable for wet or damp location.

1.5 PROTECTION

A. Provide covering and shielding for all equipment to protect from damage.

B. Protect nameplates on motors and similar equipment, to prevent defacing.

C. Repair, restore or replace damaged, corroded and rejected items.

1.6 JOB CONDITIONS

A. Examine Contract Documents to determine how other work will affect execution of electrical work.

B. Make arrangements for and pay for necessary permits, licenses, and inspections.

C. Cause as little interference or interruption of existing utilities and services as possible.
   1. Schedule work which will cause interference or interruption in advance with Owner, Architect, authorities having jurisdiction and all affected trades.

D. Determine and verify locations of all existing utilities on or near site.

E. Temporary construction power and communications (See Division 01)

F. Record drawings:
   1. Keep a complete set of all electrical drawings in job site office for indicating actual installation of electrical systems and equipment.
   2. Use this set of drawings for no other purpose.
   3. Where any material, equipment, or system components are installed differently from that indicated, indicate differences clearly and neatly using ink or indelible pencil.
   4. At project completion, submit record set of drawings. Refer to Section 01 78 39 for specific requirements.

1.7 ENVIRONMENTAL CONDITIONS

A. General:
   1. Provide NEMA 1 enclosures for electrical equipment unless otherwise indicated.

B. Conduit: See Section 26 05 33.

C. Cable: See Section 26 05 19.

D. Boxes and Fittings: See Section 26 05 34.

E. Damp and wet locations:
   1. Exterior applications:
      a. Provide NEMA 3R enclosures for electrical equipment.
   2. Dietary applications:
      a. Provide NEMA 4 enclosures for electrical equipment in kitchen production, dishwashing and servery areas.
   3. Central sterile applications.
      a. Provide NEMA 4 enclosures for electrical equipment serving sterilizers and cart washing equipment.

F. Corrosive environments:
   1. Use NEMA 4X reinforced fiberglass watertight enclosures in areas with corrosive atmospheres.

PART 2 - PRODUCTS

2.1 MATERIALS

A. Use only prime quality, new materials, apparatus and equipment.

B. Material and equipment: Current and standard design of manufacturers regularly engaged in their production.

C. Where UL approval or listing is required in electrical specifications, suitable approval or listing from other Nationally Recognized Testing Laboratory (NRTL) is acceptable.

D. Use UL labeled electrical materials and fabricated assemblies.

E. Structural steel for supports: ASTM-A36.
   1. Galvanize members installed in areas of high humidity or condensation.
   2. Furnish other members with shop coat of rust inhibiting primer.
   3. Shop fabricate for field assembly using bolts.
   4. Minimize field welding.
   5. Retouch primer and galvanizing after field welding.
   6. Unless support is otherwise indicated where weight of equipment exceeds 400 pounds, submit engineering design and calculations signed and sealed by a registered Engineer licensed to practice Structural Engineering in the state in which the project is located.

F. Rain hoods and counter flashings not exposed to view:
   1. Stainless steel: Minimum 20 GA.
   2. Sheet copper: Minimum 24 OZ.

G. Rain hoods and counter flashings exposed to view: As specified in Section 07 62 00.

H. Access doors, panels and frames: See Section 08 31 16.
   1. Provide where indicated on Drawings.
   2. Where not indicated on Drawings, provide access panels and/or doors at walls, and inaccessible ceilings as required to permit access to equipment, devices and piping requiring service, adjustment, or inspection.
   3. Size:
      a. As required to allow access, inspection, service, and removal of items served.
      b. Minimum 18 x 18 IN.

2.2 FIRESTOPPING

A. Maintain fire and smoke ratings where electrical items penetrate fire and fire/smoke rated building elements.

B. Use materials and methods as specified in Section 07 84 00.

PART 3 - EXECUTION

3.1 GENERAL

A. Use only thorough, highly skilled, and experienced personnel.

B. When changes in location of any work are required, obtain approval of Architect before making change.

C. Do not change indicated sizes without written approval of Architect.

D. Provide all necessary offsets and crossovers in conduits, raceways, cable trays and ducts.

E. Where electrical items penetrate fire and/or smoke rated walls, ceilings and floors, comply with Section 07 84 00.

3.2 CUTTING AND PATCHING

A. Provide cutting, fitting, repairing, patching and finishing of installed work.
   1. Include installed work of other sections where it is necessary to disturb such work to permit installation of electrical work.
   2. Repair or replace existing or new work disturbed.

B. Avoid cutting, where possible, by setting sleeves or frames, and by requesting openings in advance.

C. Before cutting, obtain approval of Structural Engineer.
   1. Use only approved methods.
   2. Cut all holes neatly and as approved by engineer possible to admit work.
   3. Do not weaken walls or floors; locate holes in concrete to avoid structural members.

D. Locate openings and sleeves to permit neat installation of conduits and equipment.

E. Do not remove or damage fireproofing materials.
   1. Install hangers, inserts, supports, and anchors prior to installation of fireproofing.
   2. Repair or replace fireproofing removed or damaged, at no extra cost.

F. See Section 01 73 29.

3.3 EXCAVATING AND BACKFILLING

A. Trenching, backfilling, and compacting:
   1. See Section 31 23 33.

B. Site excavation:
   1. See Section 31 22 00.

3.4 INSTALLATION OF EQUIPMENT

A. Install all equipment in accordance with manufacturer's recommendations.

B. Provide all necessary anchoring devices and supports.
   1. Use structural supports suitable for equipment.
   2. Check loadings and dimensions of equipment with shop drawings.
   3. Do not cut, or weld to, building structural members.
   4. Provide equipment supports even though not detailed on architectural and structural drawings.

C. Specifier: Add if seismic bracing is required. Be sure to include Section 26 05 48
   Brace and anchor equipment in accordance with Section 26 05 48
   Verify that equipment will fit support layouts indicated.
   1. Where substitute equipment is used, revise indicated supports to fit at no additional cost.

D. Arrange for necessary openings to allow entry of equipment.
   1. Where equipment cannot be installed as structure is being erected, provide and arrange for building-in of boxes, sleeves or other devices to allow later installation.

E. Make all penetrations through roofs prior to installation of roofing. For penetrations required after installation of roofing:
   1. In built-up roofing (BUR), provide all curbs, cants and base flashings.
   2. In elastic sheet roofing (ESR), arrange and pay for flashing work by authorized roofer.

F. Install rain hoods and metal counter flashings as indicated and make all penetrations of electrical work through walls and roofs water and weathertight.
   1. Furnish all clamps, waterproofing material and labor necessary.
   2. Where metal flashings are applied over concrete, paint concrete with 1/8 IN of mastic cement first.
   3. Set flashing in mastic cement, watertight.

G. Have repair and replacement of roof construction, damaged by this work, done in manner which will not nullify roof warranty.

H. Install equipment to permit easy access for normal maintenance.
   1. Maintain easy access to switches, motors, drives, pull boxes, receptacles, etc.
   2. Relocate items which interfere with access.

I. Provide concrete foundations (isolation pads) or housekeeping pads for floor mounted electrical equipment as follows unless otherwise indicated:
   1. Install nominal 4 IN high concrete housekeeping pads. Outside dimension of pad shall be at least 4 IN larger in all directions than base of equipment or 9 IN from center of anchor, whichever is greater.
   2. Use 3,000 PSI concrete.
   3. Reinforce with No.13 No.4 bars, 12 IN OC each way, with short No.13 No.4 dowels into floor at 24 IN OC each way.
   4. Chamfer top edges 3/4 IN.
   5. Make faces smooth.
   6. Set anchor bolts for equipment.

3.5 PAINTING

A. See Section 09 91 13, and Section 09 91 23.

3.6 FIELD QUALITY CONTROL

A. Perform indicated tests to demonstrate workmanship, operation, and performance.
   1. Conduct tests in presence of Architect and, if required inspectors of agencies having jurisdiction.
   2. Arrange date of tests in advance with Architect, manufacturer and installer.
   3. Give minimum of 24 hours notice to all inspectors.
   4. Furnish or arrange for use of electrical energy, steam, water, diesel fuel, or gas required for tests.
   5. Furnish all lubricating materials required for test.

B. Repair or replace equipment and systems found inoperative or defective and retest.
   1. If equipment or system fails retest, replace it with products conforming with Contract Documents.
   2. Continue remedial measures and retests until satisfactory results are obtained.

C. Test equipment and systems as indicated for each item, unless otherwise recommended by manufacturer.

3.7 FINAL PERFORMANCE TEST

A. Perform panel load balance, short circuit, and freedom from ground, and ground test (including ground fault protection where provided).
   1. As part of putting systems in operation, provide tabulated results of load balance and voltage at each switchboard, panelboard and motor control center. Use true RMS measuring metering devices.
   2. Provide written report that all circuits have been energized and no short circuits exist.
   3. Provide neutral to ground resistance tests to prove neutral is grounded in only one location.
   4. Provide ground test at service entrance and provide report on resistance to earth of the grounding electrode system.

3.8 ADJUST AND CLEAN

A. Inspect all equipment and put in good working order.

B. Clean all exposed and concealed items.

C. Where new work occurs in existing areas where no other work has been done, clean area and restore to original condition.

3.9 PUTTING SYSTEMS IN OPERATION - START UP

A. Put all systems into satisfactory operation prior to final acceptance, at time agreed to by Contractor, Owner and Architect.

B. Operate all systems in good working order for period of 5 working days.

3.10 DEVICE MOUNTING

A. See symbol legend for devise mounting heights unless otherwise noted.

B. Dimensions are to center of device unless otherwise indicated.

C. Coordinate device locations with all equipment/furnishings abutting walls such as, but not limited to, architectural millwork, casework, lockers, mirrors, and equipment. Refer to architectural and casework/equipment elevations to facilitate coordination of device placement. Devices shall be relocated at Contractor's expense if conflict exists after installation.

D. Coordinate device mounting height with wainscoting where provided. Where top of wainscot and device mounting height overlaps, shift device down to provide 2 IN gap between top of device and top of wainscot.

3.11 IDENTIFICATION AND LABELING

A. Nameplates: Provide engraved laminated nameplates with white lettering for electrical equipment.
   1. Provide black nameplate(s) for equipment fed by normal distribution system.
   2. Coordinate color(s) of emergency system name plates with painting paragraph below.
   3. Letters:
      a. 1/4 IN high for equipment with cover plate under 12 IN wide.
      b. 1/2 IN high for equipment with cover plate over 12 IN wide:
   4. Attach with stainless steel screws.
   5. Switchgear, switchboard, distribution panel and motor control center nameplates:
      a. Center nameplate near top of first section. Label text to include:
         1) Equipment name and branch, i.e., "Panel XXXX - Life Safety Branch".
         2) Source, i.e., "Source - Switchboard XXXX".
      b. Provide similar nameplates for each main and feeder device. Mount label adjacent to or on cover of device. Label text to include:
         1) Description of load, i.e., "Load - Panelboard XXX".
   6. Panelboard nameplates:
      a. Center nameplate near top of each section. Lable text to include:
         1) Equipment name and branch, i.e., "Panel XXXX - Life Safety Branch".
         2) Source, i.e., "Source - Switchboard XXXX".
   7. Disconnect switches, transformers, contactors, thermal element switches, starters, capacitors, etc. nameplates:
      a. Center nameplate near top of face plate or cover. Lable text to include:
         1) Description of load, i.e., "Load - AHU-XXX".
         2) Source, i.e., "Source - MCC-XXXX".
   8. Transfer switches:
      a. Center nameplate near top of cover. Label text to include:
         1) Description of load, i.e., "Distribution Board XXXX - Life Safety Branch".
         2) Normal source, i.e., "Normal Source - Switchboard XXXX".
         3) Emergency source, i.e., "Emergency Source - Switchboard XXXX".
   9. Fire alarm, public address and other system control cabinet nameplates:
      a. Center nameplate near top of cover. Label text to include:
         1) Description of system, i.e., "Fire Alarm System Control Panel".
   10. Relays and relay cabinet nameplates:
      a. Center nameplate near top of cover. Label text to include:

1) Description of item controlled, applicable system or function and type of device, i.e., "AHU-XXX FA Shut Down Relay" or "Exterior Lighting Circuit XX-X Control Relay".

B. Flash hazard warning signs: Provide for all switchboards, panelboards, and motor control centers per NEC Article 110.

C. Device plates: See Section 26 27 26.

D. Paint outlet boxes, junction boxes and enclosures, except switchboard and panelboard enclosures, for emergency circuits as follows:
   1. Fire Alarm System: Red.
   2. Emergency System: Yellow.

E. Paint all emergency system feeder conduits with 2 IN wide band 10 FT on center as scheduled in paragraph(s) above.
   1. Pressure-sensitive, color-impregnated tape will be acceptable.

F. High voltage signs:
   1. All distribution equipment rated over 600 volts and/or pull and junction boxes containing conductors rated over 600 volts shall have a sign posted on the front and rear as applicable:
      a. 1 to 1-1/2 IN high red letters stenciled on a 3 IN high white background.
      b. Sign shall read, "DANGER -- HIGH VOLTAGE".

END OF SECTION

This page intentionally left blank.

SECTION 26 05 19
LOW VOLTAGE ELECTRICAL POWER CONDUCTORS AND CABLES

PART 1 - GENERAL

1.1 SUMMARY

A. Furnish all labor, materials, tools, equipment, and services for Low Voltage Electrical Power Conductors and Cables, as indicated, in accordance with provisions of Contract Documents.

B. Completely coordinate with work of other trades.

C. Related Specification Sections include but are not necessarily limited to:
1. Division 01 - General Requirements.
2. Section 01 33 00 - Submittal Procedures.
3. Section 26 00 10 - Electrical General Requirements.

1.2 REFERENCES

A. Institute of Electrical and Electronics Engineers, Inc. (IEEE):
1. 1202, Standard for Flame-Propagation Testing of Wire and Cable.

B. Insulated Cable Engineers Association (ICEA):
1. S-58-679, Standard for Control Cable Conductor Identification.

C. National Electrical Manufacturers Association (NEMA):
1. ICS 4, Industrial Control and Systems: Terminal Blocks.

D. National Electrical Manufacturers Association/Insulated Cable Engineers Association (NEMA/ICEA):
1. WC 57/S-73-532, Standard for Control Cables.
2. WC 70/S-95-658, Non-Shielded Power Cables Rated 2000 Volts or Less for the Distribution of Electrical Energy.

E. National Fire Protection Association (NFPA):
1. 70, National Electrical Code (NEC).
2. 262, Standard Method of Test for Flame Travel and Smoke of Wires and Cables for Use in Air-Handling Spaces.

F. Telecommunications Industry Association/Electronic Industries Alliance (TIA/EIA):
1. 598-C, Optical Fiber Cable Color Coding.

G. Telecommunications Industry Association/Electronic Industries Alliance/American National Standards Institute (TIA/EIA/ANSI):
1. 568, Commercial Building Telecommunications Cabling Standard.

H. Underwriters Laboratories, Inc. (UL):
1. 44, Standard for Safety Thermoset-Insulated Wires and Cables.
2. 83, Standard for Safety Thermoplastic-Insulated Wires and Cables.
3. 467, Standard for Safety Grounding and Bonding Equipment.
4. 486A, Standard for Safety Wire Connectors and Soldering Lugs for use with Copper Conductors.
5. 486C, Standard for Safety Splicing Wire Connections.
6. 510, Standard for Safety Polyvinyl Chloride, Polyethylene and Rubber Insulating Tape.
7. 1277, Standard for Safety Electrical Power and Control Tray Cables with Optional Optical-Fiber Members.

8. 1581, Standard for Safety Reference Standard for Electrical Wires, Cables, and Flexible Cords.
9. 2250, Standard for Safety Instrumentation Tray Cable.

1.3 DEFINITIONS

A. Cable: Multi-conductor, insulated, with outer sheath containing either building wire or instrumentation wire.

B. Instrumentation Cable:
   1. Multiple conductor, insulated, twisted or untwisted, with outer sheath.
   2. The following are specific types of instrumentation cables:
      a. Analog signal cable:
         1) Used for the transmission of low current (e.g., 4-20mA DC) or low voltage (e.g., 0-10 Vdc) signals, using No. 16 AWG and smaller conductors.
         2) Commonly used types are defined in the following:
            a) TSP: Twisted shielded pair.
            b) TST: Twisted shielded triad.

C. Power Cable: Multi-conductor, insulated, with outer sheath containing building wire, No. 8 AWG and larger.

D. Control Cable: Multi-conductor, insulated, with outer sheath containing building wires, No. 14, No. 12 or No. 10 AWG.

E. Building Wire: Single conductor, insulated, with or without outer jacket depending upon type.

1.4 SUBMITTALS

A. Shop Drawings:
   1. See Specification Section 01 33 00 for requirements for the mechanics and administration of the submittal process.
   2. Product technical data:
      a. Provide submittal data for all products specified in PART 2 of this Specification Section except:
         1) Wire connectors.
         2) Insulating tape.
         3) Cable lubricant.
      b. See Specification Section 26 00 10 for additional requirements.

1.5 QUALITY ASSURANCE

A. Regulatory Requirements:
   1. Electrical Components, Devices, and Accessories: Listed and labeled as defined in NFPA 70, Article 100, by a testing agency acceptable to authorities having jurisdiction, and marked for intended use.
   2. Comply with NFPA 70.

PART 2 - PRODUCTS

2.1 ACCEPTABLE MANUFACTURERS

A. Subject to compliance with the Contract Documents, the following manufacturers are acceptable:
   1. Building wire, power and control cable and multiplex cable:
      a. Aetna Insulated Wire.

b. Alphawire.
c. Cerrowire.
d. Encore Wire Corporation.
e. General Cable.
f. Okonite Company.
g. Southwire Company.
h. American Insulated Wire Corp., a Leviton Company.

B. Splices and taps for smaller than No.6 AWG wire:
1. Base:
a. 3M.
b. Ideal Electric.
c. Heyco Molded Products.
d. Elastimold.
e. Buchanan Construction Products.
2. Other manufacturers desiring approval comply with Section 00 26 00.

2.2 MATERIALS

A. Building Conductors
1. Soft drawn, copper wire with 600 volt insulation, UL listed.
2. For feeders and branch circuits: Type THWN/THHN or XHHW.
3. For exterior feeder and branch circuits: Type XHHW.
4. For branch circuits served by GFCI circuit breakers: Type XHHW.
5. Use no wire smaller than No.12 AWG, except as follows:
a. Smaller size wire may be used only where specifically indicated.
b. No.14 AWG may be used for pilot control and signal circuits.
6. Size conductors to match over current protective device unless larger conductors are indicated.
7. No. 10 AWG conductor to be used for 20 ampere, 120V circuits exceeding 30 M 100 FT.
8. No. 10 AWG conductor to be used for 20 ampere, 277V circuits exceeding 60 M 200 FT.
9. Conductors shall be stranded, except for conductors used in lighting and receptacle circuits which may be stranded or solid.
10. Surface mark with manufacturer's name or trademark, conductor size, insulation type and UL label.
11. Conform to NEMA/ICEA WC 70/S-95-658 and UL 83 for type THHN/THWN and THHN/THWN-2 insulation.
12. Conform to NEMA/ICEA WC 70/S-95-658 and UL 44 for type XHHW-2 insulation.

B. Power Cable:
1. Conductor shall be copper with 600 V rated insulation. 75 DegC temperature rated insulation. Where installed in raceway exposed to direct sunlight outside of the buildings, provide minimum 90 DegC temperature rated insulation.
2. Surface mark with manufacturer's name or trademark, conductor size, insulation type and UL label.
3. Conform to NEMA/ICEA WC 70/S-95-658 and UL 83 and UL 1277 for type THHN/THWN insulation with an overall PVC jacket.
4. Number of conductors as required, including a bare ground conductor.
5. Individual conductor color coding:
a. ICEA S-58-679, Method 4.
b. See PART 3 of this Specification Section for additional requirements.
6. Conform to NFPA 70, Type TC.

C. Control Cable:
1. Conductor shall be copper with 600 V rated insulation.

2. Surface mark with manufacturer's name or trademark, conductor size, insulation type and UL label.
3. Conform to NEMA/ICEA WC 57/S-73-532 and UL 83 and UL 1277 for type THHN/THWN insulation with an overall PVC jacket.
4. Number of conductors as required, provided with or without bare ground conductor of the same AWG size.
    a. When a bare ground conductor is not provided, an additional insulated conductor shall be provided and used as the ground conductor (e.g., 6/c No. 14 w/g and 7/c No. 14 are equal).
5. Individual conductor color coding:
    a. ICEA S-58-679, Method 1, Table E-2.
    b. See PART 3 of this Specification Section for additional requirements.
6. Conform to NFPA 70, Type TC.

D. Electrical Equipment Control Wire:
1. Conductor shall be copper with 600 V rated insulation.
2. Conductors shall be stranded.
3. Surface mark with manufacturer's name or trademark, conductor size, insulation type and UL label.
4. Conform to UL 44 for Type SIS insulation.
5. Conform to UL 83 for Type MTW insulation..

E. Wire Connectors:
1. Twist/screw on type:
    a. Insulated pressure or spring type solderless connector.
    b. 600 V rated.
    c. Ground conductors: Conform to UL 486C and/or UL 467 when required by local codes.
    d. Phase and neutral conductors: Conform to UL 486C.
2. Compression and mechanical screw type:
    a. 600 V rated.
    b. Ground conductors: Conform to UL 467.
    c. Phase and neutral conductors: Conform to UL 486A.
3. Terminal block type:
    a. High density, screw-post barrier-type with white center marker strip.
    b. 600 V and ampere rating as required, for power circuits.
    c. 600 V, 20 ampere rated for control circuits.
    d. 300 V, 15 ampere rated for instrumentation circuits.
    e. Conform to NEMA ICS 4 and UL 486A.

F. Insulating and Color Coding Tape:
1. Pressure sensitive vinyl.
2. Premium grade.
3. Heat, cold, moisture, and sunlight resistant.
4. Thickness, depending on use conditions: 7, 8.5, or 10 mil.
5. For cold weather or outdoor location, tape must also be all-weather.
6. Color:
    a. Insulating tape: Black.
    b. Color coding tape: Fade-resistant color as specified herein.
7. Comply with UL 510.

G. Splices and taps for smaller than No.6 AWG wire:
1. 3M, "Scotchlok" or "Hyflex".
2. Ideal "Wingnut" or "Wirenut".
3. Heyco.
4. Elastimold insulated conical spring-type connectors.

H. Splices and taps for No.6 AWG wire and larger: Use compression connectors with prestretched insulation to equal insulation of wire being spliced.

I. Splices and taps - General: Do not make splices and taps with crimp or indenter-type connectors.

J. Pulling lubricant: Do not use cable pulling lubrication compound containing petroleum or other products which may deteriorate insulation.

K. Color coding: Color code all conductors in accordance with NEC as follows:
   1. Color code all wiring.
   2. Use following colors in lighting and power wiring:

	120/208 VOLT	277/480 VOLT
Phase 1	Black	Brown
Phase 2	Red	Orange
Phase 3	Blue	Yellow
Neutrals	White	Gray
Ground	Green	Green

   3. Isolated equipment grounding conductor: Green with one or more yellow stripe(s).
   4. Color coding of ends only will be acceptable for feeder phase conductors.
   5. Color coding of ends only will be acceptable for neutral and grounding conductors number 4 AWG and larger.

PART 3 - EXECUTION

3.1 INSTALLATION

A. Lighting and receptacle home runs indicated are for identification purposes only.

B. Install no more than 3 phase conductors in one conduit with dedicated neutral conductor each phase. This excludes ground wire. The neutral conductor shall be considered as a current carrying conductor.

C. Run panelboard and motor feeders in individual conduits.

3.2 CONDUCTOR AND INSULATION APPLICATIONS

A. Installation:
   1. Permitted Usage of Insulation Types:
      a. Building wire and power and control cable in architectural and non-architectural finished areas.
      b. Building wire and power and control cable in conduit below grade.
   2. Type THHN/THWN and THHN/THWN-2:
      a. Building wire and power and control cable No. 8 AWG and smaller in architectural and non-architectural finished areas.
   3. Type SIS and MTW:
      a. For the wiring of control equipment within control panels and field wiring of control equipment within switchgear, switchboards, motor control centers.

B. Conductor Size Limitations:
   1. Feeder and branch power conductors shall not be smaller than No. 12 AWG unless otherwise indicated on the Drawings.
      a. Solid copper type conductors for No. 12 AWG and No. 10 AWG.
   2. Control conductors shall not be smaller than No. 14 AWG unless otherwise indicated on the Drawings.

3. Instrumentation conductors shall not be smaller than No. 18 AWG unless otherwise indicated on the Drawings.

C. Color Code All Wiring as Follows:
1. Building wire:

	240 V, 208 V, 240/120 V, 208/120 V	480 V, 480/277 V
Phase 1	Black	Brown
Phase 2	Red *	Orange
Phase 3	Blue	Yellow
Neutral	White	White or Gray
Ground	Green	Green

* Orange when it is a high leg of a 120/240 V Delta system.

a. Conductors No. 6 AWG and smaller: Insulated phase, neutral and ground conductors shall be identified by a continuous colored outer finish along its entire length.
b. Conductors larger than No. 6 AWG:
1) Insulated phase and neutral conductors shall be identified by one (1) of the following methods:
a) Continuous colored outer finish along its entire length.
b) 3 IN of colored tape applied at the termination.
2) Insulated grounding conductor shall be identified by one (1) of the following methods:
a) Continuous green outer finish along its entire length.
b) Stripping the insulation from the entire exposed length.
c) Using green tape to cover the entire exposed length.
3) The color coding shall be applied at all accessible locations, including but not limited to: Junction and pull boxes, wireways, manholes and handholes.
2. Power cables ICEA S-58-679, Method 4 with:
a. Phase and neutral conductors identified with 3 IN of colored tape, per the Table herein, applied at the terminations.
b. Ground conductor: Bare.
3. Control cables ICEA S-58-679, Method 1, Table E-2:
a. When a bare ground is not provided, one (1) of the colored insulated conductors shall be re-identified by stripping the insulation from the entire exposed length or using green tape to cover the entire exposed length.
b. When used in power applications the colored insulated conductors used as phase and neutral conductors may have to be re-identified with 3 IN of colored tape, per the Table herein, applied at the terminations.

D. Install all wiring in conduit unless otherwise indicated on the Drawings.

E. Feeder, branch, and control circuits shall not be combined in a raceway, cable tray, junction or pull box, except as permitted in the following:
1. Where specifically indicated on the Drawings.
2. Where field conditions dictate and written permission is obtained from the Engineer.
3. Control circuits shall be isolated from feeder and branch power and instrumentation circuits but combining of control circuits is permitted.
a. The combinations shall comply with the following:
1) 12 Vdc, 24 Vdc and 48 Vdc may be combined.
2) 125 Vdc shall be isolated from all other AC and DC circuits.
3) AC control circuits shall be isolated from all DC circuits.

4. Multiple branch circuits for lighting, receptacle and other 120 Vac circuits are allowed to be combined into a common raceway.
    a. Contractor is responsible for making the required adjustments in conductor and raceway size, in accordance with all requirements of the NFPA 70, including but not limited to:
        1) Up sizing conductor size for required ampacity de-ratings for the number of current carrying conductors in the raceway.
        2) The neutral conductors may not be shared.
        3) Upsizing raceway size for the size and quantity of conductors.

F. Splices and terminations for the following circuit types shall be made in the indicated enclosure type using the indicated method.
1. Feeder and branch power circuits:
    a. Device outlet boxes:
        1) Twist/screw on type connectors.
    b. Junction and pull boxes and wireways:
        1) Twist/screw on type connectors for use on No. 8 and smaller wire.
        2) Compression, mechanical screw or terminal block or terminal strip type connectors for use on No. 6 AWG and larger wire.
    c. Motor terminal boxes:
        1) Twist/screw on type connectors for use on No. 10 AWG and smaller wire.
        2) Insulated mechanical screw type connectors for use on No. 8 AWG and larger wire.
    d. Manholes or handholes:
        1) Twist/screw on type connectors pre-filled with epoxy for use on No. 8 AWG and smaller wire.
        2) Watertight compression or mechanical screw type connectors for use on No. 6 AWG and larger wire.
2. Control circuits:
    a. Junction and pull boxes: Terminal block type connector.
    b. Manholes or handholes: Twist/screw on type connectors pre-filled with epoxy.
    c. Control panels and motor control centers: Terminal block or strips provided within the equipment or field installed within the equipment by the Contractor.
3. Non-insulated compression and mechanical screw type connectors shall be insulated with tape or hot or cold shrink type insulation to the insulation level of the conductors.

G. Insulating Tape Usage:
1. For insulating connections of No. 8 AWG wire and smaller: 7 mil vinyl tape.
2. For insulating splices and taps of No. 6 AWG wire or larger: 10 mil vinyl tape.
3. For insulating connections made in cold weather or in outdoor locations: 8.5 mil, all weather vinyl tape.

3.3 FIELD QUALITY CONTROL

A. Testing: Perform each electrical test and visual and mechanical inspection stated in NETA ATS (Acceptance Testing Specifications), Section 7.3.1. Certify compliance with test parameters.

B. Test Reports: Prepare a written report to record:
1. Test procedures used.
2. Test results that comply with requirements.
3. Test results that do not comply with requirements and corrective action taken to achieve compliance with requirements

END OF SECTION

This page intentionally left blank.

SECTION 26 05 26
GROUNDING AND BONDING FOR ELECTRICAL SYSTEMS

PART 1 - GENERAL

1.1 SUMMARY

A. Furnish all labor, materials, tools, equipment, and services for Grounding and Bonding for Electrical Systems, as indicated, in accordance with provisions of Contract Documents.

B. Completely coordinate with work of other trades.

1.2 SUBMITTALS

A. Product Data:
   1. Technical data on connectors.

PART 2 - PRODUCTS

2.1 ACCEPTABLE MANUFACTURERS

A. Exothermic weld kits:
   1. Base:
      a. Cadweld.

B. Compression fittings:
   1. Base:
      a. Burndy.

C. Other manufacturers desiring approval comply with Section 00 26 00.

2.2 MATERIALS

A. Wire and cable: See Section 26 05 19.
   1. Main ground: Copper conductor, sized as required by appropriate service grounding conductor table of NEC.
   2. Grounding copper conductor for non-metallic conduit and ducts: Copper bar or insulated conductor, sized in accordance with NEC or as indicated.

B. Conduit: See Section 26 05 33.

C. Grounding clamp connections: Clean contact surfaces, tinned and sweated during bolting.

D. Grounding type insulated bushings: See Section 26 05 33.

PART 3 - EXECUTION

3.1 GENERAL

A. Ground all neutral conductors, conduit systems, cabinets, equipment, motor frames, etc., in accordance with NEC and applicable codes.

B. Locate neutral ground disconnecting link or links in main switchboard so that low-voltage neutral bar with all interior secondary neutrals can be isolated from common equipment grounding bus.

3.2 MAIN GROUND

A. Install main grounding conductor in steel conduit and connect to grounding electrode system using an exothermic weld or UL listed compression fitting.
   1. Unless otherwise indicated, install main ground unspliced in exposed conduit.
   2. Make connections easily accessible for inspection, not underground or concealed in floors or walls.
   3. Provide grounding electrode system in accordance with NEC.
   4. Resistance to earth of the grounding electrode system shall not exceed 25 ohms.

B. Bond grounding conductor to conduit at entrance and exit, of same type and quality as other conductors in building.

C. Install grounding jumper of same size around water meter using ground clamps.

3.3 DISTRIBUTION

A. Make all metallic raceway fittings and grounding clamps tight to insure that equipment grounding system will operate continuously at ground potential to provide low impedance current path to insure proper operation of overcurrent devices during possible ground fault currents.

B. Do not solder grounding circuit connections.

C. Where metallic conduits terminate without mechanical connection to metallic housing (switchboards, motor control centers, etc.), provide each conduit with grounding type insulated bushing.
   1. Connect each bushing to grounding bus in equipment with bare copper conductor.

D. In nonmetallic conduits or ducts maintain continuity of equipment grounding system by bar or conductor installed and connected by approved method to conductive noncurrent-carrying equipment at both ends.

E. Ground all conduit, panelboards, receptacles, accessible fixtures, switchgear, transformers, motors and motor equipment.

F. Make ground continuity positive throughout entire project.

PART 4 - MEASUREMENT AND PAYMENT

A. Refer to Section 01 22 00, Part 4, regarding measure and payment.

B. Work of this Section is considered incidental to work under other payment items and no separate measurement and payment will be made to the Contractor for Work of this Section. Work of this section shall include furnishing all labor, materials, tools, equipment, supplies, supervision, and incidentals necessary as described by the Contract Documents.

END OF SECTION

SECTION 26 05 33
CONDUITS

PART 1 - GENERAL

1.1 SUMMARY

A. Furnish labor, materials, tools, equipment, and services for Conduits, as indicated, in accordance with provisions of Contract Documents.

B. Conduit runs are diagrammatic. Verify and coordinate locations in field.

C. Completely coordinate with work of other trades.

1.2 SECTION INCLUDES

A. Rigid Metal Conduit (RMC).

B. Electrical Metallic Tubing (EMT).

C. Flexible Metal Conduit (FMC).

D. Liquidtight Flexible Metal Conduit (LFMC).

E. Rigid Nonmetallic Conduit (RNC).

F. Conduit fittings.

G. Expansion fittings.

H. Inserts and attachments.

I. Supports, sleeves and seals.

1.3 QUALITY ASSURANCE

A. Regulatory Requirements:
   1. Electrical Components, Devices, and Accessories shall be listed and labeled in accordance with NFPA 70, Article 100, by testing agency acceptable to authorities having jurisdiction, and marked for intended use.

B. Certifications:
   1. Conduit: Stamp each length with name or trade mark of manufacturer and affix UL label.

1.4 SUBMITTALS

A. Product Data:
   1. Manufacturer's data for each product specified.
   2. IBC Certificates of Compliance.

B. Shop Drawings: Signed and sealed by a qualified Professional Engineer.
   1. Design Calculations: Calculate requirements for selecting seismic restraints.
   2. Show fabrication and installation details of components for raceways.
   3. Detail assemblies and indicate dimensions, weights, loads, required clearances, method of field assembly, components, and location and size of each field connection.

C. Coordination Drawings:
   1. Reflected ceiling plans drawn to scale and coordinating penetrations and ceiling-mounted items. Show the following:
      a. Ceiling suspension assembly members.

b. Method of attaching hangers to building structure.
c. Size and location of initial access modules for acoustical tile.
d. Ceiling-mounted items including lighting fixtures, diffusers, grilles, speakers, sprinklers, access panels, and special moldings.

2. Contractor to submit shop drawings showing actual conduit layout, routing, and spacing of spare conduits on platform TC-C of the SBTC that will provide service to the future RPRP platform extension.
   a. Provide 3/8" nylon pull rope in each conduit.
   b. Cap conduits and protect in place.

D. Manufacturer Seismic Qualification Certification: Submit certification that enclosures, cabinets, accessories, and components will withstand seismic forces defined in 26 05 48 – Vibration and Seismic Controls for Electrical Systems. Include the following:
1. Basis for Certification: Indicate whether withstand certification is based on actual test of assembled components or on calculation.
   a. The term "withstand" means "the unit will remain in place without separation of any parts from the device when subjected to the seismic forces specified and the unit will be fully operational after the seismic event."
2. Dimensioned Outline Drawings of Equipment Unit: Identify center of gravity and locate and describe mounting and anchorage provisions.
3. Detailed description of equipment anchorage devices on which the certification is based and their installation requirements.

1.5 COORDINATION

A. Coordinate layout and installation of raceways, boxes, enclosures, cabinets, and suspension system with other construction that penetrates ceilings or is supported by them, including light fixtures, HVAC equipment, fire-suppression system, and partition assemblies

PART 2 - PRODUCTS

2.1 ACCEPTABLE MANUFACTURERS

A. As noted for each type listed below.

B. Other manufacturers desiring approval comply with Section 00 26 00.

2.2 MATERIALS

A. RIGID METAL CONDUIT (RMC):
1. Acceptable Manufacturers:
   a. Base:
      1) Allied Tube and Conduit Corp.
   b. Optional:
      1) Republic Conduit.
      2) Wheatland Tube.
2. Materials
   a. Hot dipped galvanized, or sherardized, including threads.
   b. Standard pipe thread with coupling; deliver with thread protector and end caps.
   c. Standards:
      1) NEMA/ANSI C80.1 – Electrical Rigid Steel Conduit – Zinc Coated (ERSC).
      2) UL 6 - Electrical Rigid Metal Conduit – Steel.

B. PVC COATED STEEL CONDUIT:
1. Acceptable Manufacturers:
   a. Base:

1) Perma-cote.
b. Optional:
1) Plasti-Bond.
2) Robroy Industries
2. Materials
a. Rigid steel conduit (RMC): Hot dipped galvanized or sherardized including threads. 40 mil PVC exterior coating, 2 mil urethane interior coating.
b. Standard pipe thread with coupling; deliver with thread protector and end caps.
c. Standards:
1) NEMA/ANSI C80.1 – Electrical Rigid Steel Conduit – Zinc Coated (ERSC).
2) UL 6 - Electrical Rigid Metal Conduit – Steel.

C. ELECTRICAL METAL TUBING (EMT):
1. Acceptable Manufacturers:
a. Base:
1) Allied Tube and Conduit Corp.
b. Optional:
1) Republic Conduit.
2) Wheatland Tube.
2. Materials
a. Electrical Metal Tubing (EMT): Galvanized steel of thin wall thickness.
b. Standards:
1) Nema/ANSI C80.3 –Steel Electrical Metal Tubing (EMT).
2) UL 797 - Electrical Metallic Tubing – Steel.

D. FLEXIBLE METAL CONDUIT (FMC):
1. Acceptable Manufacturers:
a. Base:
1) Anamet Electrical
b. Optional:
1) Electri-Flex.
2) AFC.
3) International Metal Hose.
2. Materials
a. Flexible Metal Conduit (FMC): Steel, hot dipped galvanized.
b. Standards:
1) UL 1 – Standard for Flexible Metal Conduit.

E. LIQUIDTIGHT FLEXIBLE METAL CONDUIT (LFMC):
1. Manufacturers based on specification compliance:
a. Base:
1) Anamet Electrical
b. Optional:
1) Electri-Flex.
2) AFC.
3) International Metal Hose.
2. Materials
a. Liquidtight Flexible Metal Conduit (LFMC): Steel, hot dipped galvanized with PVC jacket.
b. Standards:
1) UL 1660 – Standard for Liquid-Tight Flexible Nonmetallic Conduit.

F. RIGID NONMETALLIC CONDUIT (RNC):
1. Acceptable Manufacturers:
a. Base:
1) Carlon.

b. Optional:
1) Queen City Plastics.
2) Cantex

2. Materials
a. Rigid Nonmetallic Conduit (RNC): Polyvinyl chloride (PVC), Schedule 40 or 80, meeting minimum requirements of NEC.
b. Standards:
1) UL 651 - Standard for Schedule 40 and 80 Rigid PVC Conduit and Fittings.
2) NEMA TC-2 – Electrical Polyvinyl Chloride (PVC) Tubing and Conduit.

G. CONDUIT FITTINGS:
1. Acceptable Manufacturers:
a. Base:
1) Appleton Electric.
b. Optional:
1) Cooper Crouse-Hinds.
2) Killark.
3) Thomas & Betts.
4) O-Z/Gedney.

2. Materials
a. Standards:
1) ANSI/NEMA FB-1 – Fittings, Cast metal Boxes, and Conduit Bodies for Conduit, Electrical Metallic Tubing, and Cable.
2) UL 514B - Conduit, Tubing, and Cable Fittings.
b. RMC Fittings
1) Threaded cast ferrous alloy with corrosion resistant finish. Cast body with gasketted corrosion resistant screw cover and threaded hubs.
2) Not Approved: Zinc alloy and similar soft metal die castings.
c. EMT Fittings:
1) Steel compression-ring type .
2) Set screw type fitting with steel body and cup type screws.
3) Set screw type fitting with pressure-cast bodies for 3/4 IN conduit and smaller and steel body and cup type screws for 1 IN conduit and larger.
d. FMC Fittings:
1) Dry locations: Squeeze type, malleable iron, cadmium plated, straight and angle connectors for all sizes except twist-in connectors for 3/4 IN and below flexible metal conduit.
2) Damp or wet locations: liquid-tight connectors.
e. PVC Conduit Fittings:
1) PVC plastic solvent weld type, with threaded adapters as required.
f. Bushings:
1) Threaded, galvanized, malleable iron.
2) Bushings for conductors No.4 and larger: Separate insulated bushings.
a) Do not use insulated throat connectors.
3) Grounding bushings: With screw termination for green grounding wire.

H. EXPANSION FITTINGS:
1. Acceptable Manufacturers:
a. Base:
1) Cooper Crouse – Hinds
b. Optional:
1) O-Z/Gedney
2) Appleton Electric.

2. Materials
a. Description:

1) Watertight deflection type cast slip joint fitting for conduit, with flexible bonding conductor for continuity of ground through metallic conduit.

b. Design Standards:

1) O-Z/Gedney: Type DX.

2) Cooper Crouse – Hinds: Type XJG.

I. INSERTS AND ATTACHMENTS:

1. Select inserts and attachments to suit loading conditions.

a. See Division 3 for load limitations where more than one trade may be applying loads to device.

2. Inserts For Placement in Concrete Formwork:

a. Malleable iron, wedge with nut, galvanized finish.

b. Size inserts to suit threaded hanger rods.

3. Attachments to Existing Construction:

a. Malleable iron, wedge, galvanized finish.

4. Use plastic toggles where securing directly to drywall.

5. Attachments to existing construction are not permitted. See support details.

J. SUPPORTS, SLEEVES AND SEALS:

1. Conduit supports:

a. Standards:

1) UL 2239 - Hardware for the Support of Conduit, Tubing, and Cable.

2) Listed and in compliance with other applicable standards.

b. Designed specifically for electrical installations.

c. Hangers:

1) Steel cadmium plated threaded rods with straps or clamp conduit holder.

d. Straps:

1) One-hole and two-hole malleable iron, hot-dipped galvanized or steel, cadmium or zinc plated.

e. Beam Clamps:

1) Malleable iron, hot-dipped galvanized or cadmium plated.

f. Channels and Fittings:

1) Channels: Hot-dipped galvanized.

2) Fittings: Galvanized.

g. Trapeze assemblies:

1) Constructed from channels and supported by at least two (2) threaded rods attached to building structure.

h. Do not use following to support conduit:

1) Wire including ceiling support wires.

2) Perforated strap hangers.

3) Plastic or nylon tie wraps.

2. Sleeves:

a. Black iron pipe, RMC sized to accommodate work passing through.

3. Sealer for sleeves and openings around conduit:

a. UL listed for assembly.

b. See Section 07 84 00.

4. Sealer for use inside conduits:

a. Acceptable Manufacturers:

1) Base:

a) Arnco.

2) Optional:

a) Polywater .

b. Materials

1) Description:

a) Watertight / Air tight foam sealant for electrical conduit.

b) Listed for application with electrical wiring and conduit.
2) Design Standards:
a) Arnco: Hydra-Seal.
b) Polywater: FST Duct Sealant.

K. DUCTBANK ACCESSORIES:
1. Acceptable Manufacturers:
a. Base:
1) Cantex.
b. Optional:
1) Carlon.
2) GS Industries
3) Thomas & Betts.
2. Conduit supports:
a. Shall be designed specifically for electrical installations.

PART 3 - EXECUTION

3.1 SCHEDULE OF CONDUIT UTLIIZATION

A. Use no conduit smaller than 3/4 IN.

B. Size conduit in accordance with NEC unless indicated larger.

C. Rigid Metal (Steel) Conduit (RMC) shall be used in following locations unless otherwise noted:
1. Outdoors Exposed.
2. In exterior masonry walls.
3. In wet locations.
4. For exposed interior runs below 10 FT above finished floor unless otherwise indicated.
5. For feeders over 600 volts.
6. In explosion-proof areas.

D. Use PVC coated steel conduit in corrosive areas as noted.

E. EMT shall be used for other 600 volt and below dry applications as follows:
1. Concealed in walls or above finished ceilings.
2. Exposed EMT may be used below 10 FT level in following locations:
a. From floor to ceiling in electrical equipment rooms.
b. Directly above motor control centers in locations other than electrical equipment rooms.
c. Directly above junction boxes or control panels associated with elevators or mechanical equipment with conduit termination point of 6 FT or more above floor.

F. Flexible steel conduit:
1. For connection to equipment subject to vibration.
2. Conduit length not to exceed 6 feet.
3. Use liquid-tight flexible conduit for applications, including but not limited to:
a. All damp and wet locations.
b. Dietary production and dishwashing areas.
c. Mechanical pumps.
d. Laboratory casework.
4. For connection to lighting fixtures above suspended ceilings.
5. In listed office furnishings.
6. In architectural millwork and casework.
7. Where fished into existing walls or ceilings, not otherwise accessible and not subject to physical damage.

G. PVC conduit may be used subject to following:

1. Do not use exposed PVC conduit unless otherwise noted.
2. Provide a 600 volt, insulated, green grounding conductor in each PVC conduit.
   a. Power circuits: Proper ampacity per NEC.
   b. Communications circuits: No.12 AWG minimum.
3. 45 DEG and greater bends in PVC conduit runs shall be made with rigid steel conduit.
4. Schedule 80 PVC conduit may be used for grounding electrode system and telecommunications ground backbone runs below and above grade and stubs through concrete slabs on grade.
5. Direct burial Schedule 40 PVC or concrete encased Type EB may be used as follows:
   a. Exterior Lighting: See Section 26 56 00.
   b. Underground Ducts and Raceways for Electrical Systems: See Section 26 05 43.
   c. Voice and data systems where underground and in or under concrete slabs on grade.
   d. Underground and concrete encased conduits over 600 volts.

3.2 INSTALLATION

A. Unless otherwise noted install all conduits concealed within walls and above finished ceilings.

B. Do not run horizontally in CMU.

C. Apply Appleton TLC or T and B Kopr-Shield joint compound to conduit threads where installed underground or exposed to weather.

D. Provide separate conduit systems for telephone, exit signs, fire alarm, emergency lighting, and other communications systems, unless otherwise indicated.
   1. Separate systems of different voltage classes into different conduit systems unless otherwise noted.
   2. Provide dedicated junction boxes and pull boxes to separate wiring systems.
   3. Do not combine 208/120 and 480/277V wiring in common wireways or pull boxes.
   4. Keep communications systems separated.

E. Where practical, group homeruns to same panelboard.
   1. Do not enclose more than three single phase circuits or one three phase circuit in one raceway unless noted otherwise.
   2. Exposed overhead conduit may be used in mechanical, electrical and other equipment rooms except conduit drops to following:
   3. Where finished walls are provided, conduit drops to wiring devices, fire alarm devices, telecommunications outlets and other flush mounted devices shall be concealed within finished walls.

F. Run non-buried conduit in straight lines at right angles to or parallel with walls, beams or columns.

G. Keep conduit away from uninsulated hot water and steam pipes.
   1. Where crossings are unavoidable, leave minimum 6 IN clearance.

H. Avoid running conduits underneath water lines except for crossings.

I. Do not cross conduit in front of access door in HVAC duct.

J. Only nylon or polyethylene rope shall be used to pull wire and cable in conduit systems.

K. Provide conduit support designed for building structural conditions to carry load imposed.

L. Provide inserts or fasteners to attach hangers to structure.
   1. Do not use drilled or explosive driven inserts in precast-prestressed concrete construction.
   2. Drilled or explosive driven inserts may not extend more than 1 IN into post-tensioned concrete construction.
   3. Attachment to metal roof deck may be by means of prepunched tabs, prepunched holes, or with screws in sides of ribs or toggle bolts in bottom of ribs.

4. Space hangers in joints between precast units minimum 4 IN from walls.

M. Protect inside of conduit from dirt and debris during construction by capping openings with tapered plugs or plastic caps.
   1. If moisture or debris gets into conduit remove before wire is drawn into place.

N. Make conduit field cuts square and ream to full size.
   1. Shoulder conduit in couplings.

O. Use trapeze assemblies to support multiple conduits.
   1. Coordinate layout to provide adequate access to cable tray assemblies if applicable.

P. Installation of conduit or rack of conduits shall not interfere with placement of specified luminaire.

Q. Hangers in roof deck:
   1. Do not extend above tops of ribs, or otherwise interfere with vapor retarder, insulation or roofing.

R. Support conduit systems from building structure or walls with approved hangers.
   1. Provide seismic bracing as required.
   2. Do not support from piping, ducts or support systems for piping or ducts.
   3. Do not support from ceiling or ceiling support systems.
   4. Do not install to prevent ready removal of equipment, piping, ducts or ceiling tiles.

S. Do not install conduit under pads for fans, pumps, boilers, or other machinery.

T. Seal and waterproof penetrations of floor slab at mechanical rooms above grade.
   1. Where required, provide firestop systems in accordance with Section 07 84 00.

U. Conduit shall not be installed in structural elements, i.e. concrete columns, beams, decks, or slabs unless otherwise noted.

V. Sum of angles in any conduit run shall not exceed 360 degrees.
   1. Install conduit body, junction box or pull box where additional bends are necessary.
   2. Install pull boxes every 100 FT in long conduit runs.
   3. Conduit body, junction box and pull box covers shall be accessible.
   4. Conduit bodies may be used as follows:
      a. On exposed runs at junctions, bends or offsets where splices are not required.
      b. Around outside corners of walls and equipment or around beams.
   5. Conduit bends:
      a. Make field bends with tools designed for conduit bending.
         1) Heating of metallic conduit to facilitate bending is not permitted.
      b. Hand conduit bender may be used on 3/4 IN RMC or EMT conduit and 1 IN EMT conduit.
         1) Use conduit bending machine for larger sizes.
      c. Make no bends with radius less than 12 times diameter of associated cable.
      d. No conduit bends shall not exceed 90 DEG.

W. Support suspended conduits within 12 IN of any change of direction of 45 DEG or greater.

X. Make joints in threaded conduit watertight with white nonleaded compound applied to male threads only.
   1. Cut square, ream smooth, and properly thread field joints to receive couplings.
   2. Do not use running threads.

Y. Neatly seal openings around conduits, etc., where they pass through fire rated construction or exterior walls or roof. Provide proper rated seal for fire-rated penetrations.

Z. Conduit passing through concrete wall or slab penetrations:

1. All core drilling, sleeves, block-outs or other penetrations must be approved by Structural Engineer prior to installation.
2. Space sleeves and core drills to insure minimum of three (3) times nominal trade diameter of largest adjacent conduit between sleeves or core drills.
3. Use block-outs for concentrations of conduits in confined area.

AA. No exterior horizontal roof supported conduit runs are permitted in lengths exceeding 6 FT unless indicated otherwise,.

BB. Empty conduits:
1. Install 3/8 IN minimum diameter polypropylene or nylon pull-line from end to end with tag at each end designating opposite terminus.
2. Cap conduits indicated to be stubbed out underground with glued-on PVC caps.

CC. Conduit stub-outs:
1. Extend conduit stub-out to cable tray system and attach to edge of tray with cable tray manufacturer recommended coupling.
2. Terminate conduit with insulating bushing.

DD. Conduits stubbed into manholes:
1. Terminate metal conduit with insulating bushing.
2. Terminate non-metallic conduit with bell ends.

EE. All conduit stub-outs on site shall be identified in one of following ways and noted on as-built drawings provided to Owner:
1. Permanently marked.
2. Dimension from landmark on site or building.
3. Using a Global Positioning System (GPS) device accurate to within 6 IN.

3.3 INSTALLATION - BELOW GRADE NON-CONCRETE ENCASED CONDUIT

A. Maintain depth of conduit at least 30 IN below finished grade.
1. Remove materials from trench that could damage conduit.
2. Use sand or selected material for bedding and first layer of backfill.

B. Use long radius bends and deflection couplings for changes in direction.
1. Maintain a minimum radius of 36 IN.

C. Tighten taper-fit joints with light blows of a sledge hammer.
1. Dope threaded joints and tighten with tool.
2. Seal plastic joints around entire perimeter with chemical bonding agent.

D. Cap empty conduit.
1. Seal ends with approved waterproofing compound after conductors have been installed.

E. Provide rigid steel conduit elbows where non-metallic conduit emerges from underground, with threaded adapters for change of material.
1. Provide 36IN minimum radius or larger elbows as required by local utility company.

F. Do not place backfill until work is inspected and approved.

3.4 INSTALLATION - CONCRETE ENCASED CONDUIT (DUCTBANK)

A. Conduit design is based upon field assembly of raceways and spacers with concrete cast in place.

B. Unless shown otherwise, use Schedule 40 rigid nonmetallic conduit in concrete encasement.
1. Keep top of concrete envelope a minimum of 30 IN below finished grade.
2. Route conduit lines to clear interferences, but make linear wherever possible.
3. Use long radius bends and deflection couplings for changes in direction, maintaining a minimum radius of 36 IN.

4. Pitch conduit at 3 IN/100 FT (1:400) away from buildings and toward manholes for drainage.

C. Anchor conduit in place with plastic interlocking spacers 48 inches OC to prevent dislocation during concrete placement.
   1. Stagger joints horizontally and vertically.
   2. Tighten taper fit joints with light blows of sledge hammer.
   3. Dope threaded joints and tool tighten.
   4. Seal joints with a chemical bonding agent.

D. Use rigid steel conduit elbows where conduit emerges from underground.
   1. Provide threaded adapters for change of material.
   2. Provide 36IN minimum radius elbows or as required by local utility company.

E. Provide protection for duct lines in areas of heavy loading such as under footings, foundations, walls, driveways, streets, parking areas and railroads, and in locations where such areas might be extended, such as future roadways.
   1. In addition, provide protection for conduit where soil has inadequate bearing capacity, and in other locations indicated.
   2. Extend protection 60 IN on each side of such areas.
   3. For protection of concrete encased conduit, provide reinforcing steel in concrete envelope unless shown otherwise.
   4. Use No. 4 steel reinforcing bars unless indicated otherwise.

F. Provide markers so that underground conduit locations can be visually determined from grade.
   1. Markers: 4 IN diameter by 24 IN long non-metallic conduit filled with concrete.
   2. Cast an identifying letter in visible end of each duct, E for electric and T for telephone. Mount top of marker 2 IN above grade.
   3. Provide markers every 100 FT in straight runs; at changes in direction; at building and manhole walls; and on each side of paved areas.
   4. Do not install markers in paved areas.

3.5 INSTALLATION - DUCTLINE IDENTIFICATION

A. Provide identification for conduits not encased in concrete.
   1. Use warning tape for direct buried conduits.
   2. Use concrete colorant for concrete encased conduit.
   3. For warning tape, backfill trench to within 12 IN of finished grade.
   4. Install tape continuously along entire length of trench, and complete backfill operation.

B. See Section 26 05 43 for concrete colorant and warning tape.

3.6 INSTALLATION - EMPTY CONDUITS

A. Arrange empty conduits for easy installation of future cables.
   1. Cap conduits in accessible locations.

B. Provide a draw line in each empty conduit, tagged at each end with identification and location of other end.
   1. For draw line , provide 3/8 IN minimum diameter polypropylene or nylon pull-line from end to end with tag at each end designating opposite terminus, or other approved means

3.7 INSTALLATION - CONNECTIONS AND FITTINGS

A. Install rigid conduits squarely into boxes.
   1. Rigidly clamp to box with locknut on outside and inside and provide bushing on inside.

B. Fit all conduit ends at switch and outlet boxes with approved lock nuts and bushing forming approved tight bond with box when screwed tightly in place.

C. Above lay-in tile ceilings, make connections to lay-in type fixtures with flexible steel conduit no longer than 6 FT.
   1. Arrange conduit and box systems for easy removal of lay-in ceiling.

D. Connect switch legs for narrow switches in hollow metal jamb posts using 1/2 IN flexible steel conduit.

E. Make motor and equipment connections with flexible steel conduit in dry areas and liquid-tight for damp and wet locations, not exceeding 24 IN length.

F. Provide expansion joint fittings as follows:
   1. On conduit at all building expansion or control joints where conduit is rigidly attached to structure.
   2. Where necessary to compensate for thermal expansion and contraction.
   3. Flexible metal conduit may be used for expansion fittings on runs smaller than 1 IN where exposed, or concealed above suspended ceilings.
      a. Leave slack in conduit for movement.
      b. Fasten on each side of joint.

G. Provide junction box with ductseal on raceways subject to different temperatures including but not limited to:
   1. Conduits passing from interior to exterior of structure.
   2. Conduits serving cold storage rooms, freezers and refrigeration equipment.

H. Provide sealing fittings on rigid galvanized conduit in hazardous areas and install in accordance with NEC.

I. When roof exhaust fans are equipped with housing conduit entries and integral disconnects, install conduit to roof exhaust fans through fan housing with no conduit exposed.

END OF SECTION

This page intentionally left blank.

SECTION 26 05 34
BOXES

PART 1 - GENERAL

1.1 SUMMARY

A. Furnish labor, materials, tools, equipment, and services for Boxes, as indicated, in accordance with provisions of Contract Documents.

B. Completely coordinate with work of other trades.

1.2 QUALITY ASSURANCE

A. Reference Standards:
   1. UL 514A – Metallic Outlet Boxes.
   2. ANSI/NEMA FB-1 – Fittings, Cast metal Boxes, and Conduit Bodies for Conduit, Electrical Metallic Tubing, and Cable.
   3. ANSI/SCTE 77 Specification for Underground Enclosure Integrity.

1.3 SUBMITTALS

A. Shop Drawings:
   1. Dimensioned drawings indicating locations of all floor boxes.

B. Product Data:
   1. Describe configurations, finishes, colors, and dimensions for all of following:
      a. Floor boxes, hinged-cover enclosures, and cabinets.
      b. Provide IBC Certificates of Compliance

C. Shop Drawings: Signed and sealed by a qualified Professional Engineer.
   1. Design Calculations: Calculate requirements for selecting seismic restraints.
   2. Show fabrication and installation details of components for boxes, enclosures, and cabinets.
   3. Detail assemblies and indicate dimensions, weights, loads, required clearances, method of field assembly, components, and location and size of each field connection.

D. Coordination Drawings:
   1. Reflected ceiling plans drawn to scale and coordinating penetrations and ceiling-mounted items. Show the following:
      a. Ceiling suspension assembly members.
      b. Method of attaching hangers to building structure.
      c. Size and location of initial access modules for acoustical tile.
      d. Ceiling-mounted items including lighting fixtures, diffusers, grilles, speakers, sprinklers, access panels, and special moldings.

E. Manufacturer Seismic Qualification Certification: Submit certification that enclosures, cabinets, accessories, and components will withstand seismic forces defined in 26 05 48 – Vibration and Seismic Controls for Electrical Systems. Include the following:
   1. Basis for Certification: Indicate whether withstand certification is based on actual test of assembled components or on calculation.
      a. The term "withstand" means "the unit will remain in place without separation of any parts from the device when subjected to the seismic forces specified and the unit will be fully operational after the seismic event."
   2. Dimensioned Outline Drawings of Equipment Unit: Identify center of gravity and locate and describe mounting and anchorage provisions.

F. Detailed description of equipment anchorage devices on which the certification is based and their installation requirements.

PART 2 - PRODUCTS

2.1 OUTLET BOXES

A. Acceptable Manufacturers:
   1. Galvanized boxes and fittings:
      a. Base:
         1) Emerson Industrial – Appleton Electric
      b. Optional:
         1) Thomas & Betts –Steel City
         2) Hubbell Electrical Products - RACO
   2. Corrosion resistant and wet location boxes and fittings:
      a. Base:
         1) Thomas & Betts (Ocal)
      b. Optional:
         1) Robroy
   3. Box supporting brackets:
      a. Base:
         1) Erico/Caddy
   4. Other manufacturers desiring approval comply with Section 00 26 00.

B. Requirements:
   1. Minimum Size:
      a. 4 IN square or octagon.
      b. Depth as required.
   2. Lighting outlet boxes:
      a. Galvanized.
      b. Use extension and plaster rings as required.
      c. Verify proper depth with partition thickness.
      d. Provide with proper fittings to support and attach lighting fixtures.
      e. Support outlet boxes for luminaires and other ceiling-mounting devices in lay-in acoustical tile ceilings by bar hangers anchored to ceiling construction members which do not interfere with tile removal.
   3. Switch and receptacle boxes for concealed wiring:
      a. Galvanized.
   4. Exposed switch and receptacle boxes:
      a. Corrosion resistant, cast, malleable iron, with threaded hubs.
      b. Design Basis: Crouse-Hinds Type FS.
   5. Weatherproof receptacle boxes:
      a. Corrosion resistant cast malleable iron type, with threaded hubs and neoprene gasket.
      b. Design Basis: Crouse-Hinds Type FS.
   6. Concealed gang-switch and junction boxes not dimensioned:
      a. Galvanized.
   7. Boxes for 277 volt switches on opposite phases:
      a. Where multi-ganging boxes, provide barriers per NEC.
   8. Extension Rings:
      a. To suit conditions.
   9. Hardware:
      a. Grounding screw and connectors as required by wiring method.
   10. PVC coated steel boxes:
      a. Provide NEMA RN-1 compliant coating of PVC.

2.2 SUPPORTS

A. Acceptable Manufacturers:
   1. Box supporting brackets:
      a. Base:
         1) Caddy MEB1 and SGB Series.
   2. Far side box support:
      a. Base:
         1) Hubbell/RACO Catalog No. 978.
   3. Other manufacturers desiring approval comply with Section 00 26 00.

2.3 PULL AND JUNCTION BOXES

A. Acceptable Manufacturers:
   1. Galvanized boxes and fittings:
      a. Base:
         1) Appleton Electric.
      b. Optional:
         1) Hoffman
         2) Thomas & Betts.
         3) Hubbell Raco.
   2. Corrosion resistant boxes and fittings:
      a. Base:
         1) Thomas & Betts (Ocal)
      b. Optional:
         1) Robroy
   3. Other manufacturers desiring approval comply with Section 00 26 00.

B. Requirements:
   1. Minimum Size:
      a. 4 IN square.
      b. Depth as required.
   2. Galvanized steel, code gauge
   3. Cover:
      a. Same material as box, screw on type.

2.4 WATERTIGHT SPLICE AND PULL BOXES

A. Acceptable Manufacturers:
   1. Base:
      a. Hubbell Quazite.
   2. Other manufacturers desiring approval comply with Section 00 26 00.

B. Materials:
   1. Underground Enclosures:
      a. Polymer concrete, PC Style gasketted boxes, green color; provide ANSI/SCTE 77 tier load rating for application with solid base.
      b. Cover Logo: Electric for receptacle circuits; [Lighting for lighting circuits; Telephone for communication circuits].
      c. Stainless steel inserts and bolts.

2.5 FLUSH FLOOR BOXES

A. Acceptable Manufacturers:
   1. Base:
      a. Hubbell
   2. Optional:

a. Wiremold
b. Thomas and Betts
3. Other manufacturers desiring approval comply with Section 00 26 00.

B. Materials
1. General:
a. See Section 26 27 26 and electrical symbol legend for receptacle requirements.
b. Provide single service or combination power and communication boxes as indicated.
c. Floor boxes do not provide any fire separation or fire rating.
1) Floor boxes shall rely upon floor assembly components, physical dimensions, structural materials, etc., to provide fire separation and rating.
2. Flush in-floor box for duplex receptacle:
a. Dual level 4 IN round fully adjustable cast iron box.
1) Floors over 3 IN deep: Hubbell B-2536.
2) Floors 3 IN deep or less: Hubbell B-2537.
b. Round aluminum fitting cover, duplex flap: Hubbell SA-3725.
c. Round aluminum carpet flange: Hubbell SA-3182. Provide as required.
3. Eleven (11) gang flush in-floor box for power and communications: Wiremold RFB11
a. Concrete-tight stamped steel construction with 14 gauge sides and bottom and 10 GA steel top.
b. Nominal box dimensions, plus/minus 2 percent:
1) Length: 14.75 IN.
2) Width: 12.63 IN
3) Height: 6.13 IN.
4) Wiring volume: 3 156 cubic inches.
c. Access to each end of floor box shall be provided by concentric 1 IN and 1.25 IN knockouts.
d. Access from behind and below each multi-gang compartment shall be provided by concentric 1 IN and 1.25 IN knockouts.
e. Access from behind and below each single gang compartment shall be provided by concentric.75 IN and 1 IN or 1 IN and 1.25 knockouts.
f. External pre-pour adjustment shall be provided by at least 2 IN leveling screws.
g. Cover:
1) Cast aluminum.
2) Lid to be offered with solid, flush surface for tile, wood or terrazzo and an insert option for carpet inlay.
3) Egress to be provided by two 15/16 IN by 6-3/8 IN access doors.
4) Access door to fold under lid during cable exit for unobtrusive appearance and mechanical protection.
4. Four (4) compartment flush in-floor box for power and communications: Wiremold RFB4
a. Cast iron floor box for use on grade and elevated slabs.
b. Nominal box dimensions (plus/minus 2 percent):
1) Length: 14.5 IN.
2) Width: 11.88 IN
3) Height: 3.44 IN.
4) Wiring volume: Two compartments at 3 36 cubic inches and two at 3 27 cubic inches.
c. Provide four independent wiring compartments that allow capacity for up to four duplex receptacles and/or communication services.
d. Box shall permit tunneling from adjacent or compartments
e. Provide four 1 IN and four 1.25 IN conduit hubs.
f. Box shall be fully adjustable, providing maximum of 1.88 IN pre-pour adjustment, and a maximum of 0.75 IN after-pour adjustment.
g. Cover:

1) Activation covers shall be manufactured of die-cast aluminum or die-cast zinc.
   a) Provide brushed aluminum finish.
2) Activation covers shall be available as follows:
   a) Flanged (7.75 IN long by 6.56 IN wide) and flangeless (6.75 IN long by 5.56 IN wide) versions.
   b) With tile or carpet inserts.
   c) Flush covers.
   d) Covers with one 1 IN trade size screw plug opening and one combination 1.25 IN and 2 IN trade size screw plug openings for furniture feeds.
   e) Coordinate cover with floor finish.

PART 3 - EXECUTION

3.1 INSTALLATION

A. Mounting of outlet boxes for concealed wiring.
   1. Boxes mounted adjacent to studs shall be attached directly to stud with a minimum of 4 metal screws.
      a. Provide far-side box support on all boxes.
      b. Box side support shall be secured to box with drywall screws.
   2. Boxes that are not attached directly to studs shall be attached to box support bracket spanning studs.
      a. Bracket shall be attached to studs with 2 screws at each end.
      b. Attach box to bracket with 2 screws minimum.
   3. For outlets mounted above or below counters, benches, or furniture, coordinate location and mounting heights with casework, millwork and furniture.
      a. Adjust outlet mounting height to agree with required location for equipment served.
   4. Position outlet boxes to locate luminaires as shown on reflected ceiling plans.

B. Mounting of junction boxes in existing walls:
   1. Where junction boxes or device boxes are to be mounted in existing walls, sufficient drywall shall be removed to allow proper support of box by attaching directly to stud or bracket spanning 2 studs.
      a. Patch drywall and seal as required to return wall to original finish.

C. When a metallic junction box for electrical receptacles or switches is contained within a 1 or 2-HR rated fire or smoke wall of gypsum wall board construction and an opening is provided for box in surface of wall, area of opening shall not exceed 16 square inches, unless the junction box is protected by approved UL listed firestop
   1. Aggregate area of such junction boxes in a rated wall not protected by an approved firestop shall not exceed 100 square inches in 100 square feet of wall area as measured from floor to structural deck or rated membrane.
   2. Junction boxes with openings on opposite faces of rated walls shall have a horizontal separation of 24 inches as a minimum, regardless of box size, unless protected by an approved method.
   3. Locations of studs do not have any bearing on the above requirements, nor does the use of mineral wool fire safing alter these requirements.

D. Back to back boxes shall not be installed within the same stud cavity. Where installation within the same stud cavity is required based on device layout, unfaced glass or mineral fiber sound batting shall be installed to prevent sound transfer between rooms.

E. Fill unused punched-out openings in boxes with proper closures.

F. Use outlet boxes sized to accommodate quantity of conductors enclosed.

G. Provide pull boxes or junction boxes in conduit runs where indicated or as required to facilitate pulling of wires or making of connections. Make covers of all boxes accessible.

H. Spray paint inside of boxes and box cover per Section 26 00 10.

I. Identify circuit numbers on inside of box and coverplate.
   1. Identification shall be post painting of boxes.

J. Coordinate all floor boxes with available slab depth to assure that concrete depth is adequate for specified box.
   1. Set boxes level based on slab depth.

K. Poke-through assemblies shall permit all wiring to be completed at floor level.

END OF SECTION

SECTION 26 05 35
SURFACE METAL RACEWAYS AND WIREWAYS

PART 1 - GENERAL

1.1 SUMMARY

A. Furnish labor, materials, tools, equipment, and services for Surface Metal Raceways and Wireways, as indicated, in accordance with provisions of Contract Documents.

B. Completely coordinate with work of other trades.

1.2 SYSTEM DESCRIPTION

A. Design Requirements / Performance Requirements
   1. Field-wired surface metal raceways shall be provided for branch circuit wiring and voice, telecommunications, video and other low-voltage wiring as indicated.
   2. Wireways shall be provided to consolidate or splice conductors where indicated.

1.3 QUALITY ASSURANCE

A. Reference Standards:
   1. UL 5 – Standard for Surface Metal Raceways and Fittings.
   2. UL 870 – Wireways, Auxiliary Gutters and Associated Fittings
   3. NEMA WD 6 – Wiring Device Configurations.

1.4 SUBMITTALS

A. Product Data:
   1. Provide manufacturer's standard literature describing components identified below as specified for this project.
      a. Field-wired surface metal raceways.
      b. Wireways.

PART 2 - PRODUCTS

2.1 ACCEPTABLE MANUFACTURERS

A. Surface Metal Raceways:
   1. Base:
      a. Hubbell
   2. Optional:
      a. Mono-Systems
      b. Platt

B. Wireways:
   1. Base:
      a. Cooper Industries
   2. Optional:
      a. General Electric.
      b. Hoffman/Pentair.
      c. Schneider Electric/Square D.
      d. Eaton Electrical.

C. Other manufacturers desiring approval comply with Division 00.

2.2 MATERIALS

A. Surface Metal Raceways
   1. Wiremold types listed for quality and performance reference.
   2. Field-wired surface metal raceways:
      a. Two piece steel raceway with base and snap-on cover for mounting power, communication devices, or both.
      b. Wiremold 3000 Series:
         1) Nominal dimensions:
            a) Base and cover sections shall be a minimum of 0.040 IN wall thickness.
            b) Assembled base and cover shall be 2.75 IN wide by 1.50 IN deep with a 2 3.50 SQ IN cross sectional area.
      c. Provide fittings and accessories for a complete installation including but not limited to:
         1) Base fittings, flat internal and external elbows, entrance fittings, wire clips, cover clips, couplings, c-hangers and end caps.
         2) Colored fittings to match raceway.
         3) All fittings shall be supplied with base where applicable to eliminate mitering.
         4) Take-off fittings shall be provided as required to adapt different size raceways.
      d. Provide device brackets and associated faceplates for mounting devices in raceway including but not limited to following features:
         1) Circuit breaker housings shall be available to mount from one to three single-pole circuit breakers inline to raceway.
   3. Wiremold Series ALA3800 Isoduct:
         1) Wiring connections of these devices shall be completed at jobsite by contractor.
         2) Wiring connections of these devices shall be completed at jobsite by Owner.
         3) At elbows in communication compartments, provide radius control fittings.

B. Wireways:
   1. Schneider Electric/Square D types listed for quality and performance reference.
   2. Wireway: NEMA I lay-in wire-way.
      a. Provide fittings as required.
      b. Provide solid cover where passing through partitions.
      c. Design for continuous grounding.
      d. Provide general purpose, oil-tight, rain-tight and/or dust-tight type wireway as required.
      e. Knockouts shall be manufacturer's standard or as required.
      f. Size as indicated on the drawings. Where size is not indicated on drawings size per NEC.
      g. Hinged cover.
      h. Finish: Electro-coated gray epoxy paint over phosphate primer.
      i. Schneider Electric/Square D Class 5100.

PART 3 - EXECUTION

3.1 INSTALLATION

A. Comply with system layout drawings, detailed manufacturer's instruction sheets and system instruction sheets.

B. All raceway systems shall be mechanically continuous and connected to electrical outlets, boxes, device mounting brackets, and cabinets, in accordance with manufacturer's installation sheets.

C. Metal raceway shall be electrically continuous and bonded in accordance with National Electrical Code for proper grounding.

D. Mount surface raceway and wireways on walls or support channels as indicated in manufacturer's instruction sheets.
   1. Support raceway at intervals not exceeding 5 FT.

E. In unfinished spaces, feed raceway with flexible or liquidtight conduit from surface mounted outlet box on wall.

F. Where raceway is mounted on furniture, use cover plate on outlet box with conduit connector in face and extend flexible or liquidtight conduit to raceway.

G. Install raceway systems complete, including insulating bushings and inserts where required by manufacturer's installation sheets.
   1. Unused raceway openings shall be closed.

H. Install wiring devices in raceway of type, quantity and location indicated on drawings.

I. Observe following guidelines for conductor fill in raceways and wireways:
   1. Install no more than 30 current carrying conductors.
   2. Cross-sectional area of conductors shall not exceed 20 percent of raceway or wireway.

J. Install wireways with manufacturer's name or trademark visible after installation.

K. Mount wireway with section in accessible location.

L. Close ends of wireway and any unused conduit openings.

M. Use 12 IN section of wireway to pass through walls, to allow accessibility on each side.
   1. Install special escutcheon plate on each side of wall to finish opening neatly.

PART 4 - MEASUREMENT AND PAYMENT

A. Refer to Section 01 22 00, Part 4, regarding measure and payment.

B. Work of this Section is considered incidental to work under other payment items and no separate measurement and payment will be made to the Contractor for Work of this Section. Work of this section shall include furnishing all labor, materials, tools, equipment, supplies, supervision, and incidentals necessary as described by the Contract Documents.

END OF SECTION

This page intentionally left blank.

SECTION 26 08 16
COMMISSIONING OF ELECTRICAL SYSTEMS SUPPORT

PART 1 - GENERAL

1.1 SCOPE OF THE WORK

A. Responsibilities and participation in the commissioning process shall comply with the requirements of specification Section 01 91 13 – GENERAL COMMISSIONING REQUIREMENTS.

B. Each Subcontractor shall designate one person to represent their company as the Commissioning Coordinator. Each Commissioning Coordinator shall participate as a member of the Commissioning Authority's (CxA) 'Commissioning Team'. Each Subcontractor shall also designate a backup person to represent their company and fill the role as Commissioning Coordinator, including participation on the CxA Commissioning Team, in the event that the designated Commissioning Coordinator is absent. See Section 01 91 13 for Commissioning Coordinator responsibilities.

C. Work of Division 26 contractors includes the following:
   1. Attend commissioning scoping meetings. Equipment vendor representatives shall also attend upon request of the Commissioning Authority. These meetings shall further define the testing requirements and participation of each contractor and sub-contractors for each commissioning activity.
   2. Attend other meetings as required to facilitate the commissioning process. This shall include bi-monthly meetings during the startup period and weekly meetings starting at the beginning of the Owner-witnessed point to point and Functional Testing period. Other meetings may be required as problems arise, apart from the regularly-scheduled commissioning meetings.
   3. Provide Commissioning Authority additional requested data, prior to normal O&M Manual submittal, in a timely manner for the development of the pre-functional and functional performance testing procedures.
   4. The Contractor shall be responsible for working with the Mechanical Contractor in development of a comprehensive equipment startup plan.
   5. The Commissioning Authority shall prepare the Pre-Functional Checklists (PFC) checklists. The PFCs shall be completed by the contractor.
   6. The Commissioning Authority will prepare the Functional Performance Tests (FPT). The FPTs shall be completed by the contractor in the presence of the Commissioning Authority.
   7. Provide skilled technicians, including equipment vendor representatives, equipment, and materials to perform startup and execute functional performance tests.
   8. Correct deficiencies found during startup and functional performance testing in a timely manner to facilitate retesting activities within the commissioning schedule.
   9. Maintain and update as-built drawings during construction including controls as-built drawings.
   10. Provide final O&M manuals that incorporate all system changes including controls sequence of operations.

1.2 RELATED WORK

A. Division 01 Section 01 91 13 General Commissioning Requirements.

PART 2 - PRODUCTS

2.1 RELATED WORK

A. Proprietary test equipment required by the electrical equipment manufacturer, whether specified or not, shall be provided by the manufacturer of the equipment. Manufacturer shall demonstrate its use and assist the Contractor in the commissioning process.

PART 3 - EXECUTION

3.1 WORK PRIOR TO COMMISSIONING

A. Complete all phases of work so each system can be started, tested, and otherwise commissioned. Division 26 contractors have primary start-up responsibilities with obligations to complete systems, including all sub-systems, so they are fully functional. This includes the complete installation of all equipment, materials, conduit, wire, insulation, controls, etc., per the contract documents and related directives, clarifications, change orders, etc.

B. A commissioning plan will be developed by the Commissioning Authority and approved by the Owner's Representative.
   1. Division 26 contractors shall be obligated to assist the Commissioning Authority in preparing the commissioning plan by providing all necessary information pertaining to the actual equipment and installation, identification of parties responsible for startup activities, and schedule dates for equipment startup activities.
   2. If system modifications/clarifications are called for in the contractual requirements of this and related sections of work, they will be made at no additional cost to the Owner.
   3. If Contractor-initiated system changes have been made that alter the commissioning process, the Contractor will notify the Owner's Representative for approval.

3.2 PARTICIPATION IN COMMISSIONING

A. Provide skilled technicians to start up all systems within Division 26.
   1. These same technicians shall be made available to assist the Contractor and Commissioning Authority in completing the commissioning program as it relates to each system and their technical specialty.
   2. Work schedules, time required for testing, etc., will be requested and coordinated by the Contractor.
   3. Division 26 contractors shall ensure that qualified technician(s) are available and present during the agreed-upon schedules and for sufficient duration to complete the necessary tests, adjustment, and problem resolutions.

B. System problems and discrepancies may require additional technician time which shall be made available for the subsequent commissioning periods until required system performance is obtained.

C. The Owner's designated Commissioning Authority reserves the right to judge the appropriateness and qualifications of the technicians relative to each item of equipment or system. Such qualifications include expert knowledge relative to the specific equipment involved, adequate documentation and tools to service/commission the equipment, and an attitude/willingness to work with the Contractor to get the job done.

3.3 WORK TO RESOLVE DEFICIENCIES

A. In some systems, improper adjustments, misapplied equipment and/or deficient performance under varying loads will result in additional work being required to commission the systems. This work will be completed under the direction of the Owner's Representative and the Architect, with input from the Contractor and equipment supplier. Whereas all members will have input and the opportunity to discuss the work and resolve problems, the Architect will have final jurisdiction on the work needed to achieve performance.

B. Corrective work shall be completed in a timely fashion to permit timely completion of the commissioning process. The GC or relevant Subcontractor shall provide a manufacturer's representative at no additional cost to the Owner.

C. Experimentation to render system performance will be permitted.
   1. If the GC deems the experimentation work to be ineffective or untimely as it relates to the commissioning process, the GC will notify the Owner indicating the nature of the problem, expected steps to be taken, and the deadline for completion of activities.
   2. If deadlines pass without resolution of the problem, the Owner reserves the right to obtain supplementary services and/or equipment to resolve the problem.
   3. Costs incurred to solve the problem in an expeditious manner will be the Contractor's responsibility.

3.4 SEASONAL COMMISSIONING AND OCCUPANCY VARIATIONS

A. Seasonal commissioning pertains to testing under full-load conditions during peak heating and peak cooling seasons, as well as part-load conditions in the spring and fall.
   1. Initial commissioning will be done as soon as contract work is completed regardless of season.
   2. Commissioning under conditions representing other than the current season may be undertaken at a later time by the Commissioning Authority.
   3. Discrepancies discovered with the Contractor's equipment or workmanship will be handled as warranty items.

3.5 RETESTING AND RECOMMISSIONING

A. Any fault in material or in any part of the installation revealed by commissioning tests shall be investigated, replaced, or repaired by the Contractor, and the same test repeated at the Contractor's expense until no fault appears.

3.6 MISCELLANEOUS SUPPORT

A. Division 26 contractors shall remove and replace covers of mechanical equipment, open access panels, etc., to permit Contractor, Architect and Owner's Representative to observe equipment and controllers provided. Furnish ladders and flashlights as necessary.

END OF SECTION

This page intentionally left blank.

SECTION 26 27 26
WIRING DEVICES

PART 1 - GENERAL

1.1 SUMMARY

A. Furnish all labor, materials, tools, equipment, and services for Wiring Devices, as indicated, in accordance with provisions of Contract Documents.

B. Completely coordinate with work of other trades.

1.2 QUALITY ASSURANCE

A. Provide wiring devices conforming to the following standards:
   1. Underwriter's Laboratories (UL).
      a. UL 20 – Standard for Safety for General-Use Snap Switches.
      b. UL 498 – Standard for Attachment Plugs and Receptacles.
      c. UL 514D – Cover Plates for Flush-Mounted Wiring Devices.
      d. UL 943 – Standard for Safety for Ground-Fault Circuit-Interrupters.
   2. National Electric Manufacturers Association (NEMA).
      a. WD-1 – General Color Requirements for Wiring Devices.
      b. WD-6 – Wiring Devices – Dimensional Requirements.
   3. US Federal Specifications.
      a. Fed Spec switches (WS-896E).
      b. Fed Spec receptacles (WC-596F).
      c. Fed Spec device plates (W-P-455).

1.3 SUBMITTALS

A. Product Data:
   1. Technical data on each type of device.

PART 2 - PRODUCTS

2.1 ACCEPTABLE MANUFACTURERS

A. Wiring devices:
   1. Base:
      a. Hubbell.
   2. Optional:
      a. Cooper.
      b. Leviton Manufacturing.
      c. Pass & Seymour.
   3. All wiring devices shall be provided by the same manufacturer.

B. Explosion proof switches:
   1. Base:
      a. Crouse-Hinds Lighting.

C. Dimmers:
   1. Base:
      a. Lutron.
   2. Optional:

a. Prescolite.
b. Leviton Manufacturing.

D. Plug-in strip:
1. Base:
a. Wiremold.

E. Other manufacturers desiring approval comply with Section 00 26 00.

2.2 MATERIALS

A. DUPLEX AND SINGLE RECEPTACLES
1. Receptacle outlets:
a. Specification grade.
b. Specification grade receptacles shall be listed per UL 498 for general use and certified by UL to Fed Spec WC-596F, and shall be visibly marked with the "UL-FS" mark to confirm certification.
1) Constructed with impact resistant nylon or polyester face and body.
2) 0.050 IN brass nickel-plated back strap with one piece (non-riveted) ground design.
3) 0.040 IN brass nickel-plated contacts.
c. Flush, grounding convenience outlets for side wiring, or side and back wiring.
d. Use ivory devices for "normal" circuits.
e. Use red devices on "emergency" and "critical" circuits.
f. Refer to symbol legend.
2. 20A, 125V, hospital grade, 2 pole, 3-wire grounding, duplex: NEMA 5-20R; Hubbell HBL8300.
3. 20A, 125V, hospital grade, 2 pole, 3-wire grounding, single: NEMA 5-20R; Hubbell HBL8310.
4. 20A, 125V, hospital use only, 2 pole, 3-wire grounding, single, non-explosion proof: Black, isolated power type; Hubbell HBL23000 HG.
5. 20A, 125V, hospital use only, 2 pole, 3-wire grounding, single, explosion proof: Cast iron box, isolated power type; Class I, Division 1, Group C for hazardous anesthetizing locations; Hubbell HBL24301.
6. 20A, 125V, 2 pole, 3-wire grounding, duplex: NEMA 5-20R; Hubbell HBL5362.
7. 20A, 125V, 2 pole, 3-wire grounding, single; NEMA 5-20R; Hubbell HBL5361.
8. Clock hanger receptacle not on synchronous clock system: 15A, 125V, 3-wire grounding, single, with recess for plug cap stainless steel plate with hook; Hubbell HBL5235.
9. Weatherproof receptacles: Type as indicated on drawings.
a. Mount on "FS" cast metal box.
b. Suitable for wet location when receptacle is not in use.
1) Gasketed and self-closing lift cover.
a) Single outlets: Hubbell HBL7423 WO.
b) Duplex outlets: Hubbell HBL5206 WO.
c) Duplex GFI receptacles: Hubbell WPFS26.
10. 20A, 125V, hospital grade, 2 pole, 3-wire, grounding, duplex, safety type: NEMA 5-20R; Hubbell HBLSLG-63H.
11. GFI type duplex receptacles: With built-in ground fault interruption, 5-mA sensitivity, indicator and reset. UL listed.
a. 15A, 125V, 3-wire duplex: NEMA 5-15R; Hubbell GF5262.
b. 20A, 125V, 3-wire duplex: NEMA 5-20R; Hubbell GF5362.
12. Pedestal-type floor-mounted duplex receptacles: 20A, 125V, 3 wire, grounding, back and side wired, NEMA 5-20R.
a. Horizontal design housing with threaded conduit fittings in base, with satin chromium finish.
b. Dual level 4 IN round fully adjustable cast iron box.
1) Floors over 3 IN deep: Hubbell B-2536.

2) Floors 3 IN deep or less: Hubbell B-2537.
c. Round brass fitting cover, combination: Hubbell S-2525.
d. Pedestal service fitting: Hubbell SC3098/SS309B/ SS309D/5362.
13. Counter-top duplex receptacles: Similar to floor-mounted pedestal type.
14. Flush in-floor receptacles: 20A, 125V, 3 wire, grounding, back, and side wired NEMA 5-20R.
a. Dual level 4 IN round fully adjustable cast iron box.
1) Floors over 3 IN deep: Hubbell B-2536.
2) Floors 3 IN deep or less: Hubbell B-2537.
b. Round brass fitting cover, duplex screw: Hubbell S-3725.
c. Round brass carpet flange: Hubbell S-3182. Provide as required.
15. Receptacle with integral surge protection: Device type as indicated with integral surge protection rated at 140 joules, minimum, in any mode.
a. Power on indicator light.
b. Beeper to sound when protection is no longer functioning.
c. Comply with UL-1449 and ANSI/IEEE-62.41.
d. Blue device with blue device plate.
e. Specification grade, Hubbell HBL5262S and HBL5362S.
16. Isolated ground receptacles: Device type as indicated with receptacle ground isolated from conduit grounding system.
a. Orange device with orange device plate.
b. Specification grade, Hubbell IG-5262 and IG-5362.

B. DEVICE PLATES
1. Device plates for concealed wiring: Same manufacturer as devices to suit device covered; single, or ganged, in one piece with beveled edges that match faces of plates.
a. Flush, brushed-finish, type 304 stainless steel.
b. Narrow plates for hollow metal jamb posts: Arrow-Hart No.T-1650, stainless steel.
2. Labeling:
a. General:
1) Where labeling of device plates is required provide engraved laminated nameplate or engraved device plate.
b. At critical patient care areas label all critical receptacle plates to indicate panelboard and circuit number supplying them.
3. Device plates for surface type cast-metal boxes: Corrosion resistant cast ferrous metal designed for application.

PART 3 - EXECUTION

3.1 INSTALLATION

A. Locate devices as indicated and as scheduled in Section 26 00 10.

B. Center outlets with regard to paneling, furring, trim, etc.

C. Where several outlets occur in a room, symmetrically arrange them.

D. Any outlet which is improperly located must be corrected at Contractor's expense.

E. Set outlets plumb or horizontal and extending to finished surface of wall, ceiling or floor as case may be without projecting beyond same.

F. Install receptacles, switches, etc., indicated on wood trim, cases or other fixtures symmetrically. Where necessary, set with long dimension of plate horizontal, or gang in tandem.

END OF SECTION

This page intentionally left blank.

SECTION 26 32 14
ENGINE GENERATOR: DIESEL

PART 1 - GENERAL

1.1 SUMMARY

A. Section Includes:
   1. Engine generator set and accessories.

B. Related Specification Sections include but are not necessarily limited to:
   1. Division 00 - Bidding Requirements, Contract Forms, and Conditions of the Contract.
   2. Division 01 - General Requirements.
   3. Section 26 05 00 - Electrical: Basic Requirements.
   4. Section 26 05 48 - Seismic Bracing Systems.

1.2 QUALITY ASSURANCE

A. Referenced Standards:
   1. Environmental Protection Agency (EPA):
      a. 40 CFR Part 60, Subpart IIII, Protection of Environment, Standards of Performance for New Stationary Sources, Standards for Performance for Stationary Compression Ignition Internal Combustion Engines.
   2. National Electrical Manufacturers Association (NEMA):
      a. 250, Enclosures for Electrical Equipment (1000 Volts Maximum).
      b. MG 1, Motors and Generators.
   3. National Fire Protection association (NFPA):
      a. 70, National Electrical Code (NEC):
         1) Article 700, Emergency Systems.
         2) Article 701, Legally Required Standby Systems.
         3) Article 702, Optional Standby Systems.
   4. Underwriters Laboratories, Inc. (UL):
      a. 2200, Standard for Stationary Engine Generator Assemblies.

B. The engine generator set manufacturer or authorized supplier is designated to have single source responsibility for the supply of all components and installation of the unit.

C. Comply with U.S. Department of Transportation Buy America provision – Federal Transit Administration 49 U.S.C. § 5323(j); 49 C.F.R. Part 661.

1.3 SYSTEM DESCRIPTION

A. The engine generators will be used and rated for:
   1. Emergency power during a power outage, NFPA 70, Article 700.
   2. Legally required standby power during a utility power outage, NFPA 70, Article 701.
   3. Optional standby power during a utility power outage, NFPA 70, Article 702.

1.4 SUBMITTALS

A. Shop Drawings:
   1. See Specification Section 01 33 00 for requirements for the mechanics and administration of the submittal process.
   2. Product technical data:
      a. Provide submittal data for all products specified in PART 2 of this Specification Section.
      b. See Specification Section 26 05 00 for additional requirements.
      c. Engine/generator performance curves.

3. Fabrication and/or layout drawings.
    a. Dimensional plan and elevation drawings.
    b. Wire interconnection drawings.
4. Test reports:
    a. Factory test reports.

B. Operation and Maintenance Manuals:
1. See Specification Section 01 33 04 for requirements for:
    a. The mechanics and administration of the submittal process.
    b. The content of Operation and Maintenance Manuals.

C. Informational Submittals:
1. Unit installation, startup and operational statement.
2. Field Quality Control test reports.

1.5 SITE CONDITIONS

A. Ambient air temperature:
1. Minimum: 20 DegF.
2. Maximum: 120 DegF.

B. Altitude: 1050 FT above sea level.

C. Seismic (Earthquake) forces:
1. See Specification Section 26 05 48.

1.6 WARRANTY

A. Provide a five (5) year warranty and a one (1) year maintenance agreement for the standby generator.

PART 2 - PRODUCTS

2.1 ACCEPTABLE MANUFACTURERS

A. Subject to compliance with the Contract Documents, the following manufacturers are acceptable:
1. Engine generator unit:
    a. Caterpillar.
    b. Cummins Onan.
    c. Kohler.
2. Silencers:
    a. Maxim.
    b. GT Exhaust Systems.
    c. Nelson.
    d. Cowl.
    e. Hapco.
3. Battery charger:
    a. Manufacturer's standard.
4. Governor:
    a. Manufacturer's standard.
5. Radiator:
    a. Manufacturer's standard.
6. Vibration isolators:
    a. Caldyne.
    b. Mason Inds.
    c. Ace.
    d. Korfund Dynamics.

7. Sub-base fuel tank:
    a. Pryco.
    b. Simplex Access Controls.
    c. Tramont.

B. Submit request for substitution in accordance with Specification Section 01 25 13.

2.2 EQUIPMENT

A. Emissions Requirements:
1. A single units emissions shall meet all Federal, State and Local government requirements, including but not limited too:
    a. Environmental Protection Agencies (EPA) New Source Performance Standards (NSPS), 40 CFR Part 60, Subpart IIII.

2.3 COMPONENTS

A. Engine Generator Unit General:
1. Diesel engine direct-connected to alternating current generator mounted on suitable rigid steel skid supports.
2. Mount unit on skid suitable for installation on concrete foundation.
3. Base rating on operation at rated RPM when equipped with all operating accessories.
4. Standards: UL 2200.

B. Engine:
1. Four-cycle, full compression ignition, single acting, solid-injection unit, either vertical or V-type pistons turbo charged with after cooling.
2. Fuel supply: No. 2 Diesel.
3. Removable full wet-type cylinder liners of close grained alloy iron, heat treated for proper hardness to obtain maximum life.
4. Capable of operating at idle or light loads for extended periods of time.

C. Injection Pumps and Valves:
1. Type not requiring adjustment in service, which may be individually removed and replaced.
2. Individual injection pump and valve for each cylinder.
3. Fuel injection pumps: Positive action, constant-stroke, actuated by cam driven by gears from engine crankshaft.
4. Fuel lines between injection pumps and valves: Heavy seamless steel tubing.
5. Flexible fuel line connectors for supply and return connections at pump.

D. Oil Pump:
1. Gear-type lubricating oil pump to supply oil under pressure to main bearings, crank pin bearings, pistons, timing gears, camshaft bearings and valve rocker mechanism.
2. Spray cool and lubricate pistons.
3. Oil filters so located that lubricating oil is continuously filtered, except during periods when oil is automatically by-passed to protect vital parts when filters are clogged.
4. Filter elements accessible and easily removable.
5. Filter elements: Effective full flow, replaceable resin-impregnated cellulose type.
6. Equip filter system with spring-loaded by-pass valve.
7. Oil cooler: Water-cooled, engine-mounted.

E. Fuel System:
1. Fuel pump: Built-in gear-type, engine-driven fuel transfer pump, capable of supplying fuel at constant pressure against head of 12 FT.
2. Equip fuel system with replaceable fuel filter elements arranged for easy removal without breaking any fuel line connections or disturbing fuel pumps or any other part of engine.
3. Locate all fuel filters in an accessible housing, ahead of injection pumps to thoroughly filter fuel before it reaches the pump.

4. Use no screens or filters requiring cleaning or replacement of injection pumps or valve assemblies.

F. Governor: Fully enclosed electronic type governor with actuator capable of providing accurate speed control within 1 percent of rated speed, complete with panel-mounted electronic assembly with ramp generator and speed-sensing modules.

G. Air Cleaners: Engine-mounted, dry type air cleaners of sufficient capacity.

H. Electric Starting System:
1. Sufficient capacity to crank at speed which will start engine under normal operating conditions.
2. Controls to provide automatic cranking of engine when generator is called to start.
3. Prevent excessive cranking which could damage cranking motor.
4. Automatic stop controls.
5. Starter motors with positive-engagement feature.

I. Cooling System:
1. Capacity for cooling engine at the specified operating conditions.
2. Engine driven, centrifugal type water circulating pump and thermostatic valve to maintain the engine at recommended temperature level.
3. Unit mounted radiator.
   a. Core guard flexible duct adapter.
   b. Site glass at top of unit.
   c. Engine driven blower fan.
   d. Low water level cutoff switch.
4. Provide fan guards.

J. Heater:
1. Thermostatically controlled jacket water heater(s) to maintain cooling jacket at the manufacturer's recommended temperature at the specified low ambient temperature.
2. 208 V, single phase.

K. Silencer:
1. Suitable type for critical silencing.
2. Seamless, stainless steel, flexible, exhaust adapter for exhaust outlet to silencer.

L. Engine Instruments and Controls:
1. Engine-mounted instruments:
   a. Oil pressure gage.
   b. Water temperature gage.
   c. Run time meter.
   d. Battery voltage meter.
2. Automatic cycle cranking and over-crank protection.
3. Safety controls: Equip engine with automatic safety controls to shut down engine in event of low lubricating oil pressure, high jacket water temperature, overspeed or overcrank.
4. Auxiliary control devices: Either integral with specified engine instruments, control, and safety devices or as separate devices as required to operate various signal circuits specified for remote annunciator panel.
5. Three (3) NO auxiliary contacts for interface with louvers, fans or other miscellaneous equipment.
   a. Contacts shall close when generator is started.

M. Fuel Tank:
1. Double wall sub-base tank mounted underneath engine generator unit.
2. Steel construction, top and bottom baffles, steel channel side supports, weatherproof secondary containment, rust preventive interior coating, rust proofed and finish painted exterior.

3. Tank connections: Fuel level gauge, fuel lines to generator, fill, vent, drain and pressure relief.
4. Manual overfill protection.
5. Low level warning with contacts for remote alarm.
   a. Set to alarm at 50 percent of capacity.
6. Critical low level shutoff with contacts for remote alarm.
7. Leak detection alarm with contacts for remote alarm.
8. Capacity: 48 HRS at full load 1470 GAL.

N. Batteries:
1. Lead acid type.
2. Furnish electrolyte separately for use when installation is complete and unit is ready for testing.

O. Battery Charger:
1. Output current rating of at least 1/20th of ampere hour capacity of battery and capable of automatically switching between low rate (float) mode and high rate (equalize) mode.
2. Solid state rectifiers, DC voltmeter and ammeter, fuse input and output, and 115 Vac input.
3. Malfunction alarm contacts (minimum): low and high battery voltage, weak battery and charger failure.

P. Generator:
1. Brushless, 6-pole drip-proof revolving field type with permanent magnet, 2/3 pitch stator, direct-coupled rotor, Class H insulation.
2. Minimum continuous standby ratings:
   a. As indicated on the Drawings substantiated by manufacturer's standard published curves and conform to NEMA MG 1 specification.
   b. Special ratings or maximum ratings are not acceptable.
3. Rated to serve up to 50 percent non-linear load without exceeding rated temperature rise.
4. Minimum efficiency: 92 percent at 50 to 110 percent of nominal standby rating, less than 30 percent instantaneous voltage dip at full load and rated power factor and suitable for simultaneous operation with other future units connected in parallel.
5. Stator and rotor: 125 DegC temperature rise with minimum Class F insulated with 100 percent epoxy impregnation and overcoat of resilient insulating material to reduce possible fungus and/or abrasive deterioration.
6. Directly connect stator to engine flywheel housing.
7. Drive rotor through semiflexible driving flange to ensure permanent alignment.
8. Self ventilating with suitable blower, air inlet and outlet openings.
9. Provide terminal box of adequate size for entrance of conduit and termination of conductors.
10. Generator drive free from critical torsional vibration within operating range.
11. Provide generator mounted main circuit breaker:
    a. Solid state molded case type.
    b. Ratings as indicated.

Q. Voltage Regulator:
1. SCR type, to maintain 2 percent voltage regulation from 0 to full load with steady state modulation not exceeding plus 1/2 percent including cross-current compensation to provide maximum of 5 percent unbalance in kVA load sharing between this unit and possible future generators.
2. Automatic protection against short circuits on system.
3. Permit unit to operate at no load below rated frequency for engine start up and shut down procedures.
4. Provide voltage level and gain controls for normal operating adjustments.
5. Provide voltage level control with minimum range of plus or minus 5 percent from rated voltage.
6. Mount regulator, volts per hertz type, in generator housing on suitable vibration isolators.

R. Generator Instruments and Controls:
   1. Generator mounted NEMA 1 type, illuminated vibration isolated instrument and control panel(s).
   2. AC voltmeter and phase selector switch.
   3. AC ammeter and phase selector switch.
   4. Frequency meter.
   5. Run-off-auto engine, start-stop control switch.
   6. Emergency stop.
   7. Run time meter.
   8. Governor control rheostat.
   9. Voltage level adjustment rheostat.
   10. Cool down time delay 0-15 minute adjustable.
   11. Cycle cranking control.
   12. Minimum red shut down indicating lights as follows:
      a. Overcrank.
      b. Overspeed.
      c. Low lubricating oil pressure.
      d. High engine water temperature.
   13. Minimum amber alarm indicator lights as follows:
      a. Control switch not in auto position.
      b. Low engine water temperature (less than 70 DegF).
      c. Low fuel in sub-base tank.
      d. Sub-base tank leak.
      e. Battery charger malfunctioning.
      f. Low battery voltage.
   14. Minimum amber prealarm indicator lights as follows:
      a. High engine water temperature.
      b. Low lubricating oil pressure.
   15. Common dry contact and audible alarm to indicate when one (1) or more alarm or prealarm conditions exist.

S. Vibration Isolators: Vibration system shall consist of engine and generator mount isolators with or without additional mechanical spring isolators rubber pads to control both high and low frequency vibrations between major components, sub-base and structural foundation and to provide required vibration isolation for the seismic zone of the Project.

2.4 ACCESSORIES

A. Provide interposing relays (24 Vdc to 120 Vac) as required for interfacing with customer's 120 Vac monitoring system.

B. Generator remote annunciator panel:
   1. Comply with NFPA 110. An LED labeled with proper alarm conditions shall identify each alarm event and a common audible signal shall sound for each alarm condition.
   2. Surface mounted NEMA 1 enclosure.
   3. Circuits:
      a. 24 Vdc powered from starting batteries.
      b. Verify circuit voltage to match battery voltage.
   4. Provide red and green signal lamps, buzzer, silencing switch, lamp test switch, relays, solid-state components, and engraved function identifications.
   5. Annunciator functions:
      a. Green light "ON" to indicate generator is operating to supply power to load.
      b. Separate red light for each shutdown or alarm condition and amber light for each prealarm condition and common buzzer with silence/ acknowledge switch.
      c. Shut down indicating lights as follows:
         1) Overcrank.

2) Overspeed.
3) Low lubricating oil pressure.
4) High engine water temperature.

d. Alarm indicator lights as follows:
1) Control switch not in auto position.
2) Low engine water temperature (less than 70 DegF).
3) Low fuel in sub-base tank.
4) Fuel in sub-base tank rupture basin.
5) Battery charger malfunctioning.
6) Low battery voltage.

e. Prealarm indicator lights as follows:
1) High engine water temperature.
2) Low lubricating oil pressure.

2.5 SOURCE QUALITY CONTROL

A. Individually test each prime mover.
1. Apply derating factors for the proposed site to test data.
2. Continuously test for a period no less than 2 HRS.
3. Test procedure shall be as follows:
a. Start prime mover and upon reaching rated RPM, pick up 100 percent of nameplate KW rating at rated power factor in one (1) step.
b. Observe and record the cranking time(s) required to start and run for each prime mover.
c. Observe and record the time required to come up to operating speed for each prime mover.
d. Record voltage and frequency overshoot for each prime mover.
e. Record voltage, frequency and amperes.
f. Record oil pressure, water temperature where applicable and battery charge rate at first load acceptance and at 15 minute intervals thereafter for each prime mover.

2.6 MAINTENANCE MATERIALS

A. Spare Parts:
1. Provide manufacturer's recommended spare parts.

PART 3 - EXECUTION

3.1 INSTALLATION

A. Install all components as indicated and in accordance with manufacturer's recommendations and instructions and Specification Section 26 05 48.

B. Fill cooling system with solution of 50-50 water and ethylene glycol anti-freeze to prevent freezing at temperatures as low as minus 30 DegF.

C. Provide fuel for a full sub-base tank.

D. Install all wiring to engine in conduit.
1. Control wiring on engine may be factory installed in high temperature loom.

E. Provide control wiring in conduit between generator control panel , remote annunciator panel, and remote devices as described under generator instrument and controls paragraph and remote annunciator paragraph of this Specification.

F. Mount on concrete pad utilizing vibration/seismic isolators, see structural drawings for pad detail.

3.2 FIELD QUALITY CONTROL

A. Employ and pay for services of equipment manufacturer's field service representative(s) to:
   1. Inspect equipment covered by this Specification Section.
   2. Supervise pre-startup adjustments and installation checks.
   3. Conduct initial startup of equipment and perform operational checks.
   4. Provide Owner written statement that manufacturer's equipment has been installed properly, started up, tested, and is ready for operation by Owner's personnel.
   5. Provide 4 HRS of the manufacturer's technical representative's time for on-site training of Owner's personnel.

B. Provide two (2) load tests and one (1) cycle crank test.
   1. Tests one (1) and two (2) shall be for continuous period of no less than 2 HRS each.
   2. Engineer and Owner shall be notified seven (7) days prior to testing.
   3. Test number one:
      a. With prime mover(s) in a "cold start" condition and emergency load at normal operating level, initiate a normal power failure by opening all switches or breakers supplying normal power to facility.
      b. Observe and record the time delay on engine start.
      c. Observe and record the cranking time(s) required to start and run for each prime mover.
      d. Observe and record the time required to come up to operating speed for each prime mover.
      e. Record voltage and frequency overshoot for each prime mover.
      f. Observe and record time required to achieve steady-state condition with all switches transferred to emergency position.
      g. Record voltage, frequency and amperes.
      h. Record oil pressure, water temperature where applicable and battery charge rate at 5-minute intervals for the first 15 minutes and at 15 minute intervals thereafter for each prime mover.
      i. Return normal power to facility, record time delay on retransfer to normal for each switch and cooldown time delay for each prime mover.
   4. Test number two:
      a. Immediately after completion of test number one, start prime mover and upon reaching rated RPM, pick up 100 percent of nameplate KW rating in one (1) step.
         1) Unity power factor is acceptable for on-site testing
      b. Observe and record the cranking time(s) required to start and run for each prime mover.
      c. Observe and record the time required to come up to operating speed for each prime mover.
      d. Record voltage and frequency overshoot for each prime mover.
      e. Observe and record time required to achieve steady-state condition.
      f. Record voltage, frequency and amperes.
      g. Record oil pressure, water temperature where applicable and battery charge rate at first load acceptance and at 15 minute intervals thereafter for each prime mover.
   5. Cycle crank test:
      a. Perform test for each prime mover.
         1) Utilize any method recommended by manufacturer to prevent prime mover(s) from running.
         2) Put control switch into "run" position to cause prime mover to crank.
      b. A complete cranking cycle shall consist of an automatic crank period of approximately 15 seconds duration followed by a rest period of approximately 15 seconds duration.
         1) Upon starting and running of the prime mover, further cranking shall cease.
         2) Two (2) means of cranking termination shall be utilized so that one (1) will act as a backup to the other to prevent inadvertent starter engagement.
         3) Cranking limiter time shall be 75 seconds for cycle crank.
   6. Furnish load banks of required ratings necessary for tests.

7. Record engine fuel consumption by means of test equipment.
8. Test all safeties specified for generator instruments and controls and generator remote annunciator panel as recommended by manufacturer and as required to verify proper operation.
9. Contractor shall be responsible for fuel and all consumables use during the test.

END OF SECTION

SECTION 26 36 00
TRANSFER SWITCHES

PART 1 - GENERAL

1.1 SUMMARY

A. Section Includes:
   1. Automatic transfer switches.

B. Related Sections include but are not necessarily limited to:
   1. Division 00 - Bidding Requirements, Contract Forms, and Conditions of the Contract.
   2. Division 01 - General Requirements.
   3. Section 26 05 00 - Electrical: Basic Requirements.

1.2 QUALITY ASSURANCE

A. Referenced Standards:
   1. National Electrical Manufacturers Association (NEMA):
      a. 250, Enclosures for Electrical Equipment (1000 Volts Maximum).
      b. KS 1, Enclosed and Miscellaneous Distribution Equipment Switches (600 Volts Maximum).
   2. Underwriters Laboratories, Inc. (UL):
      a. 98, Standard for Safety Enclosed and Dead-Front Switches.
      b. 1008, Standard for Safety Switch Equipment.

B. Comply with U.S. Department of Transportation Buy America provision – Federal Transit Administration 49 U.S.C. § 5323(j); 49 C.F.R. Part 661.

1.3 SUBMITTALS

A. Shop Drawings:
   1. See Specification Section 01 33 00 for requirements for the mechanics and administration of the submittal process.
   2. Product technical data:
      a. Provide submittal data for all products specified in PART 2 of this Specification:
      b. See Section 26 05 00 for additional requirements.

B. Operation and Maintenance Manuals:
   1. See Specification Section 01 33 04 for requirements for:
      a. The mechanics and administration of the submittal process.
      b. The content of Operation and Maintenance Manuals.

1.4 DELIVERY, STORAGE, AND HANDLING

A. See Section 26 05 00.

1.5 WARRANTY

A. Provide a five (5) year warranty and a one (1) year maintenance agreement for the ATS.

PART 2 - PRODUCTS

2.1 ACCEPTABLE MANUFACTURERS

A. Subject to compliance with the Contract Documents, the listed manufacturers are acceptable:
   1. Automatic transfer switches:

a. Eaton.
b. Caterpillar.
c. Kohler.
d. Automatic Switch Company.
e. Onan.
f. Russelectric.
g. Zenith Products.

B. Submit request for substitution in accordance with Specification Section 01 25 13.

2.2 MANUAL TRANSFER SWITCH (NOT USED)

2.3 AUTOMATIC TRANSFER SWITCH

A. Construction:
1. Electrically operated mechanically held, double throw, air-break type.
2. Silver-surface main contacts and protect by arcing contacts.
3. Switch shall have provisions for visual inspection of switch blades and contacts.
4. Mechanical design will positively open all ungrounded conductors from normal source before connection is made to alternate source and will positively open alternate source before connection is made to normal source.
5. Mechanical interlock to ensure the switch cannot be readily disabled, disconnected, improperly adjusted, removed or otherwise made inoperative.
6. Make all contacts and coils readily accessible for replacement from front of panel without major disassembly.
7. Ratings:
   a. Continuous duty in both normal and emergency.
   b. Three-phase, three-pole, four-wire.
   c. Voltage and current ratings as indicated on the Drawings.
   d. Short circuit withstand rating equal to or greater than the normal source electrical gear.
8. Standards: UL 1008.

B. Bypass Isolation Dual Drawout Transfer Switch
1. The ATS shall be provided with a bypass isolation switch to permit isolation of the ATS from source and load conductors. The bypass isolation transfer switch assembly shall be configured of two automatic contactor switching devices factory interconnected with silver plated copper bus. The bypass contactor switch shall be constructed to carry full load with the same withstand and close-on ratings as the ATS.
2. The controller shall be active in both the ATS and bypass mode of operation. In the event of a power failure while operating on bypass, the controller shall initiate an automatic transfer to the alternate source.
3. The primary contactor switching device and the bypass contactor switching device shall both be draw-out configuration and supplied in a front access structure. Bus links shall be provided to allow for field configurable connections of top or bottom entry or a combination of both. Standard shall be with source one and load connections on top and source two connections on the bottom .
4. All control wiring shall be contained in a low-voltage compartment separated from the line voltage. All control wiring shall be harnessed with keyed disconnect plugs for ease of maintenance. Customer connections shall be wired out to a single terminal block mounted inside the low voltage compartment.
5. The primary and the bypass switch shall be contained in separate compartments located behind separate doors with padlockable handles.
6. The transfer to bypass shall be accomplished by operation of a single selector switch. The selector switch shall have an "Auto" and "Bypass" position. Transfer to bypass shall not interrupt power to the load.

7. The bypass isolation transfer switch shall be electrically interlocked to prevent cross connection of sources when operated either automatically via controller or manually via control switch.
8. The bypass isolation transfer switch shall have three positions: "Connected", "Isolated", and "Removed". In the "Connected" position, ATS is racked-in and is being actively controlled by the controller. In the "Isolated" position, the ATS is connected to control power only and may be electrically operated for test purposes. In the "Removed" position the ATS has been disconnected from the main bus and control power and the transfer switch may be safely removed for inspection or replacement.
9. The ATS shall be capable of being racked-out with the enclosure door closed. An indicating light shall be mounted on the door to indicate when the ATS is isolated from the power and when the ATS is in the removed position. A key interlock shall be provided to prevent the ATS from being racked out while the transfer switch is still powering the load.
10. The Bypass Isolation transfer switch shall be interlocked to prevent connecting or disconnecting the contactor from the main bus with the contacts closed.
11. The bypass isolation transfer switch shall have a Test/Manual selector switch. The "Test" position shall be used to test the electrical operation of the primary contactor switching device while in the isolated position. The "Manual" position shall be used to disable automatic control while operating in bypass mode and to perform a non-automatic transfer.
12. A detached handle shall be provided for manual operation of the switches in racked-out and in the removed position.
13. Bypass Isolation transfer switch shall be painted ANSI 61 grey with white interior.
14. The Bypass Isolation transfer switch shall have current transformers and a three phase current transducer with a 0-5 amp input and a 4-20ma output capability mounted within the ATS enclosure.

C. Operation:
1. Microprocessor based control module.
2. Open transition.
3. Red and green indicating lights with fuses, identification nameplates, and test switch on front to simulate normal power failure at switch.
4. Engine starting contacts and all other auxiliary contacts and accessory devices for functions to be performed.
5. Supervisory voltage relays on each phase of normal source and single phase supervisory voltage and frequency relay for emergency source.
   a. Normal source voltage sensing.
      1) Adjustable pickup from 85-100 percent of rated voltage, factory set 90 percent.
      2) Adjustable dropout from 75-98 percent of pickup setting, factory set 85 percent.
   b. Emergency source voltage and frequency sensing:
      1) Adjustable pickup from 85-100 percent of rated voltage, factory set 90 percent.
      2) Fixed voltage dropout at 85 percent of pickup setting.
      3) Adjustable pickup from 90-100 percent of rated frequency, factory set 95 percent.
      4) Fixed frequency dropout at 88 percent of pickup setting.
6. Time delays:
   a. Engine start, adjustable from 0 to 10 seconds, factory set at 4 seconds, to avoid unnecessary starting caused by short time outages.
   b. Transfer to generator, adjustable from 0 to 120 seconds, factory set at 10 seconds.
   c. Retransfer to normal, adjustable from 2 to 30 minutes, factory set at 15 minutes to avoid erratic operation caused by short time reestablishment of normal source.
      1) Automatically bypassed when emergency source fails and normal source is available.
   d. Generator cool down, adjustable from 0 to 60 minutes, factory set at 10 minutes.
7. Exerciser timer:

a. Enable and disable function.
b. Selectable to exercise with or without transferring load.
c. Adjustable exercise duration from 1 minute to 24 HRS, factory set at 15 minutes.
d. Adjustable day of the week exercise setting, factory set for Monday.

D. Enclosure:
1. NEMA 3R rated.
2. Body and cover: Sheet steel finished with a rust inhibiting primer and manufacturers standard paint inside and out.
3. No knockouts, hinged and lockable door.

E. Accessories:
1. For measuring load amps, include metering on load side.
a. Eaton IQ250 meter, catalog number IQ250MA65100, or equal.

PART 3 - EXECUTION

3.1 INSTALLATION

A. Install as indicated and in accordance with manufacturer's recommendations and instructions.

B. Connect as indicated in one-line diagram.

C. Mounting of automatic transfer switches:
1. Wall-mounted or floor mounted on 4 IN high concrete pad.

3.2 FIELD QUALITY CONTROL

A. Provide the services of a qualified factory-trained manufacturer's representative to assist the contractor in installation and start-up of the equipment specified under this section. The manufacturer's representative shall provide technical direction and assistance to the contractor in general assembly of the equipment, connections and adjustments, and testing of the assembly and components contained therein.

B. Provide 4 HRS of the manufacturer's technical representative's time for on-site training of Owner's personnel. The training program shall consist of the instruction on the operation of the transfer switch and the major components within the assembly.

C. Automatic Transfer Switch Testing:
1. Simulate power outage by opening normal source overcurrent device.
a. Verify engine generator starts and switch transfers in the specified time.
2. Close normal source overcurrent device to simulate the return of normal power.
a. Verify the switch retransfers and engine generator shuts down in the specified time.
3. Perform a manual transfer and retransfer.
4. Verify the indicator lights function properly.

3.3 MANUFACTURER'S CERTIFICATION

1. A qualified factory-trained manufacturer's representative shall certify in writing that the equipment has been installed, adjusted and tested in accordance with the manufacturer's recommendations.
2. The Contractor shall provide a copy of the manufacturer's representative's certification.

END OF SECTION

SECTION 26 56 00
EXTERIOR LIGHTING

PART 1 - GENERAL

1.1 SUMMARY

A. Furnish all labor, materials, tools, equipment, and services for Exterior Lighting, as indicated, in accordance with provisions of Contract Documents.

B. Completely coordinate with work of other trades.

1.2 QUALITY ASSURANCE

A. Standards:
   1. Use luminaires conforming to UL Standards and bearing UL labels tested by a nationally recognized testing facility under UL 1598 and UL 8750.
   2. Use luminaires manufactured in accordance with NEC.
   3. Use luminaires which are California Title 24 listed.

1.3 SUBMITTALS

A. Shop Drawings:
   1. For special assemblies.

B. Product Data:
   1. Lighting:
      a. Names of manufacturers, cuts, catalog numbers and photometric performance data and isofootcandle plots where applicable of all lighting fixtures to be used on project.
      b. Identify fixtures by Fixture Schedule number, including special notations for finishes, colors, and mountings.
      c. Manufacturer's installation instructions.

C. Delivery, Storage, and Handling: Follow Section 01 77 00
   1. Maintain integrity of waterproof luminaire seals.
   2. Sealed luminaire housings shall not be opened outdoors when there is high precipitation or high humidity conditions.

PART 2 - PRODUCTS

2.1 ACCEPTABLE MANUFACTURERS

A. Luminaires:
   1. Base:
      a. As indicated on schedules.

B. Lamps:
   1. Base:
      a. GE Lighting.
      b. Osram Sylvania.
      c. Philips Lighting Company.
      d. Ushio (LED).
      e. Xiacato (LED).
      f. Cree (LED).

C. Contactors:
   1. Base:
      a. Schneider Electric/Square D.

b. Eaton Electrical.
c. General Electric.
d. Allen-Bradley.

D. Selector switches:
1. Base:
a. Allen-Bradley.
b. Eaton Electrical.
c. Schneider Electric/Square D.
d. General Electric.
e. Siemens Allis-ITE.

E. Exterior Motion Sensor/Photocell Switches:
1. Acceptable Manufacturers:
a. Hubbell
b. Wattstopper
2. Sensor Switch Description: Wall or ceiling mounted infrared motion sensor uses ¾" threaded nipple to attach to standard NEMA weatherproof junction box, adjustable delay before shutting off lights.

F. Rigid PVC conduit:
1. Base:
a. As specified in Section 26 05 33.

G. Other manufacturers desiring approval comply with Section 00 26 00.

2.2 MATERIALS

A. Underground wiring:
1. Type XHHW or THW installed in rigid PVC conduit.
2. Provide all wiring runs with separate green equipment grounding conductor, and ground all pole bases.

B.

C. Diffusers: 100 percent virgin acrylic Plexiglas.
1. All hardware and fasteners corrosion resistant finished.
2. Clear Plexiglas diffusers or lenses are required for certain luminaires, see Schedule.

D. Contactors: Electrically held type, rated at 480 volts AC, 30 ampere lighting load, minimum with number of poles required, 120-volt operating coil, designed for tungsten, fluorescent metal halide, high pressure sodium or mercury lamp loads.
1. Provide NEMA 1 sheet metal case.
2. Schneider Electric/Square D, Class 8903.

2.3 LUMINAIRE CONSTRUCTION

A. Use fixtures conforming to UL Standards, bearing UL labels, and manufactured in accordance with NEC.

B. Make luminaire materials resistant to corrosion and thermal and mechanical stresses encountered in normal application. Provide accessory equipment such as starters, sockets and lampholders, approved by UL and ETL, unless otherwise noted.

C. Enclosures: Complete with closed cell neoprene gaskets to form weatherproof assembly with IP rating as specified in Lighting Equipment Schedule, or on drawings.

D. Housing: IP65 rated unless otherwise noted; hinged and gasketed access door with catch; slip-fitter with set screws.

2.4 LAMPS

A. LED's:
1. Color temperature specified shall be uniform for all LED modules within like luminaire types. Color temperature measurement shall have a maximum 2 SDCM on the MacAdam Ellipse.
2. Minimum color rendering index (CRI) of 85.
3. LED light output and efficacy shall be measured in accordance with IES LM-79 standards.
4. LED life and lumen maintenance shall be measured in accordance with IES LM-80 standards.
   a. Minimum rated life of 50,000 hours.

2.5 INDIVIDUAL LEDS SHALL BE CONNECTED SUCH THAT A FAILURE OF ONE LED WILL NOT RESULT IN A LIGHT OUTPUT LOSS OF THE ENTIRE LUMINAIRE.DRIVERS

A. LED Drivers
1. Driver shall operate from 60 Hz input source of 120V through 277V with sustained variations of +/- 10 percent (voltage and frequency).
2. Driver input current shall have Total Harmonic Distortion (THD) of less than 20 percent when operated at nominal line voltage.
3. Driver shall have a Power Factor greater than 0.90.
4. Driver shall avoid interference with infrared devices and eliminate visible flicker.
5. Driver shall comply with ANSI C62.41 Category A for Transient protection.
6. Driver shall comply with the requirements of the Federal Communications Commission (FCC) rules and regulations, Title 47 CFR part 18, Non-Consumer (Class A) for EMI/RFI (conducted and radiated).
7. Control device must be compatible with type of driver, and coordinated prior to submission of shop drawings.
8. If driver is remote-mounted, provide maximum allowable distances for secondary wire runs to luminaires.
9. Confirm operating temperature range is suitable for installation within exterior, gasketed fixtures.
10. Provide with remote mounting hardware as required.
11. The driver shall be manufactured in a factory certified to ISO 9001 Quality System Standards.
12. Manufacturer shall provide five year product warranty from date of substantial completion.

2.6 CONTROLS

A. Exterior lighting control: Motion sensors with integral photosensors.
1. All Night and exterior emergency circuits turned on and off by motion sensors and photosensors.
2. Control system: 120 volts.
3. Control wiring: No.14 AWG minimum.

B. Surface Mounted Passive Infrared Motion Sensor with Integral Daylight Sensor:
1. The passive infrared surface mounted adjustable sensor shall be capable of detecting prescence in the control area by detecting changes in the infrared energy.
2. Provide sensor with appropriate coverage pattern for application.
3. Time delay range shall be adjustable from 1 to 30 minutes, with a default setting of 20 minutes.
4. Sensor shall come with mounting bracket and mounting plate.
5. Sensor shall have a minimum IP65 rating for weatherproof applications.
6. 50 mm 1/2 IN conduit entrance.
7. Fail-safe operation.
8. Provide time delay device to eliminate nuisance switching.
9. Provide unit with surge protection.
10.

11. Photosensor sensitivity shall be 0-200 footcandles.

C. Emergency circuit cabinet: Hinged-door flush cabinet for emergency All Night exterior exitway lights, complete with terminal strips and selector switch on door to permit manual operation of control circuit in event photo cell becomes inoperative.
   1. Provide engraved nameplate reading Exterior Emergency Lighting.
   2. Cabinet to contain only emergency circuit control wiring.

PART 3 - EXECUTION

3.1 INSTALLATION

A. Strictly follow the manufacturer's directions for installation of all lighting equipment. Assemble and wire luminaires, with lamps, in such a manner to ensure correct operation and maintain integrity of sealed compartments.

B.

C. Make conduit bends without injuring conduit or reducing internal diameter.

D. Install photo cells approximately 1830 mm 6 FT above roof with cells facing north.

E. Install time switch and emergency circuit cabinets 1525 mm 5 FT above floor in _____.

F. Exterior lighting control circuits as follows, including various lighting systems as scheduled.
   1. All Night circuit No.1.
   2. Part Night circuit No.2.
   3. Emergency circuit No.3.

3.2 RELAMPING AND CLEANING

A. Replace all inoperable lamps with new lamps prior to Date of Substantial Completion.

B. Replace all noisy and malfunctioning drivers prior to Date of Substantial Completion.

C. Remove all paint splatters, trapped condensation, dirt and debris. Touch up any visible damages to luminaire finish.

D. Wipe clean all luminaire reflectors, lenses, lamps and trims, after installation. Use cleaning materials and methods that will not damage finish.

3.3 SPECIAL PROTECTION

A. Wherever fixtures are provided with protective covers suitable for use after installation, leave such covers in place throughout construction period, and remove immediately prior to Date of Substantial Completion.

END OF SECTION

SECTION 28 13 13

CARD ACCESS CONTROL SYSTEM (SECURITY MANAGEMENT SYSTEM)

PART 1 - GENERAL

1.1 DEFINITIONS

A. General:
   1. Where required, terms are defined herein, which make up the provision of a Card Access Control System (Security Management System).
      a. "Owner" - Omnitrans
      ~~b.~~ "Project" - Omnitrans San Bernardino Transit Center – 599 W. Rialto Ave. San Bernardino, CA 92410
      c. "CCTV" – Surveillance Television Camera System
      d. "ACMS" - Access Control and Alarm Monitoring System
      e. "ACP" - ACMS Access Control Field Panel
      f. "ERAC" - Equipment Racks and Consoles
      g. "FIPS" – Federal Information Processing Standard
      h. "NVR" – Network Video Recorder System
      i. "Specification" - This document
      j. "Construction Documents" - Drawings, Specification, Owner and Division 1 Requirements
      k. "Provide" - Furnish and Install
      l. "Work" - The installation and programming required for a fully functional security management system
      m. "Contractor" - General Contractor
      n. "AFF" - Above the Finished Floor

1.2 PROJECT DESCRIPTION

A. The work pertains primarily to the existing Lenel On-Guard ACMS system currently being utilized by the Owner. All new doors shall add to current access levels as directed by the Owner.
   1. The goal of this project is to renew/expand and warranty both the new and existing ACMS equipment for a period of three (3) years. The Lenel On-Guard system software being presently used is version 6.45.00; update 1.1 (1.1.0).
   2. Contractor shall fully test all security peripherals. Where applicable, defective, non-functioning equipment required for functional operation will be replaced. Contractor shall assume maintenance for all existing/new ACMS firmware, hardware, functionality, interfaces and programming.
   3. The Contractor shall, on-site, provide two (2) additional spare parts for all major security peripherals, which includes, but is not limited to:
      a. ACP panel communication equipment
      b. Lenel dual controllers, two input-card reader modules, door contacts, request-to-exit devices and other lead items to support fast restoration of ACMS equipment.

B. The contractor shall expand and completely renew the existing Lenel ACMS currently installed at the Owner's facilities in accordance with the security specification and drawings. Specifically, the ACMS must support the following functionality/requirements:
   1. All ACMS power shall be derived via a dedicated electrical circuit. The Contractor shall provide, dedicated circuits for all head-end ACMS equipment including, but not limited to:
      a. Door hardware power supplies
      b. ACMS/ACP equipment

c. ACMS peripherals.

2. The existing security systems, which include access control and surveillance systems shall be documented in the shop and as-built drawings. The Contractor shall identify all make/model information, including serial numbers, for all ACMS equipment at the site. This shall include, point devices, ACMS equipment, hardware, software, peripherals and new/existing surveillance equipment.
3. Presidential Directive (HSPD) 12 to meet the virtual access restrictions requirements and standards under Federal Information Processing Standards Publication (FIPS PUB) 201.
   a. The scope of work pertains to the replacement of all existing proximity access control readers with FIPS 201 compliant readers that are backwards compatible and will operate with the Owners current credential.
      1) In addition, access control readers, as shown on the security drawings, will be re-mounted to support front and side ADA approaches.
4. The Contractor shall completely re-program the ACMS, which will require the re-creation of access levels, time-zones, scheduled Omnitrans holidays, and exceptions for a variety of users for the three facilities identified above.
5. The Contractor shall provide CAT 6 Network cabling. Network cabling shall be provided at each new location where an Access Control Panel (ACP) is required. All new cabling shall be installed in accordance with applicable Omnitrans IT specifications.
   a. Dedicated network cabling shall be provided for each controller utilized. Multiple controllers shall not be multiplexed / networked via a single network connection.
6. The Contractor shall completely renew and expand the ACMS installation, wiring, cabling, labeling in accordance with the specifications and drawings. This includes, but is not limited to:
   a. Increasing the expansion capability to add an additional 25% to all existing/new access control panel locations. This includes any firmware, hardware, inputs, outputs, interfaces, licensing, updates as required to facilitate operation of the ACMS.
   b. Include a parts/material warranty in accordance with the specifications for both new and existing ACMS equipment.
   c. Review, renew and provide corrective repair for all third-party interfaces, including fire interfaces.
   d. In some instances, existing ACMS equipment is co-located with other related security equipment. The Contractor, as part of their work, shall completely segregate ACMS peripherals within dedicated enclosures. Specifically ACMS equipment shall not be co-located with surveillance equipment, locking hardware or other unrelated equipment.
      1) All existing ACMS equipment is to be renewed and all new ACMS equipment shall fully comply with the specifications, herein.
         a) Existing ACP wiring shall be completely re-dressed, harnessed and re-labeled in accordance to this specification.
         b) The goal of this project is to renew/expand and warranty both the new and existing ACMS equipment for a period of three (3) years.

C. Where required provide digital key management panels that shall interface to a FIPS 201 compliant reader.

D. As part of the Contractor's work, two cameras shall be provided in accordance with the security drawings and specification. The cameras shall interface to the existing networked video system, which is integrated with the ACMS.
   1. All licensing, firmware updates, software, hardware, and any other requirement for functionality shall be provided by the Contractor to facilitate video connection on the video management system.

E. The Contractor shall provide separate pricing, as identified in the Add/Alternate section. Add/Alternates shall be completely segregated from the base pricing, and will be inclusive of all equipment required for system functionality.

F. The existing ACMS shall remain operational during the renewal work. All work to the ACMS panels shall be based on an Owner approved pre-defined schedule provided by the Contractor. This schedule will be provided 14 days, prior to the commencement of work.

G. Aspects of this project are within finished spaces, which include paint, trim, wall covering, floor treatments, lighting and building mechanical systems. The Contractor shall perform the specified work in such a manner that all work within finished spaces is restored to the original condition. During the course of performing the work specified herein; if the Contractor should encounter any damaged finishes in any area where the Contractor's work is to be performed, the Contractor will notify the Owner in writing prior to performing work in that area. Only after receiving written confirmation that the existing conditions have been documented, and that authorization has been given to proceed, will the Contractor proceed with the work in these areas.

H. Existing unused communication cabling shall be removed and shall not be abandoned in accordance with National Electrical Code (NEC). It is acceptable with Owner approval to coil cable, label origination, termination points and describe cable for future use. All peripherals to which abandoned cable is attached will be removed when cable is requested to be coiled for future use.

1.3 RELATED WORK/REFERENCES

A. Drawings and general provisions of Contract, including General and Supplementary Conditions and Division 1 Specification Sections, apply to this Section.

B. Requirements of the following Sections and Divisions apply to this Section:
   1. 08 71 00 Door Hardware
   2. 28 13 43 Telecommunications Cabling
   3. 27 05 26 Grounding
   4. 26 05 33 Raceways and Boxes
   5. 27 05 29 Hangers and supports for cabling

C. Referenced code and standards that shall be applicable to the Contractor’s work shall include:

D. ADA, Americans with Disabilities Act.

E. NFPA 70, National Fire Protection Association, National Electrical Code.

F. NFPA 101, National Fire Protection Association Life Safety Code.

G. National, State and Local Governing Codes.

H. UL, Underwriters Laboratories Standards for Safety.

1.4 GENERAL REQUIREMENTS AND CONDITIONS

A. The Contractor shall configure the system as described and shown. The system shall include all connectors, adapters, and terminators necessary to interconnect all equipment and provide for a functional ACMS.

B. Work areas shall be kept clean and orderly.

C. The Extent of Work: The System shall be installed in accordance with the Construction Documents.

D. Data Entry: The Contractor shall enter all data needed to make the system operational. The Contractor shall identify and request from the Owner, any additional data needed to provide complete and operational ACMS / NVR system
   1. The Contractor shall completely renew the ACMS system access levels, time-zones, access levels, access groups, exceptions, naming, interfaces, timing, scheduled Omnitrans holidays, and any other programming related to the desired functionality for the ACMS.

E. Cabling shall be encapsulated within conduit in accordance with the electrical specifications and

direction on the security drawings and as specified herein.

F. Coordination, which is limited to, but not withstanding to the following must be coordinated, and if applicable subcontracted by the Contractor. This includes:
   1. Fire wall penetrations and repair.
   2. Masonry penetrations and repair.
   3. Riser penetrations and repair.
   4. Sleeve locations, provided by others.
   5. Electrical power requirements.

G. Unless otherwise noted, cabling shall be continuous without splices. If the Contractor does not notify the Owner of required splices for any reason, the cost to provide a connection or provide a warranty period that is acceptable to the Owner shall be the burden of the Contractor.
   1. Cabling splices as required for card reader re-location to support ADA compliance shall be acceptable; however, splicing shall be permanent and occur at an accessible ceiling area.
      a. All spliced cable shall be butt soldered with heat-shrink tubing.
      b. All cable splices shall be identified on the as-built drawings

H. The Contractor shall provide surge suppression and grounding equipment, for all equipment required to protect head end security equipment as well as external systems that may or may not be associated to security equipment.

I. It shall be the Contractor's burden to prove that any manufacturer or model other than the ones listed for each product meet or exceed the requirements stated herein, if submitted.

1.5 SYSTEM MODIFICATIONS

A. The Contractor may not alter or modify software or firmware without the Owner's written approval. Damage to systems, as a result of firmware or software modifications made by the Contractor, shall be the burden of the Contractor to remedy.

1.6 QUALITY ASSURANCE

A. Qualifications: Company with a minimum of five (5) years system design, engineering supervision, and installation experience in security systems and has been authorized to install the products being specified.

B. System Checkout:
   1. Pre-testing: All components and assemblies of the control unit are to be pre-tested at the factory prior to shipment.
   2. On-Site Testing: Manufacturer trained and authorized systems Integrator shall functionally test each component in the system after installation to verify proper operation and confirm that the panel wiring and addressing is accurate.

1.7 CONTRACTOR QUALIFICATIONS

A. The Contractor shall have an office that is staffed with personnel trained in Integrating Security Management Systems, such as those specified. Technicians shall be fully capable of providing instruction and routine and emergency maintenance service on all Security Management System components.

B. The Contractor must be authorized by the manufacturer (United Technologies Corporation / Lenel) to install, maintain and warranty the ACMS systems being renewed / installed.

1.8 WARRANTY

A. System Components shall be warranted for a period of three (3) years that shall begin immediately after the Owner's written acceptance for the systems installed.
   1. The warranty shall include all existing and new access control equipment.

1.9 SECTION REQUIREMENTS

A. Scope of Work:
   1. The intent of this document is to provide all pertinent information to allow the Contractor to bid the labor, supervision, tooling, and miscellaneous consumables to provide a complete security management system. It is the responsibility of the Contractor to include any and all items required for a complete security management system, even if not identified in the Construction Documents.

B. Employees: The Contractor shall furnish to the Owner a list of employees, all key personnel and the project representative(s). The Contractor shall provide a Lenel certified employee as a main point of contact for the duration of the project.

C. Schedule: The Contractor shall prepare and maintain a detailed schedule that shall indicate detailed activities for the projected life of the project. It will also detail manpower usage throughout the project. All shop drawings, changeorders, and where applicable, materials must be approved by Owner prior to start of construction. Any change orders must be approved by Owner prior to start of the change order work.

D. Cutting, Drilling, Patching, etc.: The Contractor shall be responsible for providing any additional cutting, drilling, fitting or patching required, that is not indicated as "provided by the Contractor to complete the Work or to make all parts fit together properly. The Contractor shall take care of to:
   1. Submit a Cutting/Drilling/Patching request to the Owner in writing in advance of any alteration that affects:
      a. Work of Owner or any separate Contractor.
      b. Structural integrity of any element of Work.
      c. Integrity of weather-exposed or moisture-resistant element.
      d. Efficiency or maintenance of operational element.
      e. Visual qualities of sight-exposed elements.
   2. The Cutting/Drilling/Patching Request shall include:
      a. Identification of Project.
      b. Location and description of affected Work.
      c. Necessity for cutting or alteration.
      d. Description of proposed work, and products to be used.
      e. Alternatives to cutting and patching.
      f. Effect on work of Owner or separate Contractor.
      g. Date and Time work will be executed.
   3. The Cutting/Drilling/Patching Materials shall be required to match original installation.

1.10 THIRD PARTY DEVICE INTERFACES

A. The Contractor is responsible for providing interfaces to the following devices:
   1. Fire Alarm interfaces – this work will be subcontracted by the Contractor to the Owners approved fire protection contractor.
   2. 08 71 00 Door Hardware / accessible operators
   3. Integral and external Request-To-Exit Micro-Switches (Within Door Hardware) or exterior motion based.

1.11 SUBMITTALS

A. Submittals: Include all subsystems that shall comprise the security systems.
   1. Manufacturer's Installation Instructions: Indicate methods for integrating and installing devices.
   2. Any relevant wiring schematics or methods of installation.
   3. Provide as part of their overall submittal a bound three-ring binder. Front cover should have adequate space for 7 inches by 7 inches Review Stamp. Each section shall be tabbed to the corresponding specification number and title.

4. A clear and legible table of contents shall be provided with space below each line item for reviewer comments.
5. The Contractor shall confirm existing device placement, point-to-point cabling, new and existing device locations and associated panel terminations on the shop drawings

B. Technical Data Package I:
1. Drawings:
   a. Document both new and existing ACMS and the surveillance devices specified herein and shown on the drawings.
      1) Devices will be clearly identified and the manufacturers model and serial numbers shall be provided for each device.
   b. Provide detailed system drawings, including location and mounting requirements.
   c. Complete and legible legends should be provided for each of the drawings.
   d. Provide functional block diagrams.
   e. Provide mounting details, indicating mounting, protective housings etc.
   f. Provide wiring diagrams and point-wiring schematics to panels, indicating utilized inputs and spare inputs.
   g. Details of connections to power sources, including power supplies.
   h. Console/Rack installation, block diagrams, and wiring diagrams.
   i. Denote main cable pathways or individual home runs.
2. Product Data:
   a. Provide original color product datasheets, describing the specification and technical requirements of the system and each component. When multiple products are listed, denote by highlighting or other form which product they intend to use.
   b. Miscellaneous cut sheets for wire, cable; terminal block connector's, etc. clearly identifies model numbers, manufacturer names and miscellaneous engineering data.
   c. Product data sheets and supporting information for all third part interfaces such as door-release and duress (Panic) switches. All door release and duress buttons must be clearly distinct from each other in appearance.
   d. Provide equipment quantities and model numbers for all equipment being proposed.
   e. Provide engineering calculations, such as voltage drop, electrical load calculations, etc. as it relates to devices.
3. System Description:
   a. Include system descriptions, analyses, and calculations used in sizing equipment specified. Descriptions and calculations shall show how the equipment will operate as a system to meet the performance of this specification.
   b. Furthermore the description shall identify:
      1) Communication speeds and protocol descriptions
      2) Command response time calculations.
      3) Start-up operations.
      4) Expansion capability and method of implementation.
4. Certifications:
   a. Specified manufacturer's certifications shall be included with the data package certification.

C. Technical Data Package II:
1. Verify that site conditions are in agreement with the design package. The Contractor shall submit a report of "Current Site Conditions" to the Owner documenting changes to the site, or conditions that affect performance of the system to be installed. For those changes or conditions which affect system installation or performance, provide (with the report) specification sheets, or written functional requirements to support the findings, and a cost estimate to correct the deficiency. The Contractor shall not correct any deficiency without written permission from the Owner.

D. Technical Data Package III:
1. Prepare test procedures and reports for the performance verification test.
2. The Contractor shall deliver the performance verification test procedure to the Owner for

approval. After receipt by the Contractor of written approval of the test procedures, the Contractor may schedule the tests. The Contractor shall provide a report detailing the results of the field test as specified in “Contractor’s Field Testing." The final performance verification report shall be delivered after completion of the tests.

E. Technical Data Package IV:
   1. Final copies of each of the manufacturer's commercial manuals arranged as specified bound in hardback, loose-leaf binders shall be delivered to the Owner within thirty (30) days after completing the performance test. The draft copy used during site testing shall be updated prior to final delivery of the manuals. Each manual's contents shall be identified on the cover. The manual shall include names, addresses, and telephone numbers of each Contractor installing equipment and systems, and nearest service representatives for each item of equipment for each system. The manuals shall have a table of contents and tabbed sheets. Tabbed sheets shall be placed at the beginning of each chapter or section and at the beginning of each appendix. The final copies delivered after completion of the performance test shall include all modifications made during installation, checkout, and acceptance. Four (4) hard copies of each manual and Two (2) electronic copies on Compact Discs (complete with an organized file structure) shall be delivered to the Owner.
   2. Functional Design Manual
      a. Provide - 4 (four) copies of the functional design manual. The functional design manual shall identify the operational requirements for the system and explain the theory of operation, design philosophy, and specific functionality. A description of hardware and software functions, interfaces, and requirements shall be included for all system operating modes.
   3. Hardware Manual
      a. A manual shall describe all equipment furnished, including:
         1) General hardware description and specifications.
         2) Installation and checkout procedures.
         3) Equipment electrical schematics and layout drawings.
         4) System schematics and wiring lists.
         5) Alignment and calibration procedures.
         6) System setup procedures.
         7) Manufacturer's repair parts list indicating sources of supply.
         8) Interface definition.
   4. Operation Manuals
      a. Provide - 4 (four) copies of the operation manuals. The operation manual shall contain all instructions required for operation of the system.
      b. The operator's manual shall explain all procedures and instructions for operation of the system.
         1) Operator commands.
         2) Recovery and restart procedures.
         3) System start-up and shutdown procedures.
      c. Concepts and procedure that shall aid in the overall understanding of the system.
   5. Maintenance Manuals
      a. Provide- 4 (four) copies of the maintenance manuals. The maintenance manuals shall contain all information required for maintenance of the system.
      b. Wiring diagram, details, accurate cable pathway, power schedules, and fold out drawings as well as related information shall be provided.
      c. The maintenance manual shall describe maintenance for all equipment including inspection, periodic preventive maintenance, fault diagnosis, and repair or replacement of defective components.
   6. Manufacturer's service manuals
      a. Provide warranty letter.
   7. Record Drawings
      a. Provide electronic copies of all updated drawings, denoting existing conditions, changes to the Construction Documents and the date at which the change took place.

b. Provide updated drawings, which illustrate final field conditions; these drawings shall incorporate all changes to the Construction Documents.
c. Panel power schedules, denoting circuits dedicated for use.
d. Wire and cable run sheets including cable identification numbers and terminal strip designations.
e. Legends which indicate device types, symbols, abbreviations, and manufacturer's model numbers.
f. Functional block diagrams for all subsystems. Schematic diagrams for all custom circuitry and interfaces to work, which will include work that is not part of the Contractor's scope, but relevant to the systems being installed.
g. Elevations for equipment and/or riser closets, which show the exact configuration and physical installation of related equipment, interface panels, power supplies, junction boxes, and equipment cabinetry.
   1) Locations of all circuit splices, where allowed.

8. A draft copy of the operation and maintenance manuals, as specified for the Technical Data Package IV, shall be delivered to the Owner prior to beginning the performance verification test for use during site testing.

1.12 SYSTEM ACCEPTANCE

A. The system shall be ready for Owner acceptance one (1) week prior to the system "on-line" date established by the Owner. The Contractor shall coordinate and obtain the date from the Owner.

B. The Contractor shall provide the following for system acceptance:
   1. All test reports and certification certificate.
   2. Warranty certificate.
   3. A binder with detailed product data sheets of all products used in the project.
   4. The punch-list cleared and completed and signed off from the Owner.
   5. Complete schedule of contract invoices and complete schedule of change order invoices.
   6. Completed Technical Data Packages I, II, III, and IV.

1.13 MAINTENANCE AND SERVICE

A. Service personnel shall be certified in the maintenance and repair of similar types of equipment being specified and qualified to accomplish work promptly and satisfactorily. The Owner shall be advised in writing of the name of the designated service representative, and of any change in personnel.

B. The Contractor shall provide all services required and equipment necessary to maintain the entire security system in an operational state as specified for a period of three (3) years after Owner sign off/acceptance, and shall provide all necessary material required for the work. Impacts on facility operations shall be minimized when performing scheduled adjustments or other unscheduled work.

C. The adjustment and repair of the security system includes signal transmission equipment. Provide the manufacturer's required adjustments and all other work necessary. This shall include the adjustment and repair of the system communications transmission equipment, local processors, sensors, facility interface, and support equipment. Responsibility shall include both new and existing equipment. The manufacturer's required adjustments and other work as necessary shall also be provided.

D. The Owner will initiate service calls when the security system is not functioning properly. Qualified personnel shall be available to provide service to the complete security system. The Owner shall be furnished with a telephone number where the service supervisor can be reached at all times. Service personnel shall be at the site within 4 hours after receiving a request for service. The security system shall be restored to proper operating condition within 1 calendar days after receiving a request for service.

E. Performance of scheduled adjustments and repair shall verify operation of the security system as

demonstrated by the applicable portions of the performance verification test.

F. The Contractor shall keep records and logs of each task, and shall organize cumulative records for each major component and for the complete system chronologically. A continuous log shall be maintained for all devices. The log shall contain calibration, repair, and programming data. Complete logs shall be kept and shall be available for inspection on site, demonstrating that planned and systematic adjustments and repairs have been accomplished for the security system.

G. During the warranty period, the Contractor shall perform minor inspections at 6 month intervals (or more often if required by the manufacturer), and major inspections offset equally between the minor inspections to effect quarterly inspection of alternating magnitude.
   1. Minor Inspections
      a. Minor inspections shall include visual checks and operational tests of console equipment, peripheral equipment, local processors, sensors, and electrical and mechanical controls. Minor inspections shall also include mechanical adjustments.
         1) Run system and correct all diagnosed problems.
         2) Resolve any previous outstanding problems.
   2. Major Inspections
      a. Major inspections shall include work described under paragraph Minor Inspections and the following work:
         1) Clean all system equipment and local processors, including interior and exterior surfaces.
         2) Perform diagnostics on all equipment.
         3) Check, walk test, and calibrate each system component.
         4) Run all system software diagnostics and correct all diagnosed problems.
         5) Resolve any previous outstanding problems.
   3. Scheduled Work
      a. Scheduled work shall be performed during regular working hours, 8:00 a.m. – 5:00 p.m. Monday through Friday, excluding federal holidays.

H. The Contractor shall separately record each service call request, as received. The form shall include the serial number identifying the component involved, its location, date and time the call was received, nature of trouble, names of the service personnel assigned to the task, instructions describing work to be completed, the amount and nature of the materials to be used, the time and date work started, and the time and date of completion. The Contractor shall deliver a record of the work performed within (5) five days after work is completed.

I. The Contractor shall make any recommendations for system modification in writing to the Owner. No system modifications, including operating parameters and control settings, shall be made without prior approval of the Owner. Any modifications made to the systems shall be incorporated into the operations and maintenance manuals and other documentation affected.

J. The Contractor shall recommend all software updates to the Owner for approval. Upon Owner approval, updates shall be accomplished in a timely manner, fully coordinated with the security system operators, operation in the system verified, and shall be incorporated into the operations and maintenance manuals, and software documentation.
   1. There shall be at least one scheduled manufacturer software update near the end of the three (3) year warranty period, at which time the Contractor shall install and validate the latest released version of the manufacturer's software for the Security Management System.

1.14 PROJECT CONDITIONS

A. Environmental Limitations: System components shall be equipped and rated for the environments where installed.

1.15 COORDINATION

A. Coordinate layout and installation of security system equipment and components in accordance with ADA requirements, and other construction elements.

B. In instances where the existing access control reader is outside of ADA compliance, the Contractor shall extend cabling and conduit to allow the replacement of the existing card reader with a new FIPS 201 compliant card reader that is within ADA requirements. Refer to detail drawings for additional information.

C. The existing ACMS shall remain operational during the renewal work. All work to the ACMS panels shall be based on an Owner approved pre-defined schedule provided by the Contractor. This schedule will be provided 14 days, prior to the commencement of work.

D. The Contractor shall coordinate with the owner for the locations of all new equipment. No new control equipment shall be installed until approval from the owner has been granted.

PART 2 - PRODUCTS

2.1 GENERAL

A. All hardware and software system components shall be produced, or be completely compatible and seamlessly integrated, with a single manufacturer (LENEL/AXIS or equivalent). All ACMS equipment shall be current production, and the latest model or version of all equipment shall be utilized. Equipment or software that is **known to** being "phased out" by the manufacturer shall not be acceptable within 18-months of the installation completion.

B. The Contractor shall perform pre-delivery testing and adjustment of the completed surveillance, ACMS and other components that shall make up the security management system. The Contractor shall provide all personnel, labor, equipment, instrumentation, and supplies necessary to perform all testing. Written notification of planned testing shall be given to the Owner at least 14 days prior to the test and, in no case, shall notice be given until after the Contractor has received written approval of the specific test procedures.

C. Fire Alarm Interface
   1. Door hardware power supplies shall be capable of receiving a relay input from the fire alarm system, per the prevailing code requirements. This relay input shall be solely utilized for deactivation (unlocking) of access controlled doors within a path of egress upon initiating signal from the fire alarm system.
      a. The Contractor shall extend cable and conduit for connection to third party fire interfaces for all doors within a path of egress.
         1) Refer to Division 26-27 drawings for the location of fire panels and U.L./fire interface connection points.
   2. The Contractor must provide the coordination for all required interfaces with the building fire alarm systems and provide a fire interface for all portals requiring automatic fire alarm system unlocking.

D. Third Party Device Interface(s)
   1. The Contractor shall be responsible for providing interfaces as required to provide control, monitoring, and functionality of the following devices:
      a. Request-to-Exit Devices (Within Door Hardware)
         1) The contractor shall be required to interface to third party or separate request-to-exit device functionality being provided by the Contractor. The Contractor shall not modify or alter, in any way, the third party device, other than the termination of cabling/wiring for connection to security peripherals.
      b. Door Release Devices operators
      c. Duress (Panic) Buttons
      d. Accessible Door Operators
         1) The Contractor shall provide an interface for controlling doors equipped with accessible door operators (handicapped door opening buttons), provided by Contractor. The following conditions must be met and shall be provided by the Contractor.
            a) Accessible door operators shall not be functional until the presentation of

an approved access control card. The access control card shall enable the handicapped push pad, which shall energize the door operator.

b) Following a pre-set time period, to be coordinated with the Contractor, the automatic door opening device shall shut close, and the door shall re-lock.

c) The Contractor shall provide any and all interfaces to allow exiting from doors equipped with door operators and electrified hardware controlled by the ACMS. The Contractor shall provide a connection to the handicapped operator or third party request- to-exit sensor to de-energize/energize the associated hardware, prior to activation of the door operator.

2.2 ACCESS CONTROL PANELS (ACP)

A. ACP(s) shall serve to gather data generated by security field devices and shall meet UL requirements. Communication from the panel shall be transmitted to the ACMS server via a networked connection. ACPs shall include control circuitry required to energize or de-energize power circuits to electric door locking devices.

1. ACP locations are generally depicted on the security drawings. The Contractor shall provide the exact number of ACP panels required, additionally allow for an additional 25% capacity, which shall include hardware, firmware to support additional monitoring points, card readers and associate outputs.

B. ACPs shall incorporate provisions for uninterrupted standby battery power as required to insure continued operation in the event of power failure. Power supplies used shall be designed to send a signal to the ACMS in the event of a power loss, low battery, or short. Battery back-up shall be maintained in the event of a power loss for no less than eight (8) hours. The Contractor shall replace all batteries at the end of the 3-year warranty period.

C. ACP shall utilize a distributed intelligence, modular design allowing normal access decisions to be handled locally without communication with the host server. Database uploading from and down to the ACPs shall be accomplished automatically by the ACMS server on a time and day schedule, which shall be coordinated with the Owner.

D. The ACP shall be a 32 bit microprocessor based device that shall use flash memory technology to enable remote firmware upgrade from the ACMS server.

E. Firmware

1. The Contractor may not alter or modify software or firmware without the manufacturer's written approval. Damage to systems as a result of firmware or software modifications made by the Contractor shall be their responsibility to correct.
2. The ACP shall conduct an internal error checksum on all uploaded firmware to a secondary bank of memory, prior to the panel update. The error checksum shall ensure that the firmware is free from corruption.
3. Each ACP panel shall be provided with the most current version of firmware. Firmware shall be flashable.
   a. Field replaceable firmware shall not be acceptable.
4. The Contractor, as part of their Work, shall update the firmware to the most current (non-beta) release at least annually and prior to the end of the 3-year warranty period. The firmware update shall be part of the Contractor's work and at no cost to the Owner.
   a. Existing ACP wiring shall be completely re-dressed, harnessed and re-labeled in accordance to this specification.
5. The ACP shall be fully autonomous and shall not require communication to the host server in the event of an off-line state. An off-line state will be server.
6. While in this off-line state, the ACP shall make access granted/denied decisions and maintain a log of the events, including alarms that occur. Events shall be stored in local memory and uploaded to the system software after communications is restored.

F. The security panel shall pull and push data including, but not limited to, card records, time, and event alarm monitoring.

1. Events shall be transmitted to the host or regional server, which shall maintain all databases and perform automatic polling of systems and devices connected to it.
2. The host server shall continuously poll security panels connected to it; at the optimum frequency of polls recommended by the manufacturer.
3. An alarm shall be generated to the ACMS server and associated client servers when a panel has stopped communicating with the host or regional server.
4. The Contractor shall be responsible for the installation of all transceivers and miscellaneous communication devices as required for connection to the host server.

G. Installed memory
1. ACP shall buffer a minimum of 1,000 transactions at the panel when communications with the host/server is interrupted and shall support locally, a minimum of 3,000 card holders per ACP with the following exceptions:
   a. ACPs utilized for elevator access shall support locally, a minimum of 1,000 card holders.
   b. The Contractor shall provide adequate memory within the ACP to comply with transaction buffer requirements.

H. ACP Functionality
1. ACP response time to activate a lock device after presentation of a valid access credential shall not exceed one (1) second regardless of system activity level.
2. Two (2) seconds shall be acceptable only when the panel must communicate to its host server and query rights associated with the cardholder.
3. Alarm signals generated from ACP alarm inputs shall appear at the ACMS workstations within a maximum of two (2) seconds regardless of the system activity level.
4. Each ACP shall support up to a minimum of combined eight (8) Weigand inputs or output boards connected in any combination.
5. The ACP shall be enclosed within key lockable housing with hinged door complete with a tamper switch. The housing shall be of steel construction and shall be designed for surface installation and rated for the environment the panel is being installed within.
6. The ACP shall provide cabinet tamper circuitry such that access to the ACP circuitry, power supplies, and peripherals are continuously monitored. ACP tamper alarms, shorts, battery, and communications failures shall be uniquely identified in the ACMS database and shall cause unique annunciation at operator workstations when activated.
7. All new and existing cabling connections to the ACP shall be in enclosed raceways, which will be extended to the ceiling and transition to plenum cabling. All electrical connections shall be hard-wired. Plug in transformers shall not be acceptable.
   a. ACP operating power shall be via low voltage step down transformers and connected to emergency generator power circuits. Low voltage transformers shall be enclosed within ACP cabinets or suitable auxiliary housing.
8. Each ACP shall provide for a minimum of sixteen (16) alarm devices via 2-wire, current supervised circuits and thirty-two (32) controlled relay outputs.
   a. End-of-line resistors shall not be located within the ACP.

I. ACP Communication
   a. Host communication to/from the ACP panel shall be via a networked connection.

J. Existing ACP panel wiring/labeling
1. Existing ACP wiring shall be completely redressed, harnessed and re- labeled in accordance to this specification.
   a. All ACP panel cabling/equipment shall be segregated from other related video equipment
   b. ACP paneling shall be hardwired to local emergency power; all plug-in transformers shall be removed or relocated within the electrical cabinet.
   c. ACP paneling shall be routed within metallic tubing raceway within the ACP mounting area. Cabling shall extend to the ceiling or outside of the room, where it will transition to plenum cabling, properly supported back to field devices.

K. ACP(s) shall be manufactured by Lenel and shall be comprised of Dual Controllers/ reader controller boards, software, firmware, licensing and all other requirements for functionality and integration of the ACP into the ACMS.

2.3 ACCESS CONTROL READER – MULTI-TECHNOLOGY TYPE

A. The Contractor shall install, as shown on the drawings, replace the existing access control reader with the exact type of reader that is present (extended range, dual authentication, pin/key-pad/reader, mullion and standard/single gang mounting). Replaced reader(s) shall comply with the following:
   1. The readers shall fully comply with Homeland Security Presidential Directive (HSPD) 12 to meet the virtual access restrictions requirements and standards under Federal Information Processing Standards Publication (FIPS PUB) 201.
   2. Access control readers shall be multi-technology type, capable of function with proximity (125KHz) and smart (13.56MHz) access control cards.
   3. Access control readers shall be provided as shown on the security drawings. Mullion mounted readers shall not be allowed only if the existing device being replaced is Mullion type.
   4. The reader shall output industry standard Wiegand outputs or equivalent.
   5. Card readers shall be a sealed in a single package weatherproof unit and shall be constructed of high impact ABS plastic. The color of the card readers shall be black, no exceptions.
   6. Access control readers shall derive their power from the security panel; therefore, the Contractor shall adhere to the manufacturer's guidelines for maximum distance from the reader to the security panel.
   7. When entering a door equipped with an access control reader, a card shall be presented and the unique ID code associated to the card shall be compared and analyzed from a security panel or database, which shall associate the rights to an individual. Upon access granted, the security panel shall temporarily shunt or activate power to the electrified hardware, as well as internally shunt the associated door position switch or switches for a predetermined amount of time.
   8. Access control readers shall incorporate a dual means of notification of door operation. Specifically, the access control reader shall supply an audible tone for access granted, access denied, out of service and door propped conditions. Additionally, the reader shall also supply a visual means of notification for the above events. Each of these notifications shall be selectable by the host ACMS system.
   9. Card readers shall be UL-294 certified for indoor and outdoor applications, with an operating frequency of 125 KHz for proximity and 13.56MHz.
   10. Accidental or intentional transmission of radio frequency signals into the reader shall not compromise the system.
   11. Standard card readers shall provide for read ranges not less than 2 inches for both 125KHz and 13.36MHz card technologies.
   12. Access control readers shall be equipped with an optical tamper switch to indicate if the faceplate has been removed from the card reader.
   13. Typical access control readers shall be provided on a single gang back- box, and shall be weatherized, where required, in accordance with the manufacturer guidelines. The Contractor shall take care in mounting the access control reader providing necessary spacers to prevent radio interference. Standard card readers requiring a special back box shall not be acceptable.

B. Typical single-gang access control readers shall manufactured by HID, or Owner approved equivalent.

2.4 DOOR POSITION SWITCHES - STANDARD/HIGH SECURITY

A. Door Position switches shall be provided as shown on the security drawings, and will indicate the position of the associated door, either open, closed, held or forced open.

B. Balanced surface mounted door position switches shall be provided in instances that recessed mounting is not practical / possible (i.e. loading dock doors) or required by the drawings

C. The Contractor shall supply necessary equipment for preventing a voltage surge to prevent damage to any panels or to the device itself.

D. Balanced door position switch(s) shall be supplied with armored cabling, properly supported to a junction box above and continue via point-to-point conduit back to the nearest security panel or next device as shown on the security drawings.

E. Door position switches shall be concealed/flush mounted whenever applicable. The Contractor shall coordinate with the Owner and the hollow metal Contractor of their exact needs whenever possible.

F. The door position switch shall consist of a two part hermetically sealed assembly and will be designed for either metal or wood frame installations.

G. Door positions switches shall be a single pole double throw type. The Contractor shall be responsible for providing end of line resistors, wire, mounting hardware and necessary field modifications to hollow or metal frame doors. Resistors for end of line supervision shall be provided at the end of line device location. Resistors placed at the panel and not at the device shall not be accepted.

H. Door position switches shall be made from rugged construction, self-locking, if applicable. Switches shall be designed so that separation of the door from the frame shall be no more than ¾" in which it shall cause the door position switch to change state and signal an alarm.

I. The Contractor shall coordinate with the hollow frame Contractor to determinethe location for dust boxes in fire labeled doors. Under no circumstance may the Contractor modify a fire rated/labeled door. It is the Contractor's responsibility to verify that cables are properly fire stopped in accordance to prevailing code and in accordance with the best practices of the trade.

J. Each door position switch shall be a logical point unless otherwise noted on the drawings.

K. The Contractor shall supply only magnetic types of door monitoring. Mechanical types of door monitoring shall not be acceptable.

L. Door position switches shall be provided in accordance with the drawings, details, and the specifications.

M. Door position switches shall be manufactured by Sentrol or Owner approved equivalent.

2.5 PASSIVE INFRARED REQUEST-TO-EXIT DEVICES (PIR)

A. PIR request-to-exit devices shall be provided at controlled doors as indicated on the drawings and will be designed to signal the access control alarm panel which shall shunt the door position switch(s) and energize or de-energize electrified hardware associated to the access control door allowing egress.

B. PIR request-to-exit devices will be passive infrared detectors that are designed to activate when someone enters the detection zone and again when they exit. The output from the device will be a Form C SPDT relay designed for momentary action. Surface mounted request to exit devices will have an adjustable detection pattern of not more than 5' in diameter at a distance of 8' from the detector.

C. Infrared exit shunts will provide a detection pattern of not more than 1' from the detector.

D. Infrared exit shunts will be mounted on the door frames or the wall as shown on the drawing details.

E. Ceiling mounted request to exit devices will be Kantech Systems Inc. T-REX or

F. Owner approved equivalent

2.6 REQUEST-TO-EXIT BUTTON SURFACE MOUNTED

A. Surface mounted request-to-exit devices will be provided at controlled doors as indicated on the drawings and will be designed locally interrupt power and energize or de-energize electrified hardware associated to the access control door allowing egress.
   1. Door position switches, associated to doors equipped with request to exit buttons shall not be shunted upon request-to-exit button activation.

B. Surface mounted request-to-exit devices will be designed to create an output from the device when it is depressed; the output will be a Form C SPDT relay designed for momentary action.

C. Surface mounted request-to-exit devices will be mounted on the door frames or the wall as shown on the drawing details.

D. Surface mounted request-to-exit devices will be Locknetics or Owner approved equivalent.

2.7 FIXED POSITION CCTV CAMERAS (INFRA-RED)

A. The Contractor shall provide new high resolution vandal resistant Infra-Red (IR) cameras; the location of these cameras shall be in accordance with the security drawings.

B. Camera shall be transmitted via existing or new Unshielded Twisted Pair equipment. Refer to specifications and drawings for additional detail.

C. All camera locations and field of views shall be approved by the Owner and Architect prior to installation. The Contractor shall assist the Owner in identifying the best field of view through field investigation and testing. The Contractor shall provide a monitor and camera to establish field of views of each camera for the Owner's review.

D. Cameras shall have the following characteristics:
   1. Color cameras shall be provided by the Contractor as shown on the security drawings in coordination with the Architect's RCP. The Camera shall be a half, third or quarter inch format and shall be designed to operate on 24 VAC 60Hz power sources.
   2. Color cameras shall be a solid-state design and shall incorporate an intensified, interline CCD, HAD or Hyper HAD chip with a minimum lighting for usable image usable image 0 LUX (IR enabled). The f-stop rating shall be 1.2/1.4 at 70% reflectance. For this section a usable image shall be where object and colors within the cameras view are readably discernible and have been approved by the owner.
      a. Camera shall transmit a 1-volt peak-to-peak video signal and terminate at 75 ohms with compression or friction connectors only. Cameras shall not require sync and shall be AC line locked with phase adjustment, unless otherwise noted.
      b. Cameras shall derive their power from an individually fused power supply; location as specified in the area designated for security equipment and as shown on drawings. Cameras shall be equipped with self-locking terminal switches or screw power terminals.
      c. In general auto iris lenses shall be provided for all conditions where variable lighting conditions exist. Electronic shutter shall be utilized in conditions where distortion could occur. Where applicable, cameras shall be equipped with an electronic shutter with selections from 1/50 to 1/100,000.
      d. The Contractor shall coordinate the view of each camera, prior to final rough in. The Contractor shall utilize aespherical varifocal lenses.
   3. In addition fixed position cameras shall have the following technical characteristics:
      a. Horizontal minimum resolution: 500 TVL.
      b. Signal-to-noise: 50-dB minimum with automatic gain control off.
      c. Infra Red
         1) Multi 840 nM, 180mA LED array capable of broadcasting
         2) IR light 100' at a minimum of 70 degrees
         3) Adjustable luminary beam shall be rated for 5000 hours of continuous use
      d. Camera housings shall be supplied with tamper resistant screws to prevent

unauthorized tampering.

e. Camera mounting shall be prepared in accordance to an environment where vandalism could occur. The camera mounting shall be sufficient to prevent the mount from being pried from the mounting surface.
f. The Contractor shall supply necessary specialty tools to remove tamper resistant screws to the Owner.
g. Weatherized and rated for interior or exterior housings shall be provided where applicable.
h. Exterior cameras shall be transmitted via Unshielded Twisted Pair Cable (UTP)

E. The color closed circuit television cameras shall be Pelco, Bosch, or Owner approved equivalent.

2.8 LENS OPTICS

A. Provide high quality CCTV lenses sized according to the intended area of coverage as shown on the drawings and in accordance with the following minimum specifications:
   1. Fixed cameras shall be provided with varifocal length lens optics. Lenses provided for fixed cameras will be varifocal length type and shall include provisions for automatic iris adjustment and standard "CS" or “C” mounting, unless integral to the camera. Adapter rings shall be provided for all “C” mount lenses, varifocal lenses will also be compatible with a CCD camera imager. Exact focal lengths of the lenses will be coordinated with the Owner based on the scene to be viewed.
   2. The Contractor shall supply aespherical, automatic iris lenses at locations where light levels vary. The average video level sampled from the camera will determine automatic iris operation. Iris control signals and operating voltage will be obtained from the camera and the lens will include a pre-wired (factory assembled) plug assembly compatible with the cameras being provided.
   3. Lens optics shall be high quality precision ground glass. All optics shall be fully coated and will be color corrected to provide accurate color scene reproduction.

B. CCTV lenses will be Computar, Rainbow, or Panasonic.

2.9 CAMERA POWER SUPPLIES

A. This section pertains to cameras that shall be powered from central location(s) and shall operate from a 24 VAC-power source unless otherwise specified.

B. Camera power supplies shall be distributed and located in rooms designated for security use, as shown on the security drawings.

C. Power supplies shall also have these characteristics.
   1. Support eight (8) individually fused outputs. Fused outputs shall allow the Contractor to conduct maintenance on any given camera that is connected to the power supply without dropping power to the remaining seven (7) cameras.
   2. Power supply components shall be provided in a lockable enclosure constructed for wall mounting and shall be hardwired to a local 110-volt circuit that shall be provided by Division 26-27 Contractor.
   3. Exact locations for power supplies shall be coordinated in the field with the Owner prior to rough in.

D. Power supplies shall be manufactured by Altronix or Owner approved equivalent.

2.10 ACCESS CONTROL AND ALARM MONITORING SYSTEM

2.11 AXIS VIDEO ENCODER/ VIDEO SERVER

A. The Contractor shall supply video Servers, where required.
   1. Video servers shall integrate into the Owner’s existing network
      a. Contractor shall coordinate IP address and network environment, where required to

support video.
b. Provide licensing, programming, as required to facilitate monitoring of additional cameras.

B. Video Servers shall either be rack mounted or individually mounted as follows:
1. Individual video servers shall be fully compatible with the Lenel video server and shall be:
a. Manufactured by AXIS and shall be AXIS 243SA, no substitutions.
2. Individual video servers shall not be used in instances where AXIS 243Q video encoders are existing. In these instances the Contractor shall provide a new AXIS, four-port encoder. Four port encoder shall be:
a. Manufactured by AXIS and shall be Blade type, AXIS 243Q, no substitutions.
1) Blade server rack, as required, shall be provided. Blade server rack shall be AXIS 291u.

2.12 UNSHIELDED TWISTED PAIR (UTP) TRANSCEIVERS

A. All cabling for all cameras shall utilize UTP cabling to transmit vide
1. Twisted pair video transmitters as shown on the security drawings are for the transmission of video signals over standard telephone cabling. The Contractor shall adhere to the manufacturers guidelines for a fully installed and operational device.
2. Twisted pair transmitters shall operate at minimum of 2000ft.
3. Transmission accept a baseband video signal from a 75 ohm source.
4. Shall operate on 24AWG cable or thicker.
5. Impedance shall be metered at 100 +/- 20%.
6. Wire resistance at 25° shall be 26? per 1000ft.
7. Attenuation shall be no lower than 1.5 dB.

B. UTP transceivers shall be manufactured by NVT or Owner approved equivalent.

2.13 RACEWAY

A. General
1. Sleeves for vertical raceway connectivity shall be provided by the Division 26-27 installing contractor.
2. The Contractor shall provide vertical and horizontal conduit as shown on the security drawings or sized as required in accordance with NEC and the Division 26-27 specifications/drawings.
a. Without exception, horizontal and vertical conduit raceway and sleeves provided by the Contractor shall be in conformance with the Construction Documents and the Division 26-27 specifications.

B. Contractor shall provide conduit from the device to the ceiling, where it will transition to plenum cable, properly supported back to the nearest ACP panel.

C. All vertical and horizontal cabling, unless otherwise noted, shall be encapsulated in point-to-point conduit. The Contractor shall provide all vertical conduit, horizontal conduit, junction boxes, fitting, NEMA enclosures in accordance to the specifications and drawings and as required for system functionality.
1. Junction boxes, termination boxes shall be rated for the environment where they are being installed.

D. Unless noted otherwise, conduit shall be sized as required and continuous from device to riser or termination point.
1. Refer to riser drawings, details, electrical drawings and security plan drawings for proposed connectivity.

2.14 POWER REQUIREMENTS

A. The Contractor shall review the electrical division drawings and specifications and confirm all required power for the security systems is shown. Any additional power requirements not shown on the Division 26-27 drawings shall be provided by the Contractor.

B. All ACMS equipment (existing and new) shall be hard-wired from a dedicated emergency circuit to the associated ACMS panel. Plug-in transformers and plug- in strips shall not be allowed.

C. Connect to the AC power (provided by others) and provide U.L. listed power supplies and transformers to distribute low voltage power to the system components as required.

D. Provide hinged cover, lockable terminal cabinets with tamper switches for all power supplies, transformers and power distribution terminal strips. Provide all conduit and wiring from the AC power facilities to the terminal cabinets.
   1. ACMS cabling at the ACP panel shall be encapsulated in conduit, and transition to plenum cable above 8' or when the cable exits the room, which the ACP is housed.
   2. Cabinets shall be weatherized and rated for the environment they are being installed.
   3. All locked control equipment shall be keyed alike.

E. Provide protection against electrical spikes, surges, noise, and other line problems for all system equipment and components.

2.15 CONNECTORS/CABLE

A. Where required, by any prevailing code or standard the Contractor shall adhere to the rules governing their portion of work and installation methodologies.

B. Conductors provided shall exceed or meet manufacturer guidelines.

C. The Contractor shall adequately, within enclosures, support and neatly strap and label all cabling with a code that shall be reflected in the Security shop and As-built drawings. The code shall refer to the end of line device as well as the type and gauge.

D. Firewall penetrations shall be accomplished by a sleeved piece of conduit sized

E. 100% larger than what is required to meet future cabling requirements. Conduit shall be properly fire stopped according to NFPA guidelines where required.

F. In all instances where 24VAC low voltage power shall be supplied, the Contractor shall ensure that their engineering and voltage drop calculations shall not exceed or fall below minimum requirements for the operation of the camera being provided.

G. In vertical riser conditions the Contractor shall pull cable to a common wire trough, coiling the cable at each wire trough one (1) full revolution before continuing up to the next wire trough, unless otherwise directed by manufacturer or applicable code. This shall allow the cable to displace the weight of the cable between pull points, preventing the cable from pulling apart under its own weight.

H. Coaxial Connectors
   1. The Contractor shall provide a single piece, RFI Tight Compression or friction connector for all video terminations. Three (3) piece soldered, F, UHF and screw connectors shall not be an acceptable means of terminated coax cable.
   2. The Contractor shall provide a maximum of two connectors for each coaxial cable run, unless otherwise noted.

I. Mechanical Splices
   1. Mechanical splices, unless otherwise specified, shall be via terminal blocks shall be made for all wire terminations. The Contractor may not use twist caps as an acceptable means of connecting two wires together. Terminal blocks, if used shall be housed in a NEMA or Hoffman lockable enclosure with a tamper switch connected to the access control system.

J. Coaxial Cable (Patch cables)
   1. The Contractor shall provide the cable according to the project requirements, which

includes cabling as required by the prevailing code or jurisdiction.

2. The dielectric of the coaxial cable shall be rated at 75Ω, the center core and shield (braided) shall be 100% copper with or without reversible foil. Cabling with aluminum core or shield either wholly or partially shall not be acceptable.

K. Low Voltage Wiring

1. Low voltage wiring shall be provided to power fixed cameras to transmit a 1-volt peak to peak video signal back to a receiving device.
2. In general 24 VAC wiring shall be a twisted pair cable of sufficient gauge to pass voltage the distance to a termination closet where cameras shall be powered from, if applicable.
3. Cables utilized for low voltage 24 VAC circuits shall incorporate conductors that shall not be less than 18 AWG. Conductors sizing shall be increased where required.
4. Interior Camera cabling shall be in accordance with manufacturer guidelines and Omnitrans IT requirements. Acceptable manufacturers for low voltage based cabling shall be Belden, West Penn, Berk-Tek, Draka or approved equivalent.

PART 3 - EXECUTION

3.1 EXAMINATION

A. The scope of the Work will require the temporary disconnection of security peripherals. Given the need for continuous security, the Security contractor shall provide a complete cut-over/renewal schedule, which shall clearly identify all security peripheral testing, transitioning and additions.

B. The existing ACMS shall remain operational during the Work being conducted.

C. Install all system components including Owner furnished equipment, and appurtenances in accordance with the manufacturer's instructions. Provide all necessary connectors, terminators, interconnections, services, and adjustments required for a complete and operable system.

D. Visit the site and verify that site conditions are in agreement with the design package. Report all changes to the site or conditions that will affect performance of the system to the Owner in a report as defined in “Technical Data Package II”. The Contractor shall not take any corrective action without written permission from the Owner.

E. The Contractor shall perform a field survey, and provide a report to the Owner as part of the site survey report as defined in the Technical Data Package II. The Contractor shall be held responsible for repair costs due to Contractor neglect or abuse of Owner equipment.

F. Verify that all surfaces and areas are ready to receive work.

G. Verify field measurements as shown on drawings and as instructed by manufacturer.

H. Verify that required utilities are available, in proper location, and ready for use.

3.2 INSTALLATION

A. Enclosure Penetrations: All enclosure penetrations shall be from the bottom unless the system design requires penetrations from other directions. Penetrations of interior enclosures involving transitions of conduit from interior to exterior, and all penetrations on exterior enclosures shall be sealed with rubber silicone sealant to preclude the entry of water. The conduit riser shall terminate in a hot-dipped galvanized metal cable terminator. The terminator shall be filled with an approved sealant as recommended by the cable manufacturer and in such a manner that the cable is not damaged.

B. Install the security systems related equipment as specified by the manufacturer and as shown on the Construction Drawings, provide mounting hardware sized appropriately to secure each device for conditions encountered at the site; connect signal lines and AC power to equipment interfaces, where required.

C. The Contractor shall provide mounting details for all new equipment as part of the shop drawing submittal.

D. Install system in accordance with manufacturer's recommendations. This includes, but is not limited to the following:
   1. Wiring within racks shall be routed horizontally and vertically in neatly tied bundles.
   2. Cable bundles shall cross from one rack to the next at the top, center, or bottom only, leaving sufficient working room within the rack.
   3. Wiring shall be tie-wrapped so that all connectors in a bundle can be removed and re-installed without the possibility of cross connecting.
   4. Where wiring is routed through sheet metal or over frame members, the metal edges shall be covered with flexible grommet or edge dressing (such as automobile door edge trim).
   5. Double-sided foam tape shall not be used to secure any terminal boxes, relay bases or circuit boards, etc. All device mounting shall be of a permanent nature.
   6. All excess length AC cords are to be tie-wrapped out of the way, and new plugs installed.
   7. All cable shall be in conduit, present a professional appearance, and maintain the aesthetics of the installation area.
   8. Care shall be exercised at all times to protect Owner's property. For example, ladders shall not be placed against wallpapered or finished surfaces, equipment or furnishings; desks or countertops shall not be used in lieu of ladders.

E. Provide all panel wiring required, including temporary wiring. Install wiring in accordance with NEC and NFPA regulations (as applicable), local building codes and ordinances, and all Owner wiring standards. Contractor shall be responsible for obtaining and adhering to applicable regulations, codes, ordinances, and standards.

F. Label conductors at each end with legible, write-on type, self-laminating vinyl labels.

G. Ensure that:
   1. All applicable statutes, ordinances, regulations, license requirements and codes are fully complied with.
   2. All required permits are obtained. The Contractor will be responsible for any associated permit fees.
   3. All required inspections are conducted.
   4. All necessary certificates are issued, obtained, and delivered to the Owner.
   5. All equipment installations and mounting are in strict accordance with requirements for applicable seismic classification.

H. Arrange all components to be mounted in the rack(s), or on a wall in accordance with Owner coordination. Design shall provide a neat appearance and accessibility for servicing equipment.

I. Perform complete programming of the system in coordination with the Owner.

3.3 LIGHTNING AND POWER SURGES

A. Control Line Surge Protection: Cables and conductors, except fiber optic cables, which serve as communication, control, or signal lines shall be protected against surges and shall have surge protection installed at each end. Protection shall be provided at the equipment. In addition, triple electrode gas surge protectors rated for the application on each wireline circuit shall be installed within three (3) feet of the building cable entrance. Fuses shall not be used for surge suppression.

3.4 ON-SITE SPARE PARTS

1. The Contractor, shall on-site, provide additional spare parts for all major security peripherals, which includes, but is not limited to:
   a. ACP panel communication equipment
   b. Lenel dual controllers, two input-card reader modules, door contacts, request-to-exit devices

c. Other lead items to support fast restoration of ACMS equipment.

2. The quantity of each spare part provided shall be 10% of the total quantity each installed device or peripheral.

3.5 CABLE LABELING & CHARTS

1. The Contractor shall generate all labeling (no labels will be provided by the Owner). Samples of all proposed labeling will be submitted for review and approval by the owner.
2. Labels shall be developed and printed using a software program.
3. Software program and all inputs shall be turned over to the Owner at the end of the project.
4. All label material shall be:
   a. Vinyl cloth for Pathway Labeling.
   b. Semi-Rigid Polyester/Polycarbonate or Self-Laminating Vinyl for Cable Labeling.
   c. Polyolefin for Termination Hardware.
5. All labels shall have an adhesive backing for permanent attachment.
6. All labels shall be of sufficient size.
7. All labels materials shall pass all hazardous environment legibility and adhesion requirements of UL969.
8. Labeling practices for all infrastructure elements shall be consistent across the entire installation.
9. Elements shall be labeled in ways that are easy to see.

B. Installation
   1. All labels shall be installed straight.
   2. Install labels at locations as follows:
      a. Port at rear of panel.
      b. Front inside of panel.
      c. Individual cables at the rear of termination point.
      d. Riser cables whenever exposed on minimum 10' intervals.
      e. Riser cable at point of termination.
      f. Ends of any coiled or spare cable put in place that is not terminated.
      g. On front of racks, cabinets, and frames.

C. Label Holders
   1. Labels attached to riser cable bundles shall be installed on a label holder of sufficient size. Label holder to be self-laminating and have tie- wrapping provisions.

D. Temporary Labels
   1. Vinyl labels, hand written, with permanent marker.

E. Charts
   1. Provide printed charts containing cross-connect information. The chart shall contain Device No., Panel No., Termination No., and Cable No. Charts to be computer generated. File information shall be turned over to Owner in an ASCII format prior to owner acceptance.

F. Color Coding
   1. In addition to the requirements for marking or labeling infrastructure elements, with relevant information, color coding these marks or labels shall be as follows:
      a. Termination labels identifying the two ends of the same cable shall be of the same color.
      b. Cross-connections are generally made between termination fields (groups of termination labels) of two different colors.

G. Temporary Labels
   1. Provide temporary labels on all outlet cable as it is roughed-in.

H. Text Size and Information
   1. Text size should be as large and as bold as possible.
   2. Exact text required, information is shown on the drawings.
   3. All riser cables labels shall contain:

a. Designation number.
b. "To" and "From" information.
c. Room numbers.
d. Floor numbers.

3.6 START-UP AND TESTING

A. Manufacturer's technical representative shall start-up, test, and set all parameters as directed by the system integrator. Manufacturer's technical representative shall demonstrate compliance with all requirements herein. All damaged or malfunctioning devices shall be replaced.

B. Contractor shall test, warranty and replace any defective field equipment in accordance with the security drawings and specifications as part of their work.

3.7 CABLE TESTING

A. All cables and termination hardware shall be 100% tested for defects in the installation and the materials used in order to verify performance under installed conditions. All conductors of each installed cable and system component shall be verified usable by the Contractor.

B. System Acceptance
1. Prior to system acceptance, any defect in the installation of the security system shall be repaired or replaced. This shall include, but is not limited to the following:
a. Raceways.
b. Routing.
c. Terminations.
d. Cable:
e. Connectors.
f. Jacks.
g. Wire management panels.
h. Connector blocks.

C. Cable Testing
1. All cables shall be tested in accordance with this document, and the best industry standard practices. If any of these are in conflict, the Contractor shall be responsible to bring any discrepancies to the attention of the Owner for clarification and/or resolution.
a. All cables shall be tested for acceptable signal strength and passage.
b. All test results shall be well documented and the documentation given to the Owner for proper distribution.
c. Cross-connections and testing of the entire channel with the cross-connections in place shall be the responsibility of the owner.

D. Summary
1. The following systems or cabling shall be tested after the installation is fully completed:
a. Security Cable from termination to termination.
b. The system shall be fully tested and certified prior to the owner acceptance.

E. Test Unit
1. The copper cabling system shall be tested by using an approved test unit capable of performing the required tests.

3.8 SYSTEM STARTUP

A. Do not apply power to the security system until the following items have been completed:
1. Security systems described herein shall be set up in accordance with manufacturer's instructions.
2. A visual inspection of the security systems has been conducted to ensure that defective equipment items have not been installed and that there are no loose connections.
3. System wiring has been tested and verified as correctly connected as indicated.

4. All system grounding and transient protection systems have been verified as properly installed and connected.
5. Power supplies to be connected to the security systems have been verified as the correct voltage, phasing, and frequency as indicated.
6. Satisfaction of the above requirements shall not relieve the Contractor of responsibility for incorrect installation, defective equipment items, or collateral damage as a result of Contractor work/equipment.

3.9 FIELD QUALITY CONTROL

A. The Contractor shall provide all personnel, equipment, instrumentation, and supplies necessary to perform all site testing. The Owner will witness all performance verification. Written permission shall be obtained from the Owner before proceeding with the next phase of testing. Original copies of all data produced during performance verification shall be turned over to the Owner at the conclusion of each phase of testing prior to Owner approval of the test.

B. The Contractor shall calibrate and test all equipment described herein and place the systems in service, and test the overall system. The Contractor shall deliver a report describing results of functional tests, diagnostics, and calibrations including written certification to the Owner that the installed complete system has been calibrated, tested, and are ready to begin performance verification testing. The report shall also include a copy of the approved performance verification test procedure.
   a. If any conditions or other conditions exist that cause degradation or interfere with any security device, the Contractor shall inform the Owner.
   b. The field testing shall as a minimum include:
      1) Verification that the any signal or control cabling have been installed, tested, and approved as specified.
         a) When the system includes remote control/monitoring stations or remote panels, verification that the remote devices are functional, and are in communicating with the representative head-end equipment shall be provided
         b) Verification that all system devices are fully functional and that applicable software has been programmed as required for the site configuration.
         c) Operation of all electrical and mechanical controls and verification that the control performs the designed function.
         d) Verification that all cables are terminated properly.
      2) Deliver a report describing results of functional tests, diagnostics, and calibrations including written certification to the Owner that the installed complete system has been calibrated, tested, and is ready to begin performance verification testing. The report shall also include a copy of the approved performance verification test procedure.

C. Performance Verification Test
   1. Demonstrate that the completed security system(s) comply with the contract requirements. Using approved test procedures, all physical and functional requirements of the project shall be demonstrated and shown. The performance verification test, as specified, shall not be started until receipt by the Contractor of written permission from the Owner, based on the Contractor's written report. This shall include certification of successful completion of Contractor Field Testing as specified herein and upon successful completion of training as specified. The Owner may terminate testing at any time when the system fails to perform as specified. Upon termination of testing by the Owner or by the Contractor, the Contractor shall submit a report outlining the required repairs to the Owner. The Contractor shall commence system repairs upon direction by the Owner. Upon successful completion of the performance verification test, the Contractor shall deliver test reports and other documentation as specified to the Owner.

3.10 CLEANING AND ADJUSTING

A. Clean installed items using methods and materials recommended by manufacturer.

3.11 DEMONSTRATION AND ACCEPTANCE

A. Conduct post-performance verification test inspection with Owner appointed representative, and Owner to ensure that punch list items have been remedied and that systems are functioning as designed. Where upon the Owner shall verify the system for acceptance.

3.12 TRAINING

A. On-site training shall be supplied as part of the Contractors work. Specifically, a Lenel Certified individual familiar with the systems provided and related subsystems as specified herein shall conduct the training.

B. Training shall provide information regarding the operation of the systems, diagnostics, as well as any other aspects required to provide a knowledge base to manage the security management system being provided.

C. VMS System Training shall be provided prior to system turnover and shall include a minimum of twenty-four (24) hours of training, which may be altered at the Owner at any time.

D. Security System Operator Training:
   1. A minimum of forty (40) hours of training, which may be altered by the Owner at any time. Training shall consist of the following:
      a. The Contractor shall coordinate three (3) separate training sessions at least two weeks (2) prior to system turnover for a class no more than four (4) people. Classes shall be coordinated to include all shifts for all operators. Classes, if required, shall be split up to accommodate the Owner schedule.
      b. Session 1 through 2 shall be orientated towards familiarizing operators with basic commands.
      c. Session 2 through 3 shall be an all day session dedicated to the administration of the overall security system, which shall include, but not limited to replacing system diagnostics, troubleshooting configurations and any other item necessary to conduct the administration of the overall security system.
      d. Session 4 shall be performed one week prior to system turnover and shall be an all day session that shall cover administration and basic operator training as described in Session 1 through 3.
      e. Session 5 shall be the last and final training and shall be an all day session that shall be recap all administration, basic operator commands and shall be completed at a time to be coordinated with the Owner.

3.13 ON-SITE ASSISTANCE

A. Occupancy Adjustments: When requested by Owner within one year of date of Owner sign off/acceptance, provide on-site assistance in tuning and adjusting the system to suit actual occupied conditions and to optimize performance. Provide up to twenty-four (24) hours of time by a qualified technician, on site, for adjustments of the system without additional cost.

3.14 SCHEDULES

A. See drawings for location. (Drawings are to be utilized as a guide, actual locations may vary).

B. Verify that all surfaces and areas are ready to receive work.

C. Verify field measurements as shown on drawings and as instructed by manufacturer.

D. Verify that required utilities are available, in proper location, and ready for use.

PART 4 - MEASUREMENT AND PAYMENT

A. Refer to Section 01 22 00, Part 4, regarding measure and payment.

B. Work of this Section is considered incidental to work under other payment items and no separate measurement and payment will be made to the Contractor for Work of this Section. Work of this section shall include furnishing all labor, materials, tools, equipment, supplies, supervision, and incidentals necessary as described by the Contract Documents.

END OF SECTION

This page intentionally left blank.

SECTION 28 23 00

VIDEO SURVEILLANCE SYSTEM

PART 1 - GENERAL

1.01 SUMMARY

A. This Section consists of descriptions and details of the materials and equipment necessary and incidental to furnishing, constructing and commissioning the video surveillance system at the locations indicated on the contract plans and directed by OMNITRANS. The following equipment is covered under this specification: Fixed wide dynamic range (WDR) IP Cameras, camera mounts and cameras licenses for existing Video monitoring system (VMS).

B. Additionally, conduit paths for both electrical and communications are detailed in the electrical drawings. It shall be the responsibility of the Video Surveillance contractor to verify conduit paths and install as needed.

1.02 RELATED SECTIONS

A. Section 01 33 00 - Submittal Procedures.

B. Section 01 91 13 - General Commissioning Requirements.

C. Section 29 10 40 – Raceways and Boxes.

1.03 CODES, STANDARDS AND REFERENCES

A. ANSI/EIA/TIA 568 B.3: Commercial Building Telecommunications Wiring Standard, current edition.

B. ANSI/EIA/TIA 569: Commercial Building Standard for Telecommunications Pathways and Spaces, current edition.

C. ANSI/EIA/TIA 606: The Administration Standard for the Telecommunications Infrastructure of Commercial Buildings, current edition.

D. Cal OSHA: California Occupational Safety and Health Administration Regulations.

E. CBC: California Building Code.

F. CEC: California Electric Code, (NEC with California amendments).

G. EIA - Electronics Industries Association.

H. IEEE C2: National Electrical Safety Code.

I. IEEE 802.3AF: Power Over Ethernet (12.95 W)

J. IEEE 802.3AT: Power Over Ethernet Enhanced (25.5 W)

K. IP66: International Protection Rating for Enclosures

L. TIA - Telecommunications Industry Association – TIA-568 Series.

M. Underwriters Laboratories – UL 444: Standard for Communications Cables.

N. Underwriters Laboratories – UL 1479: Standard for Safety Fire Tests of Through-Penetration.

O. Underwriters Laboratories – UL 1863: Standard for Communications-Circuit Accessories.

1.04 SUBMITTALS

A. Refer to Section 01 33 00 - Submittal Procedures.

B. Submit the following:

a. Systems design presented in functional block diagrams and system signal flow diagrams indicating optimal signal levels.

b. Product verification list with pictorial view and full performance specifications.

c. Detailed installation drawings to include all installation configuration and methods of installation for all equipment.

d. List of proposed camera models and manufacturers for all camera installations and calculations of focal length and coverage shall be provided for each camera type.

e. Provide list of proposed mounts for all cameras, enclosures and converters. Include mounting detail for each different mount and mounting surface.

f. Operation and maintenance data to include operation instructions, detailed equipment list, cable and wire lists, maintenance, alignment, troubleshooting procedures and printed equipment manuals.

1.05 QUALITY ASSURANCE

A. Products shall be manufactured by firms regularly engaged in manufacturing products described in this Section.

B. Field testing shall be performed by persons having three or more years of relevant testing experience.

1.06 WARRANTY

A. Refer to Section 01 78 36 - Warranties and Guarantees.

B. All warranties and manufacturer's guarantees shall name OMNITRANS as the beneficiary. For equipment, products, or components bearing a manufacturer's warranty and guarantee that extends for a period of time beyond the Contractor's warranty and guarantee, so state in the warranty or guarantee.

C. Disclaimers and Limitations: Manufacturer's disclaimers and limitations on product warranties shall not relieve the Contractor of warranty on the Work that incorporates the products, nor shall they relieve suppliers, manufacturers, and installers required to countersign special warranties with the Contractor.

D. Related Damages and Losses: When correcting warranted Work that has been found defective, remove and replace other Work that has been damaged as a result of such defect or that must be removed and replaced to provide access for correction of the warranted Work.

E. Reinstatement of Warranty: When Work covered by a warranty has been found defective and has been corrected by replacement or rebuilding, reinstate the warranty by written endorsement. The reinstated warranty shall be equal to the original warranty, with an equitable adjustment for depreciation.

F. Replacement Cost: Upon determination that Work covered by a warranty has been found to be defective, replace or reconstruct the Work to a condition acceptable to OMNITRANS, complying with applicable requirements of the Contract Documents. The Contractor shall be responsible for all costs for replacing or reconstructing defective Work, regardless of whether OMNITRANS has benefited from use of the Work through a portion of its anticipated useful service life.

G. Authority Recourse: Written warranties made to OMNITRANS are in addition to implied warranties and shall not limit the duties, obligations, rights, and remedies otherwise available under law; nor shall warranty periods be interpreted as limitations on time in which OMNITRANS can enforce such other duties, obligation, rights, or remedies.

H. Rejection of Warranties: OMNITRANS reserves the right to reject warranties and disallow the use of products with warranties in conflict with Contract Document requirements.

I. Warranty as Condition of Acceptance: OMNITRANS reserves the right to refuse to accept Work for the Project where a special warranty, certification, or similar commitment is required until evidence is presented that those required to counter-sign such commitments are willing to do so.

1.07 SYSTEM DESCRIPTION

A. Furnish two (2) Fixed IP cameras in a generator enclosure for surveillance of the interior of the enclosure at the San Bernardino Transit Center OmniTrans facility.

B. Contractor shall be aware of existing video surveillance system and the integration that shall be required.

C. Drawings and layouts depict typical layout in the generator enclosure within the project. Wiring details shall show how the cameras should be installed. The drawings provide mounting details and field of view (FOV) layouts.

1.08 DEFINITIONS

A. SBTC: San Bernardino Transit Center

B. DNS: Domain Name System

C. DHCP: Dynamic Host Configuration Protocol

D. IP: Internet Protocol

E. UI: User Interface

F. PoE: Power Over Ethernet

G. LAN: Local Area Network

H. FPS: Frames per second

I. NVR: Networked Video Recorder

J. VMS: Video Management System

K. TOD: Transit Oriented Development

L. FOV: Field of View

M. ROI: Regions of Interest

N. RTSP: Real-Time Streaming Protocol

PART 2 - PRODUCTS

2.01 GENERAL

A. Contractor Qualifications:

a. The Contractor shall have a minimum of three years' experience in the installation of IP camera and cable systems of similar complexity as specified herein.

b. The Contractor shall have installed the specified products in at least three projects of the type and complexity specified herein.

c. The Contractor shall ensure compliance with and have a thorough understanding of all local codes and contract conditions pertaining to the project.

d. The Contractor shall have local in-house engineering and project management capabilities consistent with the requirements of the project.

e. The Contractor shall be manufacturer certified or at a minimum hire a sub-contractor that is manufacturer certified.

B. Product Standards:

a. Materials shall be new and shall fully comply with the latest published specifications and versions of the manufacturer.

b. Equipment, components and materials provided by the Contractor shall meet or exceed the performance characteristics and technical requirement for referenced components.

c. The Contractor shall provide complete and detailed technical information for materials. OMNITRANS or its representatives will reject proposed materials in the event that submitted technical information is not sufficient to readily confirm that proposed materials will meet or exceed the performance and technical requirement. OMNITRANS or its representatives shall make the final decision as to whether proposed materials are acceptable. In no case shall acceptance by OMNITRANS or its representatives of proposed materials relieve the Contractor of his/her responsibility to produce completed systems, which comply with this Section.

d. Within the technical requirements, certain manufacturers may be specified. Substitutions shall meet or exceed the minimum functional and technical requirements. Acceptance of such substitutions is at the discretion of the OMNITRANS or its representatives.

C. Project Location:

a. San Bernardino Transit Center, San Bernardino, CA

D. Camera Location Area:

a. SBTC/OmniTrans Generator Enclosure

E. Functional Requirements:

General:

a. Provide IP-based Fixed WDR cameras at the SBTC described above.

b. Video shall be recorded in H.264 format.

c. The recording and storing of video images at the OmniTrans Bus Facility shall be integrated to the existing VMS..

d. OMNITRANS security personnel at SBTC will have operational control of OMNITRANS based video surveillance software.

e. H.264-formatted video will be recorded and stored at fifteen frames per second (15fps) in the storage area on the video surveillance server at each location. Stored video is limited to the most recent thirty (30) days.

f. All incidents that shall be recorded through the Video Surveillance system will be capable of saving on a DVD and stored for a minimum of five (5) years.

F. Equipment Requirements:

General:

a. IP-based cameras shall provide the same functions and have the same type and model supplied by approved manufacturers.

b. All necessary accessories, devices, wires, hardware, and cables shall be furnished for proper interconnection and mounting of the equipment specified herein to provide a completely integrated and operational IP-based camera system.

Cameras:

c. All outside cameras shall have weather proof enclosures.

Camera Lenses:

d. Lenses shall be P-iris lenses.

e. Cameras shall have remote digital zoom and focus capabilities.

Camera Housings:

f. Cameras installed outdoors shall have environmental housings. The housings shall be equipped with fan kit, and power supply and be IP66 rated at a minimum.

g. Housings exposed to direct sunlight at any time of day shall be equipped with a sun shield.

h. All camera housing and mounts colors shall be coordinated with the Architect. Note: painting such devices will void manufacturer warranty.

i. Camera monitoring equipment shall use domed security housing with the following characteristics:

1) The enclosure shall be tamper-proof to prevent the general public from accessing the interior of the enclosure. Tamper-proof design is subject to OMNITRANS approval.

Camera Mountings:

j. Wall:

1) For fixed domed cameras mounting unit shall be designed to support loads of up to 25 LBS. Each mount assembly shall be equipped with an adjustable head adapter that shall allow 360 degree horizontal and +90 degree vertical plane adjustment.

Video Monitoring Servers:

k. Video monitoring servers are existing and required to run the software to process camera video for storage, perform analytics or interface with 3rd party video analytics, allow users to select and control cameras, and provide per user video feeds.

l. The contractor shall verify the existing video monitoring servers for storage capacity to handle two additional cameras.

m. Sufficient storage for 30 days of all video stored at an average of 15fps.

Control Panel:

n. Cameras shall be controlled through the video manager software.

o. Wires and cables between equipment assemblies and termination points within each equipment enclosure shall be listed as being resistant to the spread of fire in accordance with the NEC, and shall be rated at 300 volts, minimum. Wires and cables servicing remote camera units shall be provided in conduit or raceways.

2.02 CONNECTORS, CABLES AND PATHWAYS

A. Cable types:

CAT 6 Cable:

a. The ANSI/TIA/EIA standard for Category 6 (CAT6) cable is TIA/EIA 568-5-B.2-10.

b. The maximum length for a cable segment is 100 meters (328 FT). If longer runs are required, the use of active hardware such as a repeater, or a switch, is necessary.

c. CAT 6 – Belden 2413

B. Connector types:

RJ 45:

a. Registered Jack-45, an eight-wire connector used commonly to connect computers onto networks.

b. Contractor shall use EZ-RJ style connectors with strain relief. LC:

C. Pathways and Raceways:

a. Pathways and raceways are shown in the Electrical drawings to provide cable and power conduit pathways for equipment included for the Video Surveillance system.

b. Contractor shall verify pathway and calculate lengths.

2.03 GENERAL IP CAMERA REQUIREMENTS

A. Cameras installed outdoors shall be furnished with environmental housings. Housings exposed to direct sunlight at any time of day shall be equipped with a sun shield.

B. Cameras shall use security housing with the following characteristics:

a. The enclosure shall be tamper-proof with tamper-proof design subject to OMNITRANS approval.

b. Enclosure shall be rated IP66 at a minimum.

2.04 FIXED IP CAMERA REQUIREMENTS

A. General:

a. The Fixed camera (Arecont AV2256PM or approved equal) shall be a Full HD network camera supporting H.264,

b. The camera shall utilize a high sensitivity 3 Megapixel CMOS sensor with 1/3.2" optical format.

c. The camera's power source shall be Power over Ethernet (PoE) complying with the IEEE 802.3af standard and provide at least 10.1 W of power max.

d. The camera shall have a 3-axis gimbal with 360˚ pan, 90˚ tilt and 180˚ Z-rotation for easy and accurate positioning

e. The camera shall be surface mount with wall mount with cap (MD-WMT2).

f. The camera shall have dual standard compression support with simultaneous streaming of both H.264 and MJPEG formats.

g. The camera shall output at a maximum resolution of 1920(H) x 1080(V) pixels at a maximum frame rate of 30 frames per second (FPS).

h. It shall be possible to program the camera to output a variety of lower resolution images, i.e. 1280(H) x 1024(V) pixels at 41 FPS.

i. The camera's shutter speed shall be 1ms - 500ms.

j. The camera shall feature streaming of the full field of view (FOV) and simultaneous multiple regions of interest (ROI) for forensic zooming.

k. The camera shall support, at a minimum, network protocols;

1) HTTP1.0

2) HTTP1.1

3) RTSP

4) RTP over TCP

5) RTP over UDP

6) TFTP

B. Camera Lens:

a. The Fixed camera shall have an integrated 3-9mm, Φ14mm Mount, megapixel corrected vari-focal lens with F1.2 P-Iris lens and horizontal field of view of 82°-27°

b. The camera shall support a minimum illumination of 0.3 Lux @ F1.2 in color non-binning mode and 0.15 Lux @ F1.2 in color binning mode.

C. Video-Electrical:

a. The camera's primary power source shall be Power over Ethernet (PoE) complying with the IEEE 802.3af standard.

b. The camera shall be Class 3 PoE and have 10.1 watts max DC power consumption Environmental:

c. The camera's operating ambient temperature shall be -20˚C (-4°F) to +50ºC (122ºF), stable image temperature is 0˚C (32 °F) to +50˚C (122°F); storage temperature -40˚C (-40°F) to +60˚C (140 °F) at the humidity 0% to 90% (non-condensing)

2.05 CAMERA LICENSING SOFTWARE:

1) The contractor shall provide proper licensing for two (2) additional cameras.

2) The contractor shall verify with OMNITRANS the exact type of licensing needed for the Video Monitoring System,

PART 3 - EXECUTION

3.01 INSTALLATION

A. Cameras shall be mounted in the location as shown in the contract drawings.

B. Cameras shall be located so that their Field of View (FOV) is not restricted by other installations such as walls, ceilings, columns, signs, and luminaries. Plans demonstrating the unobstructed FOV of each camera shall be submitted for OMNITRANS review.

C. Cameras shall be located so that they never directly view the sun. The FOV of cameras shall be adequately illuminated either by natural light or by luminaries. Within the FOV, particular care shall be taken to avoid extremes of light and shadow.

D. Wall Mounts for fixed WDR camera shall be designed to support loads of 25 pounds minimum.

3.02 TESTING

A. Field testing shall be performed in accordance with Contract Specification Section 01 91 13 - General Commissioning Requirements.

B. Field Tests: Perform camera cable tests as indicated following the approved test plan. Furnish all equipment, appliances, and labor necessary to test the installed camera cable between the camera and the switch, between the switch to the server and from the server to the client workstation and multi-viewer.

   a. Perform a continuity test on the camera cables. Camera cable shall not exhibit any discontinuities such as opens, shorts, crimps, or defects.

   b. Perform continuity tests on the CAT6 camera cables using a meter having a minimum input resistance of 20,000 ohms per volt. Show that each conductor has a resistance of not more than 16 ohms per 1000 FT of conductor run.

   c. Perform all continuity testing after final termination and cable installation, but prior to connection of any electronics or field devices.

   d. Replace any cable that fails to meet the parameters, or if any testing reveals defects in the cable. Retest new cable as specified above.

   e. Contractor is to furnish their own test equipment. No monetary compensation will be reimbursed to contractor if proper tools need to be purchased or rented.

   f. Furnish all test results to OMNITRANS.

C. Perform the following local field operations tests on site in accordance with the OMNITRANS approved field test plan. Demonstrate the following after the camera controller assemblies, other camera hardware and connecting cabling have been installed:

a. Verify physical construction has been completed in accordance with the plans and Specifications.

b. Inspect quality and tightness of ground and surge protector connections.

c. Check power supply voltages and output.

d. Connect devices to power source.

e. Verify installation of specified cables and connections between camera, pan/tilt unit, and camera control receiver.

3.03 COMMISSIONING

A. Commissioning is the process by which the Video Surveillance Contractor will demonstrate to OMNITRANS that it has completed the project in conformance with the contract documents and that the project will perform as specified in the contract documents. The Video Surveillance Contractor shall be manufacturer certified and solely responsible for providing all test and commissioning equipment, tools, software, programming, programming support and incidentals and qualified technicians to start–up, calibrate, debug and verify proper function of the systems and sub-systems as required by the Commissioning Plan.

B. The responsibilities of the Video Surveillance Contractor during commissioning shall be to assign representatives with expertise and authority to act on its behalf, and shall schedule them to participate in and perform commissioning process activities including, but not limited to, the following:

a. Evaluate performance deficiencies identified in test reports and, in collaboration with the entity responsible for system and equipment installation, recommend corrective action.

b. Resolve issues recorded in the test reports.

c. Organize and lead the Video Surveillance commissioning team and coordinate commissioning process activities with the construction schedule.

d. Review and accept checklists provided by the construction manager and or OMNITRANS . Complete checklists as work is completed, and provide them to the construction manager and or OMNITRANS on a daily basis.

e. Complete commissioning process test procedures including specific construction checklists and commissioning process test procedures.

f. Contractor shall witness systems, assemblies, equipment, and component start-up. Compile test data, inspection reports, and certificates; include them in the printed systems manual and commissioning process report.

PART 4 - MEASUREMENT AND PAYMENT

A. Refer to Section 01 22 00, Part 4, regarding measure and payment.

B. Work of this Section is considered incidental to work under other payment items and no separate measurement and payment will be made to the Contractor for Work of this Section. Work of this section shall include furnishing all labor, materials, tools, equipment, supplies, supervision, and incidentals necessary as described by the Contract Documents.

END OF SECTION

SECTION 31 11 00
SITE PREPARATION

PART 1 - GENERAL

1.1 SUMMARY

A. Section Includes:
   1. Site clearing and grubbing of trees, stumps, undergrowth, brush, trash, grass, weeds, roots, rubbish, refuse, or other debris, modifying irrigation systems, stripping of topsoil and protecting trees within the limits of excavation, embankment, borrow, and other areas as shown on the Contract Plans or required to perform the Work of this Contract.

B. Related Specification Sections include but are not necessarily limited to:
   1. Division 01 - General Requirements.
   2. Section 31 11 50 - Demolition, Cutting, and Patching.

1.2 SUBMITTALS

A. General:
   1. Submittals shall be made in accordance with Division 01 requirements.

B. Site Clearing Plan:
   1. A site clearing plan must be prepared by the Contractor and submitted to the Engineer for acceptance prior to commencing work. The site clearing plan shall include:
      a. Location and limits of clearing and grubbing.
      b. Methods for protection of areas of vegetation designated as “no construction zones” and trees noted in plans to be saved.
      c. Methods to be employed and equipment to be used.
      d. Safety measures including signs, barriers, temporary walkways and hand railing.
      e. Haul routes and disposal sites.
      f. Permits for transport of materials off the Work Site where applicable and other permits as required by local agencies, project environmental documents and the project Plans.

C. Permits, Notices, Certifications and Authorizations:
   1. The following permits, notices, certifications and authorizations shall be obtained with copies submitted by the Contractor to SANBAG:
      a. Delivery manifests for disposed materials in accordance with site clearing plan and permit conditions in accordance with Division 01 requirements.
      b. Private property owner’s release for material removed and deposited on private property in accordance with Division 01 requirements.
         1) Releases shall absolve SANBAG and its member agencies from any responsibility in connection with the disposal of materials on private property.
         2) Releases shall be signed by the owner(s) of the property on which the material will be deposited.
         3) Two copies of the releases must be submitted to the Engineer for approval not more than 15 days before the start of material being deposited on private property.
      c. Disposal Certification for materials removed from Job Site indicating they have been disposed of in accordance with applicable laws and regulations in accordance with Division 01 requirements.

1.3 ENVIRONMENTAL CONDITIONS

A. On site burning or burial of site clearing materials will not be allowed.

B. The Contractor must take possession of material and debris collected from site clearing procedures and shall be responsible for disposing of them in accordance with these Specifications, any project permits, and applicable laws and regulations in accordance with Division 01 requirements.

C. Contractor shall provide noise abatement in accordance with Division 01 requirements.

D. Site cleanliness, sweeping and dust control shall be in accordance with Division 01 requirements.

PART 2 - PRODUCTS - (NOT APPLICABLE TO THIS SECTION)

PART 3 - EXECUTION

3.1 PREPARATION

A. Protect existing trees, other vegetation, and existing site improvements on SANBAG or adjacent property that are to remain.
   1. Do not smother trees by stockpiling construction materials or excavated materials within drip line.
   2. Avoid foot or vehicular traffic or parking of vehicles within drip line of trees or shrubs.
   3. Provide barricades, coverings, temporary fencing, or other types of temporary protection as required by the Project environmental documents or the Engineer in accordance with the Plans and these Specifications.

B. Repair or replace trees, vegetation, and existing site improvements including modifying irrigation systems that are to remain that are damaged by construction operations.
   1. Repair of damaged trees and shrubs to be performed by a certified arborist or tree surgeon.
   2. Remove trees that are damaged to the extent that a certified arborist or tree surgeon determines cannot be repaired and restored to full-growth status.
      a. Replace with new trees of minimum 4 IN caliper.
   3. Damaged vegetation shall be replaced in-kind as approved by the Engineer.
   4. Existing site improvements will be repaired or replaced as approved by the Engineer.
   5. Irrigation systems shall be modified as shown in the Plans.

C. SANBAG will obtain authority for removal and alteration work, as required by the Plans, on adjoining property prior to Contractor starting work.

D. Within the limits of clearing, all stumps, roots, root mats, logs, debris and other objectionable material shall be removed as follows:
   1. Grubbing shall extend to the outside excavation and fill slope lines except where tops of slopes are to be rounded. In these locations, the areas shall extend to the outside limits of slope rounding.
   2. Grub where subdrainage trenches will be dug, unsuitable material removed, or structures built.
   3. Grub areas in which hillsides or existing embankments will be terraced.
   4. Grub areas upon which embankments, foundations or other structures will be placed.
      a. Areas beneath embankments greater than 3 FT in depth shall be free from all vegetation and roots to a depth of 6 IN below the ground surface (after topsoil has been removed).
      b. For embankments 3 FT in depth or less, roots that are over 2 IN DIA shall be removed to a depth of 1 foot below ground surface.

3.2 CLEAN-UP

A. Remove and dispose of barricades, coverings or other protections used to prevent damage to existing vegetation or improvements upon clean-up of the Work.

3.3 SCHEDULE

A. Contractor must complete clearing and grubbing work far enough in advance of other operations to permit the placement of construction stakes. Construction schedule shall be adjusted so cleared areas are not left susceptible to erosion or sediment runoff due to weather.

3.4 ACCEPTANCE

A. Upon completion of the site clearing, obtain Engineer's written acceptance of the extent of clearing, depth of stripping, and removal of deleterious material.

PART 4 - MEASUREMENT AND PAYMENT

A. Refer to Section 01 22 00, Part 4, regarding measure and payment.

B. Work of this Section is considered incidental to work under other payment items and no separate measurement and payment will be made to the Contractor for Work of this Section. Work of this section shall include furnishing all labor, materials, tools, equipment, supplies, supervision, and incidentals necessary as described by the Contract Documents.

END OF SECTION

This page intentionally left blank.

SECTION 31 11 50
DEMOLITION, CUTTING AND PATCHING

PART 1 - GENERAL

1.1 SUMMARY

A. Section Includes but is not limited to:
   1. Demolition, removal and disposal, salvage, cutting and patching of existing construction, surface or subsurface, where shown on Plans, or as required to accommodate new work shown or specified; including backfilling of excavations and depressions to restore the Work Site to final grade.
   2. Demolition, removal and disposal of existing Reinforced Concrete Pipe (RCP), Portland Cement Concrete Pavement (PCCP), Asphalt Concrete Pavement (ACP), Polyvinyl Chloride Pipe (PVC), Corrugated Metal Pipe (CMP) storm drain where shown on Plans, and other related manmade features or as required to accommodate new work shown.
   3. Demolition, removal and disposal of existing Under Drain (UD) pipe and UD cleanouts where shown on Plans, or as required to accommodate new work shown.
   4. Demolition, removal and disposal of existing storm drain manholes, inlets and headwalls where shown on Plans, or as required to accommodate new work shown.
   5. Saw cut of existing concrete pavement, existing Asphalt Concrete / HMA pavement at the locations shown on the Contract Plans or as required to perform the Work of this Contract.
   6. Removal of existing HMA pavement and Aggregate Base (AB) Material at the locations shown on the Contract Plans or as required to perform the Work of this Contract.
   7. See 31 12 00 HMA Paving for Cold Milling of existing asphalt paving.
   8. Removal and disposal of existing chain link fence as shown on the contract plans or required to perform the Work of this Contract.
   9. Removal and salvage of existing wrought iron fencing regardless of location or use as shown on the contract plans. To be reinstalled per 32 31 19.
   10. Demolition and removal of existing minor structures (bollards, planter, manholes, storm drain inlets, headwalls) as shown on the Contract Plans or required to perform the Work of this Contract.
   11. Removal and disposal of existing pavement markings and markers as shown on the Contract plans or required to perform the Work of the Contract.

B. Related Specification Sections include but are not necessarily limited to:
   1. Division 01 - General Requirements.
   2. Section 31 11 00 - Site Preparation.
   3. Section 31 22 00 – Site Excavation

1.2 SUBMITTALS

A. General
   1. Submittals shall be made in accordance with requirements.

B. Contractor shall provide a Site Demolition Plan:
   a. Proposed materials and methods to be used for cutting and patching, or matching and repairing existing construction to remain.
   b. Safety measures including signs, barriers, temporary walkways and hand railing.
   c. Haul routes and disposal sites.
   d. Traffic control measures or traffic plan where required by Contractor's proposed methods in accordance with Division 01 requirements.
   e. Identification of permits as required by the project environmental documents, federal, state or local agency in accordance with requirements.

C. Contractor shall provide copies of notices, permits, certifications and authorizations:

1. Copies of demolition authorization permits and other permits as required by project environmental documents, federal, state or local agency in accordance with requirements.
2. Delivery manifests for materials hauled and disposed by Contractor.
3. Private Property Owner's Release for material removed from the OMNITRANS project site and deposited on private property.
   a. Releases shall absolve SANBAG, OMNITRANS and its member agencies from any and all responsibility in connection with the disposal of materials on private property.
   b. Releases shall be signed by the owner(s) of the property on which the material will be deposited.
   c. Two copies of the releases shall be submitted to the Engineer for approval a minimum of 15 days prior to the start of material being deposited on private property.
4. Disposal Certification for materials removed from Job Site indicating they have been disposed of in accordance with applicable laws and regulations.

D. Contractor shall provide material certification:
   1. Indicating manufacturer and type of proposed nonshrink grout and/or epoxy bonding adhesive for patching or repairs to existing concrete structure to remain.

1.3 DELIVERY, STORAGE, AND HANDLING

A. General:
   1. Contractor to salvage items, designated for Owner's salvage, as a functional unit.
   2. Clean, list and tag each item in a manner acceptable to the Engineer for storage.
   3. Protect salvage items from damage and deliver to location designated in the Plans or as directed by the Engineer.
   4. Salvage each item with auxiliary or associated equipment required for operation.

B. Demolished Materials:
   1. On-site burning or burial of demolished materials will not be permitted.
   2. Contractor shall take possession of all demolished materials except as noted in the Contract Documents to be salvaged.
   3. Contractor shall be responsible for disposing of demolished materials in accordance with applicable federal, state and local laws and regulations in accordance with Division 01 requirements.

C. Environmental Requirements:
   1. Cleanliness, Sweeping and Dust Control shall be maintained in accordance with Division 01 requirements.
   2. Contractor will provide noise abatement as required by environmental permits or local agency requirements in accordance with Division 01 requirements.

1.4 SITE CONDITIONS

A. Perform preliminary investigations as required in Section 31 20 00 and in accordance with Division 01 requirements to ascertain extent of work.

1.5 SEQUENCING AND SCHEDULING

A. Coordinate and reschedule work as required to avoid interference with other operations of Omnitrans, as identified in the Construction Documents or in accepted schedule of site demolition, cutting and patching.

PART 2 - PRODUCTS

2.1 ACCEPTABLE MANUFACTURERS

2.2 MATERIALS

A. Nonshrink Grout:
   1. Nonmetallic, noncorrosive and nonstaining.
   2. Premixed with only water to be added in accordance with manufacturer's instructions at jobsite.

3. Grout to produce a positive but controlled expansion. Mass expansion not to be created by gas liberation or by other means.
4. Minimum compressive strength at 28 days to be 6500 psi.
5. Coat exposed edges of grout with a cure/seal compound recommended by grout manufacturer.

B. Epoxy Bonding Adhesive:
1. Two component, moisture insensitive adhesive manufactured for the purpose of bonding fresh concrete to hardened concrete.

C. Other Temporary or Permanent Material:
1. Other temporary or permanent Material shall be provided by the Contractor for proper execution of work in this Section.

D. Backfill Material:
1. Material used for backfill shall conform to the requirements of Section 31 20 00.

PART 3 - EXECUTION

3.1 GENERAL

A. No party other than the Contactor shall remove demolished material from Omnitrans property.

B. Contractor shall perform the demolition, removal, salvage, cutting and patching (including handling of demolished debris) in accordance with the Contract Plans, Project Specifications and the submitted and approved Site Demolition Plan.

C. Sawcut Existing Pavement and Remove Structural Sections:
1. Remove Structural Sections (Existing HMA Pavement) includes the removal of existing AC/HMA pavement and AB base to the limits shown in the plans.
2. The outline of the AC/HMA surface to be removed shall be cut on neat lines along score lines where they exist with a power-driven saw to a minimum depth of 0.15 FT before removing the surfacing. Surfacing and base shall be removed without damage to surfacing that is to remain in place. Damage to pavement which is to remain in place shall be repaired to a condition satisfactory to the Engineer, or the damaged pavement shall be removed and replaced with new asphalt concrete if ordered by the Engineer. Repairing or removing and replacing pavement damaged outside the limits of pavement to be replaced shall be at the Contractor's expense and no compensation will be provided thereof.
3. Removed materials shall become the property of the Contractor and shall be disposed of outside the public right of way in conformance with the provisions in Section 300-1.3 “Removal and Disposal of Materials” of the Standard Specifications for Public Works Construction 2009.
4. All concrete that is to be removed shall be saw cut and removed to the next expansion joint or score mark. All asphalt removals shall be to a clean saw cut line. All cuts are to be perpendicular to the curb and gutter with no longitudinal cuts. No diagonal cuts will be allowed. Any curb, gutter, or sidewalk sections which are to be removed and/or reconstructed shall be replaced in minimum 5 FT sections.

D. Remove Existing Chain Link Fence:
1. Remove Existing Chain Link Fence includes the removal of existing metal chain link fence wire mesh, fence post, and fence post foundation at the locations shown in the Plans.
2. Damage to fencing which is to remain in place shall be repaired to a condition satisfactory to the Engineer, or the damaged fence shall be removed and replaced with new fencing if ordered by the Engineer. Repairing or removing and replacing fencing damaged outside the limits shown in the plans shall be at the Contractor's expense and no compensation will be provided thereof.
3. Removed materials shall become the property of the Contractor and shall be disposed of outside the public right of way in conformance with the provisions in Section 01 74 19 - Construction Waste Management and Disposal and reference Section 300-1.3 “Removal and Disposal of Materials” of the Standard Specifications for Public Works Construction 2009.

E. Remove and Salvage Existing Signs:
1. Remove Existing Sign includes the removal of the sign panel, post, post foundation, and any

connectors/bolts etc.

2. Removed signs shall be the property of the Owner. Removed signs shall be salvaged in conformance with the provisions in Section 15-2.03 Salvage of the Caltrans Standard Specifications 2010.

F. Remove Existing Bollards, Headwalls, Manholes, and Inlets:
   1. Remove Existing Bollards, Planter, Headwalls, Manholes, and Inlets include the removal of existing reinforced concreted storm drain headwalls, manholes, and inlet structures as shown on the Plans.
   2. Removed structures shall be removed in conformance with the provisions in Section 15-3, "Removing Concrete," of the Caltrans Standard Specifications.

G. Removed materials shall become the property of the Contractor and shall be disposed of outside the public right of way in conformance with the provisions in Section 01 74 19 - Construction Waste Management and Disposal and reference Section 300-1.3 "Removal and Disposal of Materials" of the Standard Specifications for Public Works Construction 2009.

H. All demolition materials shall be removed to a legal disposal site. Burning of materials will not be allowed. The roadway and adjacent areas shall be left with a neat and finished appearance.

3.2 EXISTING STRUCTURES AND RELATED FACILITIES

A. Where demolition is indicated, remove and dispose of:
   1. Existing fences as identified in the Plans.
      a. Coordinate fence removal with maintaining temporary and permanent site security.
      b. Fence removal shall to be done to the nearest post to provide clean removal limits.
      c. Fence removal shall include the fence posts and fence post foundations.
   2. Temporary fences when no longer required to protect and secure the construction site.
   3. Structures in their entirety or portions to be demolished as indicated in the Plans.
      a. Exposed remaining concrete faces shall be saw cut to neat lines or finished with epoxy binder and non-shrink grout.
      b. Concrete shall be removed as required, and any remaining concrete to be utilized in the finished work or left as an existing structure shall be protected from damage and finished with epoxy binder and non-shrink grout or as indicated in the Plans.
   4. Obstructions in their entirety or portions of obstructions as indicated in the Plans; including abandoned concrete signal foundations, footings and bases located within the right-of-way shall be demolished.
   5. Removal and disposal shall be in accordance with these Specifications and the submitted and approved site demolition plan.

B. Where salvage of material or portions of structures and related facilities is indicated, material shall be carefully removed as shown in the plans for installation of new work and neatly stacked at a location approved in advance by and in accordance with the approved Site Demolition Plan. The materials shall be left in a satisfactory condition for use by as identified in the Plans or in future projects.

C. The Contractor shall replace or repair, at no expense to SANBAG and OMNITRANS, any existing structure or portion of existing structure or related facility designated to remain that is damaged during removal of the portions designated for demolition.

3.3 PAVEMENT

A. Pavement shall be demolished as indicated in the Plans and removed in accordance with the submitted and approved Site Demolition Plan.

B. Pavement shall be removed to clean, straight lines. Saw cutting of edges to be joined is required. Saw cuts shall be a minimum depth of 1-1/2 IN.
   1. Portland cement concrete pavement (PCCP) removal shall have a second full depth relief saw cut offset 12 to 18 IN parallel to the initial saw cut unless approved otherwise.
   2. If a saw cut in concrete falls within three feet of a construction joint, cold joint, expansion joint, or edge, the concrete shall be removed to the joint or edge.

C. The Contractor shall provide surface drainage of resulting surfaces following pavement removal in

accordance with Section 01 57 19 of these Specifications.

D. The Contractor shall replace at no expense to SANBAG any existing pavement designated to remain that is damaged as a result of Contactor activities.

E. All existing pavement markings and markers that are being relocated or removed shall be removed by sand blasting.

3.4 WIRING AND POLES

A. Wiring and Poles designated to be removed by the Contractor shall be removed in accordance with the Plans and the approved Site Demolition Plan. No work shall be performed until clearance to proceed has been provided by the Engineer.

3.5 UTILITIES

A. Demolition of existing utilities removed by others as shown in the Plans shall be coordinated by the Contractor with the utility companies and agencies in accordance with Division 01 of these Specifications and the approved Site Demolition Plan.

B. Existing utilities shall be permanently or temporarily rerouted/relocated and deemed operational by SANBAG before the existing utilities are taken out of service.

C. The Contractor shall cap and plug storm drain (sanitary sewer) and underdrains in accordance with the utility owner's standard details and instructions. Cap and plug pipe and other conduits abandoned due to demolition, with approved type caps and plugs as required by the utility owners.

D. Abandoned utilities under railroad tracks shall be removed and backfilled or filled with slurry in accordance with these Specifications and the Project Plans and Technical Specifications. For slurry see 31 20 00 2.01 C6.

3.6 BACKFILL OF DEMOLITION EXCAVATIONS

A. Any shoring used for support of demolition excavations shall be removed in accordance with Section 31 50 00 of these Specifications and the submitted and approved Site Demolition Plan.

B. Excavations created by demolition activities shall be backfilled and compacted in the same manner as backfilling excavations in Section 31 20 00 of these Specifications.

3.7 CLEANING OF RIGHT-OF-WAY

1. The Contractor shall, upon completion of the work to be performed within the right-of-way and/or properties of the Railroad and adjacent to its tracks, wire lines and other facilities, promptly remove from the Railroad right-of-way all Contractor's tools, implements and other materials whether brought upon the right-of-way by the Contractor or any subcontractors employee or agent of Contractor or of any subcontractor, and leave the right-of-way in a clean and presentable condition to the satisfaction of the Railroad.

PART 4 - MEASUREMENT AND PAYMENT

A. Refer to Section 01 22 00, Part 4, regarding measure and payment.

B. Work of this Section is considered incidental to work under other payment items and no separate measurement and payment will be made to the Contractor for Work of this Section. Work of this section shall include furnishing all labor, materials, tools, equipment, supplies, supervision, and incidentals necessary as described by the Contract Documents.

END OF SECTION

SECTION 31 22 00
SITE EXCAVATION AND ROUGH GRADING

PART 1 - GENERAL

1.1 DESCRIPTION

A. Definitions:
   1. Unsuitable material: Debris and/or soil material judged unsuitable by Engineer for support of slabs or other site improvements.
   2. Engineer: Soils Engineer employed by Owner, empowered to conduct inspections and make approvals.

1.2 EXTRA WORK

A. Removal and replacement of unsuitable material below design elevations will be paid for as extra work.
   1. Notify Owner's agent in time to have Engineer measure and record quantity removed.
   2. Recorded quantity will be basis for payment.
   3. Include unit price per cubic yard on Bid Form.

1.3 QUALITY ASSURANCE

A. Compaction density test:
   1. Standard Proctor, ASTM-D698.

B. Layout work by Surveyor or Civil Engineer registered in the State of California.

C. Owner will hire an independent soils laboratory to conduct in place moisture and density tests.
   1. Contractor to pay for retests of material not passing initial tests.

D. Tolerances of sub-grade:
   1. Unsurfaced areas: Plus/minus 0.20 FT from required elevations.
   2. Paved areas: Plus/minus 0.10 FT from required elevations.

1.4 JOB CONDITIONS

A. Protect existing facilities, utilities (overhead and underground), sidewalks, pavement.
   1. Repair damaged items.
   2. Cost of repair to items not indicated paid by Owner.
   3. Notify Owner and make emergency repair as directed.

B. Protect graded areas against erosion.
   1. Re-establish grade where settlement or washing occurs at no extra cost.

PART 2 - PRODUCTS

2.1 MATERIALS

A. Fill materials:
   1. Reasonably free of roots, organic material, trash, frozen matter, and stones larger than 6 IN.
   2. Add water to dry material, as required.
   3. Allow wet material to dry, as required.
   4. Fill can only be obtained on site where removed from excavating and grading.
   5. Provide additional off-site borrow or fill as required, at no extra cost.

B. Surplus material:

1. Remove from site.

PART 3 - EXECUTION

3.1 PREPARATION

A. Layout units, structures, piping, roads, parking areas and walks and establish their elevations.

B. Perform other layout work required.

C. Replace property corner markers to original location if disturbed or destroyed.

D. Preparation for embankments and fills:
   1. Before fill is started, scarify to a minimum depth of 6 IN under new roads, parking lots, or streets.
   2. Bring to optimum moisture content.
   3. Compact to a minimum 95 percent.
   4. In areas where existing ground surface is steeper than one vertical to four horizontal, bench surface in order to spread fill horizontally so that fill material will bond with existing surface.

3.2 GENERAL

A. Excavate and grade materials to design elevations.

B. Excavate and grade site to subgrades of paved and unpaved areas as indicated.

C. Excavate for miscellaneous footings, slabs, walks and other structures.

D. Cut and fill as required to bring existing grades to rough grades.

E. Furnish and place additional approved material required to bring subgrade to proper line and grade.

F. During construction, shape and drain embankments and excavation.

G. Maintain ditches and drains to provide drainage.

H. Provide pumping if required.

I. Do not fill under footings. If excavation is deeper than necessary, fill with concrete of same strength as footing concrete.

J. Remove unsuitable materials which cannot be compacted as specified and replace with suitable material.
   1. Dispose material on site as directed.
   2. Dispose material off site as directed.

K. Remove materials unsuitable to receive fill and replace with suitable material.

3.3 CONSTRUCTION OF EMBANKMENTS AND FILLS

A. Construct embankments and fills to lines and grades.

B. Make completed fill correspond to shape of typical cross section or contour indicated regardless of method used to indicate shape, size, and extent of line and grade of work.

C. Insure that cobbles larger than 4 IN, are not placed in upper 6 IN of fill or embankment.

D. Place material in lifts, maximum 8 IN loose thickness.

E. Place layers horizontally and compact each layer to specified density prior to placing additional fill.

F. Compact using suitable equipment.

1. Control moisture to meet requirements of compaction.
2. Place materials within 3 percent above to 3 percent below optimum moisture content.

G. Under roadways and parking areas and extending 1 FT beyond proposed curb line measured perpendicular from centerline, compact to 95 percent maximum dry density.

H. Under walk paving, compact to 95 percent maximum dry density.

I. For other embankments and fills not listed, compact to 90 percent of maximum dry density.

J. Under proposed building and structures, compact to density as specified in Section 31 23 00.

3.4 LAYOUT FOR ROUGH GRADING

A. Install grading stakes for checking rough and finished grade throughout area to be graded.
1. Set at 50 FT grid intervals, and as required to reflect grading variations.
2. Stakes: 1 x 2 x 24 IN, sound wood.
3. Set securely so that minimum of 6 IN is above rough grade.
4. Mark each stake to indicate design finished grade.

B. Maintain stakes until Architect has reviewed rough grade.

PART 4 - MEASUREMENT AND PAYMENT

A. Refer to Section 01 22 00, Part 4, regarding measure and payment.

B. Work of this Section is considered incidental to work under other payment items and no separate measurement and payment will be made to the Contractor for Work of this Section. Work of this section shall include furnishing all labor, materials, tools, equipment, supplies, supervision, and incidentals necessary as described by the Contract Documents.

END OF SECTION

This page intentionally left blank.

SECTION 31 22 00
SITE EXCAVATION

PART 1 - GENERAL

1.1 DESCRIPTION

A. Definitions:
   1. Unsuitable material: Debris and/or soil material judged unsuitable by Engineer for support of slabs or other site improvements.

1.2 EXTRA WORK

A. Removal and replacement of unsuitable material below design elevations will be paid for as extra work.
   1. Notify Owner's agent in time to have Engineer measure and record quantity removed.
   2. Recorded quantity will be basis for payment.
   3. Include unit price per cubic yard on Bid Form.

1.3 QUALITY ASSURANCE

A. Compaction density test:
   1. Standard Proctor, ASTM-D698.

B. Layout work by Surveyor or Civil Engineer registered in the State of California.

C. Tolerances of sub-grade:
   1. Unsurfaced areas: Plus/minus 0.20 FT from required elevations.
   2. Paved areas: Plus/minus 0.10 FT from required elevations.

1.4 JOB CONDITIONS

A. Protect existing facilities, utilities (overhead and underground), sidewalks, pavement.
   1. Repair damaged items.
   2. Cost of repair to items not indicated paid by Owner.
   3. Notify Owner and make emergency repair as directed.

B. Protect graded areas against erosion.
   1. Re-establish grade where settlement or washing occurs at no extra cost.

PART 2 - PRODUCTS

2.1 MATERIALS

A. Fill materials:
   1. Reasonably free of roots, organic material, trash, frozen matter, and stones larger than 6 IN.
   2. Add water to dry material, as required.
   3. Allow wet material to dry, as required.
   4. Fill can only be obtained on site where removed from excavating and grading.
   5. Provide additional off-site borrow or fill as required, at no extra cost.

B. Surplus material:
   1. Remove from site.

PART 3 - EXECUTION

3.1 PREPARATION

A. Layout units, structures, piping, roads, parking areas and walks and establish their elevations.

B. Perform other layout work required.

C. Replace property corner markers to original location if disturbed or destroyed.

3.2 GENERAL

A. Excavate for miscellaneous footings, slabs, walks and other structures.

B. Maintain ditches and drains to provide drainage.

C. Provide pumping if required.

D. Do not fill under footings. If excavation is deeper than necessary, fill with concrete of same strength as footing concrete.

E. Remove unsuitable materials which cannot be compacted as specified and replace with suitable material.
   1. Dispose material on site as directed.
   2. Dispose material off site as directed.

F. Remove materials unsuitable to receive fill and replace with suitable material.

PART 4 - MEASUREMENT AND PAYMENT

A. Refer to Section 01 22 00, Part 4, regarding measure and payment.

B. Work of this Section is considered incidental to work under other payment items and no separate measurement and payment will be made to the Contractor for Work of this Section. Work of this section shall include furnishing all labor, materials, tools, equipment, supplies, supervision, and incidentals necessary as described by the Contract Documents.

END OF SECTION

SECTION 31 23 33
TRENCHING, BACKFILLING AND COMPACTING FOR UTILITIES

PART 1 - GENERAL

1.1 DESCRIPTION

A. Definitions:
   1. Unsuitable material: Debris and/or soil material judged unsuitable by Engineer for support of slabs or other site improvements.
   2. Engineer: Soils Engineer employed by Owner and empowered to undertake necessary inspections and approvals.
   3. Rock excavation: Excavation of rock material which is sufficiently solid and of such strength that it cannot be loosened or broken down in a single pass with following equipment.
      a. Late model tractor mounted hydraulic ripper equipped with single digging point sized to use with and propelled by crawler type tractor rated at a minimum 200 net flywheel horsepower, operating in low gear.
      b. A 3/4 cubic yard hydraulic backhoe with a rock tooth.

1.2 EXTRA WORK

A. Removal and replacement of unsuitable material will be paid for as extra work.
   1. Notify Owner's agent in time to have Engineer measure and record quantity removed.
   2. Recorded quantity will be basis for payment.
   3. Include unit price per cubic yard on Bid Form.

B. Rock excavation will be paid for as extra work.
   1. Notify Owner's agent in time to have Engineer measure and record quantity removed.
   2. Recorded quantity will be basis for payment.
   3. Include unit price on Bid Form.

1.3 QUALITY ASSURANCE

A. Compaction density test:
   1. Standard Proctor, ASTM-D698.

B. Owner will hire an independent soils laboratory to conduct in place moisture and density tests.
   1. Contractor to pay for retests of material not passing initial tests.
   2. Notify Owner at least 2 weeks prior to anticipated date of testing.
   3. Contractor to pay additional costs if work is delayed due to Contractor's failure to notify party as specified above.

C. Comply with aspects of "Safety Rules and Regulations for Excavation" as promulgated by State law for state in which excavation will occur.

1.4 JOB CONDITIONS

A. Verify location and existence of underground utilities.
   1. Omission or inclusion of located utility items on drawings does not constitute non-existence or definite location.
   2. Secure and examine local utility surveyor records for available location data.

B. Protect existing utilities from damage.
   1. Repair damages to utility items.

C. Avoid overloading.

D. Keep surcharge sufficient distance back from edge of excavation to prevent slides or caving.

E. Maintain and trim excavated materials in such a manner to be as little inconvenience as possible to public and adjoining property owners.

F. Provide full access to public and private premises, to fire hydrants, at street crossings, sidewalks and other points as designated by Engineer to prevent serious interruption of travel.

PART 2 - PRODUCTS

2.1 MATERIALS

A. Backfill material:
   1. As approved by Engineer.
   2. Free of rock cobbles, roots, sod or other organic matter, and frozen material.
   3. Moisture content at time of placement:
      a. Within 3 percent of optimum moisture content.
      b. Wet dry material, as required.
      c. Dry wet material, as required or:
      d. Furnish off site material at no additional cost to Owner.

PART 3 - EXECUTION

3.1 GENERAL

A. Remove and dispose materials Engineer finds unsuitable.

B. Trench, backfill and compact for underground utilities.

3.2 TRENCH EXCAVATION

A. Excavate trenches by open cut method to depth indicated and necessary to accommodate work.
   1. Permission may be granted for tunnel work for crossing under crosswalks, driveways or existing utility lines.
   2. Such tunnels are limited to 10 FT in length.

B. Open no more than 300 LF of trench at one time, or less, as required by Engineer.

C. Failure to comply may necessitate shutdown of entire project until backfilling is performed.

D. Carry rock excavations minimum of 12 IN below indicated invert elevations.

E. Do not excavate below indicated grades unless required to remove unsuitable material.

F. Backfill overexcavations in maximum 8 IN lifts compacted to specified density.

G. Trench size:
   1. Excavate only sufficient width to accommodate free working space.
   2. Cut trench walls vertically from bottom of trench to top of pipe, conduit, or utility service.
   3. Trench width at top of pipe or conduit may not exceed outside diameter of utility service by more than following dimensions:

Overall Diameter of Utility Service	Excess Dimension
33 IN and less	16 IN
more than 33 IN	24 IN

H. Keep trenches free of water.

I. Brace and sheet trenches as soil conditions dictate.

J. Do not remove until backfilling has progressed to a stage that no damage to piping, utility service, or conduit will result due to removal.

3.3 PREPARATION FOR PIPE LAYING

A. See drawings and specific pipe material sections for embedment requirements.

B. When discrepancy exists between those requirements and these specifications, provide type of embedment which provides greatest load factor.

C. Types of embedment:
   1. Class A: Concrete cradle.
      a. Load factors:
         1) 2.2 - Lightly Tamped.
         2) 2.8 - Carefully tamped.
         3) 3.4 - Reinforced Concrete with p=0.4 percent.
   2. Class 4: Concrete arch type bedding.
      a. Load factors:
         1) 2.8 - Plain Concrete.
         2) 3.4 - Reinforced Concrete with p=0.4 percent.
         3) 4.8 - Reinforced Concrete with p=1.0 percent.
   3. Class B: First-class bedding.
      a. Shaped bottom with tamped backfill, or:
      b. Compacted granular bedding with tamped backfill.
      c. Load factor:
         1) 1.9 - Carefully compacted backfill.
   4. Class C: Ordinary bedding.
      a. Granular bedding with tamped backfill.
      b. Load factor:
         1) 1.5 - Lightly compacted backfill.

D. Form bell holes in trenches such that only barrel of pipe is firmly supported by bedding material.

3.4 BACKFILLING

A. Do not backfill until tests are performed on system, and system complies with specified requirements.

B. Hand or pneumatic tamp backfill around and over pipe in lifts not exceeding 8 IN loose thickness.

C. Compact to specified density.

D. Exercise care in backfilling operations to avoid displacing pipe joints either horizontally or vertically and to avoid breaking pipe.

E. Do not water flush or puddle to consolidate backfill.

3.5 COMPACTION

A. Compact trench backfill in areas under paved roads, parking areas, sidewalks and other structures as directed by Engineer to at least 95 percent of maximum dry density.

B. In locations where trench will not be under paved areas, compact backfill to minimum 90 percent of maximum dry density.

3.6 CLEANUP

A. Cleanup debris resulting from work.

PART 4 - MEASUREMENT AND PAYMENT

A. Refer to Section 01 22 00, Part 4, regarding measure and payment.

B. Work of this Section is considered incidental to work under other payment items and no separate measurement and payment will be made to the Contractor for Work of this Section. Work of this section shall include furnishing all labor, materials, tools, equipment, supplies, supervision, and incidentals necessary as described by the Contract Documents.

END OF SECTION

SECTION 32 13 13
CONCRETE PAVING

PART 1 - GENERAL

1.1 GENERAL CONDITIONS

A. The Conditions of the Contract and Division 1 apply to this section as fully as if repeated herein.

1.2 WORK INCLUDED

A. Provide all equipment and materials to perform all work necessary to construct the exterior concrete paving work, complete, as indicated on the Plans and as specified.
   1. Pedestrian concrete paving shall include but is not limited to: concrete sidewalks and accessibility ramps, patio areas.
   2. Vehicular concrete paving shall include but is not limited to: drive aisles, access ways, and associated vehicular ramps.

1.3 RELATED WORK

A. Division 03 – Concrete

B. Division 31– Earthwork

C. Division 32 – Exterior Improvements

D. Section 32 13 23 – Concrete Paving Surface Treatment

E. Section 34 11 27 – Sub-ballast and Aggregate Base Courses

1.4 REFERENCES

A. ASTM C33 – Standard Specification for Concrete Aggregates

B. ASTM C94 – Standard Specification for Ready-Mixed Concrete

C. ASTM C150 – Standard Specification for Portland Cement

D. ASTM C260 – Standard Specification for Air Entraining Admixtures for Concrete

E. ASTM C494 – Standard Specification for Chemical Admixtures for Concrete

F. ASTM C309 – Standard Specification for Liquid Membrane-Forming Compounds for Curing Concrete

G. ACI 117 – Tolerances for Concrete Construction and Materials

H. ACI 301 – Structural Concrete

I. ACI 303.1 – Cast-in-Place Architectural Concrete

J. ACI 305.1 – Hot Weather Concreting

K. ACI 306.1 – Cold Weather Concreting

L. ACI 308R – Curing Concrete

M. ACI 316R-82 – Construction of Concrete Pavements and Concrete Bases

N. ACI 347 – Formwork for Concrete

O. SSPWC – Standard Specifications for Public Works Construction 2009

P. CPUC – California Public Utilities Commission, General Orders 26D and 118

Q. California Code of Regulations Title 24 CBC

1.5 QUALITY ASSURANCE

A. Construction minimum standards: State of California Department of Transportation, "Standard Specifications for Road and Bridge Construction," as amended to date.

B. Should conflicts arise between standard specifications of government agencies mentioned herein and Contract Documents, Contract Documents shall govern.

C. Where a particular type of material or method is specified, no other type of material or method will be permitted, except as described in Section 00 26 00, but balance of State Specifications shall apply.

D. Work, materials, and color of the handicap ramp paving shall conform to applicable sections of CCR Title 24, Section 1127B and Figures 11B-19A through 19C and 11B-20A through 20E; as well as Americans with Disabilities Act (ADA) Accessibility Guidelines (ADAAG) for Buildings and Facilities.

E. Paving work, base course, and related construction, shall be done only after all excavation and construction work which might damage the paving has been completed. Damage caused during construction shall be repaired before acceptance.

F. Any existing paving area shall, if damaged or removed during the course of this project, be repaired or replaced under this section, unless marked for demolition. Workmanship and materials for such repair and replacement, except as otherwise noted, shall match as closely as possible those employed in existing work.

1.6 SUBMITTALS

A. Description of Methods and Sequence of Placement.

B. Shop Plans:
   1. Indicating all joint locations identified by type and shown for review
   2. Method of keying

C. Product Data:
   1. Concrete mix design
   2. Form release agent
   3. Prefabricated control joint
   4. Preformed joint filler
   5. Sealants
   6. Slip plane joint

D. Samples of:
   1. Aggregate and sand
   2. Form facing materials
   3. Surface retarder
   4. Form release agents

E. See Section 32 13 32 for additional finish information and submittal requirements.

F. Delivery tickets: Copies of delivery tickets for each load of concrete delivered to the site, showing date, time of loading, time of delivery, class, strength of concrete, Contract number, mix design, slump ordered, type of cement, admixtures, name of purchasing Contractor, batch weights of all materials, number of the revolution counter when the truck left the plant, any water added at the site, and the authorizing person.

1.7 DELIVERY, STORAGE AND HANDLING

A. Aggregates: protect aggregates staged on-site from weather and contamination.

B. Cement: protect sacks of cementious materials from damp or wet conditions.

C. Formwork: insure form lumber is stored so to preserve shape and structural integrity.

1.8 ENVIRONMENTAL CONDITIONS

A. Comply with requirements of Division 03 for techniques of placing concrete.

B. Concrete Paving: schedule placement to minimize exposure to wind and hot sun before curing materials are applied; avoid placing concrete if rain, snow, or frost is forecast within 24 hours. Protect fresh concrete from moisture and freezing.

C. Formed Concrete: schedule work to minimize differences in curing conditions; when possible, apply curing compound as soon as forms are stripped.

1.9 PRECONSTRUCTION MOCK-UP PANELS:

A. Coordinate mock-up requirements with mock-ups specified in other sections; the same mock-up may be used for more than one purpose.

B. Provide mock-ups simulating actual design and execution conditions for concrete mix materials, reinforcement, form work, placing sequence, form removal, curing, finishing, and methods and materials of stain removal and correction of defective work. Sample full-scale mock-up panel, 5 foot X 5 foot minimum, shall be constructed prior to start of paving.

C. General Mock-Up Requirements:
   1. Schedule mock-up casting for acceptance at least 7 days prior to casting of concrete surfaces represented by the mock-ups.
   2. Locate mock-up panels in non-public areas accepted by the Owner.
   3. Mock-up sequences of forming, placing, form removal, curing, and finishing shall be reviewed and accepted by the Owner.
   4. Mock-up form-work shall be reviewed and accepted by the Owner's Representative before placing of concrete.
   5. Construct mock-up panels or areas as indicated to demonstrate the ability to cast concrete for concrete layout, banding or detail to achieve shape, color, and textured finish required.
   6. Continue to cast mock-ups until acceptable mock-ups are produced. Accepted mock-ups shall be the standard for color, texture, finish, and workmanship for the work of this section.
   7. Demonstrate in the construction of the mock-up form work the sealer material, form release agent, and curing materials and methods to be used.
   8. Use the same concrete mixes and placement procedures, accepted in mock-ups, in the final work, unless otherwise directed by the Owner.
   9. Protect accepted mock-ups from damage until completion and acceptance of the work represented by the mock-up.
   10. Remove mock-up panels at completion of project, as directed by the Owner.

D. Source of Materials: Utilize the same source, stock, or brand of concrete materials for each class or mix of concrete which is to be exposed. Do not interchange materials or mixes until an additional mock-up shows that uniformity in finish texture and color as compared to original mock-up will be maintained. If necessary, obtain and stockpile materials in sufficient quantity to ensure continuity and uniformity.

PART 2 - PRODUCTS

2.1 MATERIALS

A. Portland Cement Concrete (Air-Entrained):
   1. Ratio per Geotechnical recommendation.
   2. Conforming to ACI 325.9F, Guide for Construction of Concrete Pavements and Bases, and ASTM C94 and ASTM C231.
   3. Minimum compressive strength at 28 days shall be 3500 psi.

4. Concrete slump shall be no less than 2 inches nor greater than 4 inches, in accordance with ASTM C143.
5. Fine and coarse aggregates shall conform to ASTM C33.
6. Concrete shall contain a water reducing agent to minimize cement and water content of the concrete mix at the specified slump. Water reducing agent shall conform to ASTM C494.
7. No admixtures other than those specified shall be used in the concrete without the specific written permission of Resident Engineer in each case.

B. Aggregates:
   1. Conform to Section 34 11 27 Aggregate Base Courses.

C. Steel Reinforcement:
   1. Steel reinforcing bars:
      a. Shall conform to ASTM A 615.
      b. Bars employed as reinforcement shall be deformed type.
      c. Bars employed as dowels shall be hot-rolled plain rounds.
      d. Unless otherwise indicated on the Plans, reinforcing bars shall be Grade 60.
   2. Welded wire fabric reinforcement:
      a. ASTM-A185 or ASTM-A497.
      b. Vehicular paving: 6 x 6 - W2.9 x W2.9.

D. Refer to Section 32 13 23 Concrete Paving Surface Treatment for finish information.

E. Dowels, load transfer devices, tie bars, etc.: ASTM-A615, Grade-60.

F. Expansion Joint Filler:
   1. Preformed, non-bituminous type joint filler conforming to ASTM D 1752, Type II, similar to Sealtight Cork Expansion Joint Filler, or approved equal orASTM-D545, flexible foam.
   2. Thickness:
      a. Pedestrian: 1/2”
      b. Vehicular paving and curbs: 1/2”
   3. Pre-molded filler shall be one piece for the full depth and width of the joint leaving a sealant recess as indicated. Use caps to match filler width.
   4. Use of multiple pieces of lesser dimensions to make up required depth and width of joint will not be permitted.
   5. Expansion joint shall receive joint backer rod and shall be sealed with joint sealant.

G. Sealant:
   1. F.S.TT-S-00227F, Type 1, Class A, polyurethane type.
   2. Use self-leveling type for horizontal joints.
   3. Use gun grade, non-sag type for horizontal and vertical joints.
   4. Color of sealant shall be selected by the Owner’s Representative from the manufacturer's full color range.
   5. Primer shall be that recommended by the sealant manufacturer for the use intended.
   6. Joint backing where required shall be as recommended by the sealant manufacturer.

H. Bond breaker:
   1. Liquid membrane, plastic film or asphalt saturated felt or paper.
   2. Bond breaker shall be round closed-cell polyethylene by DFC, Sonneborn or approved equal.

I. Curing Materials:
   1. Curing Blankets:
      a. McTech Group UltraCure disposable curing blankets for colored or decorative concrete, or approved equal.
   2. Curing Material for Colored Concrete:
      a. Davis Colors W-1000 Clear Cure and Seal, or approved equal.
   3. Curing Material for Uncolored Concrete:
      a. Curing shall be by moist curing or by use of curing compound.

b. Curing paper shall be non-staining, fiber reinforced laminated Kraft bituminous product conforming to ASTM C 171. 4 mil polyethylene sheeting may be substituted for curing paper.
c. Curing compound shall be a resin-base, white pigmented compound conforming to ASTM C 309, Type 2.

PART 3 - EXECUTION

3.1 CONSTRUCTION - GENERAL

A. Construct to line and grade indicated.

B. Construct in accordance with State and Federal specifications.

3.2 PREPARATION OF SUBGRADE

A. Areas to be paved shall be compacted and brought to subgrade elevation per soils report before work of this section is performed. Final fine grading, filling, and compaction of areas to receive paving, as required to form a firm, uniform, accurate, and unyielding subgrade at required elevations and to required lines, shall be done under this Section.

B. Existing subgrade material which will not readily compact as required shall be removed and replaced with satisfactory materials. Additional materials needed to bring subgrade to required line and grade and to replace unsuitable material removed shall be material conforming to this Section.

C. Subgrade of areas to be paved shall be re-compacted per soils report.

D. Excavation required in pavement subgrade shall be completed before fine grading and final compaction of subgrade are performed. Where excavation must be performed in complete subgrade, subbase, base, or pavement, subsequent backfill and compaction shall be performed per soils report.

E. Areas being graded or compacted shall be kept shaped and drained during construction. Ruts greater than or equal to 2 feet deep in subgrade, shall be graded out, reshaped as required, and re-compacted before placing pavement.

F. Materials shall not be stored or stockpiled on subgrade.

G. Disposal of debris and other material excavated under this section, and material unsuitable for or in excess of requirements for completing work of this section shall be disposed of off-site.

H. Prepared subgrade will be inspected by Soils Engineer.
   1. Subgrade shall be approved before installation of gravel base course.
   2. Disturbance to subgrade caused by inspection procedures shall be repaired under this section of the specification.

3.3 AGGREGATE BASE COURSE

A. Aggregate base course for paving and the spreading, grading, and compaction methods employed shall conform to standard requirements for usual base course of this type for first class road work, and the following:
   1. Standard Specifications for Public Works Construction Section 200-2.

B. Aggregate material shall be applied in lifts less than or equal to 6 inches thick, compacted measure. Each lift shall be separately compacted to specified density, using a 6-ton steel wheel roller or vibratory roller equivalent to a 6-ton static roller, or an approved equivalent.
   1. Material shall be placed adjacent to wall, manhole, catch basin, and other structures only after they have been set to required grade and level.

2. Rolling shall begin at sides and progress to center of crowned areas, and shall begin on low side and progress toward high side of sloped areas. Rolling shall continue until material does not creep or wave ahead of roller wheels.
3. Surface irregularities which exceed 1/2 inch as measured by means of a 10-foot long straightedge shall be replaced and properly recompacted.

C. Base course shall be compacted at optimum moisture content to not less than 95% of maximum density as determined by ASTM D 1557.

D. Subgrade and base course shall be kept clean and uncontaminated. Less select materials shall not be permitted to become mixed with gravel. Materials spilled outside pavement lines shall be removed and area repaired.

E. Portions of subgrade or of construction above which become contaminated, softened, or dislodged by passing of traffic, or otherwise injured, shall be cleaned, replaced, or otherwise repaired to conform to the requirements of this specification before proceeding with next operation.

3.4 STEEL REINFORCEMENT

A. Before being placed in position, reinforcing for reinforced concrete shall be thoroughly cleaned of loose mill and rust scale, dirt, ice and other foreign material which may reduce the bond between the concrete and reinforcing. Where there is delay in placing concrete after reinforcement is in place, bars shall be reinspected and cleaned when necessary.

B. Any bar showing cracks after bending shall be discarded.

C. Unless otherwise indicated on the Plans, reinforcing shall extend within 2 inches of form work and expansion joints. Reinforcing shall continue through control joints. Adjacent sheets of fabric reinforcing shall lap 6 inches.

D. After forms have been coated with form release agent, but before concrete is placed, reinforcing steel anchors shall be securely wired in the exact position called for, and shall be maintained in that position until concrete is placed and compacted. Chair bars and supports shall be provided in a number and arrangement satisfactory to the Owner's Representative.

3.5 PORTLAND CEMENT CONCRETE PAVING

A. Paving mix, equipment, methods of mixing and placing, and precautions to be observed as to weather, condition of base etc., shall meet the requirements of ACI 316R.

B. Place concrete in accordance with ACI 301.

C. Owner's Representative shall be notified of concrete placement sufficiently in advance of start of operation to allow his representative to complete preliminary review of the work, including subgrade, forms, and reinforcing steel, if used.

D. Concrete shall arrive at the job site so that no additional water will be required to produce the desired slump. When conditions develop that require addition of water to produce the desired slump, permission of the Owner's Representative must be obtained. The concrete shall be transported from the mixer to its place of deposit by a method that will prevent segregation or loss of material.

E. Work shall not be performed during rainy weather or when temperature is less than 40° F.

F. Form areas of different colors and different materials separately.

G. Adjacent work and existing conditions of context shall be thoroughly protected from stain and damage during entire operation. Damaged and stained areas shall be replaced or repaired to equal their original conditions.

H. To prevent contamination of soil at tree pits, the Contractor shall:
1. Fasten sheet barrier prior to removal of formwork around tree wells.

2. Tree pits shall only be dug after all acid washing is completed and the contaminated soil removed from the site.

I. Existing concrete, earth, and other water-permeable material against which new concrete is to be placed shall be thoroughly damp when concrete is placed. There shall be no free water on surface.

J. Concrete which has set or partially set before placing shall not be employed. Re-tempering of concrete will not be permitted.

K. Concrete shall be thoroughly spaded and tamped to secure a solid and homogeneous mass, thoroughly worked around reinforcement and into corners of forms.

L. Ensure reinforcement, inserts, embedded parts, and formed joints are not disturbed during concrete placement.

M. Place concrete continuously between predetermined construction and control joints. Do not break or interrupt successive pours such that cold joints occur.

N. Honeycomb or embedded debris in concrete is not acceptable. Notify Owner's Representative upon discovery.

O. When joining fresh concrete to concrete which has attained full set, the latter shall be cleaned of foreign matter, and mortar scum and laitance shall be removed by chipping and washing. Clean, roughened base surface shall be saturated with water, but shall have no free water on surface. A coat of 1:1 cement-sand grout, approximately 1/8" thick, shall be well scrubbed into thoroughly dampened concrete base. New concrete shall be placed immediately, before grout has dried or set.

3.6 CONCRETE VEHICULAR PAVING

A. On properly compacted sub-grade, install concrete of thickness detailed on plans.
   1. Screed to avoid material segregation using mechanical methods.; manual methods may be used in small areas.
   2. Hand finish as necessary, non-directional, swirled and uniform.
   3. Texture surface by a wet, double-burlap drag or broom-finish unless otherwise specified on plans.

B. Provide longitudinal and transverse contraction joints in locations indicated.
   1. 1/2" wide by 0.25 depth of slab with 1/4" radius edges at top, or:
   2. Saw cut, 1/8" by minimum 0.25 depth of slab.
   3. Fill with sealant.

C. Provide expansion joints in locations indicated or per SSPWC 2009.
   1. 3/4 IN wide by full depth of pavement with 1/4" radius edges at top.
   2. Provide expansion joints where paving abuts other structures.
   3. Set joint filler to within 1" of surface.
   4. Seal with sealant.

D. Provide construction joints at end of each day's work and whenever necessary to suspend work for a period of more than 30 minutes.
   1. Key joints with 2" x 1" key.
   2. Provide ½" diameter by 3" long deformed tie bars at 30" OC, centered in pavement; perpendicular to joint.
   3. Provide 1/2 IN wide by 1 IN deep joint with 1/4 IN radius edges at top.
   4. Seal with sealant.

E. Provide thickened edge at drive entrances abutting slabs.
   1. At end of concrete, make slab 1.5 times normal thickness and slope bottom to normal thickness in 3 feet.

F. Correct surface deviations by removing and replacing the non-complying sections; or by grinding as approved by Engineer.

G. Vehicular concrete is to be Broom finish unless specified otherwise on plans; refer to Section 32 13 23 Concrete Paving Surface Treatment.

H. Dimensions on Plans are to face of curb.

I. Depress curbs for curb ramps.

3.7 CONCRETE WALK PAVING

A. Refer to Section 32 13 23 for Concrete Finish information.

B. On properly compacted sub-grade, install 4" layer of concrete.
   1. Place walk paving 1/4" above top of curb.
   2. Slope surface at 1:50 transversely toward curb.
   3. See plans for finish information.

C. At single width walks of 8 feet or less, provide bond breaker between walk paving and back of curb.
   1. At other locations, provide expansion joint material between walk paving and back of curb.

D. Provide contraction joints:
   1. Construct tooled (dummy) joints as indicated on plans or at 10' intervals as applicable.
   2. Keep joints straight and perpendicular to edge of walk unless otherwise indicated.
   3. Locate joints as indicated on hardscape layout plans.

E. Provide expansion joints as indicated and where walks meet other structures.
   1. Expansion joints at maximum 20 feet OC
   2. Set joint filler to within 1/2" of surface
   3. Do not seal transverse joints of single width walks
   4. Seal other joints

F. Correct any isolated low points to eliminate ponding conditions.
   1. Correct surface deviations by removing and replacing the non-complying sections; or by grinding as approved by Engineer.
   2. Reevaluate final grade after any adjustments to insure compliance with all State and Federal universal accessibility laws.

G. Do not place concrete where standing water is present.

3.8 EXPANSION JOINTS

A. Unless otherwise indicated in the plans, expansion joints shall adhere to the following: :
   1. Pre-molded filler shall be one piece for the full depth and width of the joint leaving a sealant recess as indicated on the plans. Utilize caps to match filler width.
   2. Use of multiple pieces of lesser dimensions to make up required depth and width of joint will not be permitted.
   3. Except as otherwise noted on the drawings, joint filler shall be 1/4" thick.

B. Expansion joint shall receive joint backer rod and shall be sealed with joint sealant.

3.9 CONTROL JOINTS

A. Control joints (noted as score lines or "paving joint" on plans) shall meet the requirements of weakened plan joints in conformance with SSPWC 2009, Section 302-6.5.4.

B. Unless otherwise dimensioned on the Plans, control joints shall be located 10 feet OC maximum, integrated into jointing pattern on Plans.

C. Saw cut joints shall be sawn using a diamond blade concrete power saw. Joint shall be made after concrete is finished and when the surface is stiff enough to support the weight of workmen without damage to the slab. If early sawing causes undercutting or washing of the concrete, delay the sawing operation and repair the damaged areas.

D. Saw shall cut into slab no less than 25% of slab depth. Cuts shall be full depth for entire area indicated; no radical transitions. Hand cut with hand saw radial end ducts for full cut.

E. The saw cut shall not vary more than 1/4" from the true joint alignment. Discontinue sawing if a crack develops ahead of a saw cut. Immediately after each joint is sawed, thoroughly clean the saw cut and adjacent concrete surface. Re-spray surfaces treated with curing compound which are damaged during the sawing operations as soon as the water disappears. Protect joints in a manner to prevent the curing compound from entering the joints.

F. Unless otherwise indicated, score lines shall be tooled into the concrete slab in pattern indicated on the Plans, or every 10 feet OC maximum. Joint shall be made after concrete is finished and when the surface is stiff enough to support the weight of workmen without damage to the slab, but before slab has achieved its final set.

3.10 CONSTRUCTION JOINTS

A. Transverse construction joints shall be placed whenever placing of concrete is suspended for more than 30 minutes. All joints may not be shown on drawing; adhere to locations or patterns shown on plans where possible.
   1. Butt joint with dowels and thickened edge joint shall be used if construction joint occurs at location of control joint.
   2. Keyed joints with tie bars shall be used if the joint occurs at any other location.

3.11 SEALING OF JOINTS

A. Sealant for sealing of control joints and expansion joints in concrete paving shall be a two component polyurethane based sealant conforming to ASTM C920, Type M, Grade P, Class 25, Use T_1 with a Shore A hardness of 30 plus or minus 5, or better.

B. Verify color of sealant with Owner's Representative; primer shall be utilized as recommended by the sealant manufacturer for the use intended.

C. Joint backing shall be as recommended by the sealant manufacturer.

3.12 CURING AND SEALING

A. Keep concrete continuously damp from time of placement until end of specified curing period. Water is not to be added to surface during floating and troweling operations, and not earlier than 24 hours after concrete placement. Between finishing operations, protect surface from rapid drying by a covering of waterproofing paper. Surface shall be damp when the covering is placed over it, and shall be kept damp by means of a fog spray of water, applied as often as necessary to prevent drying, but not sooner than 24 hours after placing concrete. None of the water so applied shall be troweled or floated into surface.

B. All concrete shall be cured with new, non-staining, curing paper and sealed with a penetrating, non-gloss finish sealer. The concrete shall be at least one month old, dry, clean, and free of dust, paint plaster, oils and waxes, curing compounds, and other marks and discoloration.

C. If concrete is cured with a curing compound, compound shall be applied at a rate of 200 SQ FT/GAL, in 2 applications perpendicular to each other.

D. Maintain concrete between 65-85° F during curing.

E. Curing Colored Concrete:
   1. Colored concrete shall not under any circumstances, be cured using water fog misting or ponding, burlap, plastic sheeting, or other wet covering.

2. Curing material and method shall be in strict conformance with manufacturer's guidelines and recommendations.
3. Only if additional protection is absolutely required, the surface should remain uncovered for at least 4 days, after which time new and unwrinkled non-staining reinforced waterproof Kraft curing paper may be used.

F. Sealant:
1. General:
a. Color of sealant shall be selected by the Owner's Representative from the manufacturer's full color range.
b. Primer shall be that recommended by the sealant manufacturer for the use intended.
c. Joint backing where required shall be as recommended by the sealant manufacturer.

3.13 PATCHING

A. Patching is limited to 2% of any exposed surface.

B. Patch voids larger than 3/4" wide or 1/2" deep; remove projections larger than 1/"

C. Immediately after removing forms, patch minor defects and honeycombed area; patch before concrete is thoroughly dry.

D. Repair by cutting back to full solid surface and in a manner to form a key for cement mortar fill.

E. Thoroughly wet areas to be patched prior to placing patching mortar.

F. Patch and compact patching material into place; neatly finish exposed surface. Match adjoining surface per accepted mockup.

3.14 TOLERANCES

A. Unless otherwise noted, conform to ACI 302.1R.

3.15 PROTECTION OF CONCRETE SURFACES

A. Concrete surfaces shall be protected from traffic or damage until surfaces have hardened sufficiently. If necessary, 1/2 inch thick plywood sheets shall be used to protect the exposed surface.

PART 4 - MEASUREMENT AND PAYMENT

A. Refer to Section 01 22 00, Part 4, regarding measure and payment.

B. Work of this Section is considered incidental to work under other payment items and no separate measurement and payment will be made to the Contractor for Work of this Section. Work of this section shall include furnishing all labor, materials, tools, equipment, supplies, supervision, and incidentals necessary as described by the Contract Documents.

END OF SECTION

SECTION 32 13 23
SPECIAL CONCRETE FINISHES

PART 1 - GENERAL

1.1 GENERAL CONDITIONS

A. The Conditions of the Contract and Division 1 apply to this section as fully as if repeated herein.

1.2 SCOPE OF WORK

A. Integrally colored concrete with surface retardant.

B. Integrally colored concrete with surface retardant and specialty aggregate.

C. Exposed aggregate concrete.

1.3 RELATED WORK

A. Section 32 13 13 – Concrete Paving

B. Division 03 – Concrete

1.4 REFERENCES

A. ASTM C33 – Standard Specification for Concrete Aggregates

B. ASTM C260 – Standard Specification for Air Entraining Admixtures for Concrete

C. ASTM C494 – Standard Specification for Chemical Admixtures for Concrete

D. ASTM C979 – Standard Specification for Pigments for Integrally Colored Concrete

E. ACI 117 – Tolerances for Concrete Construction and Materials

F. ACI 303.1 – Cast-in-Place Architectural Concrete

1.5 QUALITY ASSURANCE

A. Perform work in accordance with ACI 301.

B. Work is to be performed by an installer regularly engaged in installation of architectural concrete having a record of successful installations acceptable to the Owner's Representative.

1.6 SUBMITTALS

A. For each type of specialty-finished concrete indicated on Plans, provide description of methods and sequence of placement.

B. Product Data:
   1. Concrete mix design
   2. Concrete additives
   3. Curing products
   4. Form facing materials
   5. Form releasing agents
   6. Proprietary cleaning agents
   7. Surface retardants

C. Samples of:
   1. Concrete color additive (sample chips) for verification
   2. Additional/specialty aggregate and sand

1.7 DELIVERY, STORAGE AND HANDLING

A. Color Additives: Comply with manufacturer's instructions; deliver to site or batch plant in original, unopened packaging and store in dry conditions. Schedule delivery of concrete to provide consistent mix times from time color additive is placed in mixture until placement of concrete on site.

B. Aggregates: protect aggregates staged on-site from weather and contamination.

1.8 ENVIRONMENTAL CONDITIONS

A. Comply with requirements of Division 03 for techniques of placing concrete.

B. Concrete Paving: schedule placement to minimize exposure to wind and hot sun before curing materials are applied; avoid placing concrete if rain, snow, or frost is forecast within 24 hours. Protect fresh concrete from moisture and freezing.

C. Formed Concrete: schedule work to minimize differences in curing conditions; when possible, apply curing compound as soon as forms are stripped.

1.9 PRECONSTRUCTION MOCK-UP PANELS:

A. Coordinate mock-up requirements with mock-ups specified in other sections; the same mock-up may be used for more than one purpose.

B. Provide mock-ups simulating actual design and execution conditions for concrete mix materials, reinforcement, form work, placing sequence, form removal, curing, finishing, and methods and materials of stain removal and correction of defective work. Sample full-scale mock-up panel, 5 foot X 5 foot minimum, shall be constructed prior to start of paving.

C. General mock-up requirements:
   1. Schedule mock-up casting for acceptance 7 days prior to casting of concrete surfaces represented by the mock-ups.
   2. Locate mock-up panels in non-public areas accepted by the Owner.
   3. Mock-up sequences of forming, placing, form removal, curing, and finishing shall be reviewed and accepted by the Owner.
   4. Mock-up form-work shall be reviewed and accepted by the Owner's Representative before placing of concrete.
   5. Construct mock-up panels or areas as indicated to demonstrate the ability to cast concrete for concrete layout, banding or detail to achieve shape, color, and textured finish required.
   6. Continue to cast mock-ups until acceptable mock-ups are produced. Accepted mock-ups shall be the standard for color, texture, finish, and workmanship for the work of this section.
   7. Demonstrate in the construction of the mock-up form work the sealer material, form release agent, and curing materials and methods to be used.
   8. Use the same concrete mixes and placement procedures, accepted in mock-ups, in the final work, unless otherwise directed by the Owner.
   9. Protect accepted mock-ups from damage until completion and acceptance of the work represented by the mock-up.
   10. Remove mock-up panels at completion of project, as directed by the Owner.

D. Source of materials: Utilize the same source, stock, or brand of concrete materials for each class or mix of concrete which is to be exposed. Do not interchange materials or mixes until an additional mock-up shows that uniformity in finish texture and color as compared to original mock-up will be maintained. If necessary, obtain and stockpile materials in sufficient quantity to ensure continuity and uniformity.

PART 2 - PRODUCTS

2.1 CONCRETE MIX

A. Mixes shall result in concrete to match approved samples.

B. Mix color additives in accordance with manufacturer's instructions until color additives are uniformly dispersed throughout mixture and disintegrating bags, if used, have completely disintegrated or their remnants are removed.

C. Mix in admixtures of quantities specified and in accordance with manufacturer's instructions; maintain consistent quantities throughout job.

D. Maintain water content as constant as possible; use only fresh, clean and potable water.

E. Control slump (4") to maintain constant color; if greater slump is required, use water-reducing or super-plasticizing admixture; do not add water.

F. Do not retemper mix or add water in field.

2.2 SPECIALTY AGGREGATES

A. Must adhere to ASTM C33

B. Type: Fine-graded silica carbide

C. Size: 16/36

D. Application rate: 0.20 to 0.25 pounds per square foot

2.3 COLOR ADMIXTURE:

A. Must adhere to ASTM C979; do not use calcium chloride admixtures.

B. Color admixture shall be of a type and quality which will not adversely affect workability, setting, or strength of concrete. Color pigments shall consist of chemically inert, non-fading, alkali-fast mineral oxides, finely ground and specially prepared for the use in both cement and mortar.

C. Mix design shall conform to manufacturer's recommendations, and directions of the Owner's Representative to achieve desired color. Strictly monitor additive/cement ratio throughout job to ensure uniform color.

D. Shall be factory-formulated and packaged in one cubic yard dosage increments, preferably in pre-measured mix-ready disintegrating bags.

E. Manufacturer: Davis Colors or approved equal.

F. Colors:
   1. Miami Buff #5447
   2. Carbon #8084

2.4 SURFACE RETARDER

A. Must comply with ACI 303.1 and ASTM C494.

B. Manufacturer: Dayton Superior TopCast or approved equal.

C. Apply in accordance with manufacturer's recommendations.

PART 3 - EXECUTION

3.1 FINISHES

A. See drawings for finish schedule.

B. All finishes shall be consistent throughout and shall match approved mock-up and be per product instructions, if used.

C. Where finishing is performed before end of curing period, concrete shall not be permitted to dry out and shall be kept continuously moist from time of placing until end of curing period, or until curing membrane is applied.

D. Broom Finish:
   1. Pull broom across freshly floated concrete to produce medium texture in straight lines perpendicular to main direction of travel.
   2. Do not dampen brooms.

E. Trowel Finish:
   1. Provide smooth surface; hard-trowel to densify surface.
   2. Do not over-trowel or begin troweling late.
   3. Hand-trowel: use steel trowel.
   4. Machine-trowel: Use steel-reinforced plastic or steel trowel blades.

F. Abraded/Retarded Surface:
   1. Utilize Surface Retardant per manufacturer's recommendations.
   2. Standard TopCast finish gradation applies; adhere to final finish exposure size as closely as possible.

3.2 APPEARANCE TOLERANCES

A. Appearance: Minor variations in appearance of integrally colored concrete that are similar to natural variations in color and appearance of uncolored concrete are acceptable.

3.3 CLEANING

A. Efflorescence: Remove efflorescence as soon as practical after it appears and as part of final cleaning.

B. Use least aggressive cleaning techniques possible.

C. Do not use muriatic or hydrochloric acid on integrally colored concrete.

D. If proprietary cleaning agents are used, pre-wet surface, test cleaning agent on small, inconspicuous area, and check effects prior to proceeding. At walls, begin cleaning at top and work downward. Thoroughly rinse surface afterward with clean water. Follow cleaner manufacturer's instructions.

3.4 DEFECTIVE CONCRETE

A. Modify or replace concrete not conforming to required color, texture, levels and lines, details and elevations.

B. Repair or replace concrete not properly finished or of the specified type.

3.5 FIELD QUALITY CONTROL

A. Field inspection and testing will be performed under provisions of Section 32 13 13.

3.6 PROTECTION

A. Protect finished work under provisions of Section 32 13 13.

B. Immediately after placement, protect concrete from premature drying, excessively hot or cold temperatures, and mechanical injury.

C. Maintain concrete with minimal moisture loss at relatively constant temperature for period necessary for hydration of cement and hardening of concrete.

D. Defer to manufacturer's recommendations when curing concrete containing specialized or proprietary additives; confirm process with Owner's Representative.

3.7 CLEANING

A. When desired finish is achieved, wash and rinse exposed aggregate surface with water or with trisodium phosphate and water, if necessary.

PART 4 - MEASUREMENT AND PAYMENT

A. Refer to Section 01 22 00, Part 4, regarding measure and payment.

B. Work of this Section is considered incidental to work under other payment items and no separate measurement and payment will be made to the Contractor for Work of this Section. Work of this section shall include furnishing all labor, materials, tools, equipment, supplies, supervision, and incidentals necessary as described by the Contract Documents.

END OF SECTION

This page intentionally left blank.

SECTION 32 15 00
DECOMPOSED GRANITE PAVING

PART 1 - GENERAL

1.1 GENERAL CONDITIONS

A. The Conditions of the Contract and Division 1 apply to this section as fully as if repeated herein.

1.2 SUMMARY

A. The requirements of the General Conditions, Supplementary General Conditions, and Special Conditions of the Contract, and of Division 1, General Requirements shall apply to all work of this Section with the same force and effect as though repeated in full herein.

B. Work included: Provide decomposed granite paving, complete as shown, and as specified.

C. Related work:
1. Sub-ballast and Aggregate Base Courses – Section 34 11 27
2. Irrigation System – Section 32 80 00
3. Planting – Section 32 93 00

1.3 REFERENCES

A. Standard Specifications - Standard Specifications of the State of California, Business and Transportation Agency, Department of Transportation, CalTrans

B. ASTM - American Society for Testing and Materials

1.4 DEFINITIONS

A. Percent Compaction: ASTM D1557, percentage of the maximum in-place dry density of the same material as determined by Soils Engineer.

1.5 SUBMITTALS

A. Product Data: Manufacturer's current catalog cuts and specifications for decomposed granite and stabilizer.

B. Samples: Half a pound for each size and color range of decomposed granite.

C. Mock-up: 6 foot by 6 foot sample, full depth to match finish condition.

D. Test Reports: Certified copies of field tests of compressive strengths of decomposed granite paving.

1.6 QUALITY ASSURANCE

A. Qualifications: Submit certified documentation of successful experience of no less than 3 years in the installation of similar crushed stone paving.

1.7 DELIVERY, STORAGE, AND HANDLING

A. Protect from contamination with foreign materials. Isolate stockpiles to prevent mixing of different aggregate grades. Prevent contamination with organic materials.

1.8 SITE CONDITIONS

A. Environmental Requirements: Do not install decomposed granite or aggregate surfaces during rain or while sub-base is wet from rain.

1.9 SEQUENCING

A. Acceptance: Do not install work under this section prior to acceptance of sub-grade preparation under another section.

B. Coordination: Coordinate with other trades to insure the following:
   1. Irrigation sleeving: To be placed prior to placement of aggregate base.

1.10 MAINTENANCE

A. Service: Immediately repair all damage to the work as the result of weather or traffic conditions. Report all damage resulting from work of other trades after acceptance of decomposed granite or other aggregate surface work. Repair to match adjacent undisturbed work.

PART 2 - PRODUCTS

2.1 MATERIALS

A. Decomposed Granite:
   1. 1/4" Minus Aggregate Surface:

Screen Size	Passing
3/8"	100
No. 4	90
No. 8	71
No. 16	55
No. 30	42
No. 50	31
No. 100	21
No. 200	13

   2. Color:
      a. At center of TOD Pad/Field: Graphite Gray Fines
      b. All other DG: Desert or California Gold, unless otherwise noted on drawings.
   3. As supplied by Southwest Boulder and Stone (877-792-7625) or approved equal.

B. "Rock Mulch" Paving
   1. At water feature, monument sign planters and building planters:
      a. Mexican Black Beach Pebbles
      b. Color: Charcoal/black
      c. Size: 1/2 inch to 1 inch

C. "Coarse/Utility Gravel" Paving
   1. Crushed Stone gravel: ballast/subgrade material per Section 34 11 27 Sub-ballast and Aggregate Base Courses; submit sample for review and approval.

D. Non-toxic organic decomposed granite binder – colorless, odorless, naturally binding stabilizing powder.

E. Landscape Edging
   1. Heavy Duty Straight Profile Edging: Permaloc ProSlide, 13/16" x 5.5", extruded aluminum, in corrugated straight profile, as manufactured by Permaloc Corporation or approved equal.
   2. Section shall have loops on side of section to receive stakes spaced approximately 3 feet apart along its length.
   3. Thickness: 1/8" gage section at 0.055" minimum thick with 0.26"exposed top lip and 3/16" gage section at 0.099" minimum thick with 0.298" exposed top lip.
   4. Length: 16-foot sections
   5. Connection Method: Section ends shall slide together with a telescoping stakeless design.
   6. Stake: 12" long extruded aluminum stake, 0.125". Stakes to interlock into section loops.

7. Finish: Natural Mill Aluminum

2.2 EQUIPMENT

A. Mixing Equipment: Pug mill with a weight belt feeder.

B. Compaction Equipment: Power roller with weight between 1 and 5 tons.

2.3 ACCESSORIES

A. Water: Fresh, clean, potable water as available from the Owner. Transport as required.

PART 3 - EXECUTION

3.1 EXAMINATION

A. Sub-grades shall have been rough graded to within 1/10 foot of finish grades less depth of decomposed granite paving.

B. Verify that concrete paving and irrigation sleeving have been installed and accepted under another Section prior to commencement of work.

3.2 PREPARATION

A. Compaction: After completion of soil sterilization, compact sub-grade to minimum 90% compaction.

3.3 INSTALLATION

A. Stabilized Decomposed Granite Paving:
   1. Lines and Levels:
      a. Install stabilized decomposed granite work true to grade, properly coinciding with adjacent work and elevation. Install in maximum 2” lifts.
      b. Provide a finished surface uniform in texture and appearance. Do not permit finished work to vary more than 1/8” in 10 feet from true profile and cross section.
   2. Mixing:
      a. General: Paving shall consist of a mixture of decomposed granite, stabilizer, thoroughly and continuously mixed with a pug mill. A bucket mix or rototiller is not acceptable. Mix at a rate of 12 pounds (pedestrian loading) or 14 pounds (vehicular loading) of stabilizer per ton of crushed aggregate screenings.
      b. Water: Adjust quantity of water added to the mixture to permit maximum compaction of the materials after it is placed on the sub-grade. Moisture shall permeate full depth. After water application, test with a minimum of one core sample per 1,000 square feet; repair sample area to match adjacent section.
   3. Depth: Decomposed granite shall be placed to a minimum 3” compacted depth unless otherwise noted on drawing.
   4. Compacting: Thoroughly compact each 2 inch lift to a minimum 90%. Compact each area with at least 4 passes of the compacting equipment. After compacting, screed smooth. Do not use a wacker or vibratory roller to compact the decomposed granite.
   5. Contaminated Areas: Do not permit mixture to contaminate planting areas. Clean up immediately all mixtures spilled on adjacent paving.
   6. Grading: When surface areas have been rolled and it becomes necessary to add a thin layer of material to bring the surface to grade, the previously rolled or compacted area shall be raked to provide a bond with the added material.
   7. Finish Paving Surface: Provide a uniform texture and color and without a cement mortar film on the exposed surface. Finish surface shall not vary more than 2/100 of a foot from the lower edges when measured with a 10-foot straight edge.
   8. Curing: After installation, keep moist for a period of 7 days. Apply water in a fine mist or spray and in such a manner that it will not damage the finished surface.

9. Damaged or Defective Installation: Repair and replace in accordance with these Specifications at no additional cost.
10. Replacement:
    a. If compression tests of samples fail to meet specified compressive strength, immediately remove and replace decomposed granite paving with material conforming to Specifications.
    b. Pay cost of all work required for removing and replacing the decomposed granite.
11. Keep decomposed granite off of adjacent paved areas.

B. Aggregate (gravel) Paving:
1. Prepare and compact base course insuring all foreign substances and debris are cleared.
2. Spread material in a uniform layer to the depth as shown on drawings.
3. Blading, rolling and tamping of surface shall continue until smooth and free from irregularities.

3.4 FIELD QUALITY CONTROL

A. For each lift, have the testing laboratory verify the degree of compaction. Recompact filled areas until specified compaction is achieved.

B. Testing to be paid by Contractor.

3.5 PROTECTION

A. Protect the paving against traffic, injury or defacement, or damage (by rain) and subsequent construction operations until Final Acceptance.

PART 4 - MEASUREMENT AND PAYMENT

A. Refer to Section 01 22 00, Part 4, regarding measure and payment.

B. Work of this Section is considered incidental to work under other payment items and no separate measurement and payment will be made to the Contractor for Work of this Section. Work of this section shall include furnishing all labor, materials, tools, equipment, supplies, supervision, and incidentals necessary as described by the Contract Documents.

END OF SECTION

SECTION 32 22 19
TOPSOILING

PART 1 - GENERAL

1.1 SUMMARY

A. Location of work:
   1. Areas within limits of grading and areas outside limits of grading which are disturbed in course of work.

B. Topsoiling:
   1. Soil preparation for planted areas and finish grades.

1.2 RELATED WORK

A. Section 31 11 00 – Site Clearing

B. Section 31 20 00 – Earthwork

C. Section 31 22 00 – Rough Grading

D. Section 32 93 00 – Planting

1.3 QUALITY ASSURANCE

A. Finish grading tolerance:
   1. 0.1 foot plus/minus from required elevations.

1.4 JOB CONDITIONS

A. Verify amount of topsoil stockpiled and determine amount of additional topsoil, if necessary to complete work.

1.5 DEFINITIONS

A. Finish Grade: Elevation of finished surface of planting soil.

B. Topsoil Type A: Soil produced off-site by homogeneously blending mineral soils or sand with stabilized organic soil amendments to produce topsoil or planting soil

C. Topsoil Type B: On-site salvage topsoil suitable for reuse in planted areas.

D. Planting Soil: Native or imported topsoil or surface soil modified to become topsoil, mixed with soil amendments and fertilizers.

E. Subgrade: Surface or elevation of subsoil remaining after completing excavation, or top surface of a fill or backfill, before placing planting soil.

F. Topsoil: See Part 2 – Products.

1.6 SUBMITTALS

A. Product data:
   1. Fertilizers, including application rates

B. Samples for verification:
   1. 1/2 cubic foot compost
   2. 1/2 cubic foot of each imported topsoil

C. Product certificates: For each type of manufactured product, signed by product manufacturer, and complying with the following:
   1. Manufacturer's certified analysis for standard products
   2. Analysis of other materials by a recognized laboratory made according to methods established by the Association of Official Analytical Chemists, where applicable

D. Qualification Data for testing agencies.

E. Material Test Reports:
   1. Compost Analysis: Provide analysis for one representative sample of compost minimum 30 days prior to compost being delivered to project site, and an analysis for one representative sample of compost delivered to the project site.

F. Delivery Slips: Provide delivery slips as proof of shipment of specified materials.

1.7 QUALITY ASSURANCE

A. Compost Testing Laboratory Qualifications: An independent laboratory with the experience and capability to conduct the testing indicated following U.S. Composting Council Seal of Testing Assurance procedures, or equivalent.

B. Compost Analysis: Provide documentation from supplier that compost has reached a monitored temperature of 140° F for at least one week.
   1. Test representative sample(s) of compost for the following parameters: pH, soluble salts, percent moisture, percent organic matter, particle size, and nutrient content, including: Nitrogen (N), Phosphorus (P), Potassium (K), Calcium (Ca), and Magnesium (Mg).
   2. Test compost for maturity. Provide Carbon-Nitrogen ratio.

1.8 DELIVERY, STORAGE AND HANDLING

A. Deliver packaged materials in manufacturer's unopened containers fully identified by name, brand, type, weight and analysis.

B. Store and handle packaged materials to prevent damage and intrusion of foreign matter.

C. Store stockpiled topsoil in area designated by Owner's Representative. Provide erosion control measures for stockpiled topsoil on site to prevent contamination of the soil. Refer to Division 31 Section "Grading" for control of dust and erosion.

1.9 SOIL AMENDMENT BID QUANTITIES FOR SHRUB AREAS

A. Amount per 1000 square-feet:

1. 100 lbs	Dolomite limestone 'Dolpril'
2. 1.0 lbs	Nitrogen
3. 1.5 cubic yard	Compost

1.10 SITE CONDITIONS

A. Topsoil placement and soil preparation shall not take place during periods where saturated soil or surface water is present in work areas.

1.11 COORDINATION

A. Coordinate soil preparation with Division 31 Section 31 22 00 "Earth Moving" such that topsoil, soil amendments and fertilizers are incorporated into ground fill areas in specified lifts to specified depths below finish grade for both planting beds. Topsoils shall be amended per recommendations of the Soils Testing Laboratory.

B. Coordinate work with installation of other site work, including irrigation and planting.

PART 2 - PRODUCTS

2.1 TOPSOIL

A. Topsoil Definition: ASTM D 5268; natural or cultivated surface-soil layer containing organic matter and sand, silt, and clay particles, conforming to USDA classification for Loam or Sandy Loam; friable, pervious, and black or a darker shade of brown, gray, or red than underlying subsoil; reasonably free of subsoil, clay lumps, gravel, and other objects more than 1" in any dimension; and free of weeds, roots, and other deleterious materials, with the following physical properties:
   a. Organic Matter: 6 percent minimum
   b. Sodium Adsorption Ratio (SAR): less than 6.0
   c. Saturation Extract concentration for Boron: less than 1.0
   d. pH range of from 6 to 8 (plus 0, minus 0.5)
   e. Saturation Extract Conductivity: less than 4.0 dS/m @ 25° C as determined in a saturation extract
   f. Non-soil components: less than 1 percent by volume
   g. Heavy metal concentrations: below the WSDA per year load limit
   h. Minimal weed seed
      1) If regenerative noxious weeds (including, but not limited to, quack grass, nut grass, and horsetail) are present in the soil, all resultant growth including roots shall be removed throughout one-year period after acceptance of work at no additional cost to Owner.

B. Topsoil Type B for general landscape work: Reuse Type B surface soil stockpiled on-site. On-site topsoil shall meet the definition of topsoil in the paragraph above. Clean surface soil of roots, plants, sod, stones, clay lumps, and other extraneous materials harmful to plant growth. Ensure no contamination of the soils occurs during earthwork and grading, and that the soil remains friable and free of debris. No on-site topsoil may be removed from the site.

C. Import Topsoil Type A for general landscape work: Where quantities of on-site topsoil are not sufficient, supplement on-site topsoil with imported or manufactured topsoil from off-site sources. Obtain topsoil displaced from naturally well-drained construction or mining sites where topsoil occurs at least 4" deep; do not obtain from agricultural land, bogs or marshes. Import topsoil shall meet the definition of topsoil above.

2.2 INORGANIC SOIL AMENDMENTS

A. Dolomitic Lime: Natural, agricultural limestone (calcium and magnesium carbonate) containing a minimum of 20 percent calcium and 11 percent magnesium and as follows:
   1. Screen Analysis: 100 percent passing through No.30 sieve; 70 percent passing through No. 100 sieve; and minimum 30 percent passing through No.325 sieve.
   2. Provide lime in form of granulated, prilled, dolomitic limestone, 'DoloPril' by Pacific Calcium, Inc., (877) 571-3555, or approved equal.

2.3 ORGANIC SOIL AMENDMENTS

A. Compost: Well-decomposed, commercially manufactured, stable, and weed-free organic matter, pH range of 5.5 to 8.0; 100% passing through 1-inch sieve; soluble salt content of 5 to 10 decisiemens/m; not exceeding 0.5% inert contaminants and free of substances toxic to plantings; and shall conform as follows:
   1. Tested, at minimum, every six months for noxious weeds
   2. Organic matter source (feedstock): Agricultural, food, or industrial residuals; biosolids; yard trimmings; or source-separated or compostable mixed solid waste
   3. Organic Matter Content: 60 to 80% of dry weight as determined by ash method
   4. Moisture Content: 35 to 55% by weight

5. Free of refuse (less than 1% by dry weight), plastics, contaminants or any material toxic to plant growth
6. Processed to meet U.S. Composting Council's Seal of Testing Assurance Program, or equivalent
7. Carbon to Nitrogen Ratio: 40:1 or lower
8. Composted for a minimum of 9 months and reach a monitored temperature of 140° F for at least one week
9. Available Suppliers:
    a. Locally available suppliers conforming to standards listed above

2.4 MISCELLANEOUS PRODUCTS

A. Herbicide: "Round-Up" by Monsanto, or approved equal

PART 3 - EXECUTION

3.1 EXAMINATION OF SITE CONDITIONS

A. Examine for site conditions that will adversely affect execution, permanence, quality of work, and survival of plant material.

B. Verify that subgrades and slopes of planting bed areas are acceptable to Owner's Representative prior to commencing work of this Section.

C. Should the Contractor find any discrepancies between the Drawings and the physical conditions, inform the Owner's Representative immediately for clarification.

D. Begin work required under this Section only after conditions are satisfactory.

3.2 PREPARATION

A. Protect structures, utilities, sidewalks, pavements, and other facilities, and existing plantings from damage caused by soil preparation operations.

B. Prepare soils at a time when moisture conditions will permit proper cultivation.

C. Remove stones over 1-inch diameter, sticks, roots, mortar, concrete, rubbish, debris, and all materials harmful to plant life, and legally dispose of them off Owner's property.

D. Remove or spray as required to eradicate noxious weed growth and roots.
    1. Achieve complete removal or kill of all weeds within all areas receiving new planting.
    2. In planting beds, kill achieved by working soil is permissible for annual non-noxious broad-leaf type weeds.
    3. Apply contact herbicide over all areas of weed or grass growth within landscaped area to eradicate weed growth and roots. Apply in two applications at manufacturer's maximum recommended rate, as follows:
        a. First application: Apply 7 days prior to performing soil preparation.
        b. Second application (to kill new vegetation): Apply after soil preparation has been completed and minimum of 48 hours prior to planting.
        c. Observe manufacturer's recommended period prior to working in treated areas.

E. Locate and securely mark or flag irrigation sprinkler heads, area drains, catch basins, clean outs, manholes, valve boxes, and other site improvements not extending above finish grade.

F. Provide erosion-control measures to prevent erosion or displacement of soils and discharge of soil-bearing water runoff or airborne dust to adjacent properties and walkways, in accordance with Division 31 Section "Earthwork".

3.3 SOIL PREPARATION FOR SHRUB BED AREAS

A. This article pertains to those shrub bed areas indicated as “Shrub and Groundcover Planting Areas” on the Drawings where mass plantings of shrubs and groundcover plants are scheduled.

B. Prepare subgrades by excavating and removing soil, rock and other construction material to 12 inches below finish grade. See Division 31 Section “Grading” for excavation and preparation of subgrades.

C. Place 2” topsoil, compost, soil amendments, and fertilizers at indicated rates and rototill thoroughly to a depth of 8”. Place remainder of topsoil, compost, soil amendments, and fertilizers and rototill thoroughly to a depth of 8”, allowing for compaction and natural settlement. Provide minimum 12” depth topsoil in all shrub bed areas.
   1. It is the Contractor’s option to set up a facility on-site for the preparation and amendment of topsoils, instead of preparing and amending the topsoils in place as indicated in the paragraph above.
   2. Set up facility in location as directed by Owner's Representative.

D. Water lightly and allow planting mix to settle. Add additional material at mixture indicated in paragraph above to bring soil level to grades shown on the Drawings with allowance at pavement edges for mulch placement. Provide compaction to 85% relative density or as indicated in Division 31 Section “Grading.”

E. Meet lines, grades and elevations shown, after light rolling and natural settlement. Fine grade shrub and groundcover areas to a smooth even surface with a loose, uniformly fine texture. Rake and drag shrub and groundcover areas to remove ridges and fill depressions to obtain firmness and finish grades preparatory to receiving planting.

F. Remove stones over 1/2" in any dimension, and sticks, roots, rubbish and other extraneous matter.

3.4 SOIL PREPARATION UNDER EXISTING TREES

A. Strip vegetation beneath canopy of existing trees.

B. Lightly rake areas and add amended topsoil to meet proposed grades.

3.5 FINE GRADING

A. Finish grade after full settlement including mulch, shall be 1 inch below tops of curbs, walks, or existing grades in shrub areas and 3/4" lower in seeded areas.

B. Slope all areas to prevent puddling and drain surface water toward catch basins, drains, curbs, or off-site as shown on Drawings.

C. Soil in all areas shall be thoroughly settled, with a smooth surface free of humps and hollows, and shall be firm enough to resist undesirable impressions when stepped upon.

D. Use levels, screens, drags, or any other equipment necessary to establish and verify grades and surfaces.

E. See Division 32 Section “Plants and Planting” for mulch placement.

3.6 CLEAN-UP

A. Clean up excess materials and debris from project site upon completion of work or sooner if directed by the Owner's Representative.

B. Leave in neat and tidy condition daily.

3.7 DISPOSAL

A. Disposal: Remove surplus soil and waste material, including excess subsoil, unsuitable soil, trash, and debris, and legally dispose of them off Owner's property.

PART 4 - MEASUREMENT AND PAYMENT

A. Refer to Section 01 22 00, Part 4, regarding measure and payment.

B. Work of this Section is considered incidental to work under other payment items and no separate measurement and payment will be made to the Contractor for Work of this Section. Work of this section shall include furnishing all labor, materials, tools, equipment, supplies, supervision, and incidentals necessary as described by the Contract Documents.

END OF SECTION

This page intentionally left blank.

SECTION 32 80 00
IRRIGATION SYSTEM

PART 1 - GENERAL

1.1 DESCRIPTION

A. Relevant work includes: supply and installation of a complete, automatically-controlled irrigation system, including piping, backflow preventer, drip emitters, valves, controls, control wiring, fittings, electrical connections and necessary accessories, as well as restoration of areas of the site disturbed in the process of installation to pre-construction condition.

1.2 QUALITY ASSURANCE AND REQUIREMENTS

A. Obtain and pay for any and all permits and inspections as required.

B. All local, municipal, state and federal laws and regulations governing or relating to any portion of this work are hereby incorporated into and made part of these specifications, and their provisions shall be carried out by the Contractor. Anything contained within these specifications shall not be construed as conflicting with any such rules and regulations, or the requirements of the same. However, when these specifications and drawings call for or describe materials, workmanship, or construction of a better quality or higher standard than is required by such regulations, the provisions of these specifications and drawings shall take precedence.

C. Explanation of Drawings:
   1. Due to the scale of drawings, it is not possible to indicate all offsets, fittings, sleeves, etc. which may be required. Carefully investigate the structural and finish conditions affecting this work and plan work accordingly, furnishing such offsets, fittings, sleeves, etc as may be required to meet site conditions. Drawings are generally diagrammatic and indicative of the work to be installed. Install the work in such a manner as to avoid conflicts between irrigation systems, planting and architectural features, existing and proposed.
   2. Furnish and install all work called for on the drawings by notes or details whether or not specifically mentioned in the specifications.
   3. Do not install the irrigation system as shown on the drawings when it is obvious in the field that obstructions, grade differences or discrepancies in the area dimensions exist that might not have been considered in engineering. Bring such obstructions or differences to the attention of the Owner's Representative. Failure to do so deems the Contractor responsible for any revisions necessary.
   4. Do not purchase or install materials as noted in legend on drawing when it is obvious there is an oversight or discrepancy. Failure to obtain prior material approval may result in rejection by the Owner's Representative. The Contractor will be responsible for any revisions necessary due to his failure to bring material discrepancies to the attention of the Owner's Representative, or failure to comply with material submittals.
   5. Coordinate as necessary the work of this Section with the work of other allied trades.
   6. It is the intent of the drawings and specifications to describe a complete irrigation system providing uniform water coverage. If the plans or specifications appear in any way to be incomplete, misleading, conflicting, or subject to misinterpretation, it is the Contractor's responsibility to bring these concerns to the Owner's Representative's attention before bidding. If the Contractor fails to do so, the Contractor must accept the Owner's Representative's interpretation and any potential related financial impact that may occur.

D. Electrical wiring, controls, motors, and devices shall be Underwriters Laboratories listed and labeled UL.

1.3 DELIVERY, STORAGE, AND HANDLING

A. Deliver materials in original rolls, packages, cartons, and containers with the name of manufacturer, brand and model. Inspect materials delivered to the site for damage. Transport PVC pipe in a vehicle which allows the length of pipe to lie flat, to avoid undue bending or concentrated external load at any point. Any section of pipe dented or damaged must be discarded or, if installed, must be replaced with new, undamaged pipe.

B. Store materials on site in enclosures or under protective covering; store plastic piping and rubber gaskets under cover out of direct sunlight. Do not store materials directly on ground. Keep inside of pipes and fittings free from dirt and debris.

C. Handle and carry pipe, fittings, valves and accessories in such a manner as to ensure delivery to trench in sound, undamaged condition. Do not drag pipe.

1.4 SUBMITTALS

A. Material List:
   1. Furnish the articles, equipment, materials or processes specified by name in the drawings and specifications. Substitution is allowed only with prior written approval of the Owner's Representative.
   2. Submit complete material list prior to performing any work. Materials list shall include the manufacturer name, model number and description of all proposed materials and equipment.
   3. Equipment or materials installed or furnished without prior approval of the Owner's Representative may be rejected and the Contractor required to remove such materials from the site at the Contractor's own expense.
   4. If equipment proposed for use is as specified, a material list only is required and it is unnecessary to submit manufacturer descriptive catalogs with submittal.

B. Record Drawings:
   1. Provide and maintain up-to-date and complete project record documents (set of prints). Update daily and show all changes for the original drawings and specifications, as well as exact "as-built" locations, and sizes and types of equipment. Prints for this purpose may be acquired from the Owner's Representative. Keep this set of drawings on site and use only for such recording.
   2. These drawings shall also serve as work progress prints and shall be the basis for measurement and payment for work completed. Drawings must be available at all times for site reviews, in a location designated by the Owner's Representative. Should the record progress prints be unavailable for review or fail to be up-to-date at the time of any site reviews, it will be assumed no work has been completed and the Contractor will be assessed the cost of that site visit at the current billing rate of the Owner's Representative. No other inspections will take place until payment for that assessment has been received.
   3. Make neat and legible notations daily on the record progress prints as the work proceeds, showing the work as actually installed. Should equipment location differ from plan, indicate the new location in a graphic manner, matching the original symbols in the irrigation plans' legend.
   4. Before the final site review, transfer all information from the record prints to computer-generated reproducible drawings (or other approved method), and submit these reproducible drawings along with related CAD disk to the Owner's Representative for approval prior to preparing controller chart.
   5. Dimension the following locations from two (2) permanent points of reference (building corners, sidewalks, benchmarks, road intersections, etc.):
      a. Connection to existing water lines
      b. Connection to existing electrical power supply
      c. Gate valves
      d. Sprinkler pressure line routing and directional turns (dimension maximum 100 feet along route)
      e. Automatic controller
      f. Remote control valves
      g. Control wire routing

h. Quick coupling valves
i. Master valve
j. Flow sensor
k. Moisture sensors
l. Lightning protection/grounding rod, plate, etc
m. Backflow prevention units/strainers
n. Tracer wires (main line routing)
o. Irrigation water meters
p. Electrical meters

6. On or before the date of the final site review, deliver the updated and completed reproducible drawings to the Owner's Representative. Delivery of these drawings does not relieve the Contractor of responsibility for furnishing any required information that may have been omitted from the prints.

C. Controller Charts:
1. Record drawings must be approved by the Owner's Representative before controller charts are prepared.
2. Provide two (2) controller charts for each controller installed.
3. The chart shall show the area controlled by the automatic controller and show location of all valves, lateral lines, and route of the control wires.
4. The chart shall be a clear, legible photocopy or black line print using contrasting colors to differentiate areas of coverage for each hydrozone.
5. Charts shall be the maximum size the controller door area will allow. If controller sequence is not legible when the drawing is reduced, the drawing shall be enlarged to a size that is readable and placed, folded, in a sealed plastic container, inside the controller door.
6. When completed and approved, hermetically seal the chart between two (2) pieces of plastic (thickness of each piece being min ten (10) mils).
7. Charts must be completed and approved prior to final inspection of the irrigation system.

D. Operation and Maintenance Manuals:
1. Prepare and deliver to the Owner's Representative within ten (10) calendar days prior to completion of construction two (2) hardcover 3-ring binders containing the following information:
a. Index sheet stating Contractor's address and telephone number
b. List of equipment with names, addresses, and telephone numbers of local manufacturer representatives
c. Catalog and parts sheets regarding material and equipment installed under this contract
d. Warranty statement of all materials utilized
e. Complete operating and maintenance instruction on all major equipment.
2. In addition to these maintenance manuals, instruct Owner's maintenance personnel regarding operation of major equipment and show written evidence to the Owner's Representative at the conclusion of the project that this service has been rendered.
3. As-built drawings of installed irrigation system with duration and flow rates of each station

1.5 JOB CONDITIONS

A. Connect to irrigation tap provided by mechanical installer or existing (verify in field).

B. Backflow preventer and meter provided by mechanical installer.

C. Verify location of existing and new underground utilities and structures.

D. Protect existing utilities and structures and replace if damaged.

1.6 SUBSTITUTIONS

A. To request substitution of any equipment or material in lieu of equipment or material listed on the drawings and in the specifications, provide the following information to the Owner's Representative for approval:
1. Statement indicating the reason for making the substitution, using a separate sheet of paper for each requested substitution.

2. Descriptive catalog literature and performance charts (if applicable) for each requested substitution.
3. Hydraulic calculations for proposed substitution, as applicable.
4. Itemized list of proposed substitutions, noting differences in material and labor costs between substitution and item originally specified.
5. Written confirmation that Owner's Representative has received any credit resulting from approved substitution.

B. Approval of any substitution or alternate will be based on information and/or samples provided by the Contractor.

C. Responsibility for the total performance of any substitution to equal or surpass the item originally specified in every respect rests with the Contractor.

D. If the Owner's Representative determines the substitution has proven to be unsatisfactory, it shall be removed and replaced with the originally specified item as part of the work of this contract (both materials and labor).

E. The Owner's Representative shall be solely responsible for accepting or rejecting any substitution as equal to equipment and materials listed on the irrigation drawings and specifications.

1.7 WARRANTY

A. The general and supplementary conditions of these specifications shall be filed with the Owner's Representative prior to acceptance of the irrigation system.

B. Manufacturer warranties do not relieve the Contractor of his liability under the warranty. Such warranties only supplement the Contractor's warranty.

C. Include a copy of the warranty form in the Operations and Maintenance Manual, delivered to the Owner's Representative.

D. The entire irrigation system shall be warranted to be free from defects in material and workmanship, and installed in accordance with this Notice to Contractors. The Contractor shall be required to repair or replace any defects in material or workmanship which may develop within 1 calendar year from the date of acceptance; ordinary wear and tear and unusual abuse or neglect excepted. Further, the Contractor shall be required to make any necessary repairs within 24 hours of notification at no cost to the Owner. If the Contractor or his agent fail to make such repairs within the stipulated time, the Department shall make such repairs or have repairs made by a third party, and bill the Contractor for all expenses that accrue from making such repairs.

E. If settlement occurs along the mainline or lateral lines, at valve boxes, or other irrigation related appurtenances within one (1) calendar year from date of acceptance, and adjustments in pipes or valves are required to bring system, planting or paving to the level of the permanent grade, the Contractor shall make all adjustments without additional cost to the Owner, including complete restoration of any planting, paving or other site improvements damaged as a result of settlement.

1.8 TEMPORARY REPAIRS

A. The Owner reserves the right to make temporary repairs as necessary to keep the irrigation system equipment in operating condition. The exercise of this right by the Owner will not relieve the Contractor of responsibilities under the terms of the guarantee as herein specified.

PART 2 - PRODUCTS

2.1 MATERIALS

A. Use only new materials of manufacturer and type noted on drawings and as specified herein, or approved equal.

2.2 PIPING, FITTINGS, AND WIRING

A. Pipe Schedule:

1. Pressure mainline piping and fittings 4-10: class 150, DR18, C900 PVC
    a. Pacific Western "Twin Seal" joints or approved equal
    b. All fittings to be ductile iron, AWWA C153, compact configuration with mechanical joints
    c. All fittings to pipe joints shall be restrained with an EBAA 2000 series "Megalug" retainer gland wrench.
2. Pressure mainline piping and fittings 2-3": Class 315 solvent weld type PVC
3. Pressure mainline piping and fittings to 1½": Schedule 40 PVC
4. Pressure mainline piping and fittings at surface: Schedule 40 Galvanized steel
5. Non-pressure lines (buried): Schedule 40 PVC; ½" pipe not permitted
6. Non-pressure lines (drip, surface): PE supply lines, UV resistant
7. Non-pressure lines (drip): PE supply lines
8. Sleeves or conduit lines 2½" or larger: Class 200 PVC
9. Sleeves or conduit lines 2" or smaller: Schedule 40 PVC

B. Polyvinyl Chloride (PVC) pipe:
1. NSF/ANSI 14, seal of approval for potable water.
2. PVC 1120 Schedule 40:
    a. Solvent weld, ASTM-D2241, Class 200, SDR 21.
    b. Pipe shall be manufactured from virgin PVC compound in accordance with ASTM D1784 or ASTM D2241, with hydrostatic design stress rating not less than 2000 PSI.
3. Mark pipe continuously and permanently with manufacturers name or trademark, nominal size, schedule or class of pipe, date of extrusion, and working pressure.
4. Provide integral-colored purple pipe for non-potable water use.
5. Pipe connections:
    a. Solvent welded socket type: ASTM-D2466, Schedule-40.
    b. PVC threaded fittings: ASTM-D2464.
    c. Rubber gaskets: AWWA-C111
    d. Side-gated, injection molded PVC, complying with ASTM D1784
    e. PVC nipples: Schedule 80, with molded threads.
    f. Provide integral-colored purple fittings for non-potable water use.
    g. Solvent cement and primer for PVC solvent-weld pipe and fittings shall be of type and installation method prescribed by manufacturer.

C. Polyethylene (PE) plastic pipe:
1. Nominal sized ½" or smaller
2. Low-density, UV resistant, linear PE tubing
3. 80 PSI pressure rating at 73° F
4. Mark pipe continuously and permanently with manufacturer's name or trademark, nominal size, schedule or class of pipe, date of extrusion, and working pressure.
5. Pipe Connections:
    a. Molded, UV resistant plastic
    b. Each fitting shall be of the same manufacturer as the PE pipe and drip tubing and shall be available in the following end configurations
        1) Compression-type fitting
        2) Barbed fitting
        3) Male pipe threads (MPT) with barbed or compression type fittings
        4) Female pipe threads (FPT) with barbed or compression type fittings
        5) PVC plastic insert type with stainless steel pinch ear or screw type clamp

D. Electrical Wiring:
1. 12-gauge UF wire, UL-labeled for direct underground burial, 1/16" minimum insulation
2. Control wire connections shall be made with 3M brand DBY or DBR direct burial splice kits, or approved equal.
    a. Kit shall consist of a one-piece malleable plastic bulb body with internal locking fingers, filled with re-enterable gel sealant anad Scotchlok Electrical Spring Connector.
    b. Connector shall be flame-retardant PVC insulator with a steel spring and shell within.

c. Tube material shall be polypropylene; gel material shall be hixotropic calcium organic complex.

3. Make connections between controller and remote control valves using direct burial 12-gauge AWG-UF 600-volt copper wire. Color code wires as follows:

WIRE COLOR	STATION	CONTROLLER	TAPE COLOR
red	1, 11, 21, 31	A	red
yellow	2, 12, 22, 32	B	yellow
blue	3, 13, 23, 33	C	blue
green	4, 14, 24, 34		
orange	5, 15, 25, 35		
tan	6, 16, 26, 36		
purple	7, 17, 27, 37		
pink	8, 18, 28, 38		
brown	9, 19, 29, 39		
gray	10, 20, 30, 40		

4. Wire shall be minimum #12 UF 600 volt underground wiring; common wire shall be white, all other wires red, yellow, blue, green, orange, tan, purple, pink, brown or gray.

E. Tracer Wires:
1. Install No. 14 polyethylene (PE) coated copper tracer wire with all non-metallic irrigation main lines, Paige P7079D or approved equal.

F. Communication cables:
1. Cable shall consist of one twisted pair of #14 AWG stranded wire with Polyethylene insulation.
2. Cover the twisted pair with helical wrap of mylar/aluminum foil, with foil on outer surface.
3. Cover the foil with a braided and tinned copper shield.
4. Cover the shield with an outer black Polyethylene jacket.
5. Cables to be Arizona Electrical Fabricators 9516-2SP or equivalent.
6. Cable shall be installed inside dedicated 1½" PVC conduit.

2.3 VALVES & VALVE BOXES

A. Gate Valves:
1. Valves 3" and Smaller:
   a. ASTM B62
   b. Brass/bronze body, 150 pound saturated steam rated with screwed joints, non-rising stem, screwed bonnet, and solid disc, unless otherwise noted on drawings
   c. Provide with hand wheel
2. Valves 4" and Larger:
   a. ASTM A126, class B
   b. Iron body, 150 pound WOG with flanged joints, non-rising stem, bolted bonnet, and double disc
   c. Equipped with operating nut, or as approved otherwise or noted on drawings.

B. Master Valve:
1. Master valve shall be spring loaded, packless diaphragm activated, normally-open/normally-closed type, equipped with flow control and pressure regulation capabilities when noted on drawing.
2. Install normally-open master valve with a Data Industrial Model 800 LARC box, or approved equal.

C. Pressure-Regulating Valve:
1. Brass/bronze body with threaded ends, reinforced diaphragm, thermal expansion bypass and integral strainer
2. Maximum working pressure of 400 psi

D. Remote Control Valves:

1. Valves shall be spring-loaded, packless diaphragm activated, normally-closed type with brass body, equipped with flow control and pressure regulation capabilities as noted on drawings.
2. Valve solenoid shall be 24 volt AC, 4.5 watt maximum, 500 milli-amp maximum surge, corrosion proof, stainless steel construction, epoxy encapsulated, to form a single integral unit.
3. When valves called for are not equipped with a flow control, provide a ball valve on discharge side of valve.
4. Valve shall be equipped with an internal/external bleeder to permit operation in the field without power at the controller.

E. Valve Boxes:
1. Valve boxes shall be Portland Cement concrete with a cast iron frame and hinged double-toggle locking cover, or molded polyfiber with green colored, non-hinged, bolted cover (purple covers where reclaimed water is used).
2. Inside dimensions of the box shall be approx. 12” x 18” nominal.
3. Armor/Ametek Standard box assemblies, or approved equal.

2.4 BACKFLOW PREVENTION UNIT

A. Backflow preventer shall be designed to operate on a "reduced pressure" principle and be equipped with gate valves and two field test cocks (supply and discharge sides).

B. Pressure regulator at backflow unit shall be a brass/cast iron unit, type and size as noted on drawing.

C. Wye strainers at backflow prevention units shall be 125 pound class cast brass with 40 mesh monel screen, unless otherwise noted on drawing.

D. The backflow enclosure shall be of a vandal and weather resistant nature manufactured entirely of marine grade aluminum alloy 5052-H52, with a wall thickness of 1/8”. The mounting base shall be manufactured entirely of stainless steel. The main housing shall be of solid sheet construction punched on the sides with a rectangular pattern for viewing backflow operation. The length of the enclosure shall be expandable to allow for site adjustment. The enclosure shall have a mounting lip on one end and a locking mechanism on the other end. The mounting base shall be submerged into the concrete a minimum of 2”. Position the enclosure 2½” above the concrete for drainage purposes. The locking mechanism shall be full release type which allows for complete removal of the enclosure from its mounting base without the use of tools. The handle controlling the locking mechanism shall be concealed within the surface of the enclosure and provide for either a single or dual padlock system.

E. Install, per location indicated on drawings, within a secured enclosure – SBBC-40CR by VIT Products, Inc, or approved equal. Obtain location and size approval for enclosure prior to installation.

2.5 FLOW SENSOR

A. Flow sensor size shall be based on the lowest flow demand through the sensor, with the piping size per dimensions noted in construction detail. Verify size of sensor with Manufacturer Representative.

B. Install sensor per manufacturer’s recommendations. Retain a factory-trained representative to check installation and perform start-up services, including adjustment of all equipment. Provide proof of compliance.

2.6 MOISTURE SENSING EQUIPMENT

A. Provide unit and location per drawing
1. Provide low-voltage wires to remote control valve controlled by sensor, #14 minimum.
2. Provide low-voltage wires from each sensor to control panel at sprinkler controller, #14 minimum.

3. At each sensor, provide a 1½“ x 12” PVC pipe with a cap within 2” of sensor, set flush with finish grade, for future locations of unit.

2.7 STRAINER ASSEMBLY

A. Strainer assembly shall be 125-pound class cast brass with 40 mesh monel screen, unless otherwise noted.

2.8 DRIP IRRIGATION COMPONENTS

A. Filters:
   1. "Y" body configuration.
   2. Operating Pressure: 10 to 150 PSI minimum
   3. Filter Screen: 200 mesh, removable
   4. Operating Range: 5 to 30 GPM

B. Valves:
   1. Electrically operated 24 VAC
   2. Operating Range: .20 to 22 GPM
   3. Pressure range: 15 to 150 PSI
   4. Manual ON/OFF control

C. Pressure regulators:
   1. Operating Range: 2 to 22 GPM
   2. Preset to allow only certain water pressures downstream

D. Emitters:
   1. Pressure compensating
   2. Self flushing
   3. Sized to emit specific gallonages of water

2.9 BUBBLERS

A. Hunter RZWS-18-50-CV-R or approved equal
   1. Operating Rate: 0.5 GPM
   2. Locking reclaimed purple cap
   3. Size: 18” long x 3” diameter

2.10 AUTOMATIC CONTROLLER

A. Controller to be fully automatic and capable of operating the required number of stations, flow sensors, master valves, and moisture sensors as designed.

B. Controller shall be pedestal mounted as noted on drawings, in a vandal-resistant housing unit with locking hinged cover – SB-24DSS by VIT Products Inc. or approved equal. Fuse and chassis ground all controller components. Obtain location and size approval for enclosure prior to installation.

C. Hunter I-Core model controller, or approved equal. Controller to have the following features, at minimum:
   1. There shall be 6-station modules that enable the controller to be customized from 6 stations up to 30 stations in the plastic cabinet and up to 42 stations in the metal cabinet and plastic pedestal. The removable station modules shall allow servicing of, and removing of the modules without removing field wires from the controller.
   2. The controller shall be equipped with a rain sensor on-off switch that allows the user to override a sensor that has suspended watering. The controller shall have a programmable rain delay that turns off the controller for a predetermined period of time, from 1 to 180 days. The controller shall have a cycle and soak scheduling capability by station that allows a cycle to be programmed for up to 60 minutes and a soak period to be programmed for up to 120 minutes.
   3. When the learned flow is exceeded during normal operations, the controller shall record a flow alarm event, cease irrigating the corresponding station or stations, and resume irrigation with all other properly-operating stations.

4. The controller shall have four independent programs (A, B, C, and D) with 8 start times per program for programs A, B, and C; and 16 start times for program D for a total of up to 40 daily start times. Any two programs shall have the capability of running concurrently. Watering times shall be available from 1 minute to 12 hours in 1-minute increments per station. There shall be a programmable delay between stations available of up to 9 hours. The controller shall have 4 weekly schedule options: 7-day, 31-day, odd-day and even-day programming. It shall also have a 365-day calendar clock to accommodate true odd-even watering. Operation shall be available in automatic, semi-automatic and manual modes. The front panel of the controller shall be removable and capable of being programmed when not attached to the controller cabinet.
5. The controller shall have a seasonal adjustment feature with 3 different modes that allows station run times to be altered from 0% to 300% by program to compensate for weather changes.
6. The controller shall have a diagnostic feature that provides a visual indication via LED lights that show the current status of sensor activity, station activity and flow activity. Any station or flow alarms shall be report on the LCD display.
7. The controller shall have remote control capability.

PART 3 - EXECUTION

3.1 SITE CONDITIONS

A. All scaled dimensions are approximate. Check and verify all dimensions per Owner's Representative's approval prior to proceeding with work under this section.

B. Exercise extreme care in excavating and working near existing utilities. Coordinate excavations with underground service alert and utility companies. Damage to utilities caused by operations or neglect shall be repaired at Contractor's expense. Check existing utility drawings for locations.

C. Coordinate installation of irrigation materials, including pipe, so there will be NO interference with utilities or other construction, including planting.

D. Carefully check all grades to ensure work on the irrigation system may safely commence.

3.2 PREPARATION

A. Water Supply:
1. The Owner's Representative will provide new meters and pay all costs incurred.
2. Connect irrigation system to water supply points of connection as indicated on the drawings; verify exact location on site.
3. Connections as shown on drawings are approximate. Minor deviations (plus or minus 20 feet) required by actual site conditions shall be a part of this contract.
4. Coordinate connection to meters, water outlets, etc with Owner's Representative and other trades on site.
5. Coordinate pipe crossing hardscapes, walks, etc, with appropriate trades to minimize disturbance to finish product. If a preferable route is noted on site, contact Owner's Representative to discuss alternative and obtain approval of same.

B. Observation Schedule:
1. Notify the Owner's Representative in advance for the following observation meetings, according to the time indicated:
   a. Pre-job conference – 10 days;
   b. Backflow assembly and automatic controller location – 72 hours;
   c. Pressure supply line and control wire installation and testing – 72 hours;
   d. Lateral and supply line installation – 72 hours;
   e. Coverage test – 72 hours;
   f. Final site review – 10 days.

2. When observations are conducted by an entity other than the Owner's Representative, show evidence in writing when and by whom these observations were made.

3. Maintain a set of current and up to date plans on the job site at all times. No site observations will commence without record drawings and current plans. In the event the Contractor calls for a site visit without record drawings, without current plans, without completing previously noted corrections, or without preparing the system for said visit, he shall be responsible for reimbursing the Owner's Representative based on his current billing rates per hour (portal to portal, plus transportation costs) for the inconvenience. No subsequent site visits will be scheduled until this charge has been paid.

C. Piping Inspection:
   1. Arrange for continuous inspection of piping by Owner's Representative and any local jurisdictional entity.

D. Physical Layout:
   1. All piping or equipment shown diagrammatically on drawings outside planting areas shall be installed inside planting area wherever possible, to exact dimensions noted in construction details unless otherwise approved.
   2. Stake out location of each run of pipe and valve locations prior to ditching.
   3. Layout shall be approved by Owner's Representative prior to installation.
   4. Excavate trenches to required depth and width to permit proper handling and installation of pipe and fittings.

3.3 INSTALLATION

A. Trenching:
   1. Excavate trenches to required depths. Follow approved layout for each system. Pipe layout as shown on irrigation plan is schematic. Route piping in the most expedient manner, consistent with the requirements set forth herein, including avoidance of tree roots. Adhere to as-built requirements stated herein.
   2. Trench bottom shall be flat to ensure piping is supported continuously at prepared grade.
   3. Where lines occur under paved areas, consider dimension to be below the subgrade.
   4. Trenching shall pass no closer than 8 feet from base of any existing tree. Do not cut tree roots larger than 2" in diameter without approval of the Owner's Representative.
   5. Maximum trench width is two and a half times the diameter of the pipe.
   6. Provide minimum coverage as follows:
      a. Pressure supply lines (3" or smaller): 24", unless otherwise noted on drawing
      b. Pressure supply lines under paving (2" or smaller): 24", unless otherwise noted on drawing
      c. Pressure supply lines under paving (2½" and larger): 36", unless otherwise noted on drawing
      d. Non-pressure lines: 12", unless otherwise noted on drawing
      e. Non-pressure lines under paving: 18", unless otherwise noted on drawing.
   7. If possible, pipe may be installed with a vibratory plow to minimize surface disturbance.

B. Piping:
   1. Install all plastic pipe and fittings according to manufacturer instructions.
   2. Keep inside of pipe free of dirt and debris; close or cap open ends of pipe when installation is not in progress.
   3. All lines shall have a minimum horizontal separation of 12" from each other and from lines of other trades. Parallel lines shall not be installed directly over one another. Pipe lines crossing each other shall be separated vertically a minimum of 3".
   4. Install concrete thrust blocks in accordance with pipe manufacturer's recommendations for pressure supply piping 3" and larger.
   5. Scale of drawing may not permit indicating all sleeving required. Provide sleeves for all piping under paved areas. Refer to sections that pertain to sleeving material, size, etc.
   6. All major plumbing work using copper pipe shall be performed by a licensed and bonded Plumbing Contractor. Irrigation Contractor shall obtain all permits required.

7. All outlets from main line shall be accomplished with line-sized tees, with an outlet of the specified size. No saddle tees are permitted.
8. Retainer gland bolts shall be tightened as specified in the manufacturer's instructions. All bolts shall be tightened using a torque wrench only. Tighten each wedge nut in an alternate sequence with torque wrench, with a maximum torque of 30 feet/lbs. Verify the torque of the bolts with the Owner's Representative using a torque wrench, to be available on site until job acceptance.

C. Tracer Wires:
1. Carefully place tracer wire on bottom of trench under vertical projection of pipe, avoiding stress from backfilling and running wire continuously throughout the length of pipe.
2. Tracer wire shall follow mainline pipe and laterals; terminating in a yard box with a gate valve that controls these main irrigation lines. Provide sufficient wire to reach surface grade, bending back end of wire to form a loop, and attach a durable plastic label noting "TRACER WIRE."
3. All splices shall be made using Scotchlok or approved equal, encased in epoxy resin to provide a permanent UL-approved watertight connection.
4. Record locations of tracer wires and their termination points on record drawings.

D. Backfilling:
1. Buried pipe in trenches shall be center loaded only until all required tests are performed.
2. Pipe bedding shall surround pipe 1 foot above the top of the pipe.
3. Place bedding in 6" lifts. Densify bedding by water-jetting sufficient to thoroughly wet bedding material around the pipe. Place no rocks over ½" in largest dimension nor organic matter in bedding material.
4. Backfill shall be the material placed above the bedding. Place backfill in 1 foot lifts and densify by water jetting. Continue jetting until backfill collapses and water is forced to surface.
5. Pipe trenches thoroughly densified by water jetting shall have a minimum relative compaction of 85%. Place no rocks over 2" in greatest dimension.
6. Backfill shall be subject to compaction tests as requested by the Owner's Representative. All such compaction tests shall be at the expense of the Contractor. Additional tests may be required until the 85%, minimum compaction is achieved.
7. Finished trenches shall match finish grades, flush with adjacent finish grades. The Contractor shall be responsible for maintaining the trenches flush and smooth until final acceptance of the project. Repair trenches in existing lawn to match finish condition, if applicable.
8. If settlement occurs and subsequent adjustments in pipe, supply lines, planting, etc are necessary, make all such adjustments without cost to the Owner.
9. Hand rake smooth.

E. Trenching and Backfill Under Paving:
1. Where irrigation piping crosses a vehicular roadway or other paving having a width greater than 25 feet, provide a Schedule 40 PVC sleeve a minimum of 2 pipe sizes larger than piping to pass through it. Jack under the paving at a minimum depth of 36".
2. Repair trench in the existing paving with a like paving material, and joint the existing paving both horizontally and vertically.
3. All sleeves shall extend 3 feet minimum beyond edge of roadway.
4. Pressure-test all piping under paving prior to the paving work.
5. Install piping under existing walks by jacking, boring or hydraulic driving. Cut or break sidewalk and/or concrete as necessary and replace paving as a part of the contract cost. Obtain permission from the Owner's Representative to cut or break sidewalks and/or concrete. No hydraulic driving will be permitted under asphaltic concrete paving.
6. Coordinate installation of piping and sleeves under paved areas with General Contractor.

F. Assemblies:
1. Routing of irrigation lines as indicated on the drawings is diagrammatic. Install lines and various assemblies to conform to details on plans.

2. Do not install multiple assemblies in plastic lines; provide each assembly with its own outlet.
3. Perform all directional changes on pressure supply line using 45 degree elbows. No 90 degree elbows will be permitted without approval of Owner's Representative.
4. No more than one size may be used when reducing or increasing a fitting outlet, unless approved by Owner's Representative.
5. Install all assemblies specified herein in accordance with respective detail. In absence of detail drawings or specifications pertaining to specific items required to complete work, perform such work in accordance with best standard practice, with prior approval of the Owner's Representative.
6. Thoroughly clean PVC pipe and fittings of dirt, dust and moisture before installation. Prior to application of PVC solvent cement, prepare all surfaces to be solvent welded with tetrahydrofuran primer, tinted purple.
7. On PVC-to-metal connections, work the metal connections first. Use Teflon tape or approved equal on all threaded PVC-to-PVC connections and on all threaded PVC-to-metal joints, with only light wrench pressure. Where threaded PVC connections are required, use threaded PVC adapters into which the pipe may be welded.
8. Allow joints to set at least 24 hours before pressure is applied to pipe system.
9. Install backflow assemblies in shrub areas at minimum height permitted by local code, unless otherwise approved. Flush pressure supply line before installing backflow prevention unit as required, ensuring piping is free of debris. Paint all backflow devices above ground with 2 coats of forest green enamel. Mask all identification tags prior to painting. After certification, remove all test cocks, replace with threaded brass plugs, and deliver test cocks to Owner's Representative.
10. Verify exact location of all major equipment with the Owner's Representative before installation.
11. Install remote control valves in shrub areas and perpendicular to hardscape unless otherwise approved.

G. Automatic Controller:
1. Install per manufacturer instructions.
2. The foundation of the automatic controller shall be per details.
3. Provide a separate 24-volt control wire from the automatic controller to each remote control valve. Connect remote control valves to controller in numerical sequence shown on the drawings.
4. Mount controller inside cabinet, per drawings.

H. Flushing of System:
1. After all new lines are connected, all necessary diversion work has been completed, and prior to installation of emitters and requisite supply lines, open the control valves and flush out the system using adequate pressure.
2. Flushing shall occur in the presence of Owner's Representative. Start flushing at valve closest to the point of connection and proceed with each consecutive valve, toward valve farthest from the point of connection. Each lateral system shall have each open end capped during the flushing, commencing closest to the valve and proceeding to the farthest. After the entire irrigation system has been flushed, the system shall be pressure tested
3. Install emitters and requisite supply piping only after the system has been flushed to the complete satisfaction of the Owner's Representative.

I. Drip Irrigation Components:
1. Install drip irrigation components per drawings, legend, and details.
2. A single run of PE pipe shall not exceed 100 FT from a RCV or hard PVC pipe connection.
3. PE pipe shall not snake over an area where the elevation between the high and low point of the pipe exceeds 7feet.
4. The maximum flow through 100 FT of PE pipe shall be 200 GPH or 3.33 GPM.
5. Thoroughly flush all lateral lines prior to installing emitters. Flush lines again after emitters are installed to insure all debris has been evacuated from system.

J. Bubblers:

1. Install per manufacturer's recommendations
2. Set heads perpendicular to finish grade
3. Provide two per tree or per plan/detail

K. Valve Boxes:
1. Install all buried valves and equipment in the specified box.
2. Fill area under box with a minimum of 3 cubic feet of ¾" gravel for remote control valves before box is installed.
3. Attach identification tags to each remote control valve, showing number that corresponds with controller sequence. Tags shall be manufactured of polyurethane Behr Desopaid, yellow in color with black letters, 2¾"by 2¼", or as approved by Owner's Representative.
4. Brand sequence number of each valve in minimum 2" high numerals into box top.
5. Install valve boxes square to one another and to edges of adjacent hardscape, unless otherwise approved by Owner's Representative.
6. Set boxes flush with finish grade, including sloped area. Compact all soil within 12" of the perimeter of box by water settlement, as indicated in trench repair section of this specification. Position boxes per construction detail.

L. Electrical Supply:
1. Place low-voltage wiring in the same trench and along side of main lines unless otherwise approved. Do not tape wire to main line. If control wires run same trench as lateral lines or are "dead headed," maintain wire depth at 24".
2. When more than one wire is placed in a trench, tape wires together at a maximum of 12 feet on center.
3. Provide a 12" expansion loop at each connection and directional change for low-voltage wires and 2 feet for stub outs.
4. Use a continuous wire between controller and remote control valves. Except as otherwise approved, do not splice wire at any point. Enclose all approved splices in a UL-approved junction box.
5. Provide each controller with separate ground wire.
6. Provide pull box for low-voltage wires approximately every 200 feet along continuous lineal runs.
7. Where remote control wiring crosses under paving having a width of less than 25 feet, jack a 3" PVC Class 315 sleeve under the paving at a minimum depth of 36". All sleeves shall extend a minimum of 3" beyond edges of paving.
8. When installing low-voltage wire connectors (3M Corporation DBY or DBR), strip control wires of 12" insulation, insert into electrical spring connector, and twist connector in clockwise direction until wires are tight. Insert completed splice into gel-filled tube, and check visually to confirm wire nut has been pushed past the fingers and is seated in the bottom of tube. Position wires in wire channels and close insulator cover.
9. Run 2 extra black control wires from automatic controller to the farthest valve on the system, or to the farthest valve at each end of the controller area, if farthest area extends in two directions from the controller.
10. Provide separate #14 gauge AWG-UF 600-volt white common wire for each 10 consecutive stations on each automatic controller.
11. Provide electrical service for pumps as noted on drawing.

M. Communication Cables:
1. Install cable in a conduit, unless otherwise approved.
2. All splices required shall be as approved by manufacturer and enclosed in a splice box.
3. Stub cable into each controller housing and connect per manufacturer recommendations.
4. Provide a pull box approximately every 200 feet along routing of cable.
5. Provide sufficient wire at remote control valves so that, in case of repair, valve bonnet or splice may be brought to surface without disconnecting wire.
6. Test all cable before grounding as follows:
   a. Test leak resistance from wire to wire, from each wire to shield, and from shield to ground. Record leak resistance, which must be over 20 megohms for all tests

b. Ground shield at master station or at one end of run. Check continuity of wires. Shield resistance should be 6.6 ohms/1,000 feet plus or minus 20%
c. All tests and records shall be performed by a company acceptable to the Owner's Representative
d. Show written evidence to the Owner's Representative at the conclusion of project that this service has been rendered and cable is sound.

N. Protective Pipe Covering:
1. Clean buried pipe and fittings of all foreign substances and film.
2. Coat all surfaces with adhesive primer.
3. Wrap pipe and fittings with 3 layers of polyvinyl chloride tape. Overlap each layer approximately two thirds the width of tape without stretching.
4. Total wrap thickness shall be no less than 10 mils over all surfaces, with no voids.
5. Wrap all piping, fittings, and equipment noted to be frost protected with 3 layers of burlap, secured with one wrap of PVC tape.

O. Flow Sensor and Master Valve:
1. Flow sensor and master valve shall be installed per construction detail on drawing and according to manufacturer recommendation.

P. Moisture Sensing Equipment:
1. Locate in field as directed by the Owner's Representative.
2. Check the system to ensure that sensors are operating correctly, no fewer than 4 times over a 30 day period. Adjust or relocate moisture sensing equipment as necessary.
3. Relocation of equipment as required shall be within 15 feet of original location.
4. Show written data to the Owner's Representative at conclusion of the project that this service has been rendered.

3.4 FIELD QUALITY CONTROL

A. Adjustment of the System:
1. If it is determined that adjustments in the irrigation equipment will provide proper or more adequate coverage, adjust emitters and emitter supply lines so that, per detail, each plant receives adequate flow.
2. Prolonged pooling of water and subsequent erosion shall not occur.
3. When using master flow monitors sensors, determine exact flow rates and proper operating time to avoid water runoff for each control valve. Program this information into the controller, along with minimum flow of each valve and maximum flow for the largest valve. Provide a written copy of this data to Owner's Representative. Fault detection shall be 5% greater than actual flow. Show evidence in writing to the Owner's Representative at the conclusion of the project that this service has been rendered.

B. Protect existing conditions; any existing revegetated areas removed or damaged shall be properly replaced as directed by the Owner's Representative and according to the Final Vegetation Management Plan report.

C. Testing of Irrigation System:
1. Pressure test irrigation main lines following the flushing of the complete system. Test main lines for 24 hours at a median psi with all control valves in place and closed. During the test, provide pressure gauges downstream from the backflow device and upstream from the farthest remote control valve in the system. Air pressure testing of the irrigation system is acceptable if approved by Owner's Representative.
2. Testing of pressure main lines must occur prior to installation of electric control valves, quick couplers or any other equipment that might prevent a proper test from being performed.
3. Test all piping under paved areas under hydrostatic pressure of 150 psi, and prove watertight prior to paving.
4. If leaks develop (more than 5% greater than specified flow rate), replace joints and repeat test until entire system is proven watertight.

5. All hydrostatic tests shall be conducted only in the presence of the Owner's Representative or other duly authorized representative. Do not completely backfill pipe until it has been inspected, tested and approved in writing.
6. Furnish necessary force pump and all other test equipment, if permanent connection is unavailable.
7. When the irrigation system is completed, perform a coverage test in the presence of the Owner's Representative to confirm that water coverage for planting areas is complete and adequate. Furnish all materials and perform all work required to correct any inadequacies of coverage due to deviations from plans, or where the system has been willfully installed as indicated on the drawings when it is obviously inadequate without notifying the Owner's Representative. This test shall be accomplished before any planting occurs.
8. Provide handheld walkie-talkie or personnel as necessary to accomplish this task expeditiously.
9. Upon completion of each phase of work, test and adjust entire system to meet site requirements.
10. Test any low-voltage wiring more than 50 feet long installed under paving for continuity prior to paving.

D. Final Observation Prior to Acceptance:
1. Operate each system in its entirety for the Owner's Representative at time of final observation. Any items deemed unacceptable by the Owner's Representative due to noncompliance with the specifications and drawings shall be corrected to the complete satisfaction of the Owner's Representative.
2. Operate automatic controller rain sensor moisture sensors at conclusion of maintenance period to confirm proper operation.
3. Owner's Representative must confirm receipt of all required equipment, charts, record drawings, etc. before final observation can occur.

E. Termination of Maintenance Period:
1. At end of maintenance period, submit written confirmation to Owner's Representative that the system is operating properly, as per final acceptance, and note any changes/adjustments made during maintenance period. Based on this, Owner's Representative may request additional site review.

3.5 CLEANUP

A. Perform cleanup as each portion of the work progresses. Remove refuse and excess dirt from the site, and sweep or wash down all walks and paving. Repair any damage to the work of others and return to original condition.

3.6 OPERATING INSTRUCTIONS

A. Train Owner's maintenance personnel in proper operation of all major equipment. Provide written confirmation of the person(s) so trained to the Owner's Representative.

B. During maintenance period, establish infiltration rate of soil in all areas (particularly slopes). Schedule automatic controller to not exceed saturation point, and program repeat cycles as required to meet landscape needs while avoiding runoff. At conclusion of maintenance period, provide a typed record of the watering schedules for each valve during maintenance, including various schedules due to seasonal changes.

C. Provide all documents to Owner's Representative at close-out, as specified herein.

PART 4 - MEASUREMENT AND PAYMENT

A. Refer to Section 01 22 00, Part 4, regarding measure and payment.

B. Work of this Section is considered incidental to work under other payment items and no separate measurement and payment will be made to the Contractor for Work of this Section. Work of this section shall include furnishing all labor, materials, tools, equipment, supplies, supervision, and incidentals necessary as described by the Contract Documents.

END OF SECTION

This page intentionally left blank.

SECTION 32 93 00
PLANTS AND PLANTING

PART 1 - GENERAL

1.1 DESCRIPTION

A. In event of conflict between quantities of plants indicated on drawings and in plant list, plant list will govern.

1.2 QUALITY ASSURANCE

A. Nursery Stock Standard: "American Standard for Nursery Stock," ANSI-Z60.1

B. Work performed by qualified nurseryman or landscape contractor

C. Qualifications of Pruners: Experienced Plantsmen

1.3 SUBMITTALS

A. Product Data:
   1. Manufacturer's specifications for all materials
   2. Samples:
      a. Inert Mulch:
         1) Small samples(s) for color selection
         2) 2 lbs of each type and color selected for final approval
      b. Organic Mulch:
         1) ½ lbs of each type
   3. Project Information:
      a. Notify Architect of plant material delivery schedule in advance so that plant material may be inspected on-site prior to installation.
      b. Soil test results
         1) Contractor to take representative samples of soil available on site prior to installation of plant material.
         2) Contractor to recommend soil amendments for planting soil.
         3) Provide testing at no additional cost to Owner.

B. Contract Closeout Information:
   1. Warranty
   2. Maintenance data

1.4 PRODUCT DELIVERY, STORAGE, AND HANDLING

A. Handle plants at all times so that roots or balls are adequately protected from breakage of balls, from sun and drying winds.

B. Plants with dried out tops or roots will be rejected.

1.5 JOB CONDITIONS

A. Protect existing improvements and trees.
   1. Repair or replace damaged items.

B. Protect completed work.

C. Verify location and existence of underground utilities.
   1. Protect existing utilities from damage due to construction activity.

2. Repair damage to utility items.
3. Coordinate work with installation of irrigation system.

D. If plant locations conflict with existing improvements or rock, Owner's Representative will select other locations.
1. Make changes at no extra cost.
2. Do not change location of plants without permission of Owner's Representative.
3. Where tree locations fall under existing overhead wires, or crowd existing trees, adjust locations as directed by Owner's Representative.

E. Planting Times:

1. Groundcovers: Between March 15 and May 1.
2. Do not plant when ground is frozen or temperature is below 32° F.

1.6 WARRANTY

A. Remove and replace new plants supplied, which are impaired, dead or dying during 1 year from initial acceptance.

B. Replacement materials and methods identical to original.

C. Plants replaced under warranty will not have a second warranty, except as stated in paragraph D below.

D. If fall planted material is dead or dying in the spring, replace material during that spring season. If said plants fail again during growing season, replace again in the fall. Every plant must leaf out and be in a healthy condition at beginning of growing season.

PART 2 - PRODUCTS

2.1 MATERIALS

A. Plant Materials:
1. Species and size indicated
   a. No substitutions without written approval of Owner's Representative.
2. Sound, healthy, vigorous, with normal top and root systems
3. Free from diseases, insect pests or their eggs
4. Nursery grown stock, freshly dug
5. No heeled-in, cold storage or collected stock
6. Grown in same or colder climatic zone as project

B. Balled and Burlapped plants (B&B): Firm, natural balls of soil wrapped with burlap or strong cloth and tied.

C. Container Grown Plants (CG):
1. Roots well established in soil, but not root bound
2. Grown in container for at least one growing season

D. Bare Root Plants (BR): Intact root system cleaned of earth, wrapped immediately in wet straw, moss or other suitable material.

E. Planting Soil:
1. Use soil excavated from planting pit
2. Modify soil, if needed, with sand and/or peat moss

F. Organic Mulch: Shredded pine bark or hardwood chips of approved commercial grade.

G. Inert Mulch:
   1. Rock: ¼" minus aggregate Decomposed Granite. See Section 32 15 00 – Aggregate Paving.
   2. Color: Desert or California Gold, unless otherwise noted on drawings.

H. Sand: Clean and free of toxic materials, ASTM-C33.

I. Herbicide: Pre-emergent/Post-emergent: Commercial grade conforming to State and Federal regulations.

J. Weed barrier: Non-woven, geotextile fabric.

K. Edging:
   1. Heavy Duty Straight Profile Edging: Permaloc ProSlide, 13/16" x 5.5", extruded aluminum, in corrugated straight profile, as manufactured by Permaloc Corporation or approved equal.
   2. Section shall have loops on side of section to receive stakes spaced approximately 3 feet apart along its length.
   3. Thickness: 1/8" gage section at 0.055" minimum thick with 0.26"exposed top lip and 3/16" gage section at 0.099" minimum thick with 0.298" exposed top lip.
   4. Length: 16-foot sections
   5. Connection Method: Section ends shall slide together with a telescoping stakeless design.
   6. Stake: 12" long extruded aluminum stake, 0.125". Stakes to interlock into section loops.
   7. Finish: Natural Mill Aluminum

L. Water for Planting Purposes:
   1. Supplied by Owner
   2. Provide equipment necessary to transport water from source to required locations.

M. Antidesiccant: Emulsion that will provide a film over plant surfaces permeable enough to permit transpiration.

2.2 PLANT LIST

A. See drawings for plant list.

PART 3 - EXECUTION

3.1 PREPARATION

A. Immediately heel-in or plant bare root material.

3.2 PLANTING PROCEDURE

A. Layout: Stake all plant material locations and layout bedlines prior to beginning installation. Owner's Representative may approve layout or make adjustments to plant material locations to meet field conditions.

B. Excavate materials without additional cost.

C. Loosen bottom of pits prior to planting.

D. Shrub Pits:
   1. Circular, with vertical sides.
   2. At least 12" greater in diameter than ball diameter.
   3. Sufficient depth to provide 6" of planting soil under ball when set to natural grade.

E. Massed Planting and Groundcover Beds:
   1. Remove sod if required.
   2. Shrubs: Plant in individual holes of required size.
   3. Groundcover Beds: Rototill existing topsoil to depth of 6".
   4. Modify soil with sand and/or peat moss if needed, to insure proper plant growth.

F. Set plants straight or plumb, at such level that after settlement they bear same relationship to finished grade as they did in their former setting.
   1. Remove burlap, rope, wires, etc., from top of balls.
   2. Do not remove burlap from sides and bottom of balls.
   3. Fertilize shrubs and groundcovers with commercial grade granular fertilizer, in accordance with manufacturer's recommended procedures.

G. Backfill plant pits with planting soil.
   1. Tamp under and around balls to eliminate voids.
   2. Tamp to one-half depth of pit and thoroughly water and puddle before backfilling to proper grade.
   3. After planting has been completed, flood pit again so that backfill is thoroughly saturated and settled.

H. After planting is complete, form saucer 3" high around each plant extending to limit of plant pit using existing soil.

I. Mulching:

   1. In massed plantings, mulch entire area uniformly to depth of 3" with organic mulch.
   2. Mulch uniformly over groundcover beds to depth of 3" with organic mulch.
   3. If mulching is delayed and soil has dried out, water plants thoroughly before spreading mulch.

J. Metal edging: Install edging in accordance with manufacturer's recommendations and as indicated on drawings.
   1. Keep top of edging flush with walks and curbs.

3.3 INERT MULCH AREAS

A. In areas to receive inert mulch, apply herbicide in accord with manufacturer's recommendations.

B. Cover areas with weed barrier.

C. Overlap edges minimum 6".

D. Install 2" uniform layer of inert mulch.
   1. Recess area so that top of rock is flush with walks or curbs.

E. If plants are installed during same time that inert mulch is installed, delay herbicide application 3 to 4 weeks.

F. Apply herbicide later over surfaces.

3.4 CLEAN-UP

A. Remove debris and waste materials, and excess earth materials.

B. Resod any damaged turf areas.

3.5 REVIEW FOR INITIAL ACCEPTANCE

A. At end of each planting season, Owner's Representative will review and record acceptability of plant material.

B. Payment for completed work will be based only on acceptable plant materials and workmanship.

3.6 MAINTENANCE

A. Maintain new and transplanted materials for one year from initial acceptance:
   1. Water when necessary.
   2. Remove dead or dying branches, and sprouts.
   3. Maintain mulch depth.
   4. Weed plant beds and pits.

PART 4 - MEASUREMENT AND PAYMENT

A. Refer to Section 01 22 00, Part 4, regarding measure and payment.

B. Work of this Section is considered incidental to work under other payment items and no separate measurement and payment will be made to the Contractor for Work of this Section. Work of this section shall include furnishing all labor, materials, tools, equipment, supplies, supervision, and incidentals necessary as described by the Contract Documents.

END OF SECTION

This page intentionally left blank.

SECTION 34 11 27
SUB-BALLAST AND AGGREGATE BASE

PART 1 - GENERAL

1.1 SUMMARY

A. This Section specifies the material requirements for roadway and pathway aggregate base to be furnished and placed to the lines, grades, and dimensions in accordance with the Plans, Specifications, and directions of the Engineer.

B. Related Specification Sections include but are not necessarily limited to:
   1. Bidding Requirements, Contract Forms, and Conditions of the Contract.
   2. Division 01 - General Requirements.

1.2 REFERENCES

A. Caltrans Specifications: Section 26 – Aggregate Bases.

1.3 SUBMITTALS

A. Submit the following in accordance with Division 01:
   1. Compliance: Supplier's certification that material delivered to the site is in compliance with the Specifications.
   2. Samples: As required by the Engineer samples of not less than 150 LBS. Samples shall be furnished by the Contractor or may be obtained independently by the Engineer's representative for testing to determine whether the material delivered to the site is in compliance with the Specifications.
   3. Equipment: A list of all equipment used for placing and compacting sub-ballast.

1.4 QUALITY ASSURANCE

A. Quality Control:
   1. Provide and install materials in compliance with applicable sections of reference standards.
   2. Establish and maintain required grade lines and elevations.

PART 2 - PRODUCTS

2.1 MATERIAL REQUIREMENTS

A. Aggregate Base shall conform to the gradation and quality requirements for Caltrans Specifications Section 26-1.02A, Class 2 Crushed Aggregate Base, 3/4 IN Maximum. In addition, the aggregate shall consist entirely of crushed rock with a minimum of 75 percent of the material having at least two fractured faces. No reclaimed asphalt or concrete shall be included in this material.

PART 3 - EXECUTION

3.1 SUB-BALLAST AND AGGREGATE BASE

A. Sub-ballast and aggregate base shall not be spread until the Engineer has approved the subgrade.

B. Spread and compact sub-ballast and aggregate base in conformance with the requirements of Caltrans Specifications Section 26-1.03: Subgrade; Section 26-1.035: Adding Water; Section 26-104: Spreading; Section 26-105: Compacting. Compaction shall be to a minimum of 95 percent relative compaction of modified proctor ASTM D1557. Maximum lift shall be 6 IN (compacted).

C. The surface of the sub-ballast and aggregate base shall be stable to permit follow-on stages of construction without rutting.

D. Sub-ballast and aggregate base shall be finished to within 0.05 FT of the lines and grades indicated on the Contract Plans.

E. Sub-ballast and aggregate base shall be maintained during construction free of deformation, rutting, or inclusion of fines and within lines and grades listed above in a condition acceptable to the Engineer until ballast or paving material has been placed and approved at no additional cost to SANBAG.

PART 4 - MEASUREMENT AND PAYMENT

A. Refer to Section 01 22 00, Part 4, regarding measure and payment.

B. Work of this Section is considered incidental to work under other payment items and no separate measurement and payment will be made to the Contractor for Work of this Section. Work of this section shall include furnishing all labor, materials, tools, equipment, supplies, supervision, and incidentals necessary as described by the Contract Documents.

END OF SECTION

ATTACHMENT "D"

SAN BERNARDINO TRANSIT CENTER EMERGENCY GENERATOR & LANDSCAPE MODIFICATIONS PROJECT

PROJECT PLANS

SAN BERNARDINO COUNTY ASSOCIATED GOVERNMENTS (SANBAG)

SAN BERNARDINO TRANSIT CENTER OMNITRANS BUS FACILITY (SBTC)

599 WEST RIALTO AVENUE SAN BERNARDINO, CA 92410

EMERGENCY GENERATOR AND LANDSCAPE MODIFICATIONS BID SET

HDR CONTRACT No. 181207 PERMIT No. B1600167, E1600075 SANBAG CONTRACT No. IFB 16-1001520

Attachment "D"

APN#0136-021-23,24,25; 0136-021-12; 0136-021-28

AUGUST 8, 2016

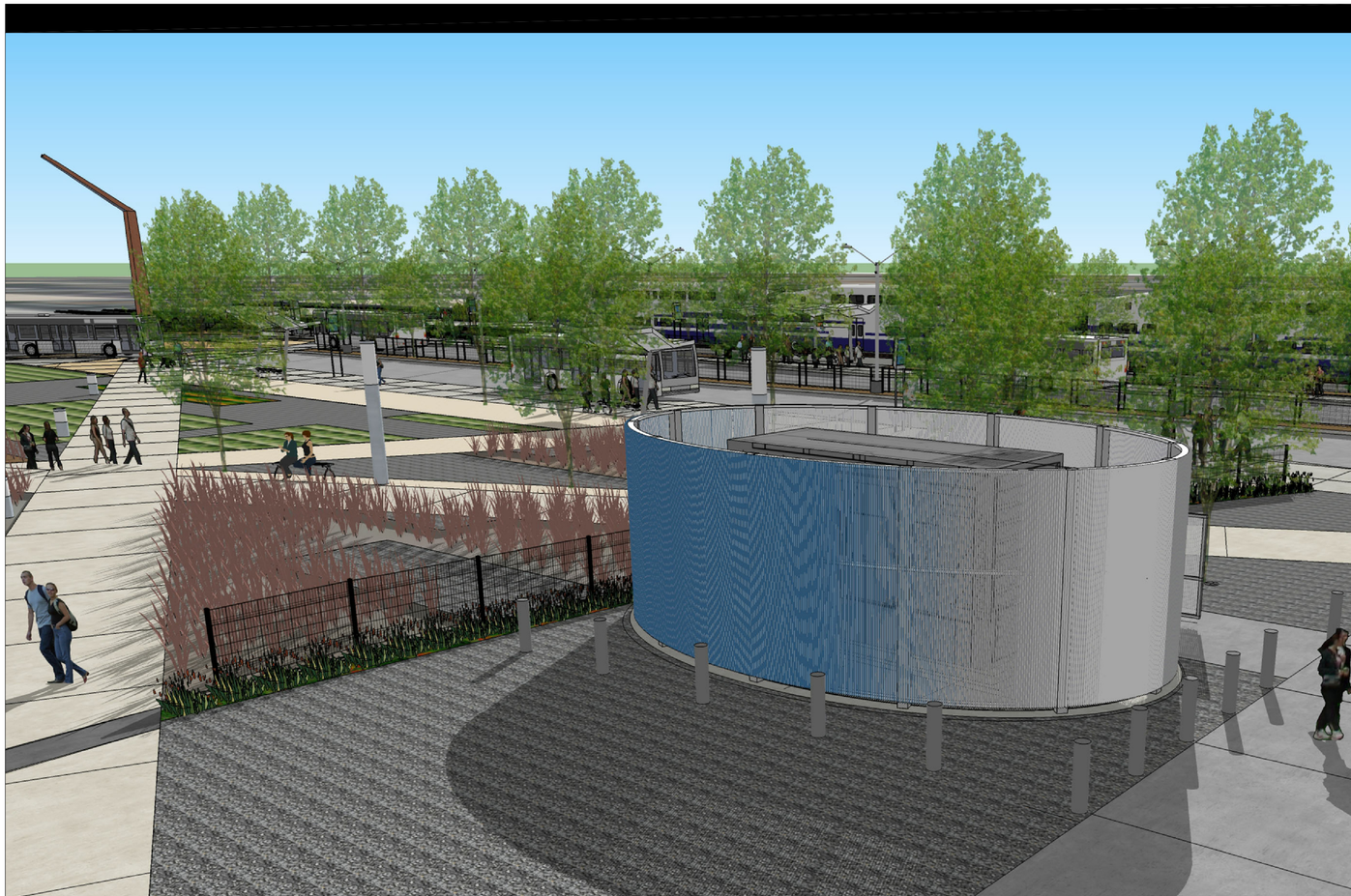

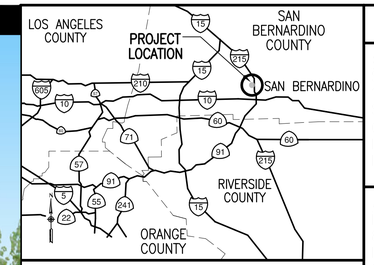

NO SCALE VICINITY MAP

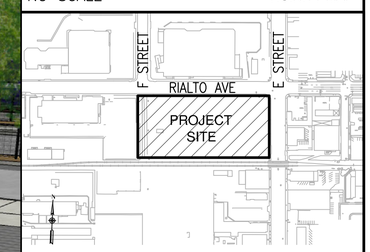

NO SCALE LOCATION MAP

PROJECT DIRECTORY

OWNER
SAN BERNARDINO COUNTY ASSOCIATED GOVERNMENTS
1170 W. 3RD STREET, 2ND FLR
SAN BERNARDINO, CA 92410
CONTACT: CARRIE SCHINDLER/VICTOR LOPEZ
PHONE: 909.889.8276
EMAIL: cschindler@sanbag.ca.gov
vlopez@sanbag.ca.gov

OWNER
OMNITRANS
1700 W. 5TH STREET
SAN BERNARDINO, CA 92411
CONTACT: ANNA RAHTZ
PHONE: 909.379.7256
EMAIL: anna.rahtz@omnitrans.org

ARCHITECTURE
HDR ENGINEERING, INC
801 S. GRAND AVE, SUITE 500
LOS ANGELES, CA 90017
CONTACT: ROBERT JANIK, AIA, LEEP AP
PHONE: 213.239.5800 FAX:213.239.5801
EMAIL: Robert.Janik@hdrinc.com

ELECTRICAL
HDR ARCHITECTURE, INC
3230 EL CAMINO REAL, SUITE 200
IRVINE, CA 92602
CONTACT: RAYMOND GENATO, PE
PHONE: 714.730.2437 FAX: 714.730.2301
EMAIL: Raymond.Genato@hdrinc.com

CIVIL
HDR ENGINEERING, INC
2280 MARKET STREET, SUITE 100
RIVERSIDE, CA 92501
CONTACT: CHARLES CHRISTOPLIS, PE
PHONE: 951.320.7303 FAX:951.320.7301
EMAIL: Charles.Christoplis@hdrinc.com

LANDSCAPE ARCHITECTURE
HDR ENGINEERING, INC
801 S. GRAND AVE, SUITE 500
LOS ANGELES, CA 90017
CONTACT: HEATH HABIG, ASLA
PHONE: 213.239.5800 FAX:213.239.5801
EMAIL: Geath.Habig@hdrinc.com

BUILDING STRUCTURAL
HDR ARCHITECTURE, INC
251 S. LAKE AVE, SUITE 1000
PASADENA, CA 91101
CONTACT: MARK HARPER, SE, PE
PHONE: 626.584.1700 FAX:626.584.1750
EMAIL: Mark.Harper@hdrinc.com

PROJECT DESCRIPTION

PROVIDE AN EXTERIOR 250 KW EMERGENCY GENERATOR SET AND GENERATOR YARD ENCLOSURE FOR THE NEW SAN BERNARDINO TRANSIT CENTER. ALSO PROVIDE LANDSCAPING IMPROVEMENTS FOR THE FUTURE TRANSIT ORIENTED DEVELOPMENT PARCELS TO THE EAST OF THE SITE.

OmniTrans
Connecting Our Community.

Governments SANBAG Working Together

LICENSED ARCHITECT
ROBERT JANIK
No. 15225
Exp. 10/31/17
STATE OF CALIFORNIA

SUBMITTED BY: _____ DATE: 8/08/16
ROBERT JANIK, PROJECT MANAGER

HDR

C:\pwworking\sac\d0798846\GENSET-181207-D-0000-GENSET-LANDSCAPE-BID_SET.dwg, Model, 8/26/2016 1:34:20 PM, EGUERRER

DRAWING INDEX / ISSUE LOG

NO.	DWG NUMBER	DESCRIPTION TITLE	6/18/2015 GENSET 30% SET	9/11/2015 GENSET 90% SET	5/4/2016 LANDSCAPE PERMIT	8/8/2016 BID SET
GENERAL						
1	NA	COVER SHEET, VICINITY AND LOCATION PLANS	●	●	●	●
2	G-100	DRAWING INDEX, SYMBOLS	●	●	●	●
3	G-200	ABBREVIATIONS	●	●	●	●
CIVIL						
4	C-001	CIVIL-GENERAL NOTES, LEGENDS & CONSTRUCTION NOTES	●	●		
5	C-203	DEMOLITION – OVERALL SITE	●	●	●	●
6	C-204	DEMOLITION, LAYOUT & GRADING PLAN – GENERATOR AREA	●	●		●
LANDSCAPE						
7	L-100	OVERALL SITE KEY PLAN	●	●	●	●
8	L-101	HARDSCAPE PLAN	●	●	●	●
9	L-102	HARDSCAPE PLAN		●	●	●
10	L-201	IRRIGATION PLAN		●	●	●
11	L-202	IRRIGATION PLAN		●	●	●
12	L-301	PLANTING PLAN		●	●	●
13	L-302	PLANTING PLAN		●	●	●
14	L-401	LANDSCAPE DETAILS	●	●	●	●
15	L-402	IRRIGATION DETAILS		●	●	●
ARCHITECTURAL						
16	A-101C	GENERATOR YARD FLOOR PLAN, DOOR SCHEDULE	●	●		●
17	A-102C	GENERATOR YARD ROOF PLAN AREA C		●		●
18	A-120	BUILDING CANOPY REFLECTED CEILING PLAN		●		●
–	A-201	NOT USED				
19	A-202	GENERATOR YARD EXTERIOR ELEVATIONS	●	●		●
–	A-203	NOT USED				
20	A-204	GENERATOR FENCE DETAILS	●	●		●
ELECTRICAL						
21	E-001	SYMBOL LIST, ABBREVIATIONS AND GENERAL NOTES	●	●	●	●
22	ES-101	ELECTRICAL SITE PLAN	●	●	●	●
23	EL-101	LIGHTING FLOOR PLAN	●	●		●
24	EP-101C	POWER FLOOR PLAN-AREA "C"	●	●		●
25	EC-001	COMMUNICATION SYMBOL LIST AND GENERAL NOTES		●		●
26	EC-101	SIGNAL AND COMMUNICATION FLOOR PLAN-FOR REFERENCE ONLY		●		●
27	E-503	COMMUNICATION DETAILS		●		●
28	E-600A	LIGHTING FIXTURE SCHEDULE	●	●		●
29	E-601	SINGLE LINE DIAGRAM	●	●		●
30	E-701	PANEL SCHEDULES	●	●		●
31	E-702	PANEL SCHEDULES	●	●	●	●
32	ES-801	ELECTRICAL SITE PLAN PHOTOMETRIC	●	●		●
SIGNAGE WAYFINDING						
33	AG-100	EXTERIOR SIGNAGE DETAILS	●	●	●	●

DRAWING INDEX

NO.	DWG NUMBER	DESCRIPTION TITLE	6/18/2015 GENSET 30% SET	9/11/2015 GENSET 90% SET	5/6/2016 LANDSCAPE PERMIT	8/8/2016 BID SET
SECURITY CAMERA SYSTEM						
34	TY-001	SECURITY CAMERA SYSTEM GENERAL NOTES		●		●
35	TY-002	SECURITY CAMERA SYSTEM MOUNTING DIAGRAMS		●		●
36	TY-101	SECURITY CAMERA SYSTEM SINGLE LINE		●		●
37	TY-201	SECURITY CAMERA SYSTEM LAYOUT		●		●
38	TY-202	SECURITY CAMERA SYSTEM FIELD OF VIEW		●		●

SYMBOLS:

SECTION ON DRAWINGS
- DRAWING NUMBER
- ON SHEET NUMBER
- DIRECTION OF VIEW

ELEVATION ON DRAWINGS
- ELEVATION NUMBER
- ON SHEET NUMBER

INTERIOR ELEVATION ON DWGS
- DRAWING NUMBER
- ON SHEET NUMBER
- DIRECTION OF VIEW

DETAIL ON DRAWINGS
- DRAWING NUMBER
- ON SHEET NUMBER
- LOCATION OF DETAIL

SECTION/DETAIL
- SECTION NUMBER
- SHEET NUMBER
- DRAWING TITLE
- DRAWING SCALE
- SCALE

ROOM NUMBER/STAIR-ESCALATOR NUMBER
ROOM NAME

COLUMN CENTERLINE
STRUCTURAL GRID (IDENTIFICATION)
STRUCTURAL GRID LINE
CENTER LINE
STRUCTURAL CENTER LINE
PROPERTY LINE

FLOOR ELEVATION-PLAN
12'-1 3/4" PROJECT ELEVATION

ELEVATION OR SECTION
- DESCRIPTION
- PROJECT ELEVATION

SPOT ELEVATION-PLAN
PROJECTION ELEVATION CROSSHAIRS (+) INDICATE SPOT

PARTITION TYPE
PARTITION TYPE NUMBER

WINDOW TYPE
WINDOW NUMBER

DOOR TYPE
XXXX DOOR NUMBER

REVISION NUMBER

COLORSET NUMBER

FINISH CODE

TRASH RECEPTACLE

SEE SYMBOL LEGEND PER SHEET

WORKING POINT, DATUM POINT

NORTH ARROW

1'-0" 0 1'-0" 2'-0"
1"=1'-0"
SCALE BAR

BREAK LINE

FIRE EXTINGUISHER CABINET – SURFACE MOUNTED

REV.	DATE		BY	SUB.	APP.
	08.08.16	GENERATOR/LANDSCAPE MODIFICATION BID SET			

DESIGNED BY M.MAH
DRAWN BY E.GUERRERO
CHECKED BY M.WEISMANTEL
APPROVED BY R.JANIK
DATE 8.08.16

OmniTrans
Governments SANBAG Working together
SAN BERNARDINO ASSOCIATED GOVERNMENTS

HDR
801 S. GRAND AVENUE
Suite 500
Los Angeles, Ca 90017-4633

SUBMITTED: _____ PROJECT MANAGER
APPROVED: _____

LICENSED ARCHITECT
ROBERT JANIK
No. 15225
Exp. 10/31/17
STATE OF CALIFORNIA

TRANSIT CENTER

DRAWING INDEX, SYMBOLS

CONTRACT NO. IFB 16-1001520
DRAWING NO. G-100
REVISION
SHEET NO. OF
SCALE NTS

C:\pwworking\sac\d0798\#\GENSET-181207-G-100-GENSET+LANDSCAPE.dwg, Layout1, 8/26/2018 1:36:01 PM, EGUERRER

ABBREVIATIONS:

&	AND
@	AT
°	DEGREE(S)
'	FOOT or FEET or MINUTE(S)
"	INCH or INCHES or SECOND(S)
%	PERCENT
#	POUND or NUMBER
AB	ARTICULATED BOLT
ABND	ABANDONED
AC	ASPHALT CONCRETE
ACIP	ARCHITECTURAL CAST IN PLACE CONCRETE
ACM	ALUMINUM COMPOSITE MATERIAL
ACT	ACCOUSTIC TILE
AD	ADVERTISING PANEL
ADA	AMERICAN DISABILITIES ACT
ADF	ACCESSIBLE DRINKING FOUNTAIN
ADJ	ADJACENT
AED	AUTOMATED EXTERNAL DEFIBRILLATOR
AESS	ARCHITECTURAL EXPOSED STRUCTURAL STEEL
AFF	ABOVE FINISHED FLOOR
AL, ALUM	ALUMINUM
ALT	ALTERNATE
AP	ANGLE POINT
APPR	APPROVED
APPROX	APPROXIMATELY
ARCH	ARCHITECTURAL
AR.D	AREA DRAIN
ASCE	AMERICAN SOCIETY OF CIVIL ENGINEERS
A/S	ACCESSIBLE STALL
ASTM	AMERICAN SOCIETY FOR TESTING & MATERIALS
ASPH	ASPHALT
ATR	ABOVE TOP OF RAIL
ATS	AUTOMATIC TRANSFER SWITCH
AVE	AVENUE
BC	BEGINNING OF CURVE, or BRANCH CONTROLLER
BD	BOARD
BETW	BETWEEN
BKCHK	BACK CHECK
BLDG	BUILDING
BLK	BLOCK
BLKG	BLOCKING
BM	BEAM
BNSF	BURLINGTON NORTHERN SANTA FE RAILWAY
B.O.	BOTTOM OF
B.O.R	BASE OF RAIL
BTM	BOTTOM
BUR	BUILT UP ROOFING
CAB	CRUSHED AGGREGATE BASE
CABT	CABINET
CAI	CUSTOMER ASSISTANCE INTERCOM
CAL or CA	CALIFORNIA
CB	CONDUCTOR BOARD
CBC	CALIFORNIA BUILDING CODE
C.C.R.	CALIFORNIA CODE OF REGULATIONS
CCTV	CLOSED CIRCUIT TV CAMERA
CEM	CEMENT
CEM PLS	CEMENT PLASTER
CFS-ND	CONCRETE FLOOR SEALER NORMAL DUTY (INTERIOR)
CIP	CAST IN PLACE
CI	CAST IRON
CIS	CUSTOMER INFORMATION SCREEN
CISCA	CEILINGS AND INTERIOR SYSTEMS
	CONSTRUCTION ASSOCIATION
CJ	CONTROL JOINT
CL or ℄	CENTERLINE
CLST	CLOSET
CLG or CLNG	CEILING
CLR	CLEAR
CLS	CLOSURE
CMU	CONCRETE MASONRY UNIT
COL	COLUMN
C	CONDUIT
CO	CONDUIT ONLY
CODP	CLEAN OUT DECK PLATE
CONC	CONCRETE
COND	CONDITION
CONSTR	CONSTRUCTION
CONT	CONTINUOUS
COMM	COMMUNICATIONS
CODR	CORRIDOR
CP	CEMENT PAPER
CPT	CARPET(ING)
CPUC or PUC	CALIFORNIA PUBLIC UTILITIES COMMISSION
CS	CURVE TO SPIRAL
CSK	COUNTER SUNK
CT	CERAMIC TILE
CU	CONDENSING UNIT
D	DRAIN
DC	DEGREE OF CURVE
DEMO	DEMOLITION
DEPT	DEPARTMENT
DET	DETAIL
DI	DRAIN INLET
DISP	DISPLAY
DIV	DIVISION
DIA	DIAMETER
DIM	DIMENSION
DIST	DISTRIBUTION
DN	DOWN
DSBPRP	DOWNTOWN SAN BERNARDINO PASSENGER RAIL
	PROJECT
DP	(METAL) DRIP PAN
DWC	DRY ERASE WALL COVERING
DWG	DRAWING
d	PENNY
E	EAST or EASTERLY or EASTING
Ea	SUPERELEVATION, ACTUAL
EA	EACH
EBR	ELECTRIC BASEBOARD RADIATOR
EC	END OF CURVE
EJ	EXPANSION JOINT
ELEV	ELEVATOR
	ELEVATION
ELEC	ELECTRICAL
EDR	ELECTRICAL DISTRIBUTION ROOM
EMBED	EMBEDMENT
EMC	ELECTRO- MECHANICAL CONTROLLER
EMR	ELEVATOR MACHINE ROOM
ENCL	ENCLOSURE
ENGR	ENGINEER(ING)
EPR	ELECTRICAL PANEL ROOM
EQ	EQUAL
EQUIP	EQUIPMENT
ERV	ENERGY RECOVERY VENTILATOR
EWC	ELECTRIC WATER COOLER
Eu	SUPERELEVATION, UNBALANCED
EXP	EXPOSED
EXT	EXTERIOR
EXH	EXHAUST
EXH FN	EXHAUST FAN
EXIST	EXISTING
FACP	FIRE ALARM CONTROL PANEL
FCU	FAN COIL UNIT
FD	FLOOR DRAIN
FEC	FIRE EXTINGUISHER CABINET
FEXT or FE	FIRE EXTINGUISHER
FNSH FLR or F.E.	FINISH FLOOR
FH	FLATHEAD
FIG	FIGURE
FNSH	FINISH
FL	FLOOR
FLOU	FLUORESCENT
F.O.	FACE OF
F.O.F.	FACE OF FINISH
F.O.M.	FACE OF MULLION
F.O.S.	FACE OF STEEL
FP	FIRE PROOF
FR	FIRE RATED
FRP	FIBERGLASS REINFORCED PLASTIC
FS	FULL SIZE
FT	FEET/FOOT
FTG	FOOTING
FVC	FIRE VALVE CABINET
FV	FIELD VERIFY
G	GRADE
GA	GAUGE, GAGE
GALV	GALVANIZED
GB	GRADE BREAK
GC	GENERAL CONTRACTOR
GNP	GENERAL PETROLEUM
GRD	GRADE
GFRC	GLASS FIBER REINFORCED CONCRETE
GL	GLAZING/GLASS
GL BLK	GLASS BLOCK
GPM	GALLONS PER MINUTE
GRF or GR FILM	GRAFFITI RESISTANT FILM
GRN	GRANITE
GWB or GYP or GB	GYPSUM WALL BOARD
HAZ	HAZARDOUS
HGT	HEIGHT
HIST	HISTORICAL
HB	HOSE BIBB
HDWR	HARDWARE
HEET	HIGH ENTRANCE/EXIT TURNSTILE
HM	HOLLOW METAL
HNDRL	HANDRAIL
HORIZ	HORIZONTAL
HRU	HEAT RECOVERY UNIT
HR	HOUR
HP, HPT	HIGH POINT
HSS	HOLLOW STRUCTURAL SECTION
HVAC	HEAT, VENTILATION & AIR CONDITIONING
HW	HOT WATER
HWH	HOT WATER HEATER
HXT	HIGH EXIT TURNSTILE
ID	INSIDE DIAMETER
I.F.	INSIDE FACE
ILUM AD	ILLUMINATED ADVERTISING PANEL
IN	INCH(S)
INCL	INCLUDING
IND	INDEPENDENT SYSTEM
INSUL	INSULATION
INT	INTERIOR
INTMD	INTERMEDIATE
INV	INVERT
IP	IRON PIPE
IR	IRON ROD
IRWB	IMPACT RESISTANT WALLBOARD
JT	JOINT
J.CLO	JANITOR'S CLOSET
L	LENGTH
LAV	LAVATORY
LBS	POUNDS
LDR	LEADER
LD	LIP OF GUTTER
LH	LEFT HAND
LLV	LONG LEG VERTICAL
LOW-E	LOW EMISSIVITY GLASS
LPT	LOW POINT
Ls	LENGTH OF SPIRAL
LT	LEFT
LUB	LUBRICATORS,(-TION)
MACH	MACHINE
MATL	MATERIAL
MAX	MAXIMUM
MAINT	MAINTENANCE
MAS	MASONRY
MBL	MOBIL OIL
MCI	MCI-WORLCOM FIBER OPTIC
MCP	METAL CEILING PANEL
MDF	MEDIUM DENSITY FIBERBOARD
MEP	MECHANICAL, ELECTRICAL, PLUMBING
MECH	MECHANICAL
MEMB	MEMBRANE
MEZZ	MEZZANINE
MFD	MANUFACTURED
MFR	MANUFACTURER
MFS	METROPOLITAN FIBER OPTIC SYSTEM
MGR	MANAGER
MH	MANHOLE
MIN	MINIMUM
MIRR	MIRROR
MISC	MISCELLANEOUS
ML	METAL LATH
MO	MASONRY OPENING
MTD	MOUNTED
MTG	MOUNTING
MTL	METAL
MP	MILEPOST
MT	MAIN TRACK
MTVM	MULTI TRIP VALIDATOR MACHINE
MWD	METROPOLITAN WATER DISTRICT
	OF SOUTHERN CALIFORNIA
N	NORTH or NORTHERLY or NORTHING
NA	NOT APPLICABLE
NA	NORTHBOUND
NFPA	NATIONAL FIRE PROTECTION ASSOCIATION
NIC	NOT IN CONTRACT
NO.	NUMBER
NOM	NOMINAL
NPT	NATIONAL PIPE THREAD
NR	NON-RATED
NTS	NOT TO SCALE
OC	ON CENTER
OD	OUTSIDE DIAMETER
OFF	OFFICE
OFCI	OWNER FURNISHED, CONTRACTOR INSTALLED
OFOI	OWNER FURNISHED, OWNER INSTALLED
OFVI	OWNER FURNISHED, VENDOR INSTALLED
OH	OVERHEAD
OPNG	OPENING
OPP	OPPOSITE
OPER	OPERABLE
PA/CMS	PUBLIC ADDRESS/CHANGEABLE MESSAGE SIGN
PAC BELL	PACIFIC BELL
PART	PARTITION
P/E	PARTITION
PB	PULLBOX
PC	POINT OF CURVE
PCC	POINT OF COMPOUND CURVATURE
PDF	POWER DRIVEN FASTENERS
PED	PEDESTRIAN
PI	POINT OF INTERSECTION
PIP	PASSENGER INFORMATION PHONE
PITO	POINT OF INTERSECTION OF TURNOUT
POB	POINT OF BEGINNING
POE	POINT OF ENDING
POT	POINT ON TANGENT
PP	POWER POLE
PPUDO	PASSENGER PICK-UP DROP OFF
PR	PAIR
PLA	PLATE
PLAM	PLASTIC LAMINATE
PLAT	PLATFORM
PLSR	PLASTER
PLYWD	PLYWOOD
PLMB	PLUMBING
PMS	PANTONE MATCHING SYSTEM
PNL	PANEL
PNT or PTD	PAINTED
POC	POINT ON CURVE
PREC	POINT OF REVERSE CURVATURE
PPSI	PACIFIC PIPELINE SYSTEM INC.
PRC	PRECAST
PRT	PORCELAIN TILE
PRESS.TD	PRESSURE TREATED
PREFAB	PREFABRICATED
PROP	PROPOSED
PROP LN	PROPERTY LINE
PSF	POINT OF SWITCH
PSF or PS	POUNDS PER SQUARE FOOT
PSI	POUNDS PER SQUARE INCH
PT	POINT
PTD	PAPER TOWEL DISPENSER
PTN	PARTITION
PTZ	POINT-TILT-ZOOM CAMERA
PVC	POINT OF VERTICAL CURVE
PVI	POINT OF VERTICAL INTERSECTION
PVR	PAVER
PVT	POINT OF VERTICAL TANGENT
QTY	QUANTITY
QT	QUARRY TILE
QWEST	QWEST FIBER OPTIC
R	RISER
RAD	RADIUS
RAL	RAL COLOR CHART
RB	RUBBER BASE
RC	REFLECTED CEILING
RCP	REFLECTED CEILING PLAN
RF.D	ROOF DRAIN
REF	REFERENCE
REINF	REINFORCING
RELOC	RELOCATION
REQD	REQUIRED
RET	RETAINING
REV	REVISION
RH	RIGHT HAND
RGB	RED GREEN BLUE COLOR SYSTEM
RM	ROOM
RO	ROUGH OPENING
RR	RAILROAD
R/W	RIGHT-OF-WAY
S	SOUTH or SOUTHERLY or SLOPE
SA	SELF-ADHESIVE or SELF-ADHERING
SASM	SELF-ADHESIVE SHEET MEMBRANE
SB	SOUTHBOUND
SBX	SAN BERNARDINO EXPRESS
SC	SPIRAL TO CURVE
SCDISP	SEAT COVER DISPENSER
SD	STORM DRAIN
SDISP	SOAP DISPENSER
SCE	SOUTHERN CALIFORNIA EDISON
SCG	SOUTHERN CALIFORNIA GAS
SCRRA	SOUTHERN CALIFORNIA REGIONAL RAIL AUTHORITY
	(METROLINK)
SCHED	SCHEDULE
SECT	SECTION
SF, SQFT	SQUARE FEET OR SUPPLY FAN
SGFT	STRUCTURAL GLAZED FACING TILE
SH	SHEET
SIM	SIMILAR
SL	SLAB
SMS	SHEET METAL SCREW
SND	SANITARY NAPKIN DISPENSER
SO	SOUTHERN
SOFF	SOFFIT
SOG	SLAB ON GRADE
SP	START POINT
SPEC	SPECIFICATION
SPPL, SFPP	SANTA FE PACIFIC PIPLEINES L.P. (NOW KINDER MORGAN)
	(FORMERLY KNOWN AS SOUTHERN PACIFIC PIPELINES INC.)
SPPT	SUPPORT
SPPWC	STANDARD PLANS FOR PUBLIC WORKS CONSTRUCTION
SQ	SQUARE
SS	SANITARY SEWER
SSG	STRUCTURAL SILICONE GLAZING
SSMH	SANITARY SEWER MANHOLE
ST	STREET
STA	STATION
STL	STEEL
ST STL	STAINLESS STEEL
STD	STANDARD
STOR	STORAGE
STR	STAIR
STRL, STRUCT	STRUCTURAL
SUSP	SUSPENDED
SUPV	SUPERVISOR
SW	SHERMAN WILLIAMS
SYS	SYSTEM
T/C	TRACK CENTER(S)
THK	THICK
TA	TRANSIT AUTHORITY
TBD	TO BE DECIDED, DETERMINED
TC	TOP OF CURB
TD	TOTAL DISTANCE
TEL	TELEPHONE
TEMP	TEMPORARY
T.O.	TOP OF
T.O.D.	TRANSIT ORIENTED DEVELOPMENT
T.O.F.F.	TOP OF FINISH FLOOR
T.O.F.S.	TOP OF FINISH SURFACE
T.O.R. or T/R	TOP OF RAIL
T.O.S.	TOP OF STEEL
TPD	TOILET PAPER DISPENSER
TPO	THERMOPLASTIC POLYOLEFIN MEMBRANE ROOF
T/R	TRASH RECEPTACLE
TRK	TRACK
TTY	TEXT TYPE TELEPHONE
TVM	TICKET VENDING MACHINE
TV	TELEVISION
TYP	TYPICAL
T & B	TOP & BOTTOM
UL	UNDERWRITERS LABORATORY
UD	UNDERDRAIN
UON, UNO	UNLESS OTHERWISE NOTED
UP	UNDERPASS
UPRR	UNION PACIFIC RAILROAD
VB	VINYL BASE
VCP	VITRIFIED CLAY PIPE
VCT	VINYL COMPOSITION TILE
VERT	VERTICAL
VEST	VESTIBULE
VFCI	VENDOR FURNISHED, CONTRACTOR INSTALLED
VFVI	VENDOR FURNISHED, VENDOR INSTALLED
VIF	VERIFY IN FIELD
VIN	VINYL
VMS	VARIABLE MESSAGE SIGN
VOL	VOLUME
VRF	VARIABLE REFRIGERANT FLOW
W	WEST or WESTERLY
W/	WITH
WC	WATER CLOSET
WD	WOOD
WI	WROUGHT IRON
W/O	WITHOUT
WO	WHERE OCCURS
WP	WORKING POINT OR WATER PROOFING
WT	WEIGHT
WM	WATER METER
WWM	WELDED WIRE MESH
XING	CROSSING
XO or XOVER	CROSSOVER
YPC	YELLOW PLASTIC CAP

REV.	DATE		BY/SUB.	APP.
	08.08.16	GENERATOR/LANDSCAPE MODIFICATION BID SET		

DESIGNED BY M.MAH
DRAWN BY E.GUERRERO
CHECKED BY M.WEISMANTEL
APPROVED BY R.JANIK
DATE 8.08.16

OmniTrans Connecting Our Community.
Governments SANBAG Working Together SAN BERNARDINO ASSOCIATED GOVERNMENTS

HDR 801 S. GRAND AVENUE
Suite 500
Los Angeles, Ca 90017-4633

SUBMITTED: PROJECT MANAGER
APPROVED:

LICENSED ARCHITECT ROBERT JANIK No. 15225 Exp. 10/31/17 STATE OF CALIFORNIA

TRANSIT CENTER
ABBREVIATIONS

CONTRACT NO. IFB 16-1001520
DRAWING NO. G-200
REVISION
SHEET NO. OF
SCALE NTS

C:\pwworking\sac\d0749984\GENSET-181207-G-0200.dwg, Layout1, 8/26/2016 1:37:02 PM, EGUERRER

GENERAL NOTES TO CONTRACTOR

1. ALL WORK SHALL BE IN ACCORDANCE WITH THE STANDARD SPECIFICATIONS FOR PUBLIC WORKS CONSTRUCTION (GREEN BOOK) LATEST EDITION WITH ALL SUPPLEMENTS AND CITY OF SAN BERNARDINO STANDARD DRAWINGS.
2. APPROVAL OF THIS PLAN BY THE CITY OF SAN BERNARDINO DOES NOT CONSTITUTE A REPRESENTATION AS TO THE ACCURACY OF THE LOCATION OR OF THE EXISTENCE OR NON-EXISTENCE OF ANY UNDERGROUND UTILITY PIPE OR STRUCTURE WITHIN THE LIMITS OF THIS PROJECT. THE CONTRACTOR SHALL ASSUME FULL RESPONSIBILITY FOR THE PROTECTION OF ALL UTILITIES WITHIN THE LIMITS OF THE PROJECT. CONTRACTOR SHALL CONTACT UNDERGROUND SERVICE ALERT 48 HOURS PRIOR TO START OF WORK.
3. INSPECTION SHALL BE BY THE CITY OF SAN BERNARDINO DEPARTMENT OF PUBLIC WORKS FOR ALL OFFSITE ITEMS. ALL REQUESTS FOR INSPECTION SHALL BE MADE AT LEAST 24 HOURS IN ADVANCE OF THE PROPOSED CONSTRUCTION.
4. ALL JOIN LINES SHALL BE SAW CUT ON A NEAT, STRAIGHT LINE PARALLEL WITH THE JOIN. THE CUT EDGE SHALL BE PROTECTED FROM CRUSHING, AND ALL BROKEN EDGES SHALL BE RECUT PRIOR TO PAVING.
5. DURING THE PERIOD OF CONSTRUCTION, THE CONTRACTOR SHALL FURNISH, ERECT AND MAINTAIN SUCH WARNINGS, SIGNS, STOP SIGNS, BARRICADES AND OTHER SAFETY MEASURES IN CONFORMANCE WITH THE W.A.T.C.H. MANUAL.
6. CONTRACTOR SHALL REINSTALL PAVEMENT MARKINGS, STRIPING AND SIGNING THAT HAS BEEN DISTURBED BY HIS OPERATION.
7. THE CONTRACTOR SHALL PROVIDE SAFE AND CONTINUOUS PASSAGE FOR LOCAL PEDESTRIAN AND VEHICULAR TRAFFIC AT ALL TIMES.
8. THE CONTRACTOR SHALL BE RESPONSIBLE TO APPLY FOR THE SOUTH COAST AIR QUALITY MANAGEMENT DISTRICT (SCAQMD) PERMIT REGARDING THE EMERGENCY GENERATOR AND ALL ITS APPURTENANCES. IT SHALL COMPLY WITH ALL SCAQMD REGULATIONS.
9. NOT USED.
10. NOT USED.
11. THE CONTRACTOR SHALL EXERCISE DUE CARE TO AVOID INJURY TO EXISTING IMPROVEMENTS OR FACILITIES, UTILITY FACILITIES, ADJACENT PROPERTY , AND TREES AND SHRUBBERY THAT ARE NOT TO BE REMOVED.
12. IN ACCORDANCE WITH GENERALLY ACCEPTED CONSTRUCTION PRACTICES, THE CONTRACTOR SHALL BE SOLELY AND COMPLETELY RESPONSIBLE FOR CONDITIONS OF THE JOB SITE, INCLUDING SAFETY OF ALL PERSONS AND PROPERTY DURING PERFORMANCE OF THE WORK, AND THE CONTRACTOR SHALL FULLY COMPLY WITH ALL STATE AND FEDERAL LAWS, RULES, REGULATIONS, AND ORDERS RELATING TO SAFETY TO THE PUBLIC AND WORKMEN.
13. DUST SHALL BE CONTROLLED AT ALL TIMES BY APPROVED METHODS.
14. PUBLIC STREETS SHALL BE KEPT CLEAN AND FREE FROM DIRT AND/OR DEBRIS. THE CONTRACTOR SHALL BE RESPONSIBLE FOR ALL COSTS INCURRED IN STREET CLEANING NECESSITATED BY HIS OPERATION.
15. FULL STREET CLOSURE WILL NOT BE PERMITTED UNLESS PRIOR WRITTEN APPROVAL IS OBTAINED FROM THE DIRECTOR OF PUBLIC WORKS/CITY ENGINEER. 48 HOUR NOTICE WILL BE REQUIRED TO THE CITY AND AFFECTED PROPERTY OWNERS PRIOR TO ANY CLOSURE.
16. NOT USED.
17. CAL-OSHA PERMITS SHALL BE REQUIRED FOR ANY TRENCH WORK OVER 5' IN DEPTH. EVIDENCE MUST BE PRESENTED TO THE CITY PRIOR TO PERMIT ISSUANCE.
18. ALL TRENCH BACKFILL SHALL BE TESTED AND CERTIFIED BY A SOILS ENGINEER PRIOR TO ACCEPTANCE.
19. NOT USED.
20. NOT USED.
21. CONTRACTORS WILL BE REQUIRED TO OBTAIN CITY BUSINESS LICENSES, INSURANCE AND PROVIDE EVIDENCE OF SAME TO INSPECTION STAFF UPON REQUEST.
22. THE FINAL COMPACT ON REPORT AND APPROVAL FROM THE SOILS ENGINEER SHALL CONTAIN THE TYPE OF FIELD TESTING PERFORMED. EACH TEST SHALL BE IDENTIFIED WITH THE METHOD OF OBTAINING THE IN PLACE DENSITY, WHETHER SAND-CONE, DRIVE-RING, OR OTHER APPROVED METHOD AND SHALL BE SO NOTED FOR EACH TEST. SUFFICIENT MAXIMUM DENSITY DETERMINATIONS SHALL BE PERFORMED TO VERIFY THE ACCURACY OF THE MAXIMUM DENSITY CURVES USED BY THE FIELD TECHNICIAN. RECOMMENDATIONS FOR STRUCTURAL SECTIONS SHALL ALSO BE SUPPLIED.
23. THE CONTRACTOR SHALL NOT PLACE CONCRETE OR ASPHALT ON THE PROJECT WITHOUT FIRST HAVING SUBMITTED COMPACTION TESTS TO THE CITY BUILDING AND SAFETY DEPARTMENT HAVING JURISDICTION.
24. ALL PLAN REVISIONS SHALL BE SUBMITTED TO THE DESIGN SECTION FOR REVIEW AND APPROVAL PRIOR TO MAKING FIELD REVISIONS. CONSTRUCTION, OTHER THAN SHOWN ON THE APPROVED PLANS WILL NOT BE PERMITTED WITHOUT APPROVAL OF REVISIONS.
25. CERTIFICATES OF OCCUPANCY OR UTILITY CLEARANCE WILL NOT BE ISSUED UNTIL ALL WORK AND SAFETY ITEMS HAVE BEEN COMPLETED SATISFACTORILY.

LEGEND

- W — EXISTING WATER LINE
- G — EXISTING GAS LINE
- SS — EXISTING SEWER LINE
- SD — EXISTING STORM DRAIN LINE
- E — EXISTING ELECTRICAL LINE
- EXISTING STREET LIGHT
- EXISTING FIRE HYDRANT
- EXISTING MANHOLE
- EXISTING POWER POLE
- PROPOSED RIGHT OF WAY
- PROPOSED STREET LIGHT

BENCH MARK / BASIS OF BEARING

THE BASIS OF BEARINGS, COORDINATES AND ELEVATIONS AS DETERMINED BY SURVEY FOR THIS PROJECT IS NORTH AMERICAN DATUM OF 1983 WITH COORDINATES EXPRESSED AS NAD-83 (NSRS-2007 ADJUSTMENT) ZONE 5 VALUES. THESE COORDINATE VALUES WERE DETERMINED THROUGH A GPS FAST-STATIC METHOD CONTROL NETWORK AND WAS CONSTRAINED TO CONTINUOUSLY OPERATING REFERENCE STATIONS (CORS) AS SHOWN BELOW.

DISTANCES SHOWN ARE GRID DISTANCES IN U.S. SURVEY FEET. TO OBTAIN GROUND LEVEL DISTANCES, MULTIPLY DISTANCES BY 1/0.99993920.

CALIFORNIA SPATIAL REFERENCE CENTER (CSRC) CORS STATIONS:

P612, N 189127735, E 6768672.64, ORTHO HEIGHT = 1864.79'
BMRY, N 1810355.13, E 6869540.90, ORTHO HEIGHT = 2685.44'

LOCAL PROJECT CONTROL AS DETERMINED FROM THE ABOVE-MENTIONED PRIMARY CONTROL IS AS FOLLOWS:

GPS BASE STATION: 999, N 1859335.03, E 6775084.19, ELEV=1027.02', SET BOAT SPIKE AND WASHER STAMPED "L.S. 7019", 232' WEST OF THE WEST RIGHT OF WAY LINE OF 'E' STREET, 78' SOUTH OF THE SOUTH RIGHT OF WAY LINE OF THE SANBAG RAILWAY.

13564, N 1859793.293, E 6774670.068, ELEV=1036.20', SET SCRIBED 'X' IN CONCRETE WALK, 1' SOUTH OF THE FACE OF CURB AT THE SOUTH RIGHT OF WAY OF RIALTO AVENUE, 2' WEST OF THE SOUTH PROLONGATION OF THE CENTERLINE OF 'F' STREET.

13563, N 1859796.037, E 6775282.853, ELEV=1031.34', SET SCRIBED 'X' IN CONCRETE WALK AT THE S.W. INTERSECTION OF RIALTO AVENUE AND 'E' STREET, 0.8' SOUTH OF THE FACE OF CURB, 2' WEST OF THE WEST CURB RETURN ALONG RIALTO AVENUE.

THE VERTICAL DATUM FOR THE ABOVE-MENTIONED PROJECT CONTROL IS THE NORTH AMERICAN VERTICAL DATUM (N.A.V.D.) OF 1988. THIS SURVEY PERFORMED A PRECISE DIGITAL LEVEL RUN THROUGH THE ABOVE-MENTIONED LOCAL CONTROL FROM THE FOLLOWING FIRST ORDER N.G.S. BENCHMARK: W 471, PID EV1057, ELEVATION = 1069.11'.

ABBREVIATIONS

AWWA	AMERICAN WATER WORKS ASSOCIATION	CY	CUBIC YARD	JS	JUNCTION STRUCTURE	R	RADIUS
AC	ASPHALT CONCRETE	DI	DRAINAGE INLET	JT	JOINT	RT	RIGHT
AVE	AVENUE	EA	EACH	LF	LINEAR FEET	S	SLOPE
BC	BEGIN CURVE	EC	END CURVE	LT	LEFT	SBPWD	SAN BERNARDINO PUBLIC WORKS DEPARTMENT
BCR	BEGIN CURB RETURN	ECR	END CURB RETURN	MAX	MAXIMUM	SF	SQUARE FEET
BVC	BEGIN VERTICAL CURVE	ELEV	ELEVATION	MH	MANHOLE	SPPWC	STANDARD PLANS FOR
BW	BACK OF WALK	EVC	END VERTICAL CURVE	MIN	MINIMUM		PUBLIC WORKS CONSTRUCTION
C&G	CURB AND GUTTER	EX, EXIST	EXISTING	MOD	MODIFY	ST	STREET
CAB	CRUSHED AGGREGATE BASE	EXP	EXPANSION	NO.	NUMBER	STA	STATIONING
CB	CATCH BASIN	FG	FINISH GRADE	NTS	NOT TO SCALE	STD	STANDARD
℄, CL	CENTERLINE	FL	FLOW LINE	OC	ON CENTER	SS	SANITARY SEWER
CF	CURB FACE	FPS	FEET PER SECOND	OSHA	OCCUPATIONAL SAFETY & HEALTH ADMINISTRATION	TC	TOP OF CURB
CFS	CUBIC FEET PER SECOND	FS	FINISH SURFACE	PCC	PORTLAND CEMENT CONCRETE	TEL	TELEPHONE
CLR	CLEAR	FT	FOOT	PL	PROPERTY LINE	TR	TOP OF RAIL
COM	COMMUNICATIONS	GB	GRADE BREAK	PVMT	PAVEMENT	TYP	TYPICAL
CONC	CONCRETE	HGL	100-YEAR STORM EVENT HYDRAULIC GRADE LINE	Q_{100}	100-YEAR STORM EVENT FLOW	V_{100}	100-YEAR STORM EVENT VELOCITY
CONT	CONTINUE	INV	INVERT	RCP	REINFORCED CONCRETE PIPE	VCP	VITRIFIED CLAY PIPE
				R/W	RIGHT OF WAY	W	WATER

REV.	DATE		BY	SUB.	APP.
	08.08.16	GENERATOR/LANDSCAPE MODIFICATION BID SET			

DESIGNED BY C.CHRISTOPLIS
DRAWN BY E.GUERRERO
CHECKED BY M.MAH
APPROVED BY R.JANIK
DATE 08.08.16

OmniTrans — Connecting Our Communities
Governments SANBAG Working Together
SAN BERNARDINO ASSOCIATED GOVERNMENTS

FDR
801 S. GRAND AVENUE
Suite 500
Los Angeles, Ca 90017-4633

SUBMITTED: _____ PROJECT MANAGER
APPROVED: _____

REGISTERED PROFESSIONAL ENGINEER — CHARLES CHRISTOPLIS — No. 043570 — Exp. 12/31/16 — CIVIL — STATE OF CALIFORNIA

TRANSIT CENTER

CIVIL

GENERAL NOTES, LEGENDS & CONSTRUCTION NOTES

CONTRACT NO. IFB 16-1001520
DRAWING NO. C-001
REVISION
SHEET NO. OF
SCALE

C:\pwworking\sac\d0585818\81207-C-001.dwg, C-001 - GENERAL NOTES LEGENDS & CONSTRUCTION NOTES, 8/26/2016 1:39:04 PM, EGUERRER

GENERAL NOTES

1. SEE A-101C FOR BOLLARD AND EQUIPMENT PAD DIMENSIONS AT GENERATOR AREA
2. ALL ITEMS IN SCREENED COLOR ARE EXISTING, PROTECT IN PLACE.

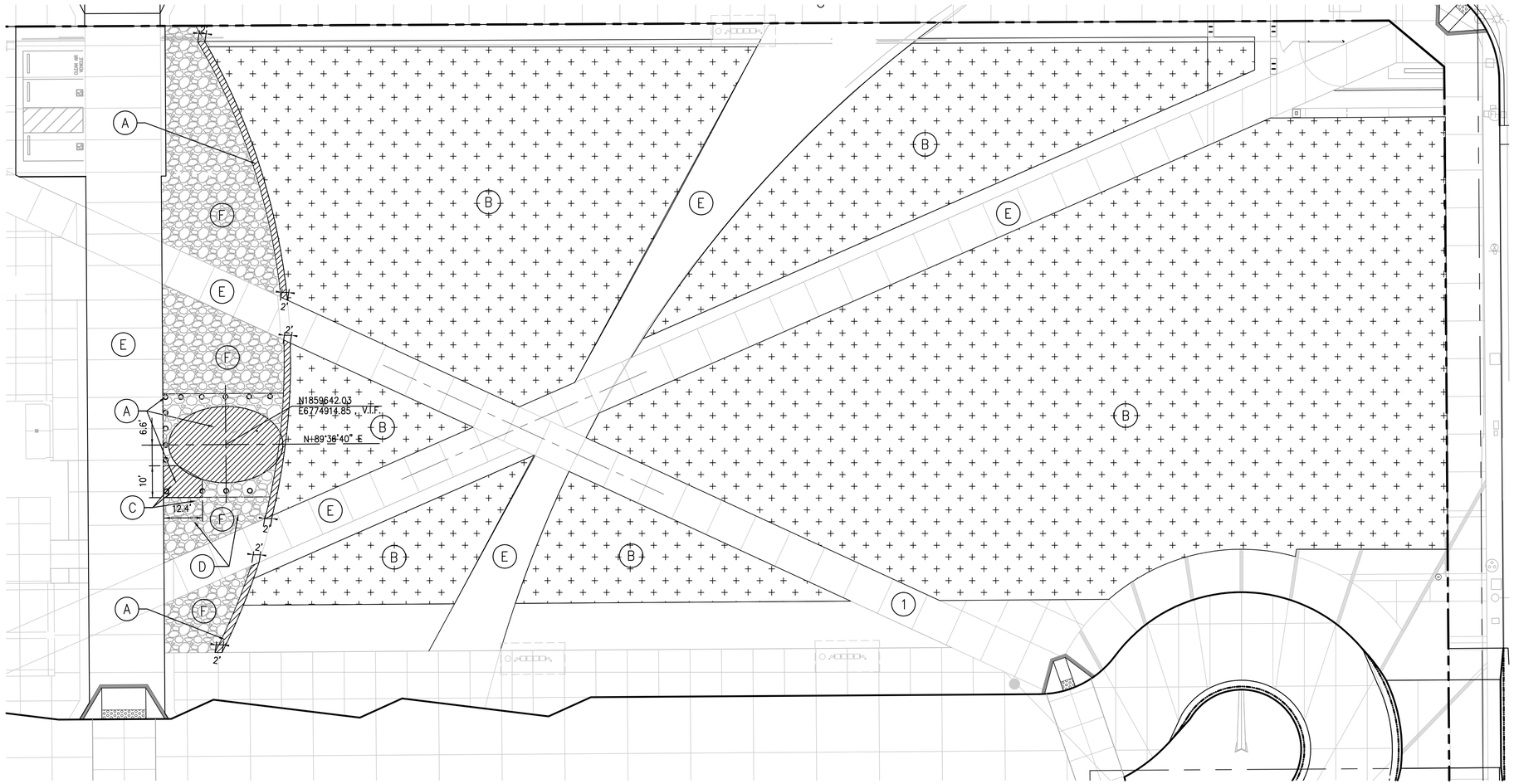

DEMOLITION NOTES

- (A) REMOVE EXISTING DECORATIVE GRAVEL, REPLACE IN KIND AROUND NEW CONCRETE PAD AND BOLLARDS. SEE C-204, A-101C FOR PAD AND BOLLARD LAYOUT.
- (B) PREPARE SOIL FOR LANDSCAPE TREATMENT AS PER SPEC SECTIONS 32 22 19, 32 93 00
- (C) (3) EXISTING UTILITY PULLBOX, V.I.F. , PROTECT IN PLACE.
- (D) (2) EXISTING TREES, V.I.F. , PROTECT IN PLACE.
- (E) EXISTING PATHWAY, PROTECT IN PLACE.
- (F) EXISTING DECORATIVE GRAVEL, PROTECT IN PLACE.

DEMOLITION PLAN

1"=20'

N

20 0 20 40

1"=20'

REV.	DATE		BY / SUB.	APP.
	08.08.16	GENERATOR/LANDSCAPE MODIFICATION BID SET		

DESIGNED BY C.CHRISTOPLIS
DRAWN BY E.GUERRERO
CHECKED BY M.MAH
APPROVED BY R.JANIK
DATE 08.08.16

OmniTrans — Connecting Our Communities
Governments SANBAG Working Together — SAN BERNARDINO ASSOCIATED GOVERNMENTS
HDR — 801 S. GRAND AVENUE, Suite 500, Los Angeles, Ca 90017-4633

SUBMITTED: _____ PROJECT MANAGER

APPROVED: _____

REGISTERED PROFESSIONAL ENGINEER — CHARLES CHRISTOPLIS — No. 045870 — Exp. 12/31/16 — CIVIL — STATE OF CALIFORNIA

TRANSIT CENTER

DEMOLITION PLAN – OVERALL SITE

CONTRACT NO. IFB 16-1001520
DRAWING NO. C-203
REVISION
SHEET NO. OF
SCALE 1"=20'

C:\pwworking\sac\d0585518\191207-C-203.dwg, C-203 - DEMOLLAYOUT-GRADING PLAN-SENSET, 8/26/2016 1:40:33 PM, EGUERRER

GENERAL NOTES

1. SEE A-101C FOR BOLLARD AND EQUIPMENT PAD DIMENSIONS AT GENERATOR AREA

LAYOUT CONSTRUCTION NOTES

(1) CONSTRUCT 6" PCC PAVEMENT OVER 6" CAB, WIDTH PER PLAN, COLD JOINT BETWEEN NEW AND EXISTING. SEE SHEET L-101 FOR CONCRETE FINISH, SEE 7/L-401 FOR EQUIPMENT PAD DETAIL.

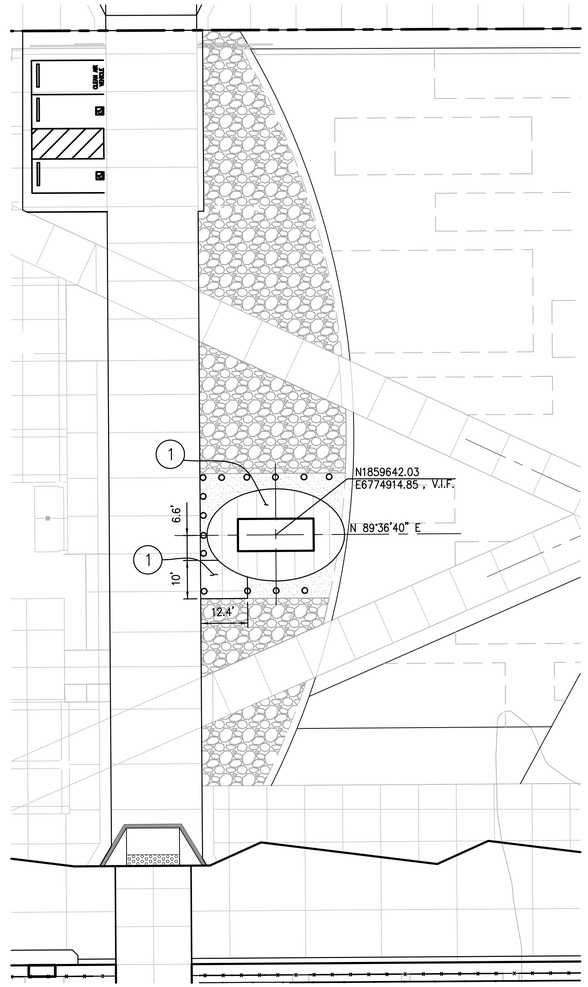

LAYOUT PLAN
1"=20'

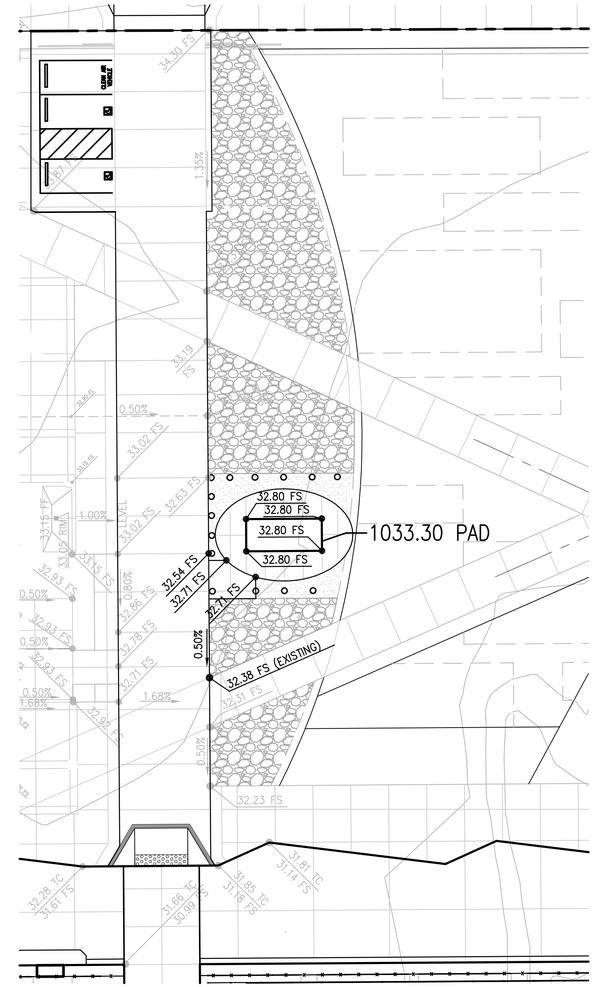

GRADING PLAN
1"=20'

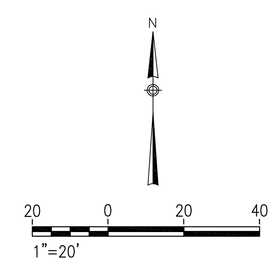

REV.	DATE		BY	SUB.	APP.
	08.08.16	GENERATOR/LANDSCAPE MODIFICATION BID SET			

DESIGNED BY C.CHRISTOPLIS
DRAWN BY E.GUERRERO
CHECKED BY M.MAH
APPROVED BY R.JANIK
DATE 08.08.16

OmniTrans
Governments SANBAG Working Together
SAN BERNARDINO ASSOCIATED GOVERNMENTS

HDR
801 S. GRAND AVENUE
Suite 500
Los Angeles, Ca 90017-4633

SUBMITTED: _____ PROJECT MANAGER

APPROVED: _____

REGISTERED PROFESSIONAL ENGINEER
CHARLES CHRISTOPLIS
No. 045870
Exp. 12/31/16
CIVIL
STATE OF CALIFORNIA

TRANSIT CENTER

LAYOUT & GRADING PLAN
– GENERATOR AREA

CONTRACT NO. IFB 16-1001520
DRAWING NO. C-204
REVISION
SHEET NO. OF
SCALE 1"=20'

C:\pwworking\sacd\d0889518\181207-C-204.dwg, C-204 - DEMO-LAYOUT-GRADING PLAN-GENSET, 8/26/2016 1:42:06 PM, EGUERRER

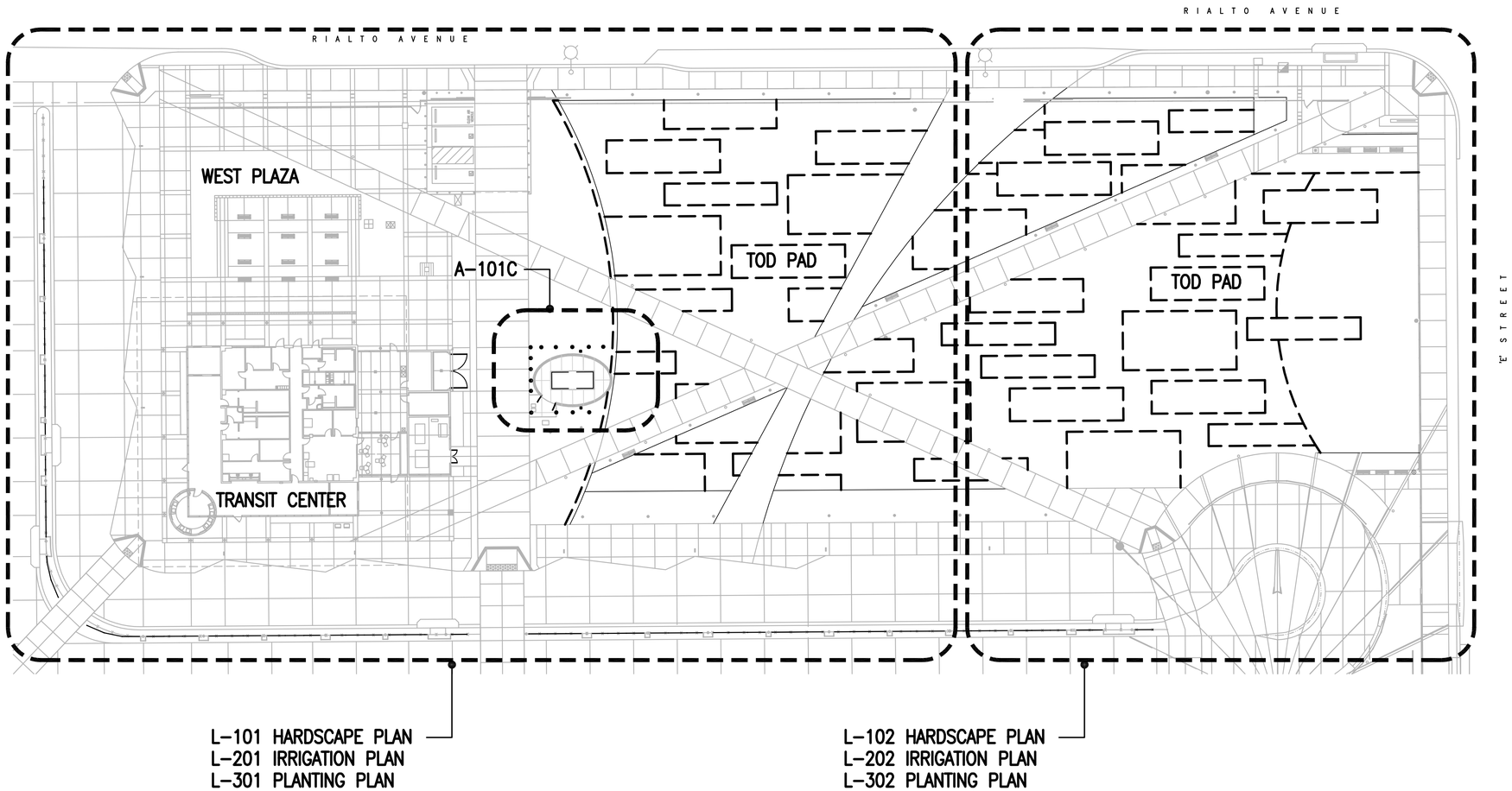

SITE KEY PLAN
1"=30'-0"

1
L-100

REV.	DATE		BY / SUB.	APP.
	08.08.16	GENERATOR/LANDSCAPE MODIFICATION BID SET		

DESIGNED BY	H. HABIG
DRAWN BY	M. CLARKE
CHECKED BY	A. COTTINI
APPROVED BY	R. JANIK
DATE	08.08.16

OmniTrans

Governments SANBAG Working Together

SAN BERNARDINO ASSOCIATED GOVERNMENTS

HDR
801 S. GRAND AVENUE
Suite 500
Los Angeles, Ca 90017-4633

SUBMITTED: _____ PROJECT MANAGER

APPROVED: _____

LICENSED LANDSCAPE ARCHITECT
HEATH HABIG LIC. #5208
Signature
October 31, 2016
Renewal Date
August 2, 2016
Date
STATE OF CALIFORNIA

TRANSIT CENTER

LANDSCAPE SITE KEY PLAN

CONTRACT NO. IFB 16-1001520
DRAWING NO. L-100
REVISION
SHEET NO. OF
SCALE 1"=30'-0"

C:\pwworking\sac\d0735382\818207L-100.dwg, L-100, 8/26/2016 1:47:39 PM, EGUERRER

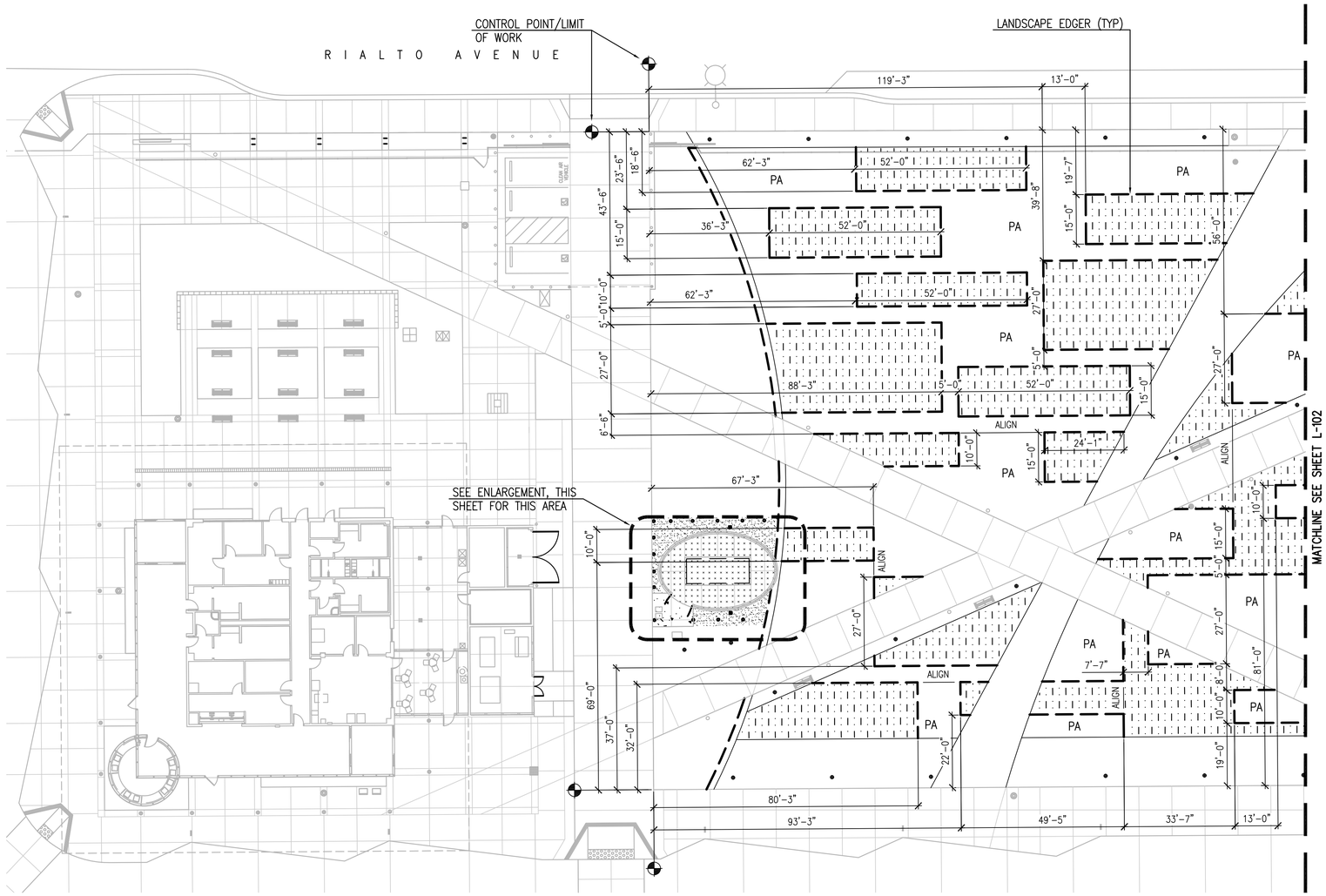

HARDSCAPE PLAN 1/L-101
1"=20'-0"

HARDSCAPE LEGEND

- DECORATIVE GRAVEL TO MATCH EXISTING
- DECORATIVE GRAVEL TYPE I
- CONCRETE TYPE 1
- CONCRETE TYPE 2
- LANDSCAPE EDGER 2/L-401
- BOLLARD 1/L-401
- EXISTING TREES
- PA PLANTING AREA – SEE PLANTING PLANS

HARDSCAPE AND LAYOUT NOTES

1. SEE SPECIFICATIONS FOR MATERIAL SAMPLE AND INSPECTION REQUIREMENTS
2. LAYOUT AND STAKE ALL PATHS FOR APPROVAL WITH OWNER COORDINATION PRIOR TO CONSTRUCTION

CONCRETE FINISHES:

TYPE 1 INTEGRAL COLOR – #5447 MIAMI BUFF, EXPOSED AGGREGATE
TYPE 2 NATURAL GRAY, FLOAT

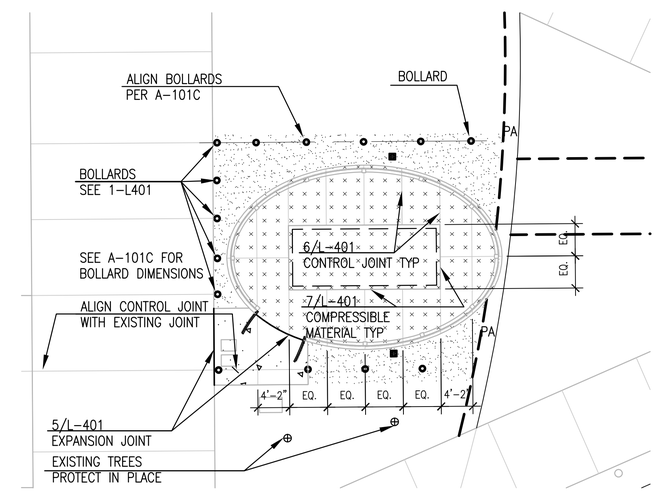

ENLARGED PAVING PLAN 2/L-101
1"=10'-0"

REV.	DATE		BY / SUB.	APP.
	08.08.16	GENERATOR/LANDSCAPE MODIFICATION BID SET		

DESIGNED BY	H. HABIG
DRAWN BY	M. CLARKE
CHECKED BY	A. COTTINI
APPROVED BY	R. JANIK
DATE	08.08.16

OmniTrans
Governments SANBAG Working Together
SAN BERNARDINO ASSOCIATED GOVERNMENTS
HDR 801 S. GRAND AVENUE Suite 500 Los Angeles, Ca 90017-4633
SUBMITTED: _____ PROJECT MANAGER
APPROVED: _____

LICENSED LANDSCAPE ARCHITECT HEATH HABIG LIC. #5020 Signature October 31, 2016 Renewal Date August 2, 2016 Date STATE OF CALIFORNIA

TRANSIT CENTER

HARDSCAPE PLAN

CONTRACT NO. IFB 16-1001520
DRAWING NO. L-101
REVISION
SHEET NO. OF
SCALE AS NOTED

C:\pwworking\sac\d0755\D2818120\71-101.dwg, L101, 8/26/2016 1:49:30 PM, EGUERRER

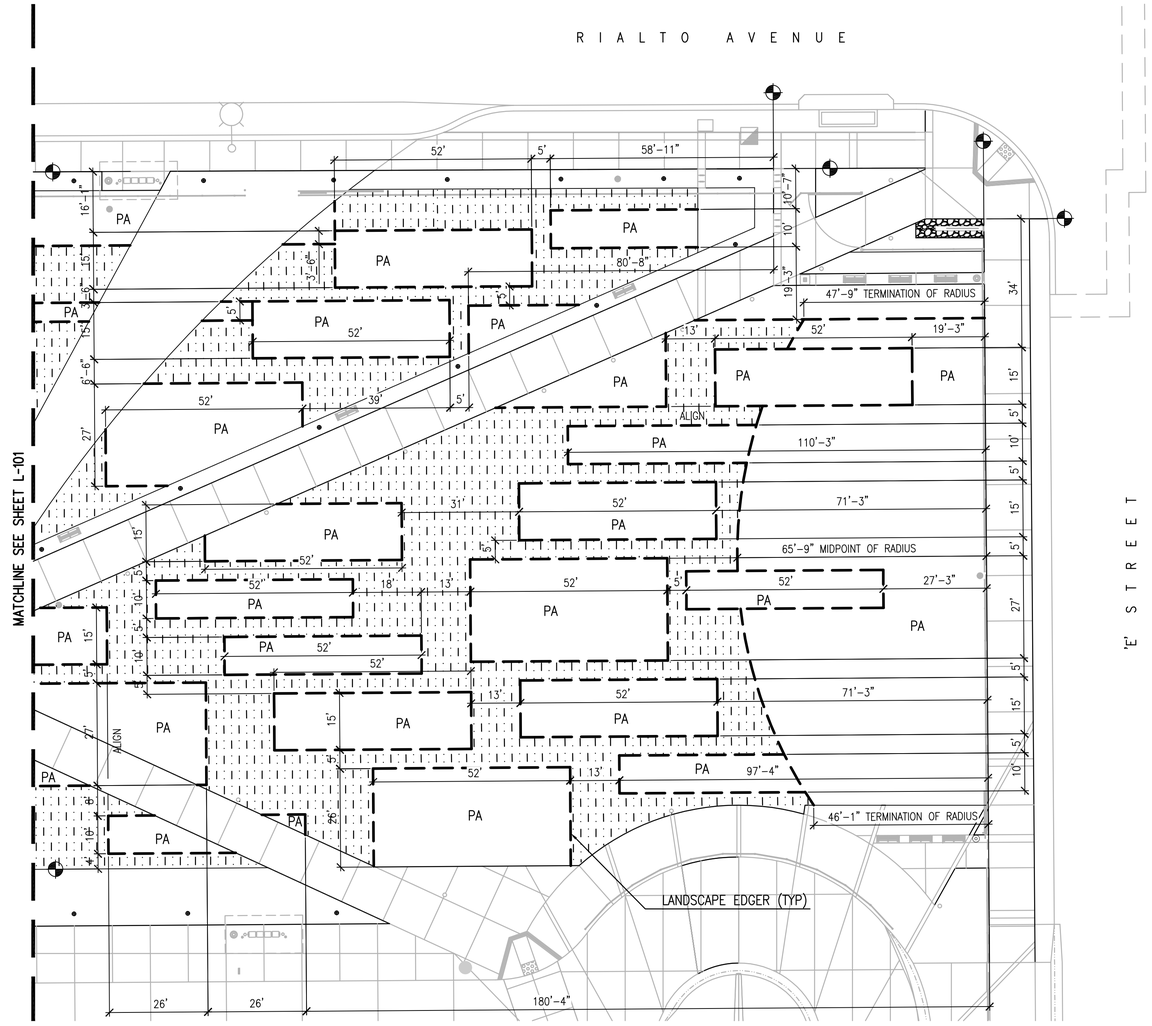

HARDSCAPE LEGEND

- DECORATIVE GRAVEL TO MATCH EXISTING
- DECORATIVE GRAVEL TYPE I
- CONCRETE TYPE 1
- CONCRETE TYPE 2
- LANDSCAPE EDGER (2 / L-401)
- BOLLARD (1 / L-401)
- EXISTING TREES
- PA — PLANTING AREA – SEE PLANTING PLANS

HARDSCAPE AND LAYOUT NOTES

1. SEE SPECIFICATIONS FOR MATERIAL SAMPLE AND INSPECTION REQUIREMENTS
2. LAYOUT AND STAKE ALL PATHS FOR APPROVAL WITH OWNER COORDINATION PRIOR TO CONSTRUCTION

CONCRETE FINISHES:

TYPE 1 INTEGRAL COLOR – #5447 MIAMI BUFF, EXPOSE
TYPE 2 NATURAL GRAY, FLOAT

N

HARDSCAPE PLAN (1 / L-102)
1"=20'-0"

REV.	DATE		BY	SUB.	APP.
	08.08.16	GENERATOR/LANDSCAPE MODIFICATION BID SET			

DESIGNED BY H. HABIG
DRAWN BY M. CLARKE
CHECKED BY A. COTTINI
APPROVED BY R. JANIK
DATE 08.08.16

OmniTrans
Governments SANBAG Working Together
SAN BERNARDINO ASSOCIATED GOVERNMENTS

HDR
801 S. GRAND AVENUE
Suite 500
Los Angeles, Ca 90017-4633

SUBMITTED: _____ PROJECT MANAGER
APPROVED: _____

LICENSED LANDSCAPE ARCHITECT
HENRY HABIG UC #4209
Signature
October 31, 2016
Renewal Date
August 2, 2016
Date
STATE OF CALIFORNIA

TRANSIT CENTER

HARDSCAPE PLAN

CONTRACT NO. IFB 16-1001520
DRAWING NO. L-102
REVISION
SHEET NO. OF
SCALE 1"=20'-0"

C:\pwworking\sac\d0703583\181207\L-102.dwg, L-102, 8/26/2016 1:51:01 PM, EGUERRER

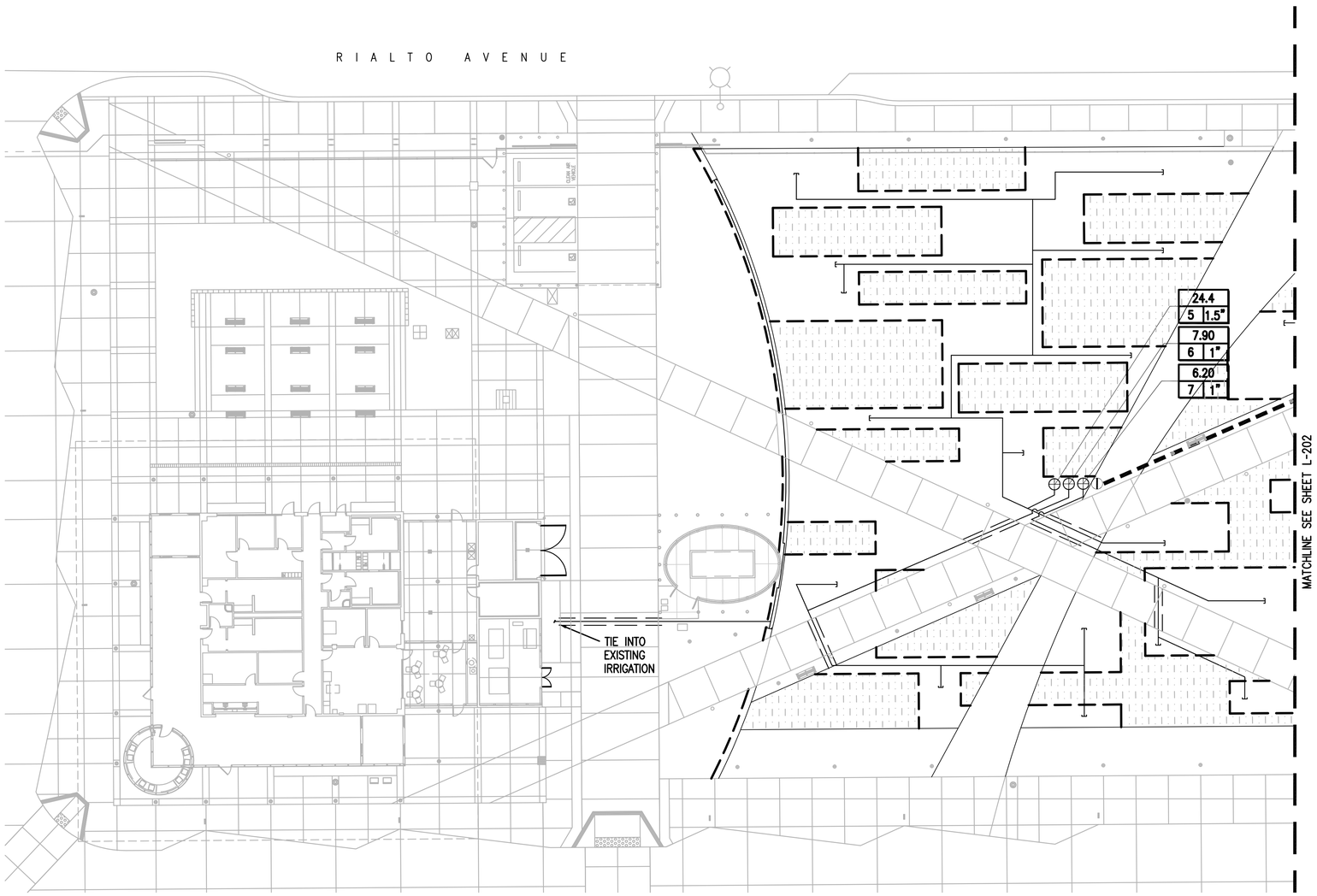

IRRIGATION LEGEND

	COMPONENT	VENDOR	MODEL/NOTES
	POINT OF CONNECTION		DESIGNED TO 95 PSI, CONFIRM
	CONTROLLER	HUNTER	I-CORE WITH WSS-SEN OR EQUAL, IN LOCKABLE SS CABINET
BF	BACKFLOW PREVENTER	FEBCO	825Y – 2"
	DRIP CONTROL KIT	HUNTER	ICZ-101-25-R
M	MASTER CONTROL VALVE	HUNTER	ICV-201G-R
	GATE VALVE	SPEARS	
PR	PRESSURE REGULATOR	WILKINS	
	MAIINLINE		2" UNLESS OTHERWISE NOTED
	DRIP LINE (PVC TO POLYETHYLENE CONNECTION)		1" PVC SCHEDULE 40 UNLESS OTHERWISE NOTED
	SLEEVING		SCHEDULE 40 PVC PIPE, 2xø PIPE TO BE SLEEVED

0.06 — GPM
0 x" — SIZE
STATION #

EMITTER SCHEDULE

PLANT SIZE	# OF EMITTERS	TOTAL GPH (GALLONS PER HOUR)
5 GALLON	2	4

IRRIGATION NOTES

1. SEE L-100 SERIES FOR HARDSCAPE INFORMATION
2. SEE L-300 SERIES FOR PLANTING INFORMATION
3. CONTRACTOR SHALL VERIFY FIELD CONDITIONS BEFORE WORK BEGINS
4. VERIFY PRESSURE AT POINT OF CONNECTION
5. IRRIGATION PLANS ARE DIAGRAMMATIC – ACTUAL LOCATION OF IRRIGATION IMPROVEMENTS SHALL BE INSTALLED IN PLANTED AREAS AND TRENCHES ARE TO BE SHARED, WHERE FEASIBLE
6. ALL PIPE INSTALLED UNDER PAVEMENT IS TO BE SLEEVED, SEE DETAIL 7 ON SHEET L-402
7. ALL IRRIGATION SYSTEM COMPONENTS TO BE MANUFACTURED FOR USE WITH RECLAIMED WATER AND PERMANENTLY MARKED AND COLOR-CODED AS SUCH PER LOCAL REGULATIONS
8. REPAIR EXISTING IRRIGATION SYSTEM DAMAGED DURING CONSTRUCTION ACTIVITIES ALL REPAIRS SHOULD RESTORE IRRIGATION SYSTEM TO PRE-CONSTRUCTION CONDITION

N

IRRIGATION PLAN
1"=20'-0"

1
L-201

REV.	DATE		BY	SUB.	APP.
	08.08.16	GENERATOR/LANDSCAPE MODIFICATION BID SET			

DESIGNED BY H. HABIG
DRAWN BY M. CLARKE
CHECKED BY A. COTTINI
APPROVED BY R. JANIK
DATE 08.08.16

OmniTrans
Governments SANBAG Working Together
SAN BERNARDINO ASSOCIATED GOVERNMENTS

HDR
801 S. GRAND AVENUE
Suite 500
Los Angeles, Ca 90017-4633

SUBMITTED: _____ PROJECT MANAGER
APPROVED: _____

LICENSED LANDSCAPE ARCHITECT
HEATH HABIG LIC. #5320
Signature
October 31, 2016
Renewal Date
August 2, 2016
Date
STATE OF CALIFORNIA

TRANSIT CENTER

IRRIGATION PLAN

CONTRACT NO. IFB 16-1001520
DRAWING NO. L-201
REVISION
SHEET NO. OF
SCALE 1"=20'-0"

C:\pwworking\sac\d0705\D2618\D2071-201.dwg, L201, 8/26/2016 1:53:37 PM, EGUERRER

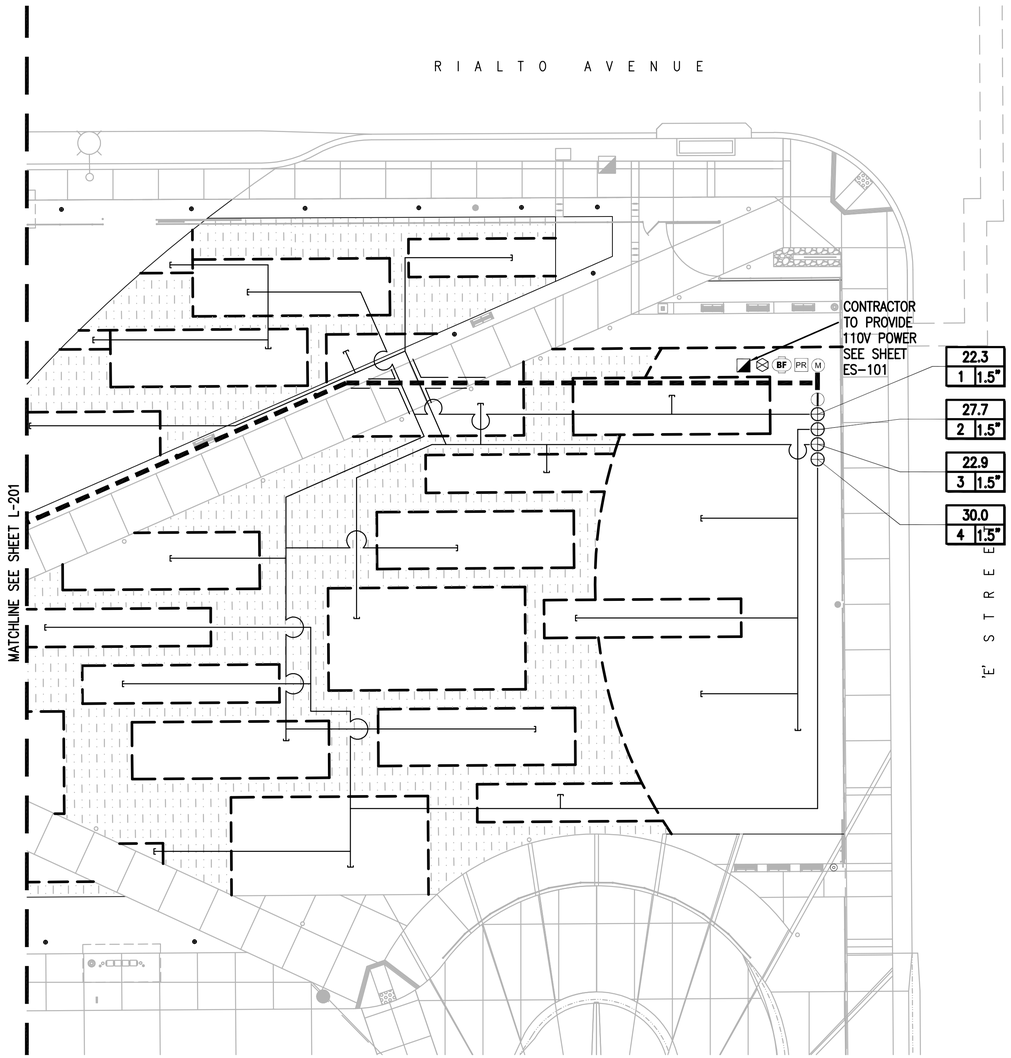

IRRIGATION LEGEND

	COMPONENT	VENDOR	MODEL/NOTES
	POINT OF CONNECTION		DESIGNED TO 95 PSI, CONFIRM
	CONTROLLER	HUNTER	I-CORE WITH WSS-SEN OR EQUAL, IN LOCKABLE SS CABINET
BF	BACKFLOW PREVENTER	FEBCO	825Y – 2"
	DRIP CONTROL KIT	HUNTER	ICZ-101-25-R
M	MASTER CONTROL VALVE	HUNTER	ICV-201G-R
	GATE VALVE	SPEARS	
PR	PRESSURE REGULATOR	WILKINS	
	MAIINLINE		2" UNLESS OTHERWISE NOTED
	DRIP LINE (PVC TO POLYETHYLENE CONNECTION)		1" PVC SCHEDULE 40 UNLESS OTHERWISE NOTED
	SLEEVING		SCHEDULE 40 PVC PIPE, 2xø PIPE TO BE SLEEVED

0.00 — GPM
0 | x" — SIZE
STATION #

EMITTER SCHEDULE

PLANT SIZE	# OF EMITTERS	TOTAL GPH (GALLONS PER HOUR)
5 GALLON	2	4

STATE OF CALIFORNIA MODEL WATER EFFICIENT LANDSCAPE ORDINANCE CALCULATIONS: TRANSIT CENTER GENERATOR

SAN BERNARDINO, CA – CIMIS ZONE 14
TOTAL PLANTED AREA 29,450 sf

AVERAGE MONTHLY WATER DEMAND FOR LANDSCAPE

JAN	FEB	MAR	APR	MAY	JUN	JUL	AUG	SEP	OCT	NOV	DEC	TOTAL
1.55	2.24	3.72	5.10	6.82	7.80	8.68	7.75	5.70	4.03	2.10	1.55	57.04

HYDROZONE	AREA (HA)	PF	PF*HA
NOT IRRIGATED	21,340		
VERY LOW	0	0.09	0
LOW	29,450	0.30	8,835
MEDIUM	0	0.50	0
HIGH	0	0.80	0
TOTAL	50,790 sf		7,271

Eto	57.04
LA	29,450
SLA	0
IE	0.90

HYDROZONE INFORMATION TABLE

#	HYDROZONE	ZONE OR VALVE #	IRRIGATION METHOD	AREA	% TOTAL LANDSCAPE AREA
1	LOW	1,2,3,4,5,6,7	D	29,450	58%
			TOTAL IRRIGATED	29,450	58%
			UNIRRIGATED	21,340	42%

MAWA = (Eto*0.62)(0.7*LA)+(0.3*SLA)
= (57.04*0.62)(0.7*29,450)+(.3*0)
MAWA = 728,946 GALLONS

ETWU = (Eto*0.62)[(PF*HA/IE)+SLA]
= (57.04*0.62)[8,835/0.90)+0]
ETWU = 347,117 GALLONS

IRRIGATION NOTES

1. SEE L-100 SERIES FOR HARDSCAPE INFORMATION
2. SEE L-300 SERIES FOR PLANTING INFORMATION
3. CONTRACTOR SHALL VERIFY FIELD CONDITIONS BEFORE WORK BEGINS
4. VERIFY PRESSURE AT POINT OF CONNECTION
5. IRRIGATION PLANS ARE DIAGRAMMATIC – ACTUAL LOCATION OF IRRIGATION IMPROVEMENTS SHALL BE INSTALLED IN PLANTED AREAS AND TRENCHES ARE TO BE SHARED, WHERE FEASIBLE
6. ALL PIPE INSTALLED UNDER PAVEMENT IS TO BE SLEEVED, SEE DETAIL 7 ON SHEET L-402
7. ALL IRRIGATION SYSTEM COMPONENTS TO BE MANUFACTURED FOR USE WITH RECLAIMED WATER AND PERMANENTLY MARKED AND COLOR-CODED AS SUCH PER LOCAL REGULATIONS
8. REPAIR EXISTING IRRIGATION SYSTEM DAMAGED DURING CONSTRUCTION ACTIVITIES ALL REPAIRS SHOULD RESTORE IRRIGATION SYSTEM TO PRE-CONSTRUCTION CONDITION

N

IRRIGATION PLAN
1"=20'-0"
1 / L-202

REV.	DATE		BY / SUB.	APP.
	08.08.16	GENERATOR/LANDSCAPE MODIFICATION BID SET		

DESIGNED BY	H. HABIG
DRAWN BY	M. CLARKE
CHECKED BY	A. COTTINI
APPROVED BY	R. JANIK
DATE	08.08.16

OmniTrans
Governments SANBAG Working Together
SAN BERNARDINO ASSOCIATED GOVERNMENTS
HDR 801 S. GRAND AVENUE Suite 500 Los Angeles, Ca 90017-4633
SUBMITTED: PROJECT MANAGER
APPROVED:

LICENSED LANDSCAPE ARCHITECT HEATH HABIG LIC. # 5020 Signature October 31, 2016 Renewal Date August 2, 2016 Date STATE OF CALIFORNIA

TRANSIT CENTER

IRRIGATION PLAN

CONTRACT NO. IFB 16-1001520
DRAWING NO. L-202
REVISION
SHEET NO. OF
SCALE 1"=20'-0"

C:\pwworking\sac\d0705382\B10721-L202.dwg, L202, 9/26/2016 1:55:06 PM, EGUERRER

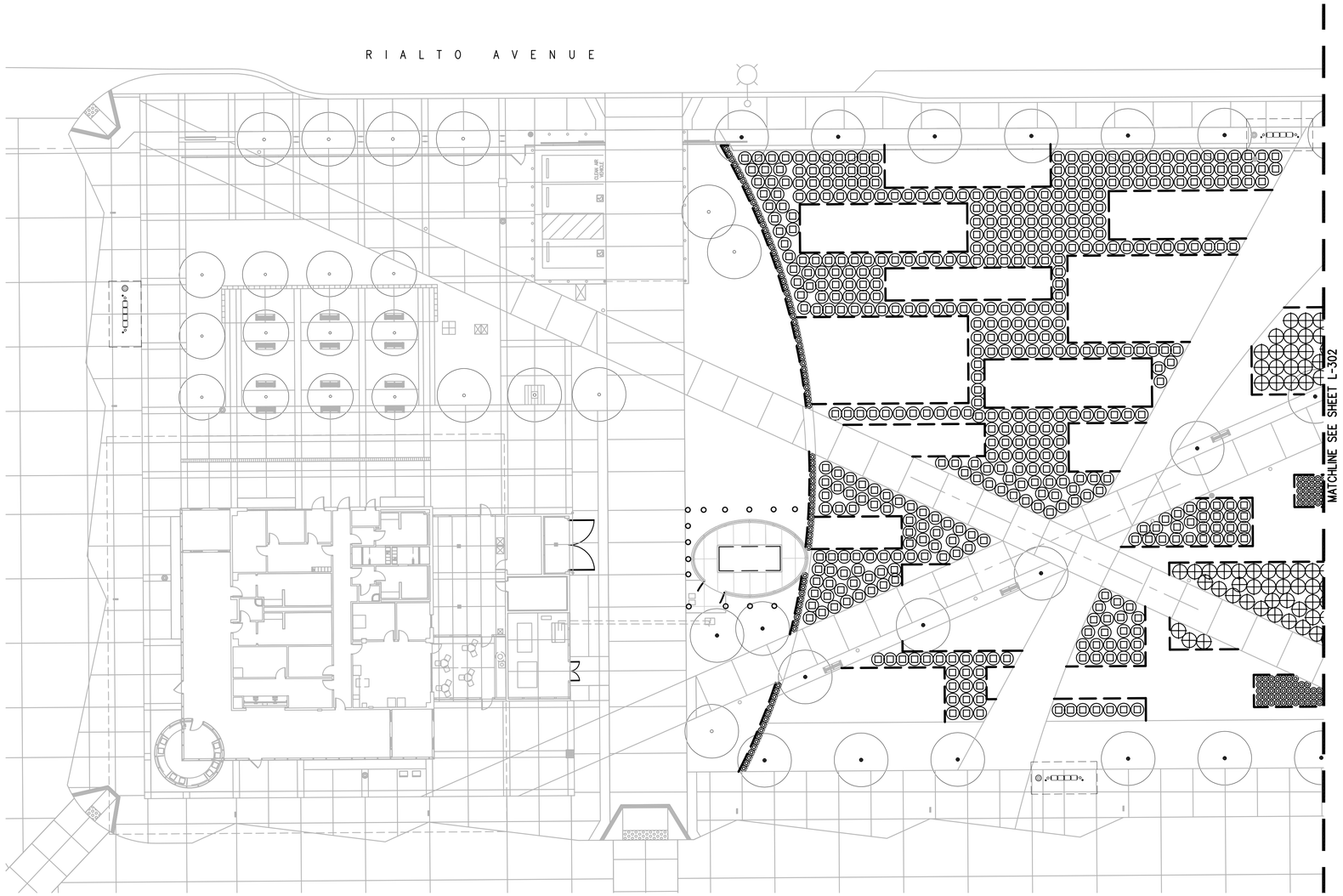

LANDSCAPE LEGEND			SIZE	QUANTITY
⊕	PENNISETUM ORIENTALE	CHINESE FOUNTAIN GRASS	5 GAL	54
⊡	PHORMIUM 'BRONZE BABY'	BRONZE NEW ZEALAND FLAX	5 GAL	484
⊙	KNIPHOPIA TRIANGULARIS	DWARF RED HOT POKER PLANT	5 GAL	176
○	EXISTING TREE			

PLANTING NOTES

1. FOR HARDSCAPE LAYOUT SEE L–100 SERIES
2. FOR IRRIGATION PLAN SEE L–200 SERIES
3. FOR LANDSCAPE DETAILS SEE SHEET L–401
4. THE CONTRACTOR SHALL VERIFY THE LOCATION OF EXISTING AND PROPOSED SITE UTILITIES PRIOR TO THE INSTALLATION OF PLANT MATERIAL, AND NOTIFY THE AGENCY'S REPRESENTATIVE OF ANY CONFLICTS
5. THE FINAL LOCATION OF ALL PLANT MATERIAL SHALL BE STAKED FOR REVIEW AND PLANTED ONLY UPON APPROVAL
6. PROVIDE 3" BARK MULCH UNDER ALL PLANTINGS, SEE SPECIFICATIONS
7. PERFORM WORK IN ACCORDANCE WITH THE AMERICAN ASSOCIATION OF NURSERYMEN STANDARDS
8. PLANT MATERIALS SHALL BE GUARANTEED FOR A PERIOD OF ONE YEAR BEYOND THE TIME OF PLANTING

N

PLANTING PLAN
1"=20'–0"
1 / L–301

REV.	DATE		BY / SUB	APP.
	08.08.16	GENERATOR/LANDSCAPE MODIFICATION BID SET		

DESIGNED BY	H. HABIG
DRAWN BY	M. CLARKE
CHECKED BY	A. COTTINI
APPROVED BY	R. JANIK
DATE	08.08.16

OmniTrans

Governments SANBAG Working together

SAN BERNARDINO ASSOCIATED GOVERNMENTS

FDR
801 S. GRAND AVENUE
Suite 500
Los Angeles, Ca 90017–4633

SUBMITTED: _____ PROJECT MANAGER

APPROVED: _____

LICENSED LANDSCAPE ARCHITECT
HEATHER HABIG LIC #4503
Signature
October 31, 2016
Renewal Date
August 2, 2016
Date
STATE OF CALIFORNIA

TRANSIT CENTER

PLANTING PLAN

CONTRACT NO. IFB 16–1001520
DRAWING NO. L–301
REVISION
SHEET NO. OF
SCALE 1"=20'–0"

C:\pwworking\sac\d0705382\d1812071-301.dwg, L301, 8/28/2016 1:57:47 PM, EQUERRER

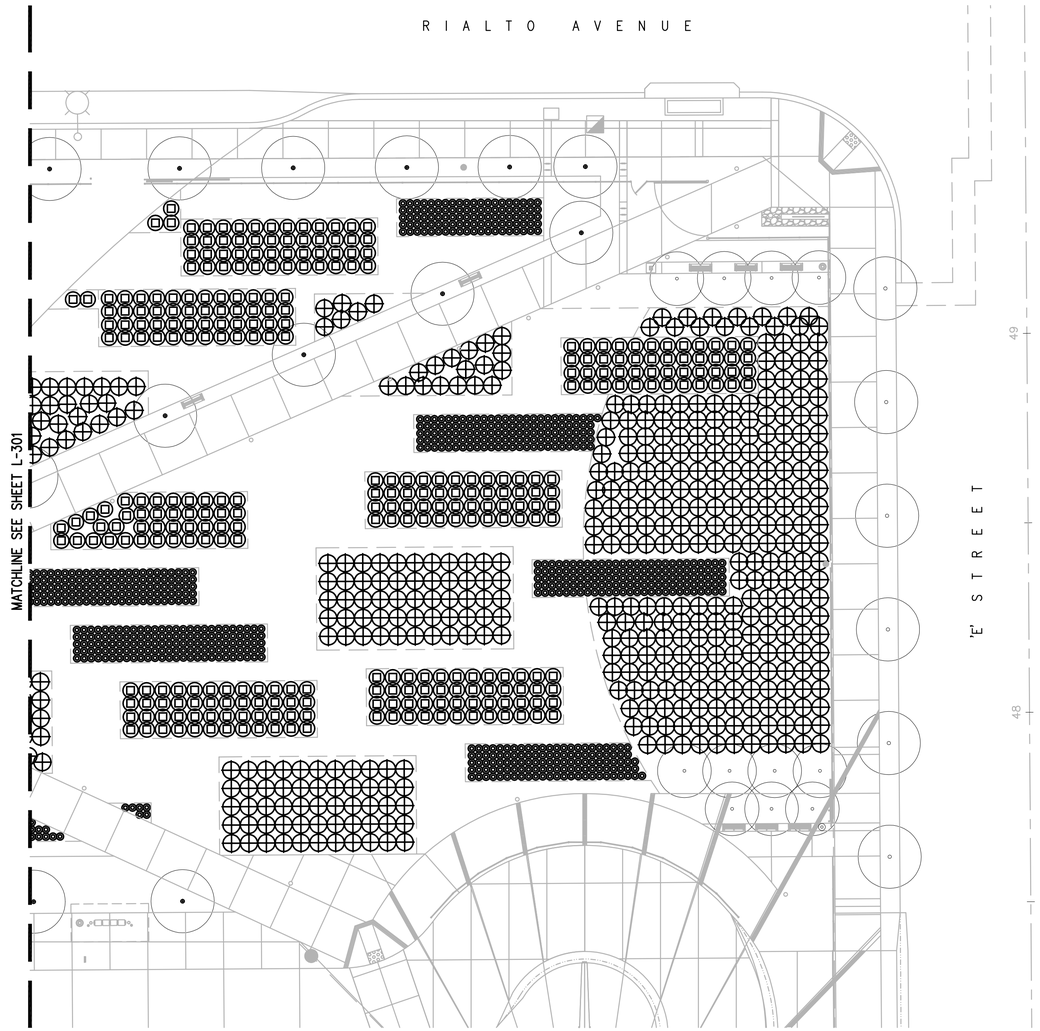

LANDSCAPE LEGEND			SIZE	QUANTITY
⊕	PENNISETUM ORIENTALE	CHINESE FOUNTAIN GRASS	5 GAL	54
⊡	PHORMIUM 'BRONZE BABY'	BRONZE NEW ZEALAND FLAX	5 GAL	484
⊙	KNIPHOPIA TRIANGULARIS	DWARF RED HOT POKER PLANT	5 GAL	176
○	EXISTING TREE			

PLANTING NOTES

1. FOR HARDSCAPE LAYOUT SEE L–100 SERIES
2. FOR IRRIGATION PLAN SEE L–200 SERIES
3. FOR LANDSCAPE DETAILS SEE SHEET L–401
4. THE CONTRACTOR SHALL VERIFY THE LOCATION OF EXISTING AND PROPOSED SITE UTILITIES PRIOR TO THE INSTALLATION OF PLANT MATERIAL, AND NOTIFY THE AGENCY'S REPRESENTATIVE OF ANY CONFLICTS
5. THE FINAL LOCATION OF ALL PLANT MATERIAL SHALL BE STAKED FOR REVIEW AND PLANTED ONLY UPON APPROVAL
6. PROVIDE 3" BARK MULCH UNDER ALL PLANTINGS, SEE SPECIFICATIONS
7. PERFORM WORK IN ACCORDANCE WITH THE AMERICAN ASSOCIATION OF NURSERYMEN STANDARDS
8. PLANT MATERIALS SHALL BE GUARANTEED FOR A PERIOD OF ONE YEAR BEYOND THE TIME OF PLANTING

N

PLANTING PLAN
1"=20'–0"

1
L–302

REV.	DATE		BY / SUB.	APP.
	08.08.16	GENERATOR/LANDSCAPE MODIFICATION BID SET		

DESIGNED BY	H. HABIG
DRAWN BY	M. CLARKE
CHECKED BY	A. COTTINI
APPROVED BY	R. JANIK
DATE	08.08.16

OmniTrans
Governments SANBAG Working Together
SAN BERNARDINO ASSOCIATED GOVERNMENTS

HDR
801 S. GRAND AVENUE
Suite 500
Los Angeles, Ca 90017–4633

SUBMITTED: _____ PROJECT MANAGER

APPROVED: _____

LICENSED LANDSCAPE ARCHITECT
HEATH HABIG LA# 5320
Signature
October 31, 2016
Renewal Date
August 2, 2016
Date
STATE OF CALIFORNIA

TRANSIT CENTER

PLANTING PLAN

CONTRACT NO. IFB 16–1001520
DRAWING NO. L–302
REVISION
SHEET NO. OF
SCALE 1"=20'–0"

C:\pwworking\sac\d0705\D2618\D2074-302.dwg, L302, 8/26/2016 2:02:22 PM, EGUERRER

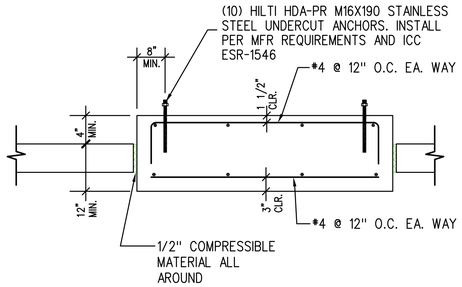

NOTES:
1. SEE CIVIL FOR LOCATION AND ARCHITECTURAL FOR DIMENSIONS OF PADS.
2. SEE MFR DWG'S FOR DETAILS OF EQUIPMENT SUPPORTS, ISOLATORS OR OTHERS.

CONCRETE EQUIPMENT PAD (7 / L-401)
3/4"=1'-0"

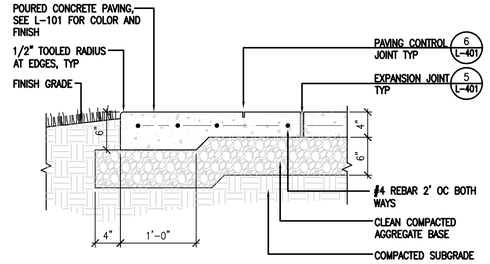

NOTES:
1. THICKENED EDGE CONDITION OCCURS AT ALL HARDSCAPE/PLANTING EDGES
2. MINIMUM THICKNESS AND DEPTH OF BASE AND REINFORCING PER STRUCTURAL ENGINEER
3. PEDESTRIAN CONCRETE CONDITION SHOWN; SEE CIVIL FOR VEHICULAR CONCRETE PAVING NOTES
4. SEE SPECIFICATIONS

CONCRETE PAVING (4 / L-401)
NOT TO SCALE

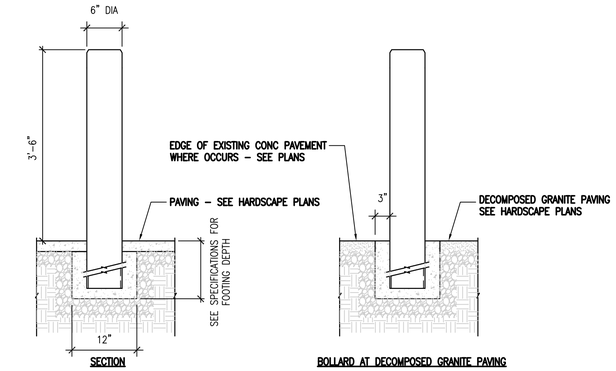

NOTES:
1. SEE HARDSCAPE PLANS FOR BOLLARD LOCATIONS
2. SEE SPECIFICATION 05 50 10 FOR FINISH AND COLOR INFORMATION

FIXED BOLLARD (1 / L-401)
NOT TO SCALE

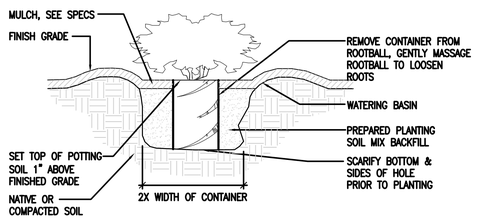

SHRUB PLANTING (8 / L-401)
NOT TO SCALE

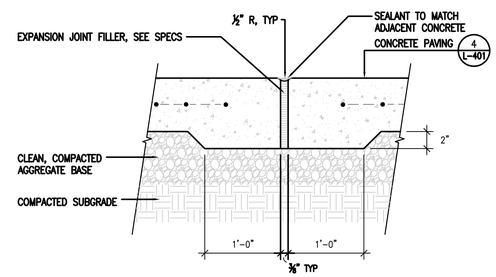

EXPANSION JOINT (5 / L-401)
NOT TO SCALE

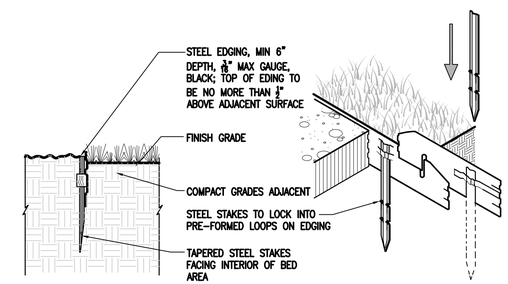

LANDSCAPE EDGER (2 / L-401)
NOT TO SCALE

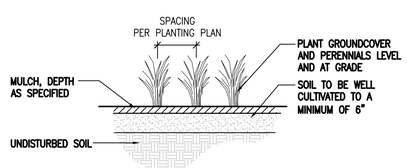

NOTES:
1. KEEP PLANTS MOIST AND SHADED UNTIL PLANTING
2. IN CLAY SOIL, WORK IN TOPSOIL AND ORGANIC COMPOST; SEE SPECS FOR RATIO AND QUANTITY
3. IN SANDY SOIL, ADD ORGANIC COMPOST AND AGED MANURE; SEE SPECS FOR RATIO AND QUANTITY

GROUNDCOVER PLANTING (9 / L-401)
NOT TO SCALE

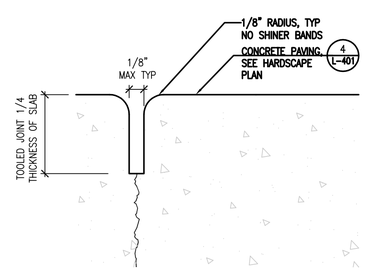

CONTROL JOINT (6 / L-401)
NOT TO SCALE

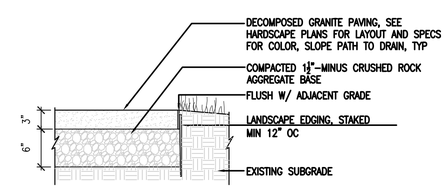

DECOMPOSED GRANITE PAVING (3 / L-401)
NOT TO SCALE

REV.	DATE		BY / SUB	APP.
	08.08.16	GENERATOR/LANDSCAPE MODIFICATION BID SET		

DESIGNED BY	H. HABIG
DRAWN BY	M. CLARKE
CHECKED BY	A. COTTINI
APPROVED BY	R. JANIK
DATE	08.08.16

OmniTrans
Governments SANBAG Working Together
SAN BERNARDINO ASSOCIATED GOVERNMENTS

HDR
801 S. GRAND AVENUE
Suite 500
Los Angeles, Ca 90017-4633

SUBMITTED: _____ PROJECT MANAGER
APPROVED: _____

LICENSED LANDSCAPE ARCHITECT
HENRY HABIG LIC #5208
Signature
October 31, 2016
Renewal Date
August 2, 2016
Date
STATE OF CALIFORNIA

TRANSIT CENTER

LANDSCAPE DETAILS

CONTRACT NO. IFB 16-1001520
DRAWING NO. L-401
REVISION
SHEET NO. OF
SCALE AS NOTED

C:\pwworking\sac\d0703583\B12071L-401.dwg, L401, 8/26/2016 2:05:16 PM, EGUERRER

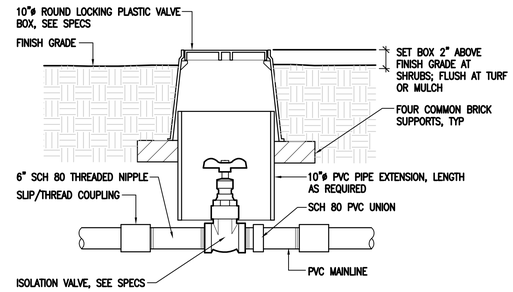

NOTE
1. GATE VALVE SHALL BE INSTALLED IN SHRUB AREAS UNLESS OTHERWISE APPROVED
2. SHOULD VALVE OCCUR IN PAVED AREAS, BOX TO BE CONCRETE WITH CAST-IRON COVER

GATE VALVE
NOT TO SCALE — 4 / L-402

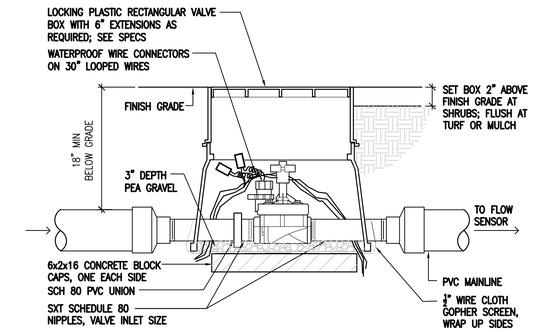

MASTER CONTROL VALVE
NOT TO SCALE — 1 / L-402

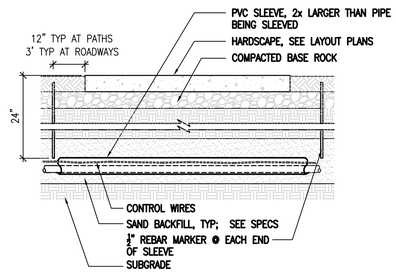

PIPE SLEEVING
NOT TO SCALE — 7 / L-402

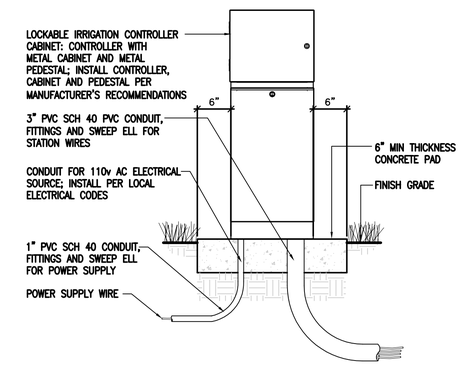

PEDESTAL-MOUNTED CONTROLLER
NOT TO SCALE — 5 / L-402

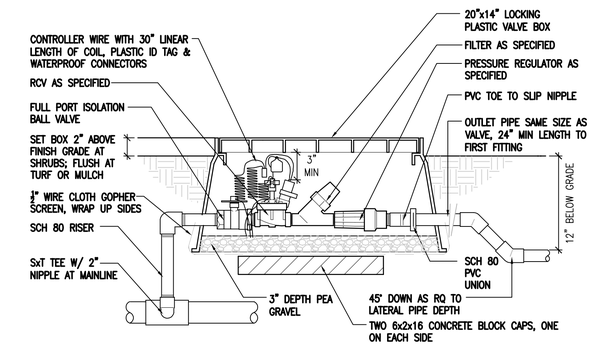

NOTES:
1. BALL VALVES TO BE INSTALLED BEFORE ZONE CLUSTER VALVES, NOT BEFORE EACH INDIVIDUAL REMOTE CONTROL VALVE
2. REMOTE CONTROL VALVE SIM; WITHOUT FILTER AND PRESSURE REGULATOR

DRIP VALVE/REGULATOR
NOT TO SCALE — 2 / L-402

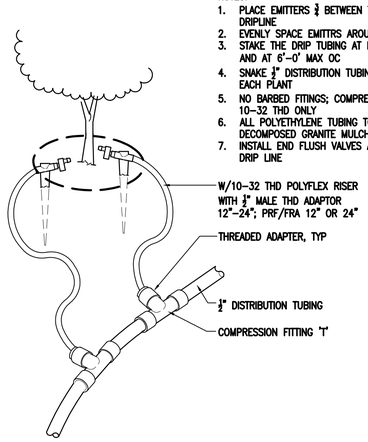

NOTES:
1. PLACE EMITTERS ¾ BETWEEN THE TRUNK AND OUTER DRIPLINE
2. EVENLY SPACE EMITTRS AROUND PLANT
3. STAKE THE DRIP TUBING AT EACH TEE, ELL, COUPLER AND AT 6'-0' MAX OC
4. SNAKE ¼" DISTRIBUTION TUBING WITHIN 12"-24" OF EACH PLANT
5. NO BARBED FITINGS; COMPRESSION, ¼" THD OR 10-32 THD ONLY
6. ALL POLYETHYLENE TUBING TO BE BURIED BENEATH DECOMPOSED GRANITE MULCH
7. INSTALL END FLUSH VALVES AT THE END OF EACH DRIP LINE

DRIP IRRIGATION SYSTEM SCHEMATIC
NOT TO SCALE — 8 / L-402

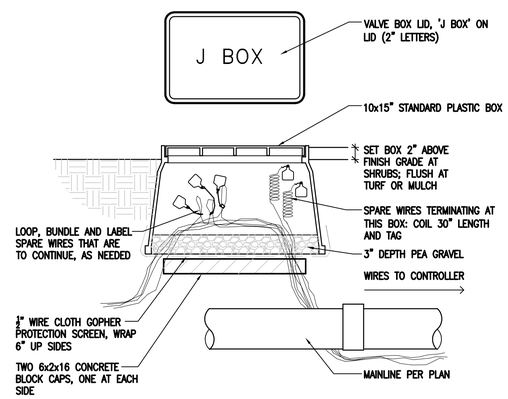

JUNCTION BOX
NOT TO SCALE — 6 / L-402

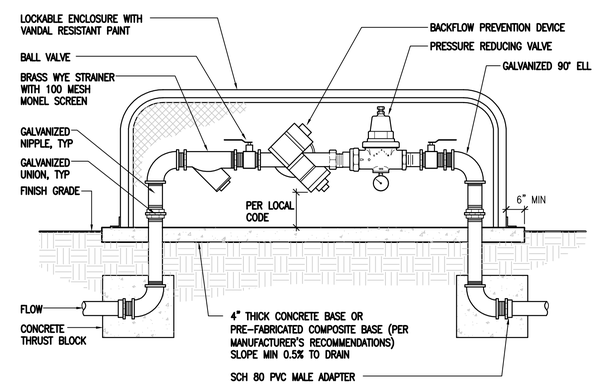

BACKFLOW PREVENTER
NOT TO SCALE — 3 / L-402

REV.	DATE		BY / SUB.	APP.
	08.08.16	GENERATOR/LANDSCAPE MODIFICATION BID SET		

DESIGNED BY	H. HABIG
DRAWN BY	M. CLARKE
CHECKED BY	A. COTTINI
APPROVED BY	R. JANIK
DATE	08.08.16

OmniTrans — Governments SANBAG Working Together — SAN BERNARDINO ASSOCIATED GOVERNMENTS

HDR
801 S. GRAND AVENUE
Suite 500
Los Angeles, Ca 90017-4633

SUBMITTED: _____ PROJECT MANAGER

APPROVED: _____

LICENSED LANDSCAPE ARCHITECT — HENRY HABIG LIC #5208 — Signature — October 31, 2016 Renewal Date — August 2, 2016 Date — STATE OF CALIFORNIA

TRANSIT CENTER

IRRIGATION DETAILS

CONTRACT NO. IFB 16-1001520
DRAWING NO. L-402
REVISION
SHEET NO. OF
SCALE AS NOTED

C:\pwworking\sac\d0703583\B12071L-402.dwg, L402, 8/26/2016 2:07:42 PM, EGUERRER

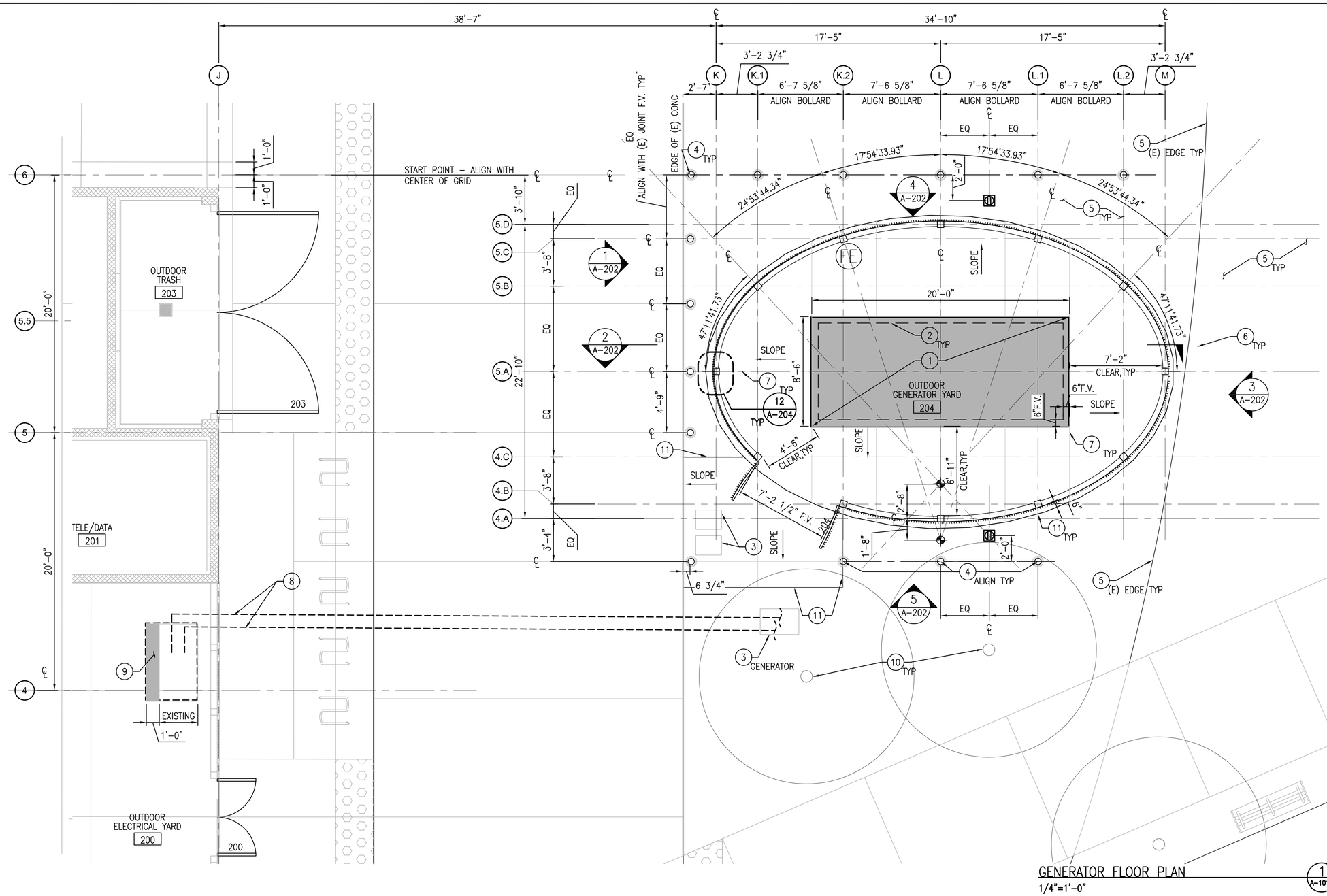

GENERATOR FLOOR PLAN
1/4"=1'-0"

GENERAL NOTES:

1. ALL EXTERIOR WALL DIMENSIONS REFERENCE FACE OF FINISH OR CENTERLINE OF COLUMN UNLESS NOTED OTHERWISE.
2. ALL GRID DIMENSIONS REFERENCE CENTERLINE OF COLUMN UNLESS NOTED OTHERWISE
3. REFER TO SHEET A-202 FOR EQUIPMENT, SIGNAGE AND LIGHTING HEIGHT LOCATIONS, UNO
4. REFER TO CIVIL FOR GRADING ELEVATIONS AND HORIZONTAL CONTROL DIMENSIONS
5. REFER TO G-200 FOR ABBREVIATIONS LEGEND
6. REFER TO A-201 FOR DOOR TYPES AND SCHEDULE
7. MIRROR ALL PLAN DIMENSIONS NOT SHOWN OF GENERATOR FENCE, TYP
8. SEE SHEET G-100 FOR SYMBOLS SHOWN ON THIS PAGE

KEY NOTES:

1. 4" CONCRETE PAD – SEE 7/L-401
2. GENERATOR, ORIENT THE FUEL DELIVERY POINT TO BE CLOSER TO THE GATE– SEE ELECTRICAL
3. (E) PULLBOX – SEE ELECTRICAL
4. BOLLARDS – SEE LANDSCAPE
5. SEE LANDSCAPE DRAWINGS
6. SITE FENCE – SEE LANDSCAPE
7. CONC JOINTS – SEE LANDSCAPE
8. (E) CONDUIT FOR GENERATOR
9. ATS PAD – EXTEND EXISTING REINFORCED CONCRETE
10. PROTECT (E) TREES IN PLACE. MAINTAIN IRRIGATION AT ALL TIMES
11. EDGE OF CONCRETE SLAB

LEGEND:

FE — FIRE EXTINGUISHER CABINET – SURFACE MOUNTED, 4'-0" A.F.F.

RELOCATED EXISTING WATER-PROOF GFI RECEPTICLE – SEE ELECTRICAL

DOOR NUMBER	DOOR OPENING SIZE			DOOR			FRAME			DETAIL				HARDWARE SET	FIRE RATING	GLAZING	REMARKS
	WIDTH	HEIGHT	THICKNESS	MATERIAL	TYPE	FINISH	MATERIAL	TYPE	FINISH	HEAD	JAMB	THRESHOLD	DOOR ELEVATION				
200	-	-	-	-	-	-	-	-	-	-	-	3/A-204, SIM	-	01	-	-	EXISTING GATE, NEW GALV METAL SLEEVES TO CONC FOR CANE BOLT/DROP ROD
203	-	-	-	-	-	-	-	-	-	-	-	3/A-204, SIM	-	01	-	-	EXISTING GATE, NEW GALV METAL SLEEVES TO CONC FOR CANE BOLT/DROP ROD
204	7'-2 1/2" F.V.	8'-0"	PER DETAIL	GALV STEEL	PAIR	6/A-202	GALV STEEL	PAIR	6/A-202	1/A-204	8/A-204	3/A-204	6/A-204	02	NONE	NONE	DOOR FOLLOWS CURVE OF ELLIPTICAL PLAN

4'-0" 0 4'-0" 8'-0"
1/4"=1'-0"

REV.	DATE		BY	SUB.	APP.
	08.08.16	GENERATOR/LANDSCAPE MODIFICATION BID SET			

DESIGNED BY M.MAH
DRAWN BY E.GUERRERO
CHECKED BY M.WEISMANTEL
APPROVED BY R.JANIK
DATE 8.08.16

OmniTrans — Connecting Our Communities
Governments SANBAG Working Together — SAN BERNARDINO ASSOCIATED GOVERNMENTS
HDR
801 S. GRAND AVENUE
Suite 500
Los Angeles, Ca 90017-4633

SUBMITTED: _____ PROJECT MANAGER
APPROVED: _____

LICENSED ARCHITECT — ROBERT JANIK — No. 15225 — Exp. 12/31/17 — STATE OF CALIFORNIA

TRANSIT CENTER

GENERATOR YARD FLOOR PLAN, DOOR SCHEDULE

CONTRACT NO. IFB 16-1001520
DRAWING NO. A-101C
REVISION
SHEET NO. OF
SCALE 1/4" = 1'-0"

C:\pwworking\sac\d0689435\181207-A-1101C.dwg, Layout1, 8/26/2016 2:11:52 PM, EGUERRER

GENERAL NOTES:

1. ALL EXTERIOR WALL DIMENSIONS REFERENCE FACE OF FINISH OR CENTERLINE OF COLUMN UNLESS NOTED OTHERWISE.
2. ALL GRID DIMENSIONS REFERENCE CENTERLINE OF COLUMN UNLESS NOTED OTHERWISE
3. REFER TO ELEVATIONS A-201 FOR EQUIPMENT, SIGNAGE AND LIGHTING HEIGHT LOCATIONS.
4. REFER TO G-200 FOR ABBREVIATIONS LEGEND
5. MIRROR ALL PLAN DIMENSIONS NOT SHOWN OF GENERATOR FENCE, TYP
6. CUT AROUND WELDED WIRE MESH AS NECESSARY FOR ANY EQUIPMENT PENETRATIONS. USE MANUFACTURER HARDWARE AT CUT EDGES.

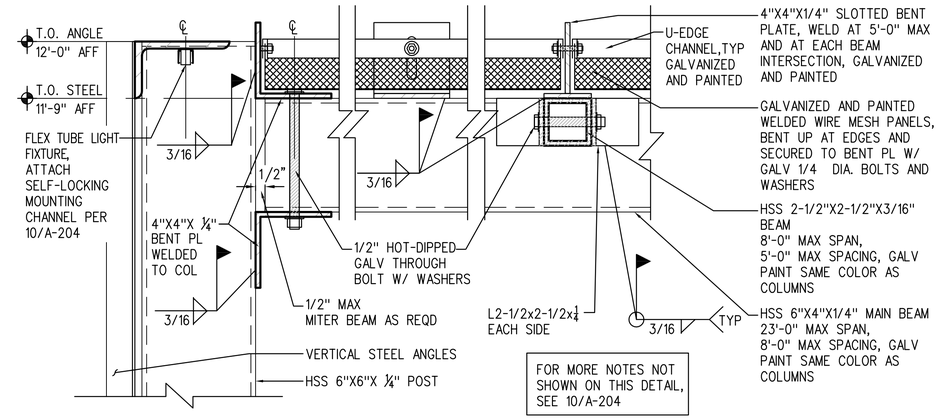

WELDED WIRE MESH ROOF DETAIL (2 / A-102C)

3" = 1'-0"

KEY NOTES:

1. WELDED WIRE MESH – GALVANIZED & PAINTED
2. HSS SUPPORTS FOR WIRE MESH ROOF

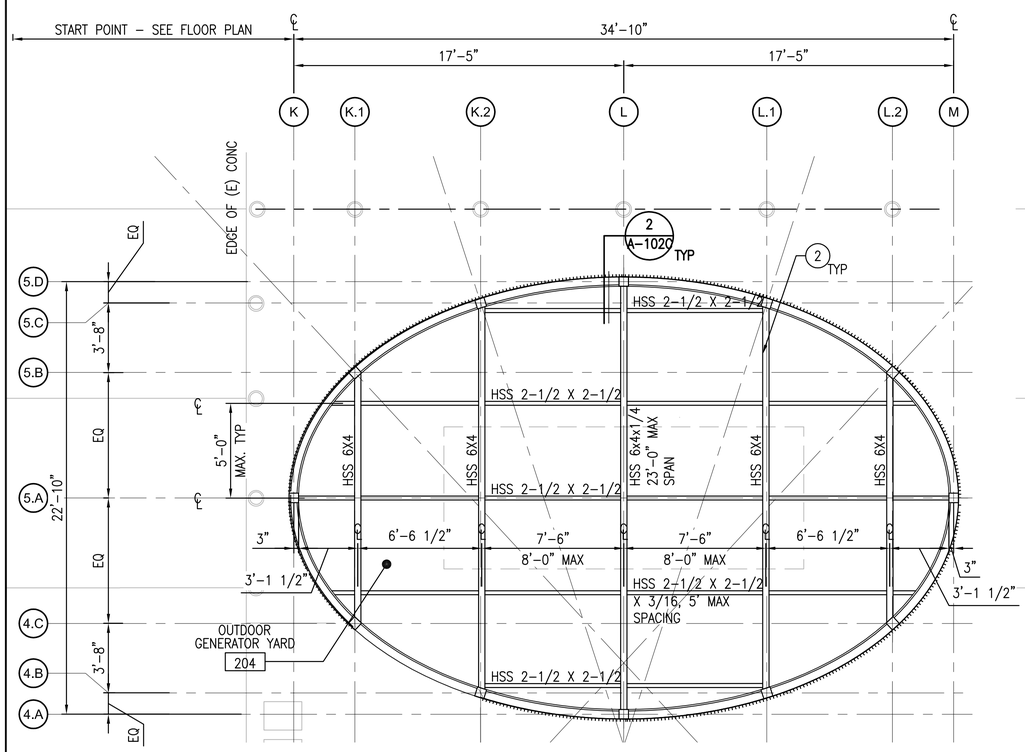

GENERATOR ROOF PLAN (STRUCTURAL) (3 / A-102C)

1/4"=1'-0"

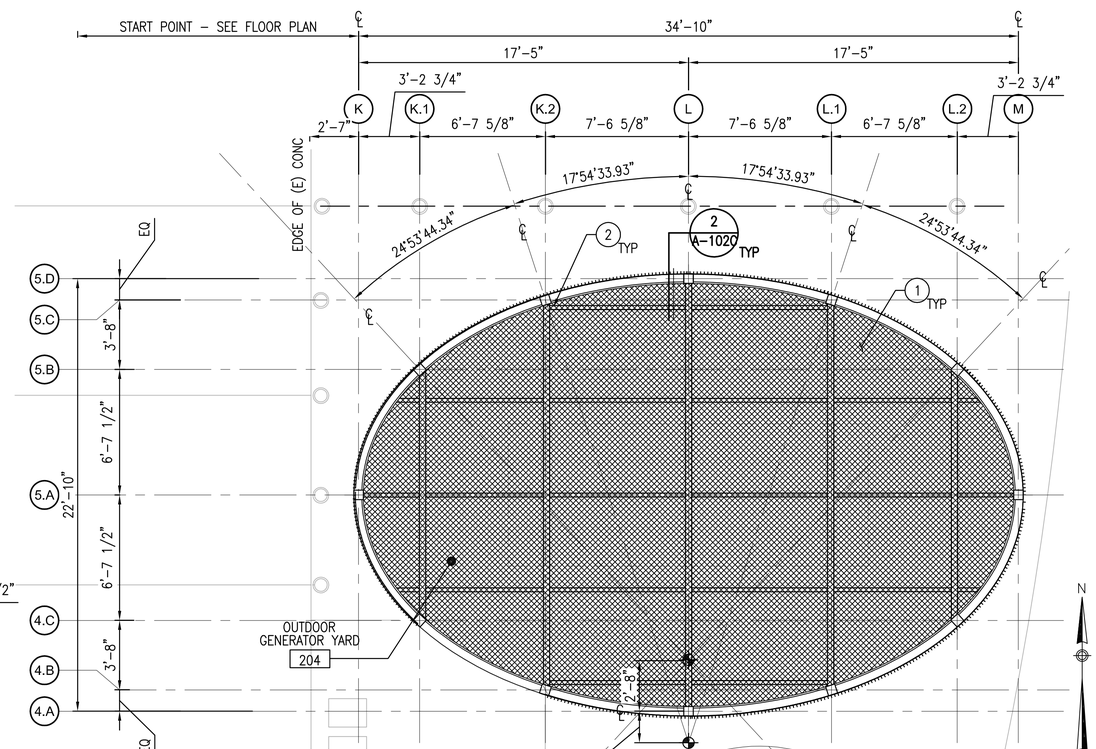

GENERATOR ROOF PLAN (1 / A-102C)

1/4"=1'-0"

REV.	DATE		BY	SUB.	APP.
	08.08.16	GENERATOR/LANDSCAPE MODIFICATION BID SET			

DESIGNED BY	M.MAH
DRAWN BY	E.GUERRERO
CHECKED BY	M.WEISMANTEL
APPROVED BY	R.JANIK
DATE	8.08.16

OmniTrans – Connecting Our Communities

Governments SANBAG Working Together – SAN BERNARDINO ASSOCIATED GOVERNMENTS

HDR
801 S. GRAND AVENUE
Suite 500
Los Angeles, Ca 90017-4633

SUBMITTED: _____ PROJECT MANAGER

APPROVED: _____

LICENSED ARCHITECT – ROBERT JANIK – No. 15225 – Exp. 10/31/17 – STATE OF CALIFORNIA

TRANSIT CENTER

GENERATOR YARD ROOF PLAN

CONTRACT NO.	IFB 16-1001520
DRAWING NO.	A-102C
REVISION	
SHEET NO.	OF
SCALE	1/4" = 1'-0"

C:\pwworking\sac\d0688433\18\207-A-1102C.dwg, Layout1, 8/26/2016 2:14:43 PM, EGUERRER

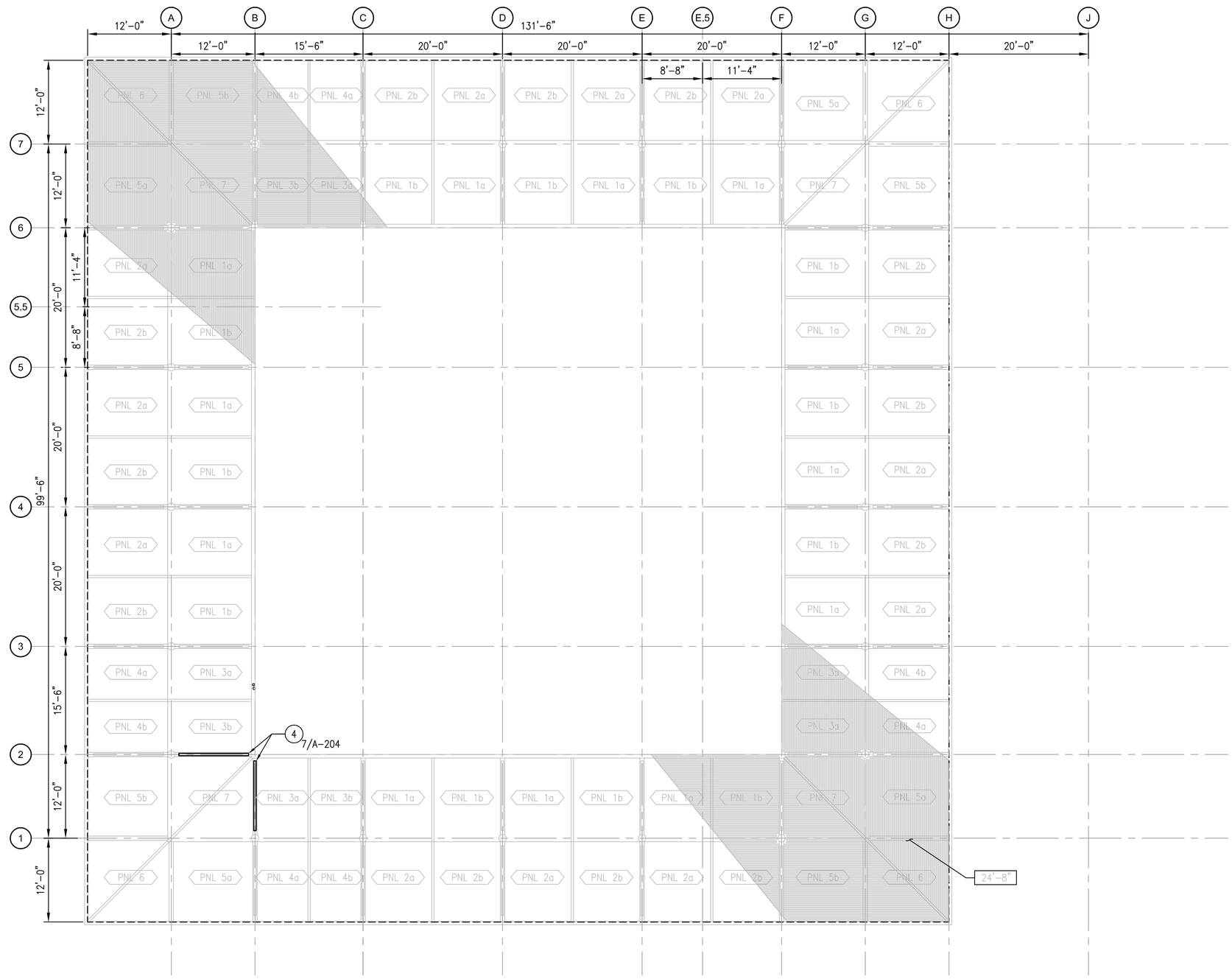

GENERAL NOTES:

1. REFER TO MECHANICAL, ELECTRICAL AND PLUMBING FOR PIPING AND CONDUITS IN EXPOSED CEILING AREAS. REFER TO STRUCTURAL FOR ALL EXPOSED STRUCTURAL ITEMS. ALL EXPOSED PIPING AND STRUCTURAL MEMBERS SHALL BE PAINTED WHITE COLOR, UNO
2. PLAN DIMENSIONS ARE TO FACE OF FINISH
3. SEE ELECTRICAL REFLECTED CEILING PLAN FOR FIXTURE LAYOUT
4. REFER TO SEGMENTED REFLECTED CEILING PLANS FOR DETAIL CALL OUTS AND DIMENSIONS NOT SHOWN IN ⅛" SCALE PLAN
5. REFER TO ENLARGED PLANS FOR ADDITIONAL INFORMATION NOT SHOWN IN SEGMENTED PLANS
6. FINISH FLOOR 0'-0" = 1033.35', REFER TO CIVIL
7. REFER TO SEGMENTED FLOOR PLANS FOR WALL LEGEND

KEY NOTES:

1 ACOUSTICAL CLOUD
2 CANOPY ABOVE
3 LINE OF BUILDING BELOW
4 LIGHT FIXTURE–SEE LEGEND BELOW
5 COLUMN OR BEAM – SEE STRUCTURAL
6 OVERHEAD COILING DOOR – FIRE RATED
7 MECHANICAL EQUIPMENT–SEE MECHANICAL
8 MOTORIZED SHADE
9 CEILING TV MOUNT, SEE 6/A-521 AND SECURITY

REFLECTED CEILING LEGEND:

EXP CEILING HEIGHT
ACOUSTICAL CEILING TILE
GYPSUM BOARD CEILING
EXPOSED CEILING
METAL PANEL CEILING
METAL TRELLIS CANOPY
SKYLIGHT
2X4 LED FIXTURE, SEE ELEC
LINEAR FIXTURE, SEE ELEC
WALL SCONCE, SEE ELEC
DOWNLIGHT FIXTURE, SEE ELEC
LED STRIP LIGHT OR UTILITY PENDANT FIXTURE, SEE ELEC
EXIT SIGN, SEE ELEC
ACCESS PANEL
RECESSED EXTERIOR LIGHT FIXTURE AT CANOPY, SEE ELEC
SUPPLY DIFFUSER, SEE MECHANICAL
RETURN DIFFUSER, SEE MECHANICAL
SPLIT VRF CASSETTE DIFFUSER, SEE MECHANICAL
EXHAUST DIFFUSER/TRANSFER GRILLE, SEE MECH
SPRINKLER HEAD
CAMERA
MS 1 ROLLER SHADE TYPE
PNL 1a BUILDING CANOPY PANEL TYPE
PUBLIC ADDRESS SPEAKER
WINDOW TYPE SYMBOL

N

CANOPY REFLECTED CEILING PLAN (1 / A-120)
1/8"=1'-0"

8'-0" 0 8'-0" 16'-0"
1/8"=1'-0"

REV.	DATE		BY / SUB.	APP.
	08.08.16	GENERATOR/LANDSCAPE MODIFICATION BID SET		

DESIGNED BY M.MAH
DRAWN BY E.GUERRERO
CHECKED BY M.WEISMANTEL
APPROVED BY R.JANIK
DATE 8.08.16

OmniTrans — Connecting Our Communities
Governments SANBAG Working Together
SAN BERNARDINO ASSOCIATED GOVERNMENTS
HDR
801 S. GRAND AVENUE
Suite 500
Los Angeles, Ca 90017-4633

SUBMITTED: _____ PROJECT MANAGER
APPROVED: _____

LICENSED ARCHITECT ROBERT JANIK No. 15225 Exp. 10/31/17 STATE OF CALIFORNIA

TRANSIT CENTER

BUILDING CANOPY REFLECTED CEILING PLAN

CONTRACT NO. IFB 16-1001520
DRAWING NO. A-120
REVISION
SHEET NO. OF
SCALE 1/8"=1'-0"

C:\pwworking\sac\d0689453\B1207A-A-1120.dwg, Layout1, 8/26/2016 2:17:08 PM, EGUERRER

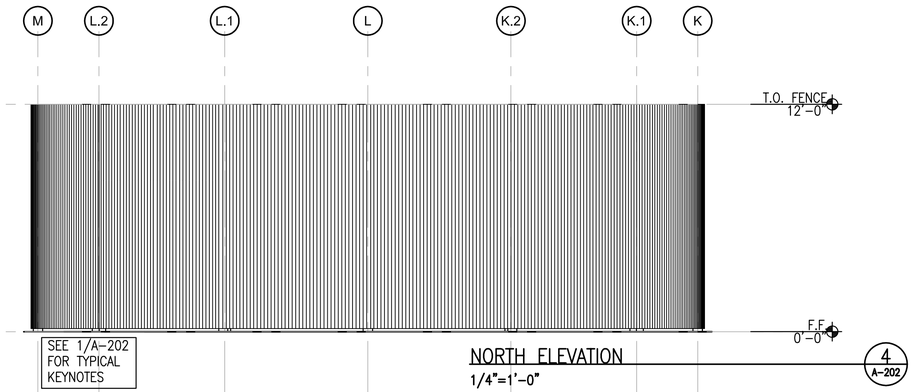

NORTH ELEVATION
1/4"=1'-0"
4 A-202

EAST ELEVATION
1/4"=1'-0"
1 A-202

SOUTH ELEVATION
1/4"=1'-0"
5 A-202

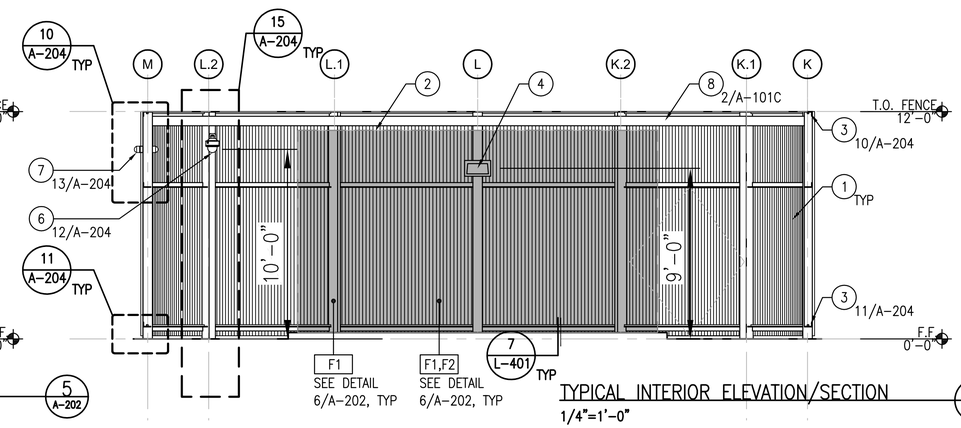

TYPICAL INTERIOR ELEVATION/SECTION
1/4"=1'-0"
2 A-202

GENERAL NOTES:

1. REFER TO ELECTRICAL SPECS AND DRAWINGS FOR EQUIPMENT AND LIGHT FIXTURES.
2. REFER TO CIVIL, FOR F.F. SPOT ELEVATION.
3. ALL EXPOSED STEEL SHALL BE GALVANIZED PRIOR TO PAINTING
4. REFER TO SHEET AG-100 FOR SIGNAGE PAINTS, FONTS, MATERIALS
5. REFER TO A-204 FOR FENCE DETAILS
6. REFER TO A-102C FOR GENERATOR YARD ROOF PLAN AND DETAILS
7. REFER TO DETAIL 6/A-202 FOR TYPICAL FENCE FINISH LOCATIONS
8. ALL PAINTED METAL SURFACES TO HAVE ANTI-GRAFFITI COATING, SEE SPECS

KEY NOTES:

1 GALVANIZED/PAINTED STEEL FENCE
2 GENERATOR SET ENCLOSURE, SEE ELECTRICAL
3 LED LIGHT FIXTURE, SEE ELECTRICAL
4 WALL PAK LIGHT FIXTURE, SEE ELECTRICAL
5 SIGNAGE, SEE AG SHEETS
6 SECURITY CAMERA – SEE TY-XXX SHEETS
7 OCCUPANCY SENSOR, SEE ELECTRICAL
8 HSS BEAM FOR WIRE MESH ROOF

FINISH LEGEND:

F1 PAINT (1) – FIELD APPLIED – SEMI-GLOSS FINISH SW 6233 SAMOVAR SILVER, RGB 185-190-191
F2 PAINT (2) – FIELD APPLIED – SEMI-GLOSS FINISH SW 6796 BLUE PLATE, RGB 22-117-172

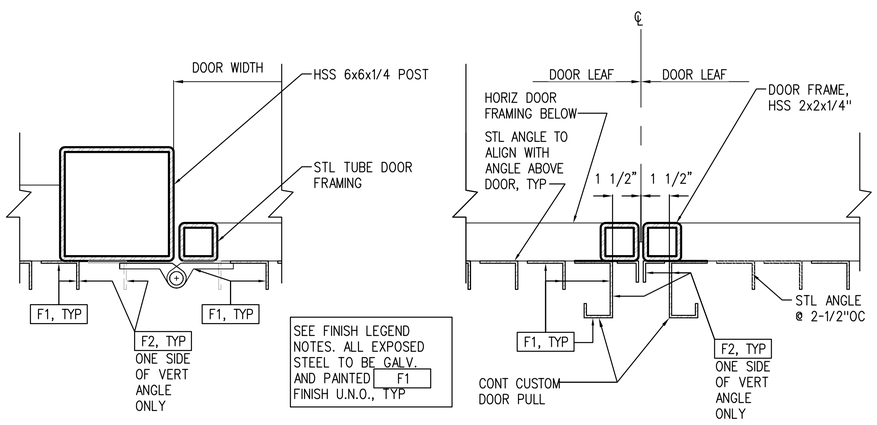

TYPICAL FENCE FINISH PLAN DETAIL
3" = 1'-0"
6 A-202

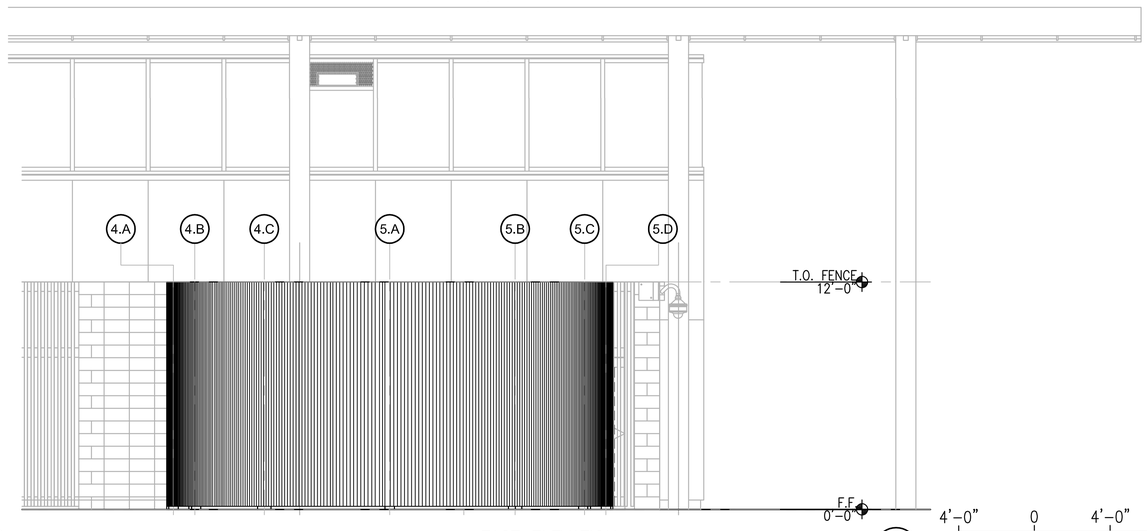

EAST ELEVATION
1/4"=1'-0"
3 A-202

4'-0" 0 4'-0" 8'-0"
1/4"=1'-0"

REV.	DATE		BY	SUB.	APP.
	08.08.16	GENERATOR/LANDSCAPE MODIFICATION BID SET			

DESIGNED BY M.MAH
DRAWN BY E.GUERRERO
CHECKED BY M.WEISMANTEL
APPROVED BY R.JANIK
DATE 8.08.16

OmniTrans Connecting the Community
Governments SANBAG Working Together
SAN BERNARDINO ASSOCIATED GOVERNMENTS

HDR
801 S. GRAND AVENUE
Suite 500
Los Angeles, Ca 90017-4633

SUBMITTED: _____ PROJECT MANAGER
APPROVED: _____

LICENSED ARCHITECT
ROBERT JANIK
No. 15225
Exp. 12/31/17
STATE OF CALIFORNIA

TRANSIT CENTER

GENERATOR YARD EXTERIOR ELEVATIONS

CONTRACT NO. IFB 16-1001520
DRAWING NO. A-202
REVISION
SHEET NO. OF
SCALE 1/8"=1'-0"

C:\pwworking\sanc\d0884331\R1207A-1202.dwg, Layout1, 8/26/2016 2:20:53 PM, EGUERRER

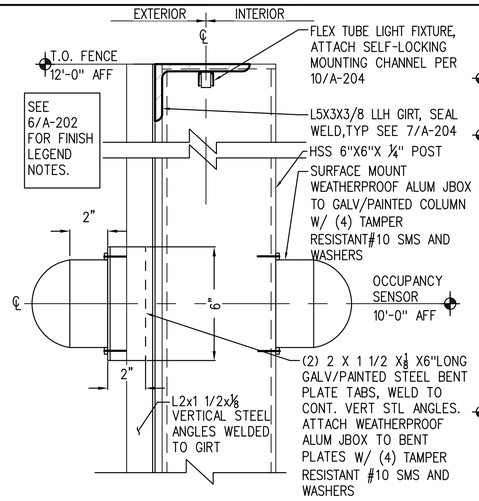

OCCUPANCY SENSOR MOUNTING DETAIL (13 / A-204)
3" = 1'-0"

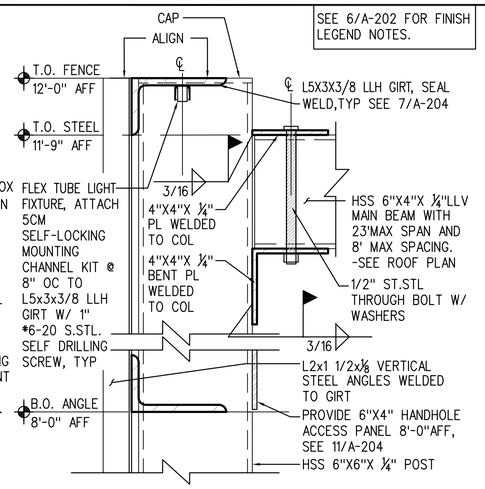

FENCE TOP SECTION DETAIL (10 / A-204)
3" = 1'-0"

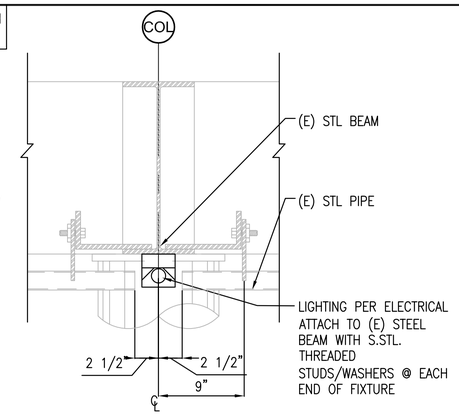

S8 LIGHT UNDER EXISTING BUILDING CANOPY DETAIL (7 / A-204)
1 1/2"=1'-0"

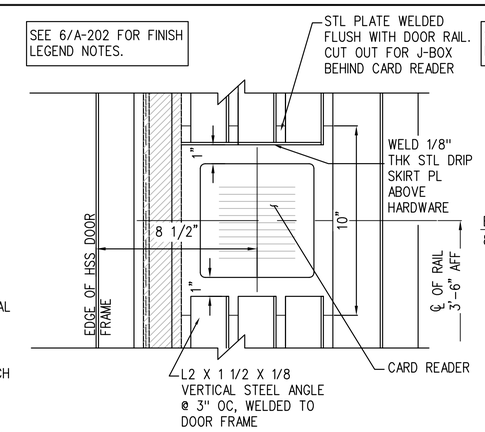

FENCE DOOR ELEVATION (4 / A-204)
3" = 1'-0"

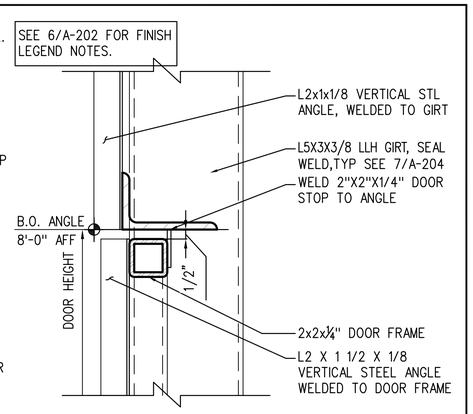

FENCE DOOR HEAD DETAIL (1 / A-204)
3" = 1'-0"

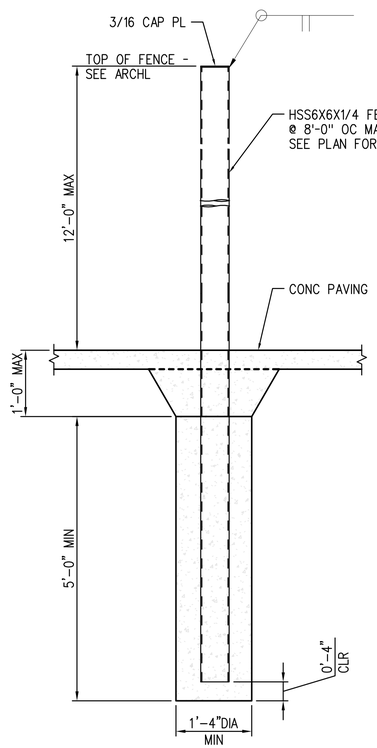

TYP FENCE POST FOOTING (15 / A-204)
3/4"=1'-0"

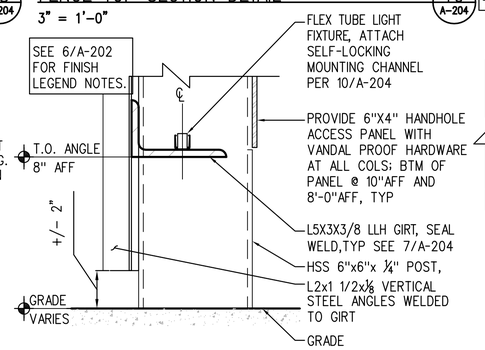

FENCE TOP SECTION DETAIL (10 / A-204)
3" = 1'-0"

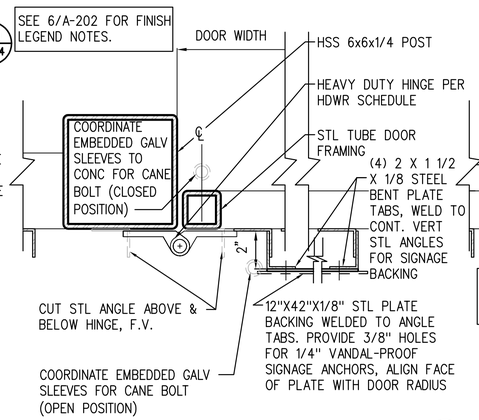

FENCE DOOR JAMB/ SIGN DETAIL (8 / A-204)
3" = 1'-0"

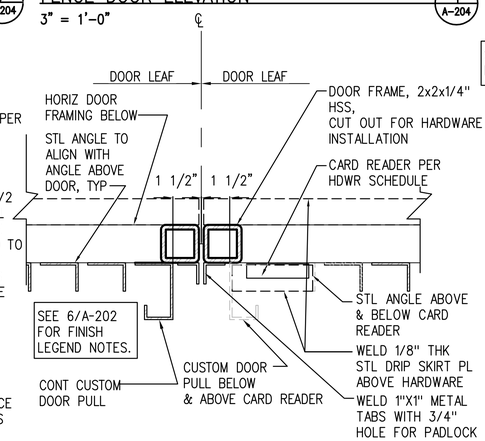

FENCE DOOR DETAIL (5 / A-204)
3" = 1'-0"

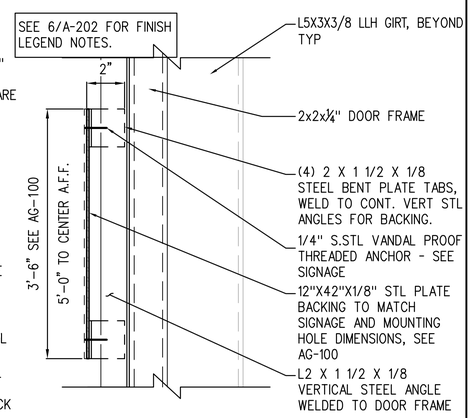

FENCE DOOR SIGN ANCHORAGE DETAIL (2 / A-204)
NTS

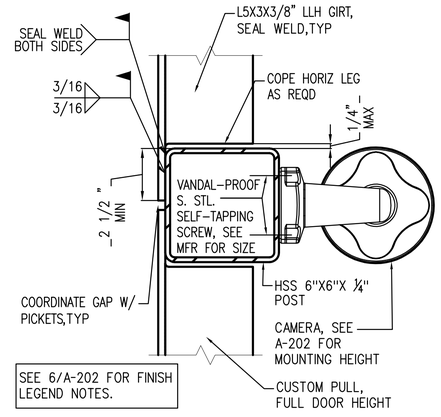

FENCE BASE SECTION DETAIL (11 / A-204)
3" = 1'-0"

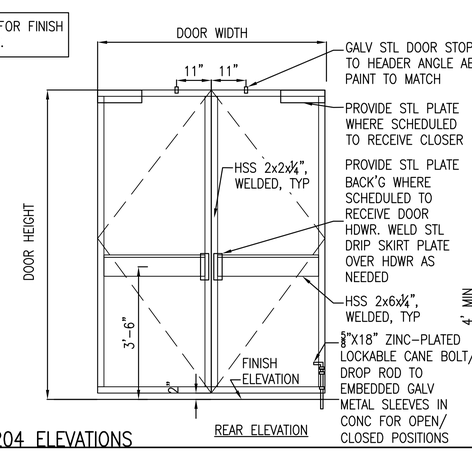

DOOR #204 ELEVATIONS
1/2"=1'-0"

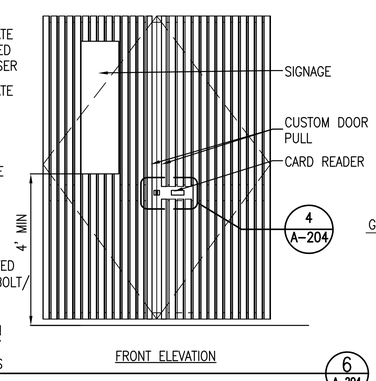

(6 / A-204)

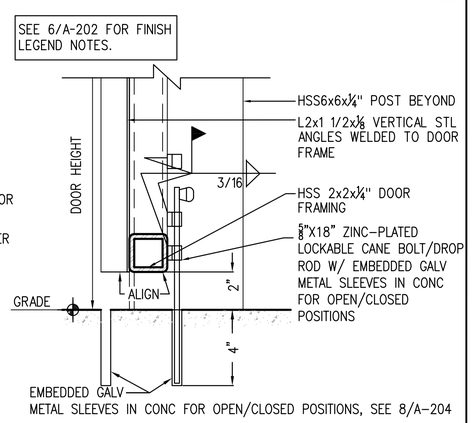

FENCE DOOR SILL (3 / A-204)
3" = 1'-0"

FENCE POST PLAN (12 / A-204)
3" = 1'-0"

REV.	DATE		BY / SUB.	APP.
	08.08.16	GENERATOR/LANDSCAPE MODIFICATION BID SET		

DESIGNED BY M.MAH
DRAWN BY E.GUERRERO
CHECKED BY M.WEISMANTEL
APPROVED BY R.JANIK
DATE 8.08.16

OmniTrans — Connecting Our Community
Governments SANBAG Working Together — SAN BERNARDINO ASSOCIATED GOVERNMENTS
HDR — 801 S. GRAND AVENUE, Suite 500, Los Angeles, Ca 90017-4633

SUBMITTED: _____ PROJECT MANAGER
APPROVED: _____

LICENSED ARCHITECT — ROBERT JANIK — No. 15225 — Exp. 10-31-17 — STATE OF CALIFORNIA

TRANSIT CENTER

GENERATOR FENCE DETAILS

CONTRACT NO. IFB 16-1001520
DRAWING NO. A-204
REVISION
SHEET NO. OF
SCALE AS NOTED

C:\pwworking\sac\d0589433\81207-A-1204.dwg, Layout1, 8/26/2016 2:23:26 PM, EGUERRER

LIGHTING

(REFER TO LIGHTING FIXTURE SCHEDULE ON DWG E-600)

- DOWNLIGHT CEILING MOUNTED
- INGRADE UPLIGHT
- DOWNLIGHT WALL MOUNTED
- L1 — 2 X 4 LED CEILING MOUNTED FIXTURE (MARK "L1" INDICATES FIXTURE TYPE)
- LIGHT FIXTURE FURNISHED WITH INTEGRAL EMERGENCY BATTERY UNIT
- FLUORESCENT WALL BRACKET LIGHT OUTLET
- FLUORESCENT INDUSTRIAL STRIP LIGHT FIXTURE
- LED STRIP LIGHTS
- LIGHTING FIXTURE, POLE MOUNTED
- INGRADE LED LIGHTING FIXTURE
- EXIT LIGHT FIXTURE, CEILING OR WALL MOUNTED, DIRECTIONAL ARROW(S) AS INDICATED
- MS — MOTION SENSOR
- $ab — SINGLE POLE TOGGLE SWITCH, MOUNT +46" UON. "ab" INDICATES SWITCH LEG "a" AND "b"
- $TE — MANUAL STARTER WITH THERMAL OVERLOAD PROTECTION AND CONTROL RELAY MOUNT ADJACENT TO EQUIPMENT UON.
  - 3 — THREE WAY
  - 4 — FOUR WAY
  - TE — THERMAL ELEMENT FOR FRACTIONAL HORSEPOWER MOTOR
  - K — KEY OPERATED
- DUAL TECHNOLOGY WALL MOUNTED OCCUPANCY SENSOR WITH OVERRIDE SWITCH, MOUNT AT +48"AFF
- DUAL TECHNOLOGY CEILING MOUNTED OCCUPANCY SENSOR WITH OVERRIDE SWITCH
- DAYLIGHT HARVESTING CEILING MOUNTED

RACEWAYS

- 3/4"-2#12 & 1#12 GND.
- 1"-4#12 & 1#12 GND.
- #10 — WIRE SIZE AS NOTED
- CONDUIT AND WIRE RUN CONCEALED IN WALL OR CEILING SPACE, OR RUN EXPOSED IN UNFINISHED SPACE.
- CONDUIT AND WIRE RUN CONCEALED IN SLAB, UNDER SLAB OR UNDERGROUND
- LA-5,7 — CONDUIT AND WIRE HOMERUN, CONTINUOUS RUN TO PANELBOARD, SERVICE PEDESTAL OR EQUIPMENT CABINET. INDICATES HOMERUN TO PANEL "LA", CIRCUIT #5,7
- CONDUIT TURNED UP
- CONDUIT TURNED DOWN
- CONDUIT STUB-OUT, SIZE AS NOTED.

CONVENTIONS

- (1) — REFERENCE NOTES
- (10Y) — CABLE AND/OR RACEWAY TAG: SEE FEEDER SCHEDULE ON DWG E-601

DETAIL REFERENCE:

- (A / E7.1) — DETAIL DESIGNATION; SHEET NUMBER REFERENCE

LIGHTING FIXTURE IDENTIFICATION TAG:

POWER

- MAIN SWITCHBOARD, DISTRIBUTION BOARD OR MOTOR CONTROL CENTER
- PANELBOARD, 480/277V, SURFACE OR FLUSH MOUNTED
- PANELBOARD, 208/120V, SURFACE OR FLUSH MOUNTED
- ELECTRICAL MOTOR CONNECTION
- (J) — JUNCTION BOX, RECESSED WALL MOUNTED, +18" UON.
- DUPLEX CONVENIENCE RECEPTACLE OUTLET, MOUNT +18" UON.
- DOUBLE DUPLEX CONVENIENCE RECEPTACLE OUTLET, MOUNT +18" UON.
- DUPLEX CONVENIENCE RECEPTACLE OUTLET,FLUSH FLOOR MOUNTED.
- COMBINATION POWER/COMMUNICATIONS FLOOR BOX, SEE COMMUNICATIONS PLAN FOR SYSTEMS DEVICE
- SAFETY DISCONNECT SWITCH, 3 POLE UON
- COMBINATION TV CABLE/DUPLEX RECEPTACLE MOUNT AT +84" AFF., U.O.N
- (J) — JUNCTION BOX MOUNTED ABOVE CEILING
- (C) — CONDULET

SINGLE LINE

- GF — GROUND FAULT SENSOR AND RELAY
- 400AF 300AT — CIRCUIT BREAKER, TRIP SIZE AS INDICATED. 3 POLE UNLESS OTHERWISE NOTED. A.I.C. AS INDICATED.
- 30A — CONTRACTOR, SIZE AS SHOWN
- (M) — METER
- TRANSFORMER, KVA RATING AS SHOWN ON DRAWING
- T — TRANSFORMER
- GROUND CONNECTION

ABBREVIATIONS:

A, AMP	AMPERE
AC	ALTERNATING CURRENT
AFF	ABOVE FINISHED FLOOR
AIC	AMPERES INTERRUPTING CAPACITY
AT	AMPERE TRIP
BKR	BREAKER
C	CONDUIT
CKT	CIRCUIT
C/O	CONDUIT ONLY
COMM	COMMUNICATIONS
COND	CONDUCTOR
CT	CURRENT TRANSFORMER
CU	COPPER
DC	DIRECT CURRENT
DISC	DISCONNECT
DP	DISTRIBUTION PANEL
DWG	DRAWING
(E)	EXISTING
EMT	ELECTRICAL METALLIC TUBING
FACP	FIRE ALARM CONTROL PANEL
FDR	FEEDER
GFP,GFI	GROUND FAULT PROTECTION
GND	GROUND, GROUNDING
HP	HORSEPOWER
KV	KILOVOLT
KVA	KILOVOLT AMPERE
KW	KILOWATT
LTG	LIGHTING
LV	LOW VOLTAGE
MTD	MOUNTED
MTG	MOUNTING
(N)	NEW
NF	NON FUSED
NTS	NOT TO SCALE
P	POLE
PA	PUBLIC ADDRESS
PNL	PANEL
PH	PHASE
PWR	POWER
PVC	POLYVINYL CHLORIDE CONDUIT
SCRRA	SOUTHERN CALIFORNIA REGIONAL RAIL AUTHORITY
SW	SWITCH
SWBD	SWITCHBOARD
SWGR	SWITCHGEAR
TEL	TELEPHONE
TYP	TYPICAL
UG	UNDERGROUND
UON	UNLESS OTHERWISE NOTED
V	VOLT
VM	VOLT METER
VS	VOLTIMETER SWITCH
W	WATT, WIRE
WP	WEATHERPROOF
XFMR	TRANSFORMER

APPLICABLE CODES:

2009 IBC AND 2010 CALIFORNIA AMENDMENTS
(2010 CALIFORNIA BUILDING CODE, PART 2, TITLE 24, CCR)

2008 NEC AND 2010 CALIFORNIA AMENDMENTS
(2010 CALIFORNIA ELECTRICAL CODE – PART 3, TITLE 24, CCR)

2009 UMC AND 2010 CALIFORNIA AMENDMENTS
(2010 CALIFORNIA MECHANICAL CODE – PART 4, TITLE 24, CCR)

2009 UPC AND 2010 CALIFORNIA AMENDMENTS
(2010 CALIFORNIA PLUMBING CODE – PART 5, TITLE 24, CCR)

2006 IFC AND 2010 CALIFORNIA AMENDMENTS
(2010 CALIFORNIA FIRE CODE – PART 9, TITLE 24, CCR)

GENERAL NOTES:

1. ALL WORK SHALL CONFORM TO THE REQUIREMENTS OF SCRRA AND AMTRAK SPECIFICATIONS, STANDARD DRAWINGS, DESIGN CRITERIA AND GUIDELINES.
2. THE DRAWINGS INDICATE IN DIAGRAMMATIC FORM THE DESIRED ARRANGEMENT OF PRINCIPLE SYSTEMS AND EQUIPMENT, CONDUIT, ETC., AND SHALL BE FOLLOWED AS CLOSE AS POSSIBLE. SCALED AND FIGURED DIMENSIONS ARE APPROXIMATE AND ARE GIVEN FOR ESTIMATE PURPOSE ONLY. BEFORE PROCEEDING WITH WORK, VERIFY EXISTING CONDITIONS, DIMENSIONS, SIZES AND ASSUME FULL RESPONSIBILITY FOR FITTING–IN OF EQUIPMENT AND MATERIALS, INCLUDING OFFSETS, BENDS, ETC., WHICH MAY BE REQUIRED.
3. CUT STEEL CONDUIT ENDS SQUARE, REAM SMOOTH. PAINT MALE THREADS OF FIELD THREADED CONDUIT WITH GRAPHITE BASE PIPE COMPOUNDS DRAW UP TIGHT WITH CONDUIT COUPLINGS.
4. LEAVE WIRE SUFFICIENTLY LONG TO PERMIT MAKING FINAL CONNECTIONS.
5. COVERS OF JUNCTION AND PULL BOXES SHALL BE ACCESSIBLE.
6. PROVIDE PULL BOXES AND MANHOLES AS INDICATED AND WHENEVER NECESSARY TO FACILITATE CABLE PULL. COORDINATE EXACT LOCATIONS WITH OTHER TRADES.
7. FOR EMPTY RACEWAY RUNS, PROVIDE PULL BOXES EVERY 100 FEET AND AS INDICATED. COORDINATE EXACT LOCATIONS WITH OTHER TRADES.
8. SUPPORT PANEL, JUNCTION AND PULL BOXES INDEPENDENTLY FROM STRUCTURE WITH NO WEIGHT BEARING ON CONDUITS.
9. SUPPLEMENTARY JUNCTION AND PULL BOXES IN ADDITIONAL TO THE INDICATED ON THE CONTRACT DRAWINGS AND AS REQUIRED BY APPLICABLE CODES. PROVIDE AND INSTALL SUPPLEMENTARY JUNCTION AND PULL BOXES AS FOLLOWS:
   a. WHEN REQUIRED TO FACILITATE INSTALLATION OF WIRING.
   b. AT EVERY THIRD 90 DEGREE TURN.
   c. AT INTERVALS NOT EXCEEDING 100 FEET FOR RACEWAY SIZES OVER 1 INCH.
10. ALL RECEPTACLES INDICATED "GFI" SHALL BE GROUND FAULT INTERRUPTER TYPE.
11. ALL ELECTRICAL UNDERGROUND CONDUITS SHALL BE 1" MINIMUM.
12. CONTRACTOR SHALL FURNISH ALL MATERIAL, LABOR, EQUIPMENT, PERMITS, FEES AND OTHER EXPENSES REQUIRED FOR THE EXECUTION OF THE WORK SHOWN ON THE CONSTRUCTION DRAWINGS.
13. WORK SHALL BE IN ACCORDANCE WITH LATEST APPLICABLE CODES AND SHALL COMPLY WITH REQUIREMENTS OF ALL AUTHORITIES HAVING JURISDICTION.
14. CONTRACTOR SHALL BE RESPONSIBLE FOR ALL CUTTING, TRENCHING, BACKFILLING AND PATCHING REQUIRED TO COMPLETE THE WORK. ALL EXPOSED FINISHED AREAS THAT ARE DAMAGED AS A RESULT OF THIS WORK SHALL BE REPAIRED TO MATCH THE EXISTING CONDITIONS AT NO ADDITIONAL COST TO THE CUSTOMER.
15. BEFORE SUBMITTING BIDS FOR THE WORK, CONTRACTOR SHALL MAKE A THOROUGH FIELD INSPECTION OF THE PROJECT AREA TO DETERMINE ANY EXISTING CONDITIONS THAT MAY AFFECT THE WORK.
16. PROVIDE EQUIPMENT GROUND CONDUCTOR IN ALL BRANCH CIRCUIT RACEWAYS AND FEEDERS.
17. REFER TO EC-001 FOR COMMUNICATION SYMBOLS AND GENERAL NOTES:
18. FIRE ALARM CONTROL PANEL (FACP), FIRE ALARM ANNUNCIATOR (FAA), AND THEIR RESPECTIVE APPURTENANCES AS SHALL BE BIDDER DESIGNED AND INSTALLED.
19. PAINT EXPOSED CONDUIT WITH THE SAME COLOR OF THE SURFACE WHERE THE CONDUIT IS BEING ROUTED.

SHEET INDEX

E-001	SYMBOL LIST, ABBREVIATIONS AND GENERAL NOTES
E-002	TITLE 24 CALCULATIONS
E-003	TITLE 24 CALCULATIONS
ES-101	ELECTRICAL SITE PLAN
ES-102	PARKING LOT LIGHTING REMODEL FOR 655 RIALTO AVENUE
ES-103	TEMPORARY PARKING LOT LIGHTING FOR 655 RIALTO AVENUE
EL-101	LIGHTING FLOOR PLAN
EP-101A	POWER FLOOR PLAN – AREA "A"
EP-101B	POWER FLOOR PLAN – AREA "B"
EP-101C	POWER FLOOR PLAN – AREA "C"
EP-102	ROOF POWER PLAN
EC-001	COMMUNICATION SYMBOL LIST AND GENERAL NOTES
EC-101	SIGNAL AND COMMUNICATION FLOOR PLAN
E-500	ELECTRICAL DETAILS
E-501	ELECTRICAL DETAILS
E-502	COMMUNICATION DETAILS
E-503	COMMUNICATION DETAILS
E-600	LIGHTING FIXTURE SCHEDULE
E-600A	LIGHTING FIXTURE SCHEDULE
E-601	SINGLE LINE DIAGRAM
E-701	PANEL SCHEDULES
E-702	PANEL SCHEDULES
E-801	PHOTOMETRIC PLAN FOR SBTC SITE

LIGHTING FIXTURE SCHEDULE GENERAL NOTES:

(REFER TO DWG. E-600 AND E-600A FOR LIGHTING FIXTURE SCHEDULE)

1. FOR EXACT LOCATION OF INTERIOR LIGHT FIXTURES, REFER TO ARCHITECTURAL REFLECTED CEILING PLANS AND FOR EXTERIOR LIGHTING FIXTURES REFER TO LANDSCAPE DRAWINGS.
2. PROVIDE LIGHT FIXTURE ALL NECESSARY ACCESSORIES AND COMPONENTS REQUIRED SUCH AS BUT NOT LIMITED TO MOUNTING HARDWARE, LOUVERS AND LENSES.
3. CONFIRM FIXTURE FINISH COLOR/SELECTIONS WITH ARCHITECT PRIOR TO ORDERING LIGHTING FIXTURES.
4. LED LIGHT FIXTURES CONTROLLED BY DAYLIGHT HARVESTING DEVICE SHALL HAVE 0–10VDV DIMMER MODULE.
5. PROVIDE LED LIGHT FIXTURE WITH LED RATED AT 3500'K TEMPERATURE.
6. PROVIDE FIXTURE WITH ELECTRONIC BALLAST
7. ALL LIGHTING FIXTURES WITH INTEGRAL BATTERY UNIT SHALL OPERATE FOR 1 1/2 HOUR MINIMUM AND MAINTAIN NOT LESS THAN 87 1/2% OF THE NOMINAL BATTERY V
8. PROVIDE OUTDOOR LIGHT FIXTURES WITH LIGHT CUT–OFF AS REQUIRED TO MEET LEED OUTDOOR REQUIREMENTS.

LIGHTING FIXTURE SCHEDULE REFERENCE NOTES:

(REFER TO DWG. E-600 FOR LIGHTING FIXTURE SCHEDULE)

1. COORDINATE PREFERRED LIGHTING FIXTURE FINISHED WITH ARCHITECT.
2. MOUNT FIXTURE IN CEILING CLOUD, PROVIDE ADEQUATE SUPPORT AND SEISMIC BRACING. COORDINATE WITH ARCHITECT FOR INSTALLATION.
3. PROVIDE REQUIRED LENGTH, VERIFY EXACT LENGTH IN THE FIELD.
4. MOUNT FIXTURE IN BETWEEN THE CEILING CLOUDS WITH THE SAME MOUNTING HEIGHT.

REV.	DATE		BY / SUB.	APP.
	08.08.16	GENERATOR/LANDSCAPE MODIFICATION BID SET		

DESIGNED BY A. NICHOLS
DRAWN BY W STEBOK
CHECKED BY R. GENATO
APPROVED BY R.JANIK
DATE 08.08.16

OmniTrans — Connecting Our Communities
Governments SANBAG Working Together
SAN BERNARDINO ASSOCIATED GOVERNMENTS

HDR
2280 Market Street
Suite 100
Riverside, Ca 92501-2110

SUBMITTED: _____ PROJECT MANAGER
APPROVED: _____

REGISTERED PROFESSIONAL ENGINEER — RAYMOND I. GENATO — No. E17995 — Exp. 12-31-16 — ELECTRICAL — STATE OF CALIFORNIA

TRANSIT CENTER

SYMBOL LIST, ABBREVIATIONS AND GENERAL NOTES

CONTRACT NO. IFB 16-1001520
DRAWING NO. E-001
REVISION
SHEET NO. OF
SCALE NONE

C:\pwworking\sac\d0889\D2818\207-E-0001.dwg, E-001, 8/26/2016 2:28:34 PM, EGUERRER

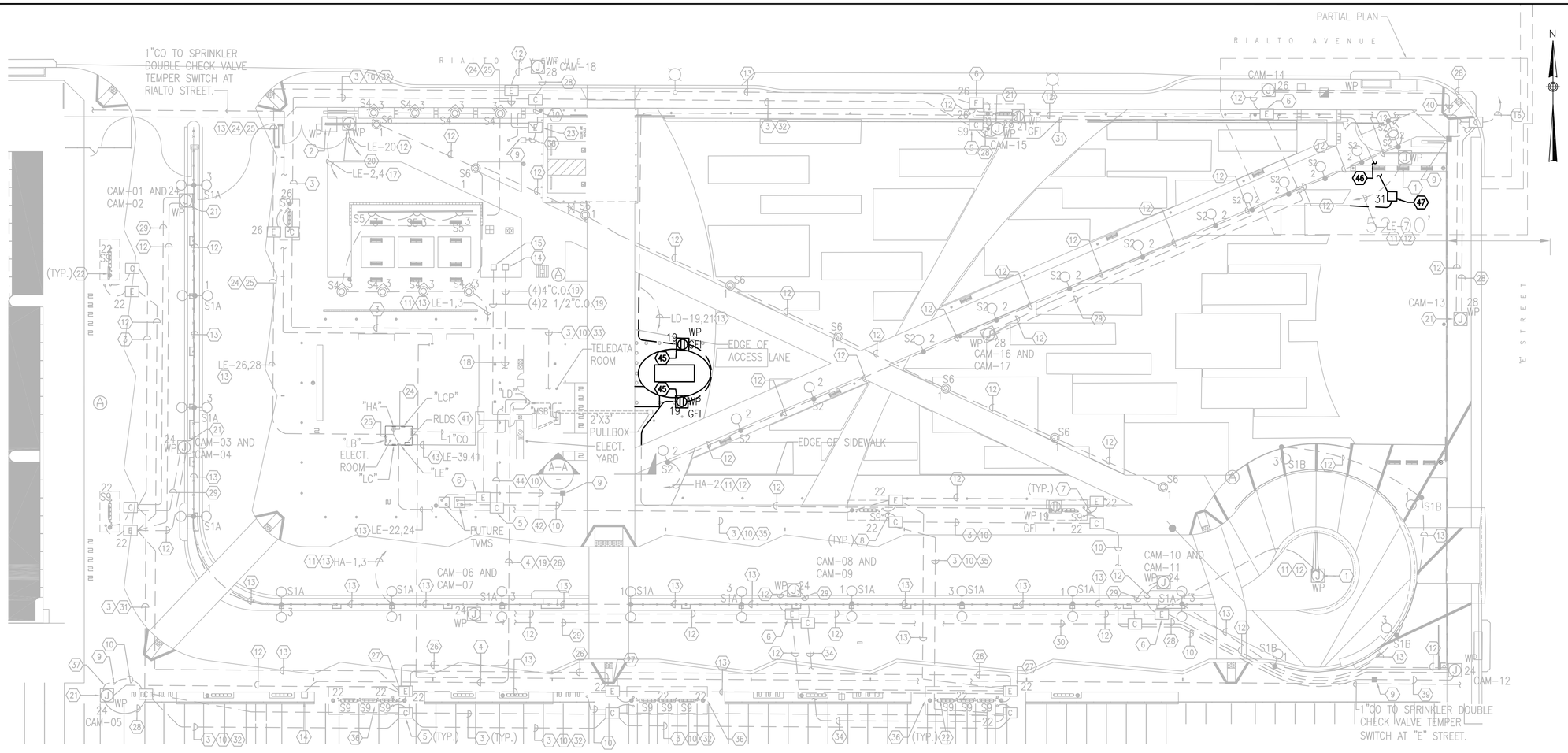

GENERAL NOTES:

1. ALL UNDERGROUND CONDUIT SHALL BE 1"C. MIN, UON.
2. CONDUCTOR SHALL BE #10 AWG MINIMUM, UON. FOR ALL PULL BOXES AND HANDHOLE LOCATION COORDINATE WITH LANDSCAPE AND ARCHITECTURAL DRAWINGS.
3. CAP AND PROTECT STUB-UPS

REFERENCE NOTES:

(1) FOR MONUMENT LIGHTING. COORDINATE MONUMENT PROVIDE EXACT LOCATION OF J-BOX.

(2) 60AS,208V,1P DISCONNECT SWITCH FOR FOUNTAIN POWER SUPPLY. PROVIDE UNISTRUT SUPPORT AS REQUIRED.

(3) (2) 2"C. WITH COMM. CABLING FOR BUS CANOPY SIGNAGE.

(4) (4) 2"CO WITH 3/8" NYLON PULLROPE FOR SECURITY SYSTEM INTERCONNECTION WITH CREW HOUSE PROJECT. ROUTE CONDUIT TO TELE/DATA ROOM 201. SEE SHEET EP-101C.

(5) PROVIDE 11" X 17" COMM. HANDHOLE, DEPTH AS REQUIRED.

(6) PROVIDE 11" X 17" ELEC. HANDHOLE, DEPTH AS REQUIRED.

(7) PROVIDE 1"C. WITH 2 #8 + 1 #8 GND. TO LED SIGNAGE AND LIGHTING IN THE CANOPY. (TYP)

(8) PROVIDE 1"C. FOR COMM. TO SECURITY CAMERAS.

(9) EMERGENCY PHONE IN THE KIOSK, SEE LANDSCAPE DRAWINGS FOR EXACT LOCATION OF KIOSK.

(10) PROVIDE 1"C. FOR COMM. TO EMERGENCY PHONE.

(11) ROUTE CIRCUIT VIA LIGHTING CONTROL PANEL "LCP"

(12) 1"C-2 #8 &1 #8 GND.

(13) 2"C-4 #8 &1 #8 GND.

(14) 24" X 36" (DEPTH AS REQUIRED) UNDERGROUND TELECOM PULL BOX FOR FUTURE BUILDING. COORDINATE WITH LANDSCAPE FOR EXACT LOCATION.

(15) 24" X 36" (DEPTH AS REQUIRED) UNDERGROUND POWER PULL BOX FOR FUTURE BUILDING. COORDINATE WITH LANDSCAPE FOR EXACT LOCATION.

(16) 1"C. FOR COMM. TO EMERGENCY PHONE. TERMINAL CONDUIT IN TELECOM ROOM.

(17) 1"C-2 #6 & 1 #6 GND.

(18) FOR CONTINUATION, REFER TO DWG EC-101.

(19) ROUTE CONDUIT VIA UNDERGROUND DUCTBANK, SEE TYPICAL DUCTBANK DETAIL ON E-500.

(20) FOR FOUNTAIN LIGHTING, COORDINATE EXACT LOCATION WITH LANDSCAPE.

(21) FOR POLE MOUNTED SECURITY CAMERA POWER SUPPLY. COORDINATE EXACT LOCATION OF SECURITY CAMERA WITH SYSTEM PROVIDER.

(22) LIGHT FIXTURE MOUNTED ON THE CANOPY STRUCTURE. REFER TO ARCHITECTURAL DETAIL 8/AS-120

(23) PROVIDE 17"LX11"X12"D PULLBOX WITH ELECTRICAL LOGO FOR FUTURE ELECTRICAL VEHICLE CHARGING STATION.

(24) 2"CO-(3/8" NYLON PULLROPE) TO PANEL 'HA'

(25) 1"CO-(3/8" NYLON PULLROPE) TO PANEL 'LB'

(26) (4) 2"CO WITH 3/8" NYLON PULLROPE

(27) 24"W X 36"L X 24"D PULLBOX

(28) 1"C – 1 CAT 6 CABLE

(29) 1"C – 2 CAT 6 CABLES

(30) 1"C – 3 CAT 6 CABLES

(31) 1"C – 4 CAT 6 CABLES

(32) 1"C – 5 CAT 6 CABLES

(33) 1"C – 6 CAT 6 CABLES

(34) 1"C – 7 CAT 6 CABLES

(35) 2"C – 12 CAT 6 CABLES

(36) SHARED SBTC/DSBPRP CANOPY-POWER FROM DSBPRP, SEE DSBPRP ELECTRICAL

(37) ROUTE 3/4"C-2 #12, 1 #12 GND. THROUGH CAM-05 TO PANEL "LB", CIRCUIT 41.

(38) ROUTE 3/4" C-2 #12, 1 #12 GND. THROUGH ELECTRICAL PULLBOXS TO PANEL LB, CIRCUIT 41.

(39) ROUTE 3/4"C-2 #12, 1 #12 GND. FOR POWER TO EMERGENCY PHONE IN KIOSK THROUGH CAM-12 FROM PANEL "LB", CIRCUIT 41.

(40) ROUTE 3/4"C-2 #12, 1 #12 GND. FOR POWER TO EMERGENCY PHONE IN KIOSK THROUGH CAM-14 FROM PANEL "LB", CIRCUIT 41.

(41) PROVIDE 1"C – 2 #12, 1 #12 GND FROM RLDS TO PANEL – "LE", CIRCUIT 30.

(42) CONTRACTOR TO INSTALL 3/4" C-2 #12, 1 #12 GND. THROUGH ELECTRICAL PULLBOX TO PANEL LE, CIRCUIT 32.

(43) ROUTE 1"CO – 3/8" NYLON PULLROPE FROM PANEL "LE" TO FUTURE ELECTRICAL PULLBOX.

(44) ROUTE 1-1/2"CO – 3/8" NYLON PULLROPE FROM CONDUIT STUB-UP IN TELE/DATA ROOM 201 TO FUTURE COMMUNICATION PULLBOX.

(45) RELOCATE EXISTING WATER-PROOF GFI RECEPTACLE TO PLANTER AREA AS SHOWN

(46) DEMO EXISTING WATER-PROOF GFI RECEPTACLE, INTERCEPT AND EXTEND 1" CONDUIT TO NEW IRRIGATION CONTROLLER AT PLANTER AREA – SEE LANDSCAPE

(47) NEW IRRIGATION CONTROLLER. CONTRACTOR TO ROUTE 2 #12, 1 #12 GND TO PANEL LD CIRCUIT 31.

ELECTRICAL SITE PLAN (1 / ES-101)
1"=30'-0"

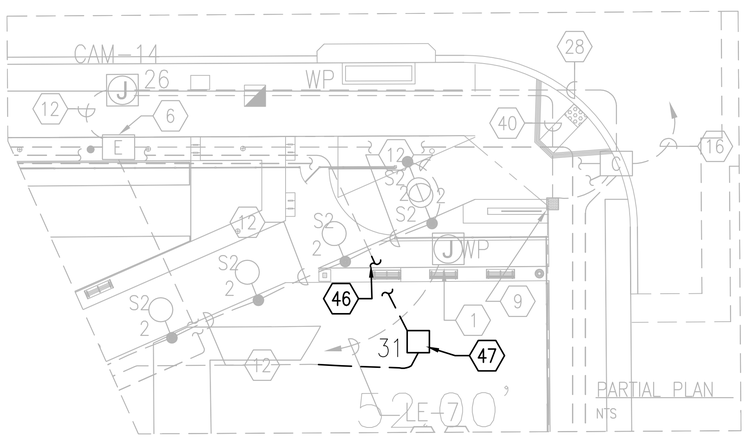

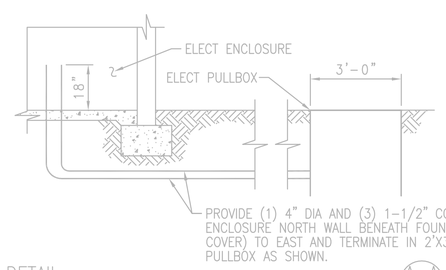

DETAIL (A-A / -)
NTS

30'-0" 0 30'-0" 60'-0"
1"=30'-0"

REV.	DATE		BY	SUB.	APP.
	08.08.16	GENERATOR/LANDSCAPE MODIFICATION BID SET			

DESIGNED BY A. NICHOLS
DRAWN BY W STEBOK
CHECKED BY R. GENATO
APPROVED BY R.JANIK
DATE 08.08.16

OmniTrans — Connecting Our Communities
Governments SANBAG Working Together — SAN BERNARDINO ASSOCIATED GOVERNMENTS
HDR — 2280 Market Street, Suite 100, Riverside, Ca 92501-2110

SUBMITTED: _____ PROJECT MANAGER
APPROVED: _____

REGISTERED PROFESSIONAL ENGINEER — RAYMOND I. GENATO — No. E17995 Exp. 12-31-16 — ELECTRICAL — STATE OF CALIFORNIA

TRANSIT CENTER

ELECTRICAL SITE PLAN

CONTRACT NO. IFB 16-1001520
DRAWING NO. ES-101
REVISION
SHEET NO. 0F
SCALE 1"=30'-0"

C:\pwworking\sac\d0685\d0818\207-E-0101.dwg, ES-101, 8/26/2016 2:31:04 PM, EGUERRER

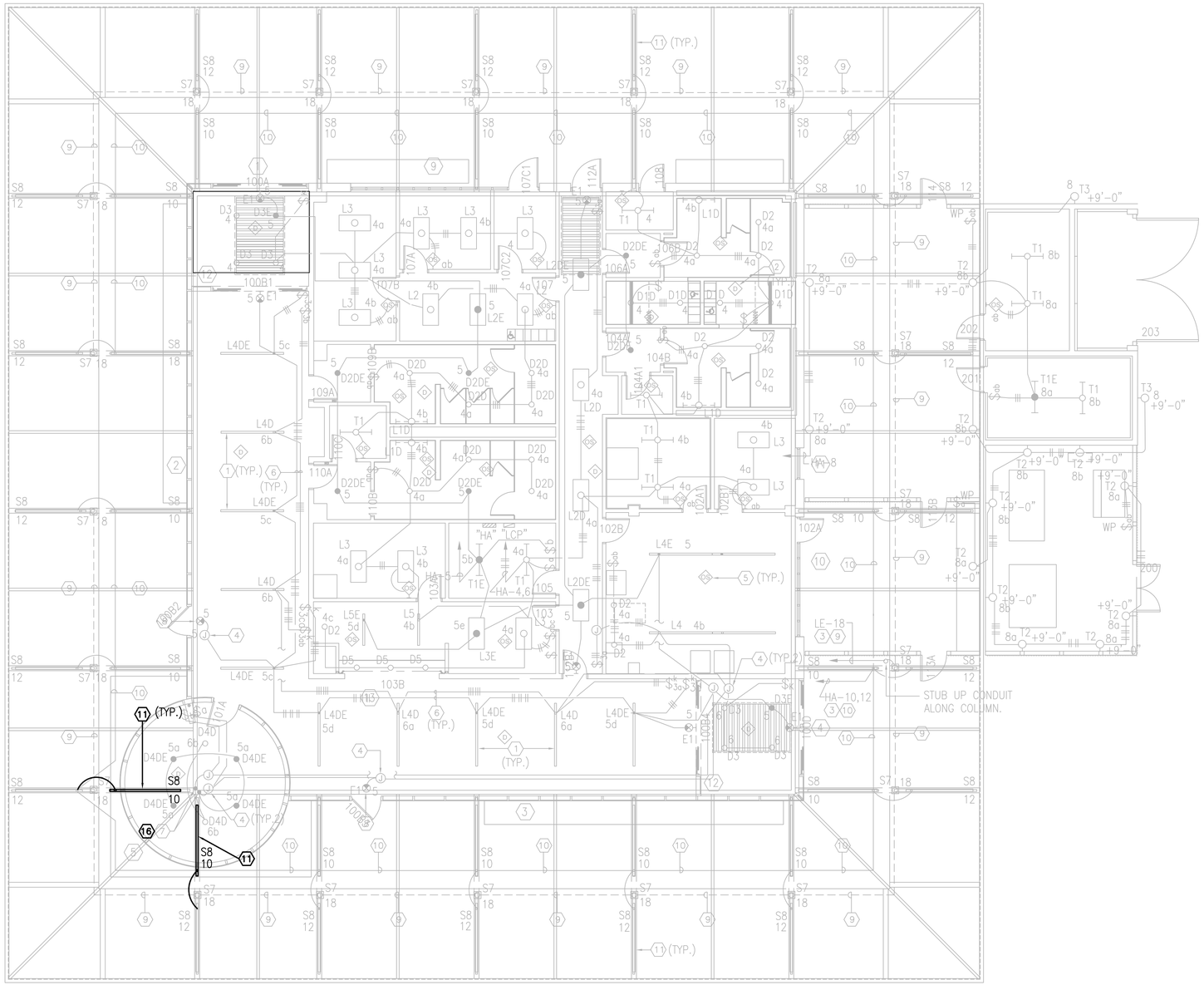

LIGHTING FLOOR PLAN

1/8"=1'-0"

1
EL-101

GENERAL NOTES:

1. FOR EXACT LOCATION OF LIGHTING FIXTURES, REFER TO ARCHITECTURAL REFLECTED CEILING PLAN.

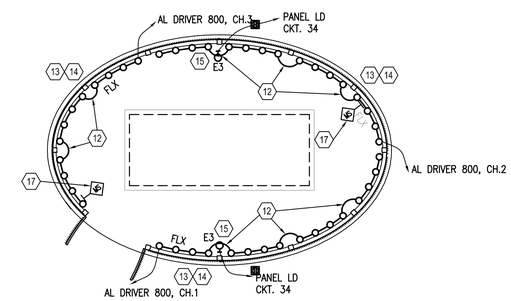

REFERENCE NOTES:

1. LIGHT FIXTURE TYPES "L4" AND "L4E" OUTLET BOX SHALL BE MOUNTED ON THE HIGHER CEILING. COORDINATE ROUTING OF DUCTWORKS WITH MECHANICAL WHEN HANGING FIXTURE IN BETWEEN CEILING CLOUDS WITH THE SAME MOUNTING HEIGHT.
2. MOUNT DAYLIGHT HARVESTING DEVICE NEAR THE SOLAR TUBES, COORDINATE EXACT LOCATION IN FIELD. (TYPICAL).
3. ROUTE CIRCUIT VIA LIGHTING CONTROL PANEL "LCP".
4. MOUNT J-BOX ON THE HIGHER CEILING.
5. MOUNT CEILING MOUNTED OCCUPANCY SENSOR AT LEAST +5' AWAY FROM THE DIFFUSER.
6. IN WAITING/LOBBY AREA, ROUTE CONDUIT FOR LIGHT FIXTURES "L4" AND "L4E" IN THE HIGHER CEILING.
7. STUB DOWN CONDUIT, RUNNING ON THE FACE OF THE COLUMN, DOWN TO THE DOWNLIGHT.
8. PENDANT EXIT SIGN ABOVE THE DOOR.
9. 3/4"C.-2#10 AND 1#10GND AND 1"C WITH DMX CONTROL CABLE TO BE TERMINATED IN DMX512 MOUNTED ADJACENT TO LIGHTING CONTROL PANEL.
10. 1"C.-4#10 AND 1#10GND. ROUTE CONDUIT ON THE ROOF.
11. LIGHT FIXTURE TYPE "S8" SHALL BE MOUNTED SURFACE BELOW THE HORIZONTAL BEAM, SEE ARCHITECTURAL SHEET A-120.
12. USE FLEXIBLE LINK KIT TO CONNECT EACH 7' LENGTH OF LED STRIP LIGHTS. LINK KITS TO BE USED TO SPAN ACROSS VERTICAL POSTS TO CONNECT TO NEXT LED STRIP LIGHT. DO NOT CONNECT MORE THAN FOUR 7' LENGTHS OF LED STRIP LIGHTS PER CIRCUIT. USE END CAP KITS AT THE END OF EACH SECTION.
13. THE LED STRIP LIGHTS SHOWN ARE MOUNTED ON THE UPPER MULLION WITH THE LIGHTS FACING DOWN. USE SELF-LOCKING MOUNTING CHANNEL KITS TO MOUNT LIGHTS TO MULLION.
14. MOUNT LED STRIP LIGHTS TO THE LOWER MULLION WITH THE LIGHT FACING UP. THE LAYOUT OF THE LOWER LIGHTS SHALL BE SAME AS THE UPPER MULLION. THE LOWER STRIP LIGHTS SHALL ALSO BE ROUTED TO THE AL DRIVER 800 CHANNEL 4, 5, AND 6 RESPECTIVELY. USE LINK KITS, END CAPS, AND MOUNTING HARDWARE AS SPECIFIED IN KEYNOTES 12 AND 13
15. MOUNT WALL PACK LED LIGHT ABOVE 9' AFF.
16. VERIFY WIRING IN FIELD FOR (2) TWO LIGHT FIXTURES TYPE "S8". CONNECT TO CIRCUIT 10 ON PANEL HA.
17. HUBBELL HBA WASP 2 OCCUPANCY SENSOR, OUTDOOR RATED. MOUNT TO COLUMN. ALL MOTION SENSORS ARE SPLICED FROM THE SAME CIRCUIT.

N

REV.	DATE		BY	SUB.	APP.
	08.08.16	GENERATOR/LANDSCAPE MODIFICATION BID SET			

DESIGNED BY A. NICHOLS
DRAWN BY W STEBOK
CHECKED BY R. GENATO
APPROVED BY R.JANIK
DATE 08.08.16

OmniTrans — Connecting Our Communities
Governments SANBAG Working Together — SAN BERNARDINO ASSOCIATED GOVERNMENTS
HDR — 2280 Market Street, Suite 100, Riverside, Ca 92501-2110

SUBMITTED: _____ PROJECT MANAGER
APPROVED: _____

REGISTERED PROFESSIONAL ENGINEER — RAYMOND I. GENATO — No. E17995 — Exp. 12-31-16 — ELECTRICAL — STATE OF CALIFORNIA

TRANSIT CENTER

LIGHTING FLOOR PLAN

CONTRACT NO. IFB 16-1001520
DRAWING NO. EL-101
REVISION
SHEET NO. OF
SCALE 1/8" = 1'-0"

002 of 017

C:\pwworking\sac\d0688\D2818\D207-E-1101.dwg, EL-101, 8/26/2016 2:33:00 PM, EQUERRER

GENERAL NOTES:

1. FOR EXACT LOCATION OF HVAC UNITS, REFER TO MECHANICAL DRAWINGS.

REFERENCE NOTES:

(1) FOR IRRIGATION CONTROLLER

(2) FOR CART/SCOOTER CHARGING STATION.

(3) MAIN GROUNDING BUS BAR IN NEMA 3R ENCLOSURE, REFER TO DWG E-500 FOR TYPICAL DETAIL. MOUNT 18" ABOVE GRADE.

(4) QUAD RECEPTACLE MOUNTED ON THE LOW VOLTAGE RACK, COORDINATE WITH IT FOR EXACT LOCATION.

(5) PROVIDE 94" X 72"' CONCRETE UTILITY PAD, PER UTILITY COMPANY DESIGN STANDARDS. COORDINATE WITH UTILITY REPRESENTATIVE.

(6) 4"HIGH HOUSEKEEPING CONCRETE PAD. PAD IS 6" WIDER THAN MSB, ALL SIDES.

(7) (4) 2-1/2" UNDERGROUND SPARE CONDUIT ONLY FOR FUTURE BUILDING IN PLAZA. SEE ES-101 FOR CONTINUATION.

(8) WEATHERPROOF TYPE 30AS,120V,1ø, DISCONNECT SWITCH. MAKE CONNECTION TO PEBBLE FOUNTAIN. COORDINATE WITH LANDSCAPE FOR EXACT LOCATION.

(9) TO SOUTHERN CALIFORNIA EDISON INCOMING SERVICE.

(10) TO PHOTOVOLTAIC INVERTERS IN ELECTRICAL ROOM. FOR FEEDER SIZE SEE DWG. E-601.

(11) TO PANEL "HA" AND DISCONNECT SWITCH "DTA" IN ELECTRICAL ROOM. FOR FEEDER SIZE SEE DWG. E-601.

(12) NEMA 3R, 30A, 208VAC, 1-PH, DISCONNECT SWITCH, SURFACE MOUNTED.

(13) (4) 2" CO WITH 3/8" NYLON PULL ROPE FOR SYSTEM SECURITY INTERCONNECTION WITH CREW HOUSE PROTECTION. SEE SHEET ES-101 FOR CONTINUATION.

(14) STUB UP CONDUITS ALONG WALL, CAP, PROTECT AND LABEL "SECURITY".

(15) REFER TO E-601 FOR FEEDER SIZE.

(16) JUNCTION BOXES FOR CAMERAS AND ASSOCIATED CONDUITS ARE INTENDED AND SIZED FOR ELECTRICAL POWER ONLY. INSTALL ABOVE CEILING TO MINIMIZE VISUAL IMPACT.

(17) PROVIDE 1"C WITH 2#10+1#12 GND TO POWER "LE", CIRCUIT 28 ROUTE CONDUIT ABOVE CEILING TO MINIMIZE VISUAL IMPACT.

(18) JUNCTION BOXES FOR CAMERAS AND ASSOCIATED CONDUITS ARE INTENDED AND SIZED FOR ELECTRICAL POWER ONLY.

(19) 1"C (FLEX) - 2#12 + 1#12 GND BETWEEN JUNCTION BOX AND CCTV CAMERA.

(20) 1"C - 2#12 + 1#12 GND BETWEEN JUNCTION BOX AND CAMERA. ROUTE CONDUIT TO BUILDING EXTERIOR AND SEAL PER DIVISION 7.

(21) PROVIDE 1"C WITH 2#10+1#12 GND TO POWER CCTV FROM PANEL "LD", CIRCUIT 30. INTERIOR TO BE ROUTED IN CEILING TO MINIMIZE VISUAL IMPACT. ROUTE EXTERIOR CONDUITS UNDERGROUND OR IN SLAB.

(22) PENETRATE THROUGH WALL INTO TRASH AREA 203 AND ROUTE CONDUIT ALONG HEADER SEAL PENETRATION PER DIVISION 7.

(23) 4" C - (QTY:8) 350 MCM + 1-2/0 GND.

(24) 1-1/2" C - 12#12, 18#14, 5#12 GND.
1-1/2" C - (QTY:6) MANUFACTURER CABLES (14/2).
1-1/2" C - 2 CAT6 CABLES, 1 CAT5 CABLE
1"C - (1) 22/6 CABLE, (1) 22/4 CABLE, (1) 18/2 CABLE

(25) 1-1/2" C - 4#12, 22#14, 2#12 GND TERMINATE 16#14 TO TERMINAL BLOCKS MOUNTED INSIDE J-BOX.
1-1/2" C - (QTY:6) MANUFACTURER CABLES (14/2).

(26) 1-1/2" C - 8#12, 4#12 GND. ROUTE CONDUIT AND TERMINATE TO PANEL LD CIRCUITS 25, 27, 29 FOR GENERATOR BATTERY AND HEATER, AND CKT 34 FOR EMERGENCY LIGHT AND CKT 1 FOR RECEPTACLE.

(27) 4" HIGH HOUSE KEEPING PAD. EXISTING PAD IS 3'X6'. ENLARGE PAD TO 4'X6;. FIELD VERIFY LOCATION AND ROUTING OF EXISTING CONDUITS TO ATS PAD. REROUTE EXISTING CONDUITS AND STUB UP INTO ATS PAD AS NEEDED.

(28) 1-1/2" C - 6#12, 12#14, 12#12 GND.
1" C - 1 CAT5 CABLE
CONNECT 2#14 TO TERMINAL FOR 30VDC POWER TO REMOTE ANNUNCIATOR PANEL

(29) NEMA 12 ENCLOSURE. 24"Hx36"x12"D MOUNT DRIVER AND DMX CONTROLLERS INSIDE.

(30) 6"Hx6"Wx4'D, NEMA 12 JUNCTION BOX. WALL MOUNTED. INSTALL DIN RAIL WITH 20 TERMINAL BLOCKS.

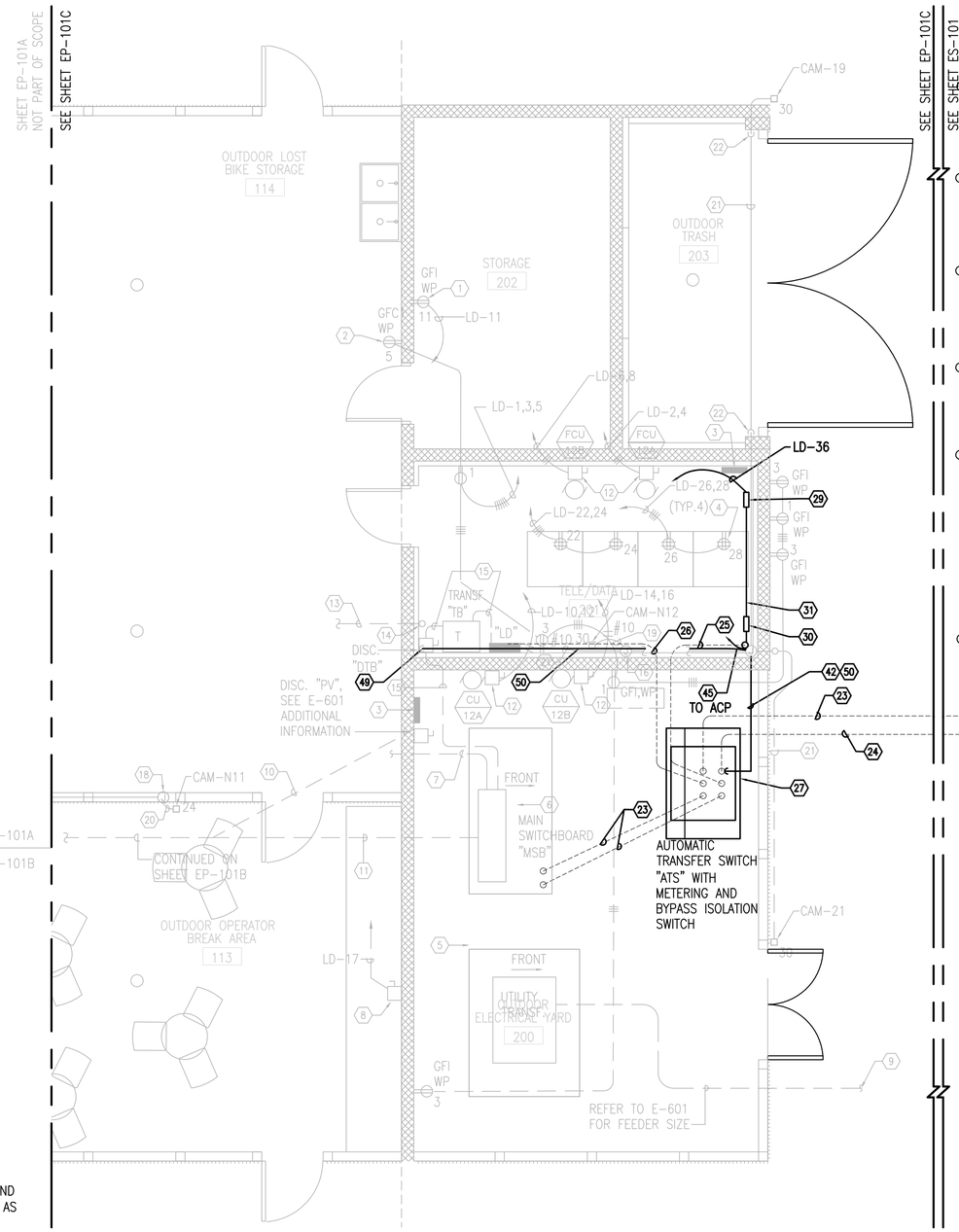

POWER FLOOR PLAN - AREA "C"
1/4"=1'-0"
1 EP-101C

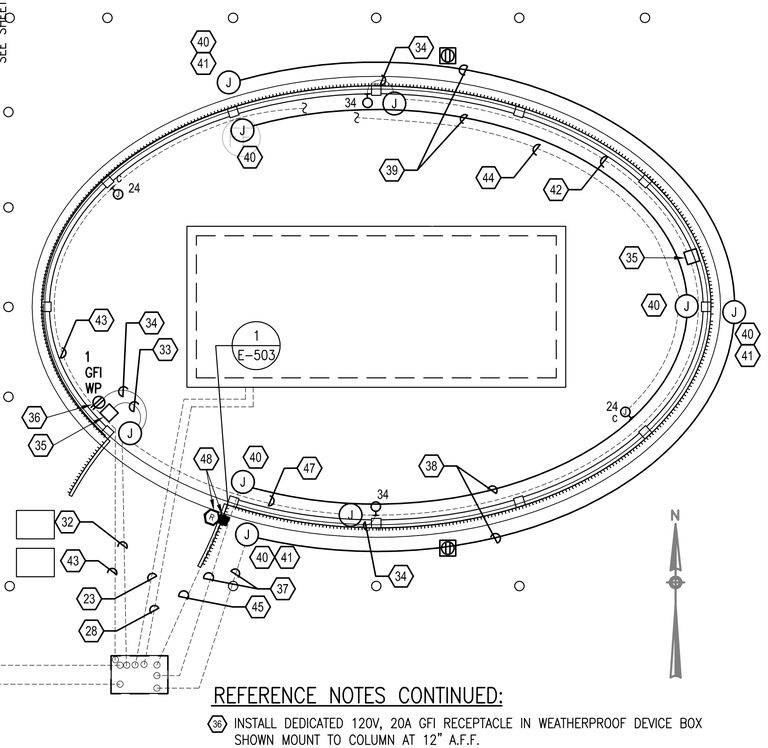

REFERENCE NOTES CONTINUED:

(31) 1-1/2" C - (QTY:6) MANUFACTURER CABLES (14/2).
1" C - 4#12, 4#14, 2#12 GND.

(32) 1" C - 6#12, 4#14, 3#12, GND.

(33) ¾" C - 2#12, 4#14, 1#12, GND.

(34) ¾" C - 2#12, 1#12, GND.

(35) HUBBELL HBA WASP 2 OCCUPANCY SENSOR, OUTDOOR RATED. MOUNT TO COLUMN. ALL MOTION SENSORS ARE SPLICED FROM THE SAME CIRCUIT.

(36) INSTALL DEDICATED 120V, 20A GFI RECEPTACLE IN WEATHERPROOF DEVICE BOX SHOWN MOUNT TO COLUMN AT 12" A.F.F.

(37) 1 ½" C - 3 MANUFACTURER CABLES (14/2).

(38) 1 ½" C - 2 MANUFACTURER CABLES (14/2).

(39) 1 ½" C - 1 MANUFACTURER CABLES (14/2).

(40) REFER TO EL-101. ONE STRIP OF LED LIGHTS IS FED FROM EACH JUNCTION BOX.

(41) SEE KEYNOTE (14) ON DWG. EL-101. THESE JUNCTION BOXES ARE MOUNTED TO THE LOWER MULLION ON THE INSIDE OF THE GENERATOR ENCLOSURE.

(42) 1"C - 2#12, 1#12 G
(1) 22/6 CABLE
(1) 22/4 CABLE
(1) 18/2 CABLE

(43) 1-½"C - 2 CAT6 CABLES FOR WALL MOUNTED SECURITY CAMERAS

(44) 1"C-1 CAT6 CABLE

(45) 1"C - (1) 22/6 CABLE
(1) 22/4 CABLE
(1) 18/2 CABLE

(46) 1-½"C - 2 CAT6 CABLES TO EXISTING JUNCTION BOX

(47) 1"C - 6#12, 3#12 G

(48) REFER TO EC-001 FOR COMMUNICATION SYMBOL LIST.

(49) ROUTE CONTENTS OF (50) TO EXISTING 4" COMMUNICATION CONDUIT TO ELECTRICAL ROOM. FOR CONTINUATION, SEE EC-101.

(50) 1"C - 2#14, 1 CAT5 CABLE

4'-0" 0 4'-0" 8'-0"
1/4"=1'-0"

REV.	DATE		BY	SUB.	APP.
	08.08.16	GENERATOR/LANDSCAPE MODIFICATION BID SET			

DESIGNED BY A. NICHOLS
DRAWN BY W STEBOK
CHECKED BY R. GENATO
APPROVED BY R.JANIK
DATE 08.08.16

OmniTrans — Connecting Our Communities
Governments SANBAG Working together
SAN BERNARDINO ASSOCIATED GOVERNMENTS
HDR
2280 Market Street
Suite 100
Riverside, Ca 92501-2110

SUBMITTED: _____ PROJECT MANAGER
APPROVED: _____

REGISTERED PROFESSIONAL ENGINEER RAYMOND I. GENATO No. E17995 Exp. 12-31-16 ELECTRICAL STATE OF CALIFORNIA

TRANSIT CENTER

POWER FLOOR PLAN

CONTRACT NO. IFB 16-1001520
DRAWING NO. EP-101C
REVISION
SHEET NO. OF
SCALE 1/4" = 1'-0"

003 of 017

C:\pwworking\sac\d0685629\181207-E-1104.dwg, EP-101C, 8/26/2016 2:38:47 PM, EGUERRER

GENERAL TELECOM NOTES:

1. DRAWINGS FOR THIS WORK ARE DIAGRAMMATIC, INTENDED TO CONVEY THE EXTENT, GENERAL ARRANGEMENT AND LOCATIONS OF THE WORK. BECAUSE OF THE SCALE OF THE DRAWINGS, CERTAIN BASIC ITEMS SUCH AS CONDUIT FITTINGS, ACCESS PANELS, CABINET SIZES, SLEEVES, PULL BOXES, BACKBOXES, AND JUNCTION BOXES MAY NOT BE SHOWN. INCLUDE ALL ITEMS WHERE REQUIRED BY CODE, OTHER SECTIONS, AND FOR PROPER INSTALLATION OF THE WORK.
2. ALL TELECOMMUNICATIONS WORK SHALL CONFORM TO ALL APPLICABLE NATIONAL, STATE AND LOCAL BUILDING CODES AND SHALL BE IN COMPLIANCE WITH TIA/EIA STANDARDS.
3. DO NOT SCALE ANY DRAWINGS. DIMENSIONS TAKEN FROM CENTERLINE OF DEVICE OR GANG BOX SHALL BE FOLLOWED. TELECOMMUNICATIONS DEVICES ARE SHOWN FOR LOCATION AND TYPE ONLY.
4. INCLUDE SUCH ITEMS AS REQUIRED FOR A COMPLETELY OPERATIONAL AND FULLY FUNCTIONAL SYSTEM, WHETHER OR NOT SPECIFICALLY INDICATED.
5. INSTALL CABLES IN ACCORDANCE WITH THE N.E.C., N.F.P.A. AND SECTION 16742 OF THE SPECIFICATIONS.
6. ALL WALL OUTLETS, COVER PLATES, DEVICES, ETC. SHALL BE FURNISHED, INSTALLED AND LABELED BY THE TELECOMMUNICATIONS CONTRACTOR AS REQUIRED.
7. RISER CONDUIT SHOWN FOR REFERENCE ONLY. ALL RISER CONDUIT BY ELECTRICAL CONTRACTOR.
8. SHOULD JOB CONDITIONS REQUIRE RELOCATION OF PLANNED TELEPHONE OR DATA OUTLETS, THE CONTRACTOR SHALL NOTIFY THE OWNER FOR APPROVAL OF ALTERNATE LOCATION PRIOR TO THE START OF ANY WORK.
9. CONTRACTOR TO COORDINATE FINAL LOCATION FOR OWNER EQUIPMENT AS LISTED. CONTRACTOR TO CONSULT WITH OWNER FOR FINAL EQUIPMENT CONNECTIONS AND HOOK-UPS.
10. ALL ELECTRIC WORK AND CONSTRUCTION WORK PERFORMED TO FACILITATE THE TELEPHONE AND DATA SYSTEM SHALL BE INSTALLED IN ACCORDANCE WITH THE ANSI/TIA/EIA 569 STANDARD AND N.E.C. REQUIREMENTS FOR INSTALLATION OF ANY REQUIRED CONDUIT.
11. COORDINATE WALL COMMUNICATION AND DATA OUTLET LOCATIONS WITH POWER OUTLETS AND FURNITURE TO BE INSTALLED ON WALL. COORDINATE SYSTEMS FURNITURE OUTLETS WITH COUNTY FURNITURE INSTALLER.
12. CABLE JACKETING SHALL BE A DIFFERENT COLOR FOR DATA/VOICE AND FIBER OPTIC CABLE. THIS COLOR SCHEME SHALL BE CONSISTENT THROUGHOUT THE INSTALLATION. REFER TO RACK DETAILS AND JACK FACEPLATE DETAIL FOR COLOR REQUIREMENTS.
13. ALL HORIZONTAL DATA/TELECOM CABLING SHALL BE TESTED TO CATEGORY 6 PERFORMANCE SPECIFICATIONS AS DEFINED IN ANSI/TIA/EIA 568-B.2. TEST RESULTS TO BE SUBMITTED FOR ARCHITECTS REVIEW.
14. COMPLY WITH TIA/EIA-606A LABELING STANDARDS BY CLEARLY LABELING ALL COMMUNICATIONS OUTLETS, WIRING AND CROSS CONNECTION POINTS.
15. FIRE SEAL AND LABEL ALL PENETRATIONS OF FIRE RATED ASSEMBLIES AS PER TIA/EIA 569-A ANNEX "A" TO MAINTAIN FIRE RATING AND U.L. RATING.
16. WHERE A PANELBOARD (ELECTRICAL POWER PANELS) IS LOCATED IN THE SAME ROOM OR SPACE AS THE TELECOMMUNICATIONS MAIN GROUNDING BUSBAR (TMGB) THAT PANELBOARD'S ALTERNATING CURRENT EQUIPMENT GROUND (ACEG) BUS (WHEN EQUIPPED) SHALL BE BONDED TO THE TMGB BY THE ELECTRICAL CONTRACTOR.
17. THE TMGB SHALL BE AS CLOSE TO THE PANELBOARD AS PRACTICAL AND SHALL BE INSTALLED BY THE ELECTRICAL CONTRACTOR TO MAINTAIN CLEARANCES REQUIRED BY APPLICABLE ELECTRICAL CODES.
18. ALL CONNECTIONS OF CONDUCTORS FOR BONDING TELECOMMUNICATIONS EQUIPMENT SHALL UTILIZE EXOTHERMIC WELDING, LISTED COMPRESSION LUGS, OR OTHER IRREVERSIBLE COMPRESSION TYPE CONNECTIONS. TWO-HOLE LUGS ARE PREFERRED.
19. ALL METALLIC PATHWAYS FOR TELECOMMUNICATIONS CABLING LOCATED WITHIN THE SAME ROOM OR SPACE AS THE TMGB SHALL BE BONDED TO THE TMGB. HOWEVER, FOR METALLIC PATHWAYS CONTAINING GROUNDING CONDUCTORS WHERE THE PATHWAY IS BONDED TO THE GROUNDING CONDUCTOR, NO ADDITIONAL BOND TO THE TMGB IS REQUIRED.
20. THE TMGB AND TELECOMMUNICATIONS GROUNDING BUSBAR (TGB) SHALL BE INSULATED FROM ITS SUPPORT. A MINIMUM OF 2 IN. SEPARATION FROM THE WALL IS RECOMMENDED FOR ACCESS TO THE REAR OF THE BUSBAR.
21. THE TMGB SHALL BE LOCATED AS SHOWN ON DRAWINGS, AND SUCH THAT IT IS ACCESSIBLE TO TELECOMMUNICATIONS PERSONNEL. A PRACTICAL LOCATION FOR THE TMGB IS TO THE SIDE OF THE PANELBOARD (WHERE PROVIDED). THE MOUNTING HEIGHT OF THE TMGB SHOULD BE ADJUSTED TO ACCOMMODATE OVERHEAD OR UNDERFLOOR CABLE ROUTING.
22. REFER TO ARCHITECTURAL SHEETS FOR MOUNTING HEIGHTS FOR ALL OUTLETS AT COUNTERS, MILLWORK, AND TELEVISION HEIGHT REQUIREMENTS.
23. REFER SECTION 13742 FOR COLOR AND MATERIALS TO BE USED FOR FACEPLATES UNLESS SPECIFICALLY INDICATED ON THESE DRAWINGS.
24. AT NO TIME SHALL A CONDUIT RUN EXCEED (2) 90° BENDS WITHOUT THE INSERTION OF A PULL BOX.
25. ALL COMMUNICATION DEVICES SHALL HAVE A MINIMUM OF 1 1/4" CONDUIT TO NEAREST ACCESSIBLE CEILING SPACE.
26. ALL CONDUIT RUNS EXCEEDING 15' SHALL BE EQUIPPED WITH A PULL-STRING WITH MINIMUM TEST RATING OF 400 LB.
27. NO ONE CONDUIT SEGMENT SHALL BE MORE THAN 100' WITHOUT THE INSERTION OF A PULL BOX.
28. THE CONTRACTOR SHALL PROVIDE A COMPLETE AND OPERATIONAL PUBLIC ADDRESS SYSTEM.
29. SPEAKERS WILL BE 70/25V CEILING MOUNTED IN CORRIDORS AT INTERVALS OF 25 FEET AND WALL MOUNTED IN HARD CEILING AREAS WITH OVERHEAD EQUIPMENT. SPEAKER HORNS WILL BE PLACED IN UTILITY AREAS WITH NO CEILING AND EXCESSIVE NOISE LEVELS.
30. NOT USED.
31. REFER TO ARCHITECTURAL INTERIOR PLANS FOR EXACT MOUNTING HEIGHT ANY LOCATIONS FOR ALL TELECOMMUNICATION OUTLETS, PUBLIC ADDRESS DEVICES, AND TELEVISIONS.

COMMUNICATIONS SYMBOLS LEGEND

	THE FOLLOWING SYMBOLS ARE FOR VOICE AND DATA COMMUNICATIONS. PROVIDE (1) 4S BOX WITH 1 1/4" C STUB UP TO 6" ABOVE NEAREST ACCESSIBLE CEILING SPACE. TELEPHONE OUTLET – WALL MOUNTED REQUIRES (1) CAT 6 CABLE # INDICATES DIFFERENT NUMBER OF CABLES IF REQUIRED. STANDARD TELE/DATA COMBINATION OUTLET – WALL MOUNTED @ +18"AFF, REQUIRES (3) CAT 6 CABLES DATA AND (1) CAT 6 CABLE VOICE. SEE DETAIL 2 ON SHEET E-502 STANDARD TELE/DATA COMBINATION OUTLET – FLOOR MOUNTED REQUIRES (3) CAT 6 CABLES DATA AND (1) CAT 6 CABLE VOICE. STANDARD DATA COMBINATION OUTLET – WALL MOUNTED REQUIRES (4) CAT 6 CABLES # INDICATES DIFFERENT NUMBER OF CABLES IF REQUIRED. CEILING MOUNTED WIRELESS ANTENNA SYSTEM THE FOLLOWING SUBSCRIPTS ARE USED TO INDICATE VARIOUS TYPES OF DEVICE LOCATIONS A — +48" ABOVE FINISHED FLOOR. W — WALL MOUNTED @ +42" AFF E — WALL MOUNTED ELEVATOR TELEPHONE OUTLET F — FURNITURE MOUNTED OUTLET (PART OF FURNITURE SYSTEMS)		TELE/DATA EQUIPMENT RACK HOMERUN ABOVE GRADE HOMERUN BELOW GRADE KEY NOTE INDICATOR CABLE TRAY – WIRE BASKET, SIZE AS NOTED.
	WALL/COLUMN MOUNTED FURNITURE FEED MODULE		
	COMBINATION COMMUNICATIONS/POWER POKE THRU FOR SYSTEM FURNITURE		
	COMBINATION COMMUNICATIONS/POWER OUTLET – FLOOR MOUNTED REQUIRES (4) CAT 6 CABLES # INDICATES DIFFERENT NUMBER OF CABLES IF REQUIRED.		
TV	WALL MOUNTED TELEVISION OUTLET AT 72" A.F.F UNLESS NOTED OTHERWISE REQUIRED (1) CAT 6 CABLE AND (1) COAXIAL CABLE		
V	WALL MOUNTED VOLUME CONTROL FOR PA SPEAKER		
S	CEILING MOUNTED PUBLIC ADDRESS SPEAKER		
S	WALL MOUNTED HORN TYPE PUBLIC ADDRESS SPEAKER		
J	CEILING JUNCTION BOX WITH TAMPER RESISTIVE HARDWARE SIZE BOX AS REQUIRED OR NOTED		
J	FLOOR JUNCTION BOX WITH TAMPER RESISTIVE HARDWARE		
J	WALL JUNCTION BOX 4"SQ WITH TAMPER RESISTIVE HARDWARE		THIS IS A STANDARD TELECOM SYMBOLOGY LEGEND, NOT ALL SYMBOLS MAY BE USED ON THIS PROJECT

GENERAL SECURITY NOTES

1. CONDUIT SIZES INDICATED ON DRAWINGS ARE MINIMUM ACCEPTABLE. ALL NEW CONDUIT SHALL BE SIZED TO PROVIDE SPARE CAPACITY IN ACCORDANCE WITH THE NEC.
2. CONTRACTOR SHALL BE RESPONSIBLE FOR FIELD VERIFYING EXISTING CONDITIONS PRIOR TO BIDDING AND INSTALLATION.
3. THESE DRAWINGS ARE DIAGRAMMATIC AND REFLECT DESIGN INTENT ONLY. ALL UNDERGROUND CONDUITS, SLEEVES, FEEDS TO EQUIPMENT INSTALLATION AND PLACEMENT OF THAT EQUIPMENT SHALL BE VERIFIED IN FIELD AND WITH OTHER TRADES PRIOR TO INSTALLATION. SECURITY CONTRACTOR SHALL VISIT SITE PRIOR TO SUBMITTING BID AND NOTE ALL APPARENT FEATURES WHICH MAY AFFECT THE WORK OF THIS CONTRACT. NO SUBSEQUENT ALLOWANCES WILL BE MADE FOR FAILURE TO VISIT SITE PRIOR TO BID OR FOR LACK OF FIELD COORDINATION WITH THE WORK OF THE OTHER TRADES.
4. COORDINATE ELECTRICAL ROUGH-IN REQUIREMENTS WITH THE ELECTRICAL CONTRACTOR/TRADES AT ALL LOCATIONS OF 240 VOLT POWERED EQUIPMENT.
5. WHERE ROUTING OF RACEWAY/CONDUIT IS SHOWN ON PLANS TO PASS THROUGH WALLS AND PARTITIONS, CORE DRILL PENETRATIONS UNLESS SPECIFICALLY NOTED OTHERWISE. SIMILAR CUTTING AND PATCHING TO MATCH EXISTING SURFACES MAY BE UTILIZED WHERE CONDITIONS PERMIT.
6. ALL FLOOR AND WALL CONDUIT PENETRATIONS SHALL BE SLEEVED AND SEALED WITH AN INTUMESCENT FIRE RESISTIVE SYSTEM IN ACCORDANCE WITH N.E.C., N.F.P.A. AND DIVISION 16 OF THE SPECIFICATIONS. PROVIDE 2 HOUR FIRE RATING UNLESS OTHERWISE NOTED. SEE DETAILS ON SHEET EC-501.
7. ALL INTERIOR CONDUIT SHALL BE A MINIMUM OF 3/4" AND EXTERIOR CONDUIT SHALL BE A MINIMUM OF 1" UNLESS OTHERWISE NOTED. CONDUIT SIZES INDICATED SHALL BE THE MINIMUM SIZES UTILIZED.
8. ALL CONDUIT AND WIRING SHALL BE CONCEALED UNLESS OTHERWISE NOTED ON THE DRAWINGS AND/OR LOCATED IN ELECTRICAL, MECHANICAL OR STORAGE ROOMS OR SIMILAR UNFINISHED SPACES.
9. THE CONTRACTOR SHALL BE RESPONSIBLE FOR VERIFYING THE LOCATIONS OF PARTITIONS AND AVOIDING CONFLICTS WITH LIGHTS, DIFFUSERS, GRILLES, DUCTWORK, AND OTHER OBSTRUCTIONS.
10. CONDUIT RUNS INDICATED REFLECT DESIGN INTENT ONLY. ALL PULL BOXES AND JUNCTION BOXES SHALL BE SIZED IN ACCORDANCE WITH THE N.E.C. CONTRACTOR SHALL VERIFY QUANTITY AND LOCATION OF PULL BOXES AND JUNCTION BOXES IN ACCORDANCE WITH CABLE MANUFACTURERS RECOMMENDATIONS.
11. CONTRACTOR SHALL HAVE THE OPTION TO COMBINE HOMERUN CONDUCTORS OF REMOTE DEVICES OF SAME TYPE AND VOLTAGE CLASS AS PER THE N.E.C. SIZE CONDUIT AND INSTALL CONDUCTORS IN ACCORDANCE WITH THE N.E.C., N.F.P.A. AND DIVISION 16 OF THE SPECIFICATIONS.
12. COORDINATE EXACT LOCATION(S) OF CEILING MOUNTED EQUIPMENT/DEVICES WITH ARCHITECTURAL PLANS, REFLECTED CEILING PLANS, STRUCTURAL PLANS, AND ALL AFFECTED TRADES PRIOR TO CONSTRUCTION AND INSTALLATION.
13. ROUTE ALL HOMERUNS FROM ALL SECURITY DEVICES TO SECURITY EQUIPMENT CABINETS AS INDICATED ON PLANS.
14. COORDINATE EXACT LOCATIONS OF ALL DESKTOP/COUNTER MOUNTED SECURITY EQUIPMENT WITH MILLWORK/ CASEWORK AND FURNITURE PLANS PRIOR TO INSTALLATION.
15. WHERE DEVICES ARE INSTALLED IN FIRE RATED PARTITIONS, REVIEW SURFACE AND RECESS MOUNTING OPTIONS WITH THE ARCHITECT TO PRESERVE THE FIRE RATING.
16. ALL CARD READERS AND INTERCOM STATIONS AT EXTERIOR LOCATIONS ARE TO BE WEATHERPROOF RATED.
17. ALL CONDUIT BENDS SHALL BE LONG AND SWEEPING WITH A MINIMUM RADIUS OF 6 TIMES THE DIAMETER FOR CONDUITS UP TO 2" OR 10 TIMES FOR LARGER CONDUITS.
18. ALL SECURITY DEVICE WIRING AND INTERCONNECTIONS BETWEEN BUILDINGS MUST BE IN CONDUIT AND INACCESSIBLE TO PHYSICAL TAMPERING. AT LOCATIONS WHERE JUNCTION BOXES OR ELECTRICAL FITTINGS WOULD PROVIDE ACCESS, COVERS MUST BE SECURED WITH TORX W/ PEG TAMPER RESISTIVE HARDWARE TIGHTENED TO MANUFACTURER'S SPECIFICATIONS.
19. UNLESS OTHERWISE INDICATED ON THE DRAWINGS, ALL SECURITY DEVICES ARE TO BE MONITORED AND CONTROLLED FROM THE SECURITY CONTROL ROOM.

ELECTRONIC COMMUNICATIONS & SECURITY SYMBOLS LEGEND

IC	DESK MOUNTED VIDEO INTERCOM STATION	R R	INTERLOCK CARD READER
IC	SINGLE-BUTTON WALL MOUNTED VIDEO INTERCOM STATION	D	WALL MOUNTED PUSH-BUTTON DURESS ALARM MOTION DETECTOR
	CONNECTION TO ELECTRIC DOOR STRIKE AND DOOR POSITION SWITCH.	D	DESK MOUNTED PUSH-BUTTON DURESS ALARM MOTION DETECTOR
	CONNECTION TO DOOR POSITION SWITCH.	SEC	SECURITY EQUIPMENT CABINET
	CONNECTION TO ELECTRIC AUTO DOOR AND DOOR POSITION SWITCH	ACP	ACCESS CONTROL PANEL
H	REQUEST TO EXIT CONNECTION TO DOOR HARDWARE	J C	WALL MOUNTED SECURITY CAMERA WITH JUNCTION BOX CONNECTION BETWEEN JUNCTION BOX AND CAMERA NOT SHOWN.
	CEILING MOUNTED REQUEST TO EXIT	J C	CEILING MOUNTED SECURITY CAMERA WITH JUNCTION BOX CONNECTION BETWEEN JUNCTION BOX AND CAMERA NOT SHOWN.
	REMOTE PUSH-BUTTON DOOR RELEASE TO ELECTRIC STRIKE	J S	WALL MOUNTED SECURITY MONITOR
R	WALL MOUNTED PROXIMITY CARD READER.	C	CONDULET
KP	WALL MOUNTED ACCESS KEYPAD FOR EMERGENCY RELEASE		
			THIS IS A STANDARD SECURITY SYMBOLOGY LEGEND, NOT ALL SYMBOLS MAY BE USED ON THIS PROJECT

REV.	DATE		BY/SUB.	APP.
	08.08.16	GENERATOR/LANDSCAPE MODIFICATION BID SET		

DESIGNED BY A. NICHOLS
DRAWN BY W STEBOK
CHECKED BY R. GENATO
APPROVED BY R.JANIK
DATE 08.08.16

OmniTrans Connecting Our Community.
Governments SANBAG Working Together SAN BERNARDINO ASSOCIATED GOVERNMENTS

HDR
2280 Market Street
Suite 100
Riverside, Ca 92501-2110

SUBMITTED: ____ PROJECT MANAGER
APPROVED: ____

REGISTERED PROFESSIONAL ENGINEER RAYMOND I. GENATO No. E17995 Exp. 12-31-16 ELECTRICAL STATE OF CALIFORNIA

TRANSIT CENTER

COMMUNICATION SYMBOL LIST AND GENERAL NOTES

CONTRACT NO. IFB 16-1001520
DRAWING NO. EC-001
REVISION
SHEET NO. OF
SCALE NONE

C:\pwworking\sac\d0689528\181207-E-1106.dwg, EC-001, 8/26/2016 2:39:44 PM, EGUERRER

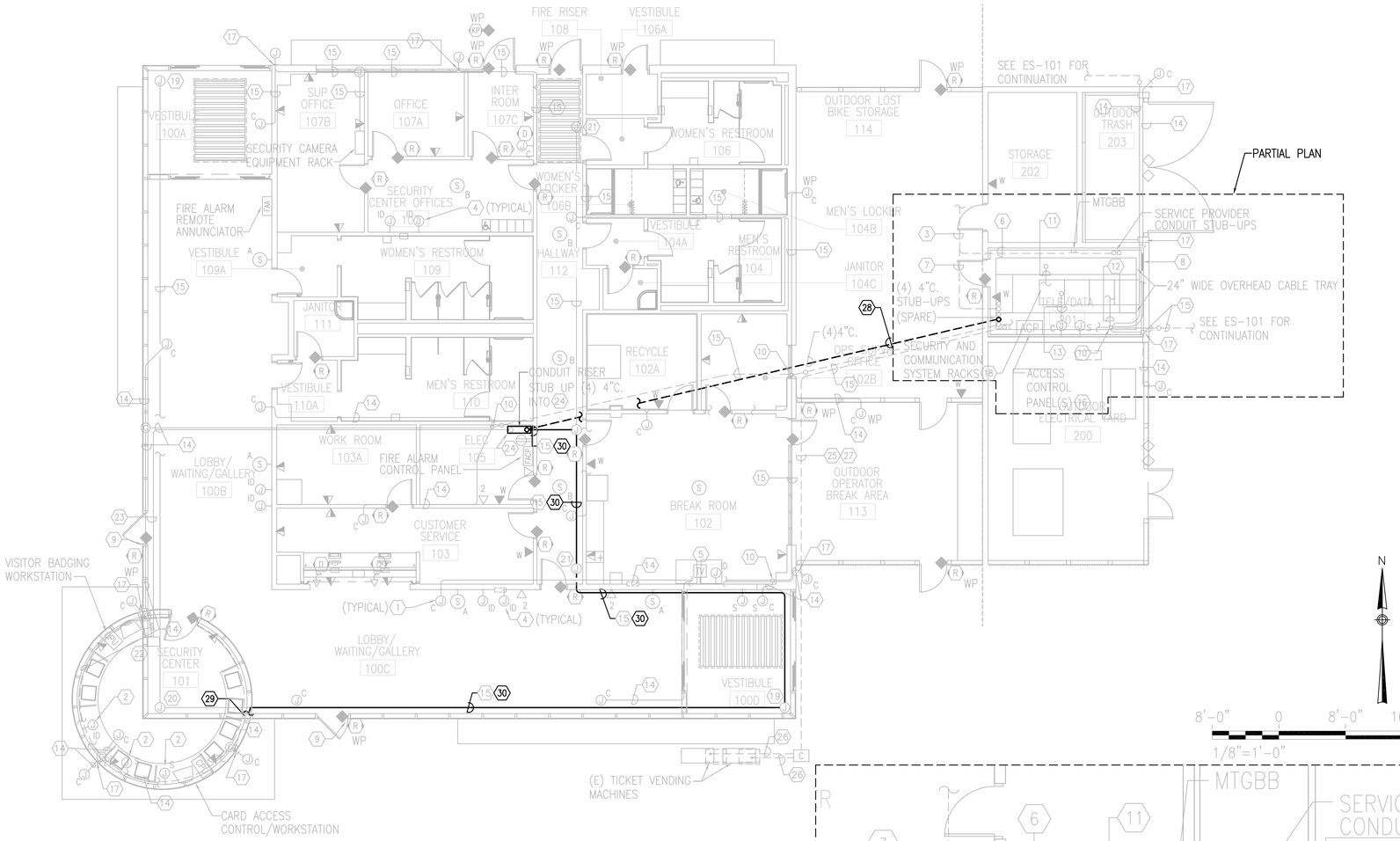

COMMUNICATION FLOOR PLAN

1/8"=1'-0"

1 EC-101

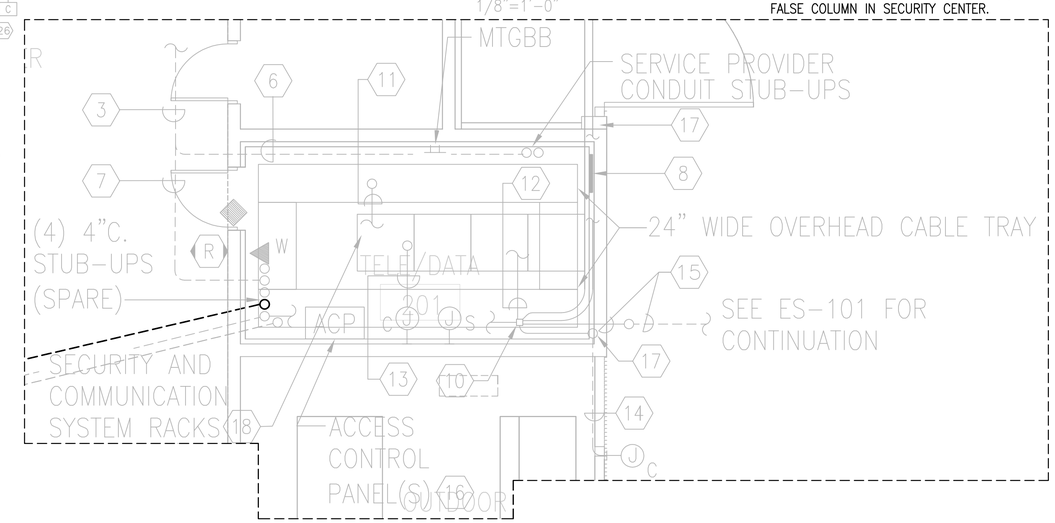

PARTIAL PLAN

NTS

GENERAL NOTES:

1. FOR EXACT LOCATION OF LOW VOLTAGE DEVICES, REFER TO ARCHITECTURAL ELEVATION DRAWINGS.
2. CAP AND PROTECT STUB-UPS

REFERENCE NOTES:

(21) MOUNT COMMUNICATION JUNCTION BOX ON WALL 8'-6" ABOVE FINISHED FLOOR.

(22) SURFACE MOUNT 24"W X 24"L X 12"D PULLBOX AND LOCATE IN SECURITY CENTER ROOM INTERIOR ROOF TO BE USED TO MARSHALL COMMUNICATION CONDUITS.

(23) (2) 3" COMMUNICATION CONDUITS FROM ELECTRICAL ROOM 105 TO SECURITY CENTER ROOM 101. SURFACE MOUNT TO WALL IN ROOM 101.

(24) 24"W X 6"H X 6"D NEMA 12 WIRING TROUGH HOFFMAN F66T24HC, OR EQUAL.

(25) CONTRACTOR TO INSTALL 1-1/2" CO WITH 3/8" NYLON PULLROPE FROM THE TELE/DATA ROOM 201 AND ROUTE BELOW GRADE TO FUTURE TVM.

(26) CONTRACTOR TO ROUTE 1" CO WITH 3/8" NYLON PULLROPE FROM THE COMMUNICATION 11 X 17 PULL BOX TO STUB UP FOR FUTURE TVM.

(27) PROVIDE 1"C FOR COMM. TO EMERGENCY PHONE.

(28) INSTALL (2) #14 AND 1 CAT5 CABLE IN EXISTING 4" COMMUNICATION CONDUIT FOR REMOTE ANNUNCIATOR PANEL. SEE CONTINUATION ON SHEET EP-101C.

(29) INSTALL REMOTE ANNUNCIATOR MODULE, FLUSH MOUNT TO PANEL COVER WALL ABOVE COUNTERTOP. SEAL PENETRATION W/ CAULK. VERIFY HEIGHT IN FIELD, 4'-0" A.F.F. MAX TO CENTERLINE OF MODULE.

(30) INSTALL (2) #14 AND 1 CAT5 CABLE IN EXISTING 2" COMMUNICATION CONDUIT TO FALSE COLUMN IN SECURITY CENTER.

REFERENCE NOTES:

(1) J-BOX FOR CCTV CAMERA. COORDINATE EXACT MOUNTING HEIGHT WITH SYSTEM PROVIDER.

(2) CCTV MONITORING STATION. COORDINATE MOUNTING HEIGHT WITH CCTV SYSTEM PROVIDER.

(3) (4) 4"CO, SEE DWG. ES-101 FOR CONTINUATION.

(4) J-BOX FOR DATA CONNECTION TO INFORMATION DISPLAY. PROVIDE (1) CAT6 CABLE FROM INFORMATION DISPLAY SERVER AS REQUIRED BY VENDOR/OWNER.

(5) (1) RG-11 COAX CABLE FROM MATV-TC TO TV DEVICES.

(6) (2)4"CO FOR INCOMING TELEPHONE UTILITY SERVICE PROVIDER.

(7) (2)4"CO FOR FUTURE BUILDING TELEPHONE SERVICE. LABEL, CAP, AND PROTECT.

(8) TELEPHONE BACKBOARD 3/4"C THICK FIRE RETARDANT TREATED PLYWOOD BACKBOARD. INSTALL FROM FLOOR LEVEL TO +8'-0" AFF AROUND TELE/DATA ROOM. DISPLAY FIRE RATING SYMBOL OF PLYWOOD.

(9) COORDINATE INSTALLATION OF CARD READER EQUIPMENT WITH STORE FRONT/ GLASS WALL INSTALLER PRIOR TO INSTALLATION FOR ROUTING OF SECURITY CABLING IN MULLION.

(10) 12"W X 12"L X 12"D PULLBOX LOCATE IN CEILING. PULLBOX TO BE USED TO MARSHALL COMMUNICATION CONDUITS.

(11) 2" CONDUIT. ROUTE CONDUIT BETWEEN CCTV EQUIPMENT RACK AND OVERHEAD CABLE TRAY. ROUTE COMMUNICATION CABLES FOR CCTV FOR THE TRAY TO THE CCTV EQUIPMENT RACK THROUGH THIS CONDUIT.

(12) 2" CONDUIT. ROUTE CONDUIT BETWEEN PULLBOX AND OVERHEAD CABLE TRAY. ROUTE COMMUNICATION CABLES FOR CCTV FROM THE PULLBOX INTO THE TRAY THROUGH THIS CONDUIT.

(13) 1"C WITH CAT 6 CABLE BETWEEN CAM-N12 JUNCTION BOX AND CCTV EQUIPMENT RACK

(14) 1"C WITH CAT 6 ETHERNET CABLES

(15) 2" CONDUIT WITH CAT 6 ETHERNET CABLES

(16) LOCATION OF ACCESS CONTROL PANEL IS DIAGRAMMATIC ONLY COORDINATE FINAL LOCATION WITH PANEL "LD".

(17) PENETRATE THROUGH WALL TO PROVIDE CONTROL SIGNAL CONDUITS TO EXTERIOR CAMERAS SEAL PER DIVISION 7

(18) RACKS WILL ALSO INCLUDE PA SYSTEM. PA SYSTEM AND EQUIPMENT SHALL BE BIDDER DESIGNED AND INSTALLED.

(19) MOUNT COMMUNICATION JUNCTION BOX ON VESTIBULE ROOF FOR WIFI CONNECTION AND DROP CONDUIT DOWN TO JUNCTION BOX ALONG COLUMN.

(20) MOUNT COMMUNICATION JUNCTION BOX ON SECURITY CENTER ROOM INTERIOR ROOF FOR WIFI CONNECTION.

REV.	DATE		BY	SUB.	APP.
	08.08.16	GENERATOR/LANDSCAPE MODIFICATION BID SET			

DESIGNED BY A. NICHOLS
DRAWN BY W STEBOK
CHECKED BY R. GENATO
APPROVED BY R.JANIK
DATE 08.08.16

OmniTrans — Connecting Our Community
Governments SANBAG Working for a Better Tomorrow
SAN BERNARDINO ASSOCIATED GOVERNMENTS
HDR — 2280 Market Street, Suite 100, Riverside, Ca 92501-2110

SUBMITTED: _____ PROJECT MANAGER
APPROVED: _____

REGISTERED PROFESSIONAL ENGINEER — RAYMOND I. GENATO — No. E17995 — Exp. 12-31-16 — ELECTRICAL — STATE OF CALIFORNIA

TRANSIT CENTER

SIGNAL AND COMMUNICATION FLOOR PLAN

CONTRACT NO. IFB 16-1001520
DRAWING NO. EC-101
REVISION
SHEET NO. OF
SCALE 1/8" = 1'-0"

C:\pwworking\sac\d0589528\81207-E-1107.dwg, EC-101, 8/26/2016 2:42:16 PM, EGUERRER

NOTE ALL ITEMS THAT ARE SCREENED ON THIS SHEET ARE EXISTING.

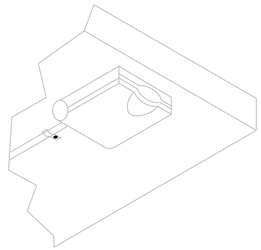

ISOMETRIC FROM UNDERSIDE OF DESK/COUNTERTOP

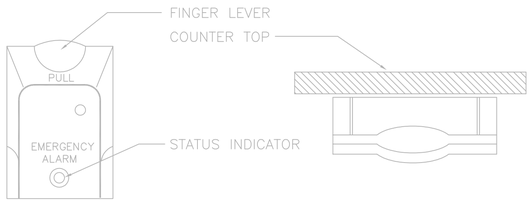

ELEVATION

SIDE VIEW

DESK MOUNTED DURESS ALARM (3 / E-503)

NO SCALE

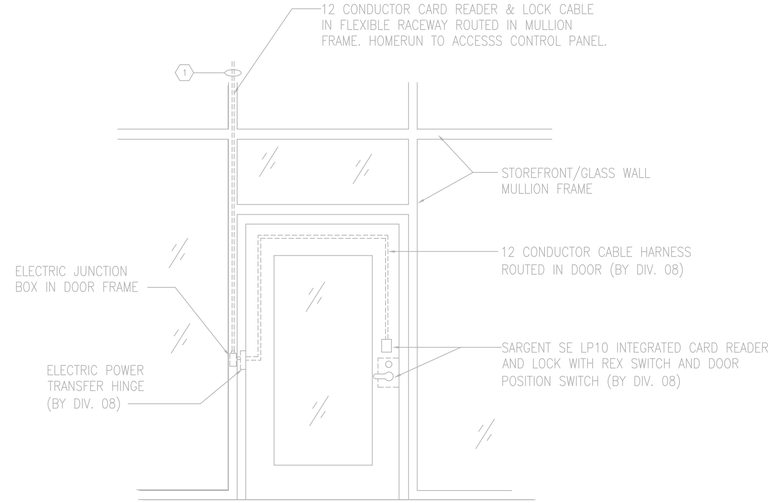

KEYNOTES:
1. COORDINATE ROUNTING OF CARD ACCESS CONTROL SYSTEM AND LOCK CABLING IN MULLION WITH MULLION FRAME MANUFACTURER/INSTALLER PRIOR TO INSTALLATION.

ELEVATION – DOORS 100B2 & 100B3 (2 / E-503)

NO SCALE

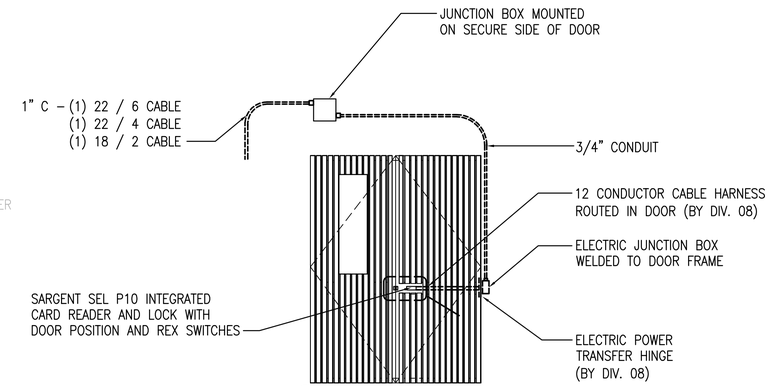

DOOR 204 DETAIL (1 / E-503)

NO SCALE

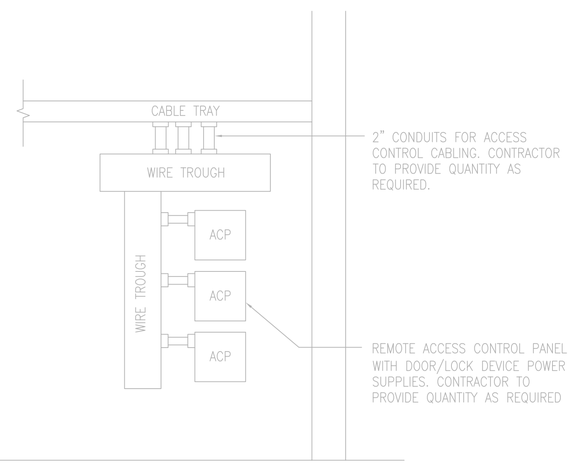

NOTES:
1. CONTRACTOR SHALL DETERMINE EXACT QUANTITIES OF ACCESS CONTROL PANELS AND CONDUITS IN ACCORDANCE WITH SYSTEM REQUIREMENTS.
2. COORDINATE LOCATION AND INSTALLATION OF ACCESS CONTROL EQUIPMENT WITH OTHER EQUIPMENT IN TELE/DATA ROOM PRIOR TO INSTALLATION.

FREE STANDING WALL MOUNTED ACCESS CONTROL PANELS (5 / E-503)

NO SCALE

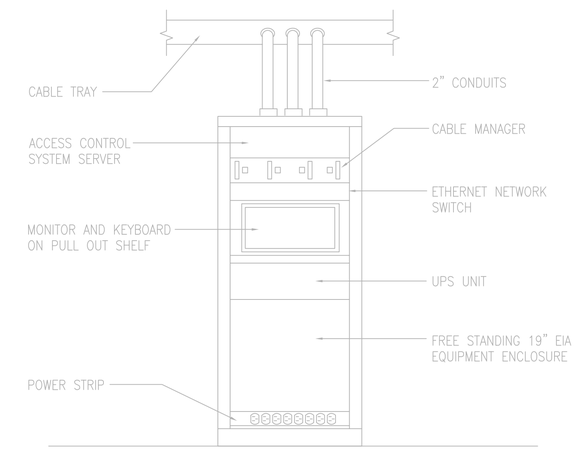

NOTES:
1. COORDINATE EXACT LOCATION WITH VIDEO SURVEILLANCE AND COMMUNICATIONS EQUIPMENT.

FREE STANDING ACCESS CONTROL EQUIPMENT CABINET (4 / E-503)

NO SCALE

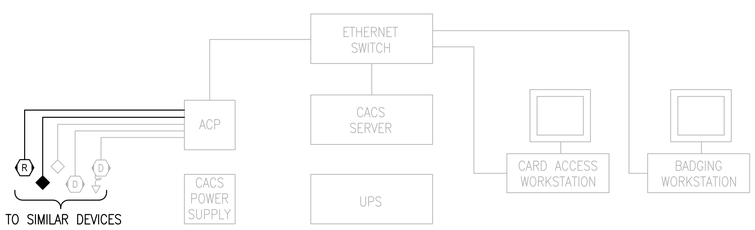

ACCESS CONTROL RISER DIAGRAM (6 / E-503)

NO SCALE

REV.	DATE		BY	SUB.	APP.
	08.08.16	GENERATOR/LANDSCAPE MODIFICATION BID SET			

DESIGNED BY A. NICHOLS
DRAWN BY W STEBOK
CHECKED BY R. GENATO
APPROVED BY R.JANIK
DATE 08.08.16

OmniTrans Connecting the Community
Governments SANBAG Working for a better tomorrow
SAN BERNARDINO ASSOCIATED GOVERNMENTS
HDR 2280 Market Street Suite 100 Riverside, Ca 92501-2110

SUBMITTED: _____ PROJECT MANAGER
APPROVED: _____

REGISTERED PROFESSIONAL ENGINEER RAYMOND I. GENATO No. E17995 Exp. 12-31-16 ELECTRICAL CALIFORNIA

TRANSIT CENTER

COMMUNICATION DETAILS

CONTRACT NO. IFB 16-1001520
DRAWING NO. E-503
REVISION
SHEET NO. OF
SCALE NONE

C:\pwworking\sac\d0585258\18\17075-E-1204.dwg, E-503, 8/26/2016 2:53:49 PM, EQUEERER

LIGHTING FIXTURE SCHEDULE

FIXT. NO	DESCRIPTION	MANUFACTURER, MODEL #	QUANTITY AND WATTS	LAMPS Load VA FLUOR	LAMPS Load VA INCAND	LAMPS Load VA H.I.D.	LAMP ORDERING CODE OR OPTIONAL	VOLTAGE	MOUNTING	NOTES
FLX	LINEAR FLEXIBLE LED TUBE LIGHT, MOUNTED ON A RADIUS CURVE	ACCLAIM LIGHTING LIGHT: FTB-123-AAQ-N, OR EQUAL DRIVER: AL DRIVER 800, OR EQUAL DMX CONTROLLER: ART 500, OR EQUAL	(QTY:6) 10m SPOOLS @ 120W PER 10m (QTY:1) @ 840 VA (QTY:1) @ 72 VA	N/A	N/A	N/A	BLUE LED	24 VDC 120 VAC 120 VAC	SURFACE MOUNTED INSIDE NEMA 12 ENCLOSURE	1
E3	LED WALL PACK WITH EMERGENCY BATTERY BACKUP	LUMARK LIGHTING LD-WP-FL-4A-ED-GM-EMLED, OR EQUAL	2-28W	N/A	N/A	N/A	LED	UNIV	SURFACE MOUNTED	
S8	3 ½" X 3 ½" X 8' LONG LINEAR DIRECT LIGHT FIXTURE	A-LIGHT ACCOLADE 3 SERIES #D3-8-O-U-S-T OR EQUAL	4-54W	T5HO (2)				UNIV	SURFACE MOUNTED	

NOTE: REFER TO DWG E-001 FOR LIGHTING FIXTURE SCHEDULE GENERAL NOTES AND REFERENCE NOTES.

KEYNOTE

1. FIXTURE MUST BE UL LISTED AND RATED FOR EXTERIOR APPLICATIONS WITH A MINIMUM RATING OF IP64. FIXTURE MUST BE DIMMABLE. BOTH DRIVER AND DMX CONTROLLER MOUNTED INSIDE NEMA 12 ENCLOSURE.

REV.	DATE		BY	SUB.	APP.
	08.08.16	GENERATOR/LANDSCAPE MODIFICATION BID SET			

DESIGNED BY A. NICHOLS
DRAWN BY W STEBOK
CHECKED BY R. GENATO
APPROVED BY R.JANIK
DATE 08.08.16

OmniTrans Connecting the Community
Governments SANBAG Working Together
SAN BERNARDINO ASSOCIATED GOVERNMENTS

HDR
2280 Market Street
Suite 100
Riverside, Ca 92501-2110

SUBMITTED: _____ PROJECT MANAGER

APPROVED: _____

REGISTERED PROFESSIONAL ENGINEER
RAYMOND I. GENATO
No. E17995
Exp. 12-31-16
ELECTRICAL
STATE OF CALIFORNIA

TRANSIT CENTER

LIGHTING FIXTURE SCHEDULE

CONTRACT NO. IFB 16-1001520
DRAWING NO. E-600A
REVISION
SHEET NO. OF
SCALE NONE

C:\pwworking\sac\d0585\D0181207-E-1205.dwg, E-600A, 8/26/2016 2:55:57 PM, EGUERRER

FEEDER SCHEDULE

MARK	AMPACITY	NO. OF SETS	CONDUCTOR SIZES (AWG or kcmil) PHASE	NEUTRAL	EQ GND	ISO GND	CONDUIT SIZE
2	20	1	3 - # 12	-	1 - # 12	-	1/2"
2Y	20	1	3 - # 12	1 - # 12	1 - # 12	-	1/2"
2N	20	1	3 - # 12	1 - # 8	1 - # 12	1 - # 12	3/4"
3	30	1	3 - # 10	-	1 - # 10	-	3/4"
3Y	30	1	3 - # 10	1 - # 10	1 - # 10	-	3/4"
3N	30	1	3 - # 10	1 - # 6	1 - # 10	1 - # 10	1"
4	40	1	3 - # 8	-	1 - # 10	-	3/4"
4Y	40	1	3 - # 8	1 - # 8	1 - # 10	-	1"
4N	40	1	3 - # 8	1 - # 4	1 - # 10	1 - # 10	1"
5	50	1	3 - # 6	-	1 - # 10	-	1"
5Y	50	1	3 - # 6	1 - # 6	1 - # 10	-	1-1/4"
5N	50	1	3 - # 6	1 - # 3	1 - # 10	1 - # 10	1-1/4"
6	60	1	3 - # 4	-	1 - # 10	-	1"
6Y	60	1	3 - # 4	1 - # 4	1 - # 10	-	1-1/4"
6N	60	1	3 - # 4	1 - # 2	1 - # 10	1 - # 10	1-1/2"
7	70	1	3 - # 4	-	1 - # 8	-	1-1/4"
7Y	70	1	3 - # 4	1 - # 4	1 - # 8	-	1-1/4"
7N	70	1	3 - # 4	1 - # 1/0	1 - # 8	1 - # 8	1-1/2"
8	80	1	3 - # 3	-	1 - # 8	-	1-1/4"
8Y	80	1	3 - # 3	1 - # 3	1 - # 8	-	1-1/4"
8N	80	1	3 - # 3	1 - # 2/0	1 - # 8	1 - # 8	1-1/2"
9	90	1	3 - # 2	-	1 - # 8	-	1-1/4"
9Y	90	1	3 - # 2	1 - # 2	1 - # 8	-	1-1/2"
9N	90	1	3 - # 2	1 - # 2/0	1 - # 8	1 - # 8	2"
10	100	1	3 - # 1	-	1 - # 8	-	1-1/2"
10Y	100	1	3 - # 1	1 - # 1	1 - # 8	-	1-1/2"
10N	100	1	3 - # 1	1 - # 3/0	1 - # 8	1 - # 8	2"
11	110	1	3 - # 1	-	1 - #6	-	1-1/2"
11Y	110	1	3 - # 1	1 - # 1	1 - #6	-	2"
11N	110	1	3 - # 1	1 - # 4/0	1 - #6	1 - #6	2"
12	125	1	3 - # 1/0	-	1 - #6	-	1-1/2"
12Y	125	1	3 - # 1/0	1 - # 1/0	1 - #6	-	2"
12N	125	1	3 - # 1/0	1 - 250	1 - #6	1 - #6	2-1/2"
15	150	1	3 - # 1/0	-	1 - #6	-	1-1/2"
15Y	150	1	3 - # 1/0	1 - # 1/0	1 - #6	-	2"
15N	150	1	3 - # 2/0	1 - 350	1 - #4	1 - #4	2-1/2"
17	175	1	3 - # 2/0	-	1 - #6	-	2"
17Y	175	1	3 - # 2/0	1 - # 2/0	1 - #6	-	2"
17N	175	1	3 - # 3/0	2 - # 2/0	1 - #4	1 - #4	2-1/2"
20	200	1	3 - # 3/0	-	1 - #6	-	2"
20Y	200	1	3 - # 3/0	1 - # 3/0	1 - #6	-	2-1/2"
20N	200	1	3 - # 4/0	2 - # 3/0	1 - #4	1 - #4	3"
22	225	1	3 - # 4/0	-	1 - # 4	-	2"
22Y	225	1	3 - # 4/0	1 - # 4/0	1 - # 4	-	2-1/2"
22N	225	1	3 - 250	2 - # 4/0	1 - # 3	1 - # 3	3"
25	250	1	3 - 250	-	1 - # 4	-	2-1/2"
25Y	250	1	3 - 250	1 - 250	1 - # 4	-	3"
25N	250	1	3 - 300	2 - 250	1 - # 3	1 - # 3	3-1/2"
30	300	1	3 - 350	-	1 - # 4	-	3"
30Y	300	1	3 - 350	1 - 350	1 - # 4	-	3-1/2"
30N	300	1	3 - 400	2 - 350	1 - # 3	1 - # 3	3-1/2"
35	350	1	3 - 500	-	1 - # 3	-	3"
35Y	350	1	3 - 500	1 - 500	1 - # 3	-	3-1/2"
35N	350	2	3 - # 3/0	2 - # 2/0	1 - # 3	1 - # 3	2-1/2"
40	400	1	3 - 500	-	1 - # 3	-	3"
40Y	400	1	3 - 500	1 - 500	1 - # 3	-	3-1/2"
40N	400	2	3 - # 4/0	2 - # 3/0	1 - # 1/0	1 - # 1/0	3"
50	500	2	3 - 250	-	1 - # 2	-	2-1/2"
50Y	500	2	3 - 250	1 - 250	1 - # 2	-	3"
50N	500	2	3 - 300	2 - 250	1 - # 1	1 - # 1	3-1/2"

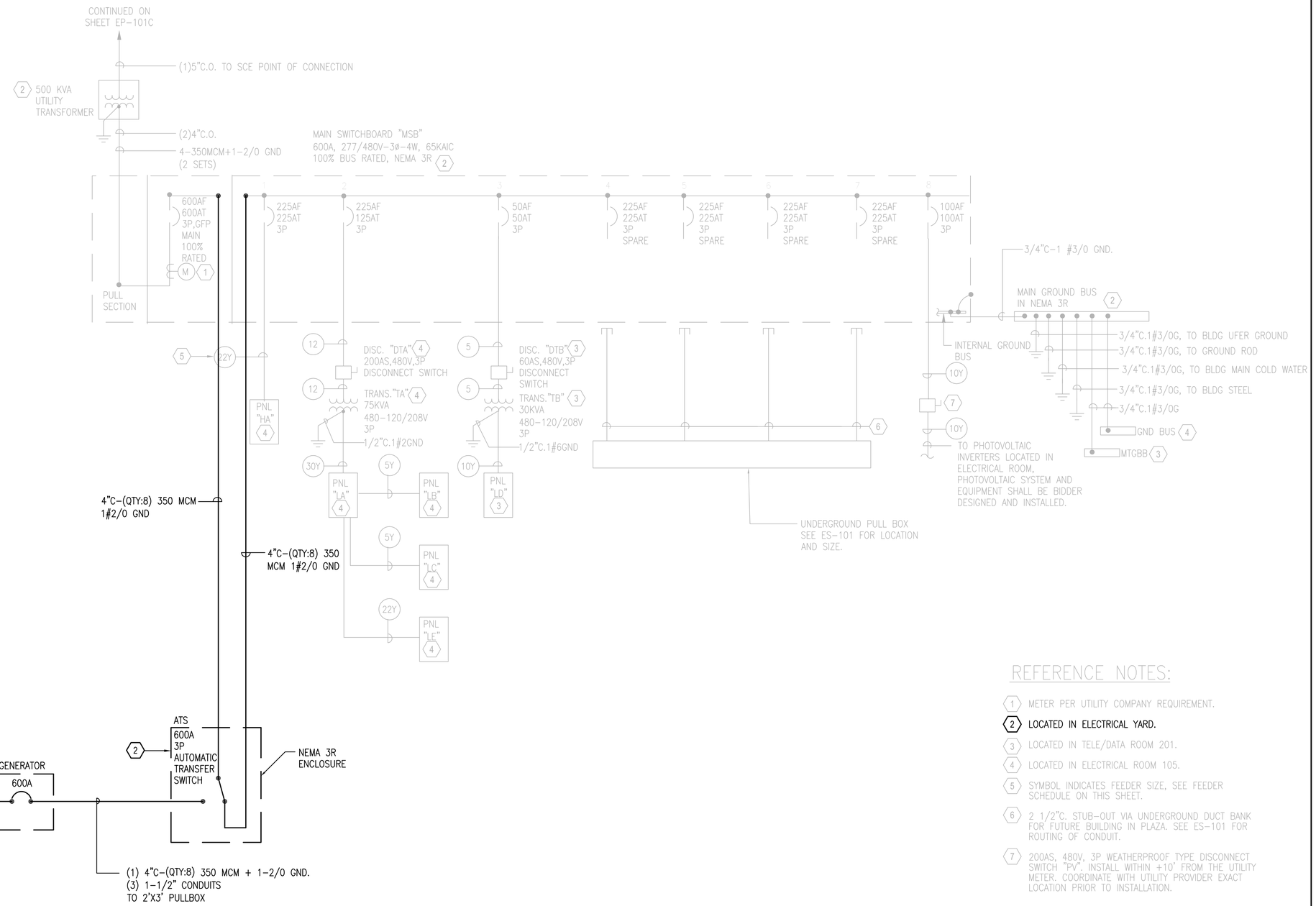

REFERENCE NOTES:

1. METER PER UTILITY COMPANY REQUIREMENT.
2. LOCATED IN ELECTRICAL YARD.
3. LOCATED IN TELE/DATA ROOM 201.
4. LOCATED IN ELECTRICAL ROOM 105.
5. SYMBOL INDICATES FEEDER SIZE, SEE FEEDER SCHEDULE ON THIS SHEET.
6. 2 1/2"C. STUB-OUT VIA UNDERGROUND DUCT BANK FOR FUTURE BUILDING IN PLAZA. SEE ES-101 FOR ROUTING OF CONDUIT.
7. 200AS, 480V, 3P WEATHERPROOF TYPE DISCONNECT SWITCH "PV". INSTALL WITHIN +10' FROM THE UTILITY METER. COORDINATE WITH UTILITY PROVIDER EXACT LOCATION PRIOR TO INSTALLATION.

GENERAL NOTE:

1. SCE PROJECT PLANNER: PHIL WOODS (909) 307-6882

REV.	DATE		BY	SUB.	APP.
	08.08.16	GENERATOR/LANDSCAPE MODIFICATION BID SET			

DESIGNED BY A. NICHOLS
DRAWN BY W STEBOK
CHECKED BY R. GENATO
APPROVED BY R.JANIK
DATE 08.08.16

OmniTrans Connecting Our Communities
Governments SANBAG Working Together
SAN BERNARDINO ASSOCIATED GOVERNMENTS
HDR 2280 Market Street Suite 100 Riverside, Ca 92501-2110
SUBMITTED: PROJECT MANAGER
APPROVED:

REGISTERED PROFESSIONAL ENGINEER RAYMOND I. GENATO No. E17995 Exp. 12-31-16 ELECTRICAL STATE OF CALIFORNIA

TRANSIT CENTER

SINGLE LINE DIAGRAM

CONTRACT NO. IFB 16-1001520
DRAWING NO. E-601
REVISION
SHEET NO. OF
SCALE NONE

C:\pwworking\sac\d0685\258181207-E-1206.dwg, E-601, 8/26/2016 2:39:30 PM, EGUERRER

VOLTAGE 120/208 3ø, 4W.
BUS AMPS 400A
MAIN BREAKER ☒ 400 A.F. 400 A.T.
LUGS ONLY ☐

PANEL LA

LOCATION ELECT. RM. 205
TOP FEED ☐ SURFACE MTG. ☒
BOTTOM FEED ☒ FLUSH MTG. ☐
REMARKS

DESCRIPTION	VOLT-AMPS A	VOLT-AMPS B	VOLT-AMPS C	LCL	OUTLETS L	OUTLETS R	OUTLETS M	CB	CKT	BUS A B C	CKT	CB	OUTLETS L	OUTLETS R	OUTLETS M	LCL	VOLT-AMPS A	VOLT-AMPS B	VOLT-AMPS C	DESCRIPTION
CUSTOMER SERVICE RECEPT.	900					5		20A-1P	1		2	20A-1P		6			1080			RMS 104B,106,106A,107,107A RECEPT
		1080				6			3		4			6				1080		
COPIER			1000			1			5		6			6					1080	
RMS 100,103,109,110,111 RECEPT	900					3			7		8			1		•	1000			DRINKING FOUNTAIN
		900				4			9		10			4				720		BREAK ROOM RECEPTACLES
DRINKING FOUNTAIN			1000	•			1		11		12			5					900	
SECURITY CENTER RECEPT.	900					3			13		14									
		900				1			15		16			1				1200		GARBAGE DISPOSAL
			900			3			17		18			1					1500	MICROWAVE
AUTO DOOR	1000						2		19		20			1			1500			ICE MAKER
		1000					2		21		22			1	1			1500		REFRIGERATOR
PRINTER/FAX AMCH RM 107B			1000			1			23		24			5					900	RM 102 RECEPTACLES
LIGHTING CONTROL PANEL "LCP"	300					1			25		26			2	1		1680			VENDING MACHINES
SPARE									27		28			2	1			1680		
ROOF RECEPTACLES			180			1			29		30				1					CIRCULATING PUMP
PANEL "LE"	10960						1	225A-3P	31		32	50A-3P			1		1498			PANEL "LC"
–		11181					–	–	33		34	–			1			801		–
–			6710					–	35		36	–			1				1449	
PANEL "LB"	1217						1	50A-3P	37		38	100A-3P								SPARE
–		1367					–	–	39		40	–								–
–			886				–	–	41		42	–								–
SUB TOTALS	16177	16428	11676														6758	6981	5829	SUB TOTALS

CONN. PHASE TOTAL: A 22935 B 23409 C 17505 ; CONN. PANEL TOTAL 63849 VA; MAX. CONN. LINE CURRENT 177 AMPS

(KVA) PANEL TOTAL 63.8 + L.C.L. (.25) 2.1 = 65.9 KVA; BALANCED CURRENT 183 AMPS; DESIGN LOAD _____ KVA

MAIN SWITCHBOARD "MSB" LOCATION ELECTRICAL YARD

CKT. NO.	EQUIPMENT	KVA	DEMAND	FLA	REMARKS
1	PNL. HA	145.0		174.4	
2	PNL. LA VIA XFMR TA	65.9		183.0	
3	PNL. LD VIA XFMR TB	24.5		68.2	
4	SPARE				
5					
6					
7					
8	PV SYSTEM				
SUB-TOTALS		235.4		425.6	
25% OF LARGEST MOTOR		13.5		16.2	
TOTALS		248.9		441.8	

VOLTAGE 120/208 3ø, 4W.
BUS AMPS 100A
MAIN BREAKER ☐ A.F. A.T.
LUGS ONLY ☒

PANEL LB

LOCATION ELECT. RM. 105
TOP FEED ☒ SURFACE MTG. ☒
BOTTOM FEED ☐ FLUSH MTG. ☐
REMARKS

DESCRIPTION	VOLT-AMPS A	VOLT-AMPS B	VOLT-AMPS C	LCL	OUTLETS L	OUTLETS R	OUTLETS M	CB	CKT	BUS A B C	CKT	CB	OUTLETS L	OUTLETS R	OUTLETS M	LCL	VOLT-AMPS A	VOLT-AMPS B	VOLT-AMPS C	DESCRIPTION
FCU-1A	59						1	15A-2P	1		2	15A-2P			1		20			BC-1
–		59					–	–	3		4	–			–			20		–
FCU-1B			239				1	15A-2P	5		6	15A-2P			1				20	BC-2
–	239						–	–	7		8	–			–		20			–
FCU-2A		21					1	15A-2P	9		10	15A-2P			1			40		BC-4
–			21				–	–	11		12	–			–				40	–
FCU-2B	59						1	15A-2P	13		14	15A-2P			1		40			BC-5
–		59					–	–	15		16	–			–			40		–
FCU-3A			21				1	15A-2P	17		18	15A-2P			1				40	BC-3
–	21						–	–	19		20	–			–		40			–
FCU-3B		21					1	15A-2P	21		22	15A-2P			1			40		BC-6
–			21				–	–	23		24	–			–				40	–
FCU-4	468						1	15A-2P	25		26	15A-2P								SPARE
–		468					–	–	27		28	–								–
ERV-1							1	15A-2P	29		30	15A-2P			1				21	FCU-10
–							–	–	31		32	–			–		21			–
FCU-11		239					1	15A-2P	33		34	20A-1P						360		SECURITY CENTER RECEPTACLE
–			239				–	–	35		36								100	WFI (5) CONNECTIONS
ERV-2							1	15A-2P	37		38						230			MASTER CONTROL PANEL (MCP-1)
–							–	–	39		40									
EMERGENCY PHONE			84					20-1P	41		42									
SUB TOTALS	846	867	625														371	500	261	SUB TOTALS

CONN. PHASE TOTAL: A 1217 B 1367 C 886 ; CONN. PANEL TOTAL 3470 VA; MAX. CONN. LINE CURRENT 9.6 AMPS

(KVA) PANEL TOTAL 3.5 + L.C.L. (.25) 0.00 = 3.5 KVA; BALANCED CURRENT 9.6 AMPS; DESIGN LOAD _____ KVA

VOLTAGE 277/480 3ø, 4W.
BUS AMPS 225
MAIN BREAKER ☐ 225 A.F. 225 A.T.
LUGS ONLY ☒

PANEL HA

LOCATION ELECT. RM. 105
TOP FEED ☐ SURFACE MTG. ☒
BOTTOM FEED ☒ FLUSH MTG. ☐
REMARKS

DESCRIPTION	VOLT-AMPS A	VOLT-AMPS B	VOLT-AMPS C	LCL	OUTLETS L	OUTLETS R	OUTLETS M	CB	CKT	BUS A B C	CKT	CB	OUTLETS L	OUTLETS R	OUTLETS M	LCL	VOLT-AMPS A	VOLT-AMPS B	VOLT-AMPS C	DESCRIPTION
BUSWAY LIGHTING	1400			∘	8			20A-1P	1		2	20A-1P	14			∘	1596			TOD PLAZA LIGHTING
BUSWAY LIGHTING		1600		∘	9				3		4		57			∘		2255		INTERIOR LIGHTING
INTERIOR EMERGENCY LIGHTING			1147	∘	26				5		6		28			∘			1352	INTERIOR LIGHTING
SPARE									7		8		19			∘	1440			INTERIOR LIGHTING
									9		10		20			∘		2340		UNDERCANOPY LIGHTING
									11		12		20			∘			2340	UNDERCANOPY LIGHTING
ELECTRICAL VEHICLE CHARGING STATION (FUTURE)	18013								13		14									SPARE
		18013							15		16									
			18013						17		18									
SPARE									19		20									
									21		22									
									23		24									
									25		26	40A-3P			1		7645			CU-1 MODULE 1
									27		28	–			–			7645		–
									29		30	–			–				7645	–
SF-1	943						1	20A/3P	31		32	40A-3P			1		7645			CU-1 MODULE 2
–		943					–	–	33		34	–			–			7645		–
–			943				–	–	35		36	–			–				7645	–
SPARE								20A/3P	37		38	40A-3P			1		7645			CU-1 MODULE 3
–								–	39		40	–			–			7645		–
–								–	41		42	–			–				7645	–
SUB TOTALS	20356	20556	19923														25971	27530	26627	SUB TOTALS

CONN. PHASE TOTAL: A 46327 B 48086 C 46730 ; CONN. PANEL TOTAL 141143 VA; MAX. CONN. LINE CURRENT 169.8 AMPS

(KVA) PANEL TOTAL 141.14 + L.C.L. (.25) 3.87 = 145.01 KVA; BALANCED CURRENT 174.4 AMPS; DESIGN LOAD _____ KVA

REFERENCE NOTES:

(1) ROUTE CIRCUIT VIA LIGHTING CONTROL PANEL "LCP"

LA	MSB
LB	HA

REV.	DATE		BY	SUB.	APP.
	08.08.16	GENERATOR/LANDSCAPE MODIFICATION BID SET	RG		RJ

DESIGNED BY A. NICHOLS
DRAWN BY W STEBOK
CHECKED BY R. GENATO
APPROVED BY R.JANIK
DATE 08.08.16

OmniTrans
Governments SANBAG Working Together
SAN BERNARDINO ASSOCIATED GOVERNMENTS

HDR
2280 Market Street
Suite 100
Riverside, Ca 92501-2110

SUBMITTED: _____ PROJECT MANAGER
APPROVED: _____

REGISTERED PROFESSIONAL ENGINEER
RAYMOND I. GENATO
No. E17995
Exp. 12-31-16
ELECTRICAL
STATE OF CALIFORNIA

TRANSIT CENTER

PANEL SCHEDULES

CONTRACT NO. IFB 16-1001520
DRAWING NO. E-701
REVISION
SHEET NO. OF
SCALE NONE

C:\pwworking\sac\d0885258\B1812070-E-1207.dwg, E-701, 8/26/2016 3:05:35 PM, EGUEERRER

VOLTAGE 120/208 3ø, 4W.
BUS AMPS 225A
MAIN BREAKER ☐ A.F. ____ A.T.
LUGS ONLY ☒

PANEL LE

LOCATION ELECT. RM. 105
TOP FEED ☒ SURFACE MTG. ☒
BOTTOM FEED ☐ FLUSH MTG. ☐
REMARKS

	DESCRIPTION	VOLT-AMPS A	VOLT-AMPS B	VOLT-AMPS C	LCL	OUTLETS L	OUTLETS R	OUTLETS M	CB	CKT	BUS A B C	CKT	CB	OUTLETS L	OUTLETS R	OUTLETS M	LCL	VOLT-AMPS A	VOLT-AMPS B	VOLT-AMPS C	DESCRIPTION	
1	WEST PLAZA LIGHTING	368			∘	8			20A-1P	1		2	40A-2P			1		4000			FOUNTAIN POWER SUPPLY	1
	↓		159		∘	11				3		4	–			–			4000		–	
	MONUMENT LIGHTING			1000	∘			1		5		6	20A-1P			1				500	FIRE ALARM PANEL	
	↓	1000			∘			1		7		8									SPARE	
	HAND DRYER/MEN'S		1000					2		9		10			2				360		TV MONITORS	
	AUTO FAUCET/WATER CLOSET			600				12		11		12	↓		2					360	↓	
	HAND DRYER	1000						2		13		14	30A-1P			1		500			TVM	
	AUTO FAUCET/WATER CLOSET		400					8		15		16	20A-1P								SPARE	
	MENS/WOMENS RECEPS			720			4			17		18		20			∘			360	INGRADE UPLIGHT	1
	OUTDOOR RECEPS	540					3			19		20				1	∘	1000			FOUNTAIN LIGHT	
	OUTDOOR RECEPS		540				3			21		22		10		7	∘		1422		BUS SHELTER SIGNAGE AND LTG	
	LOBBY FLOOR RECEPS			720			4			23		24				17				850	SITE SECURITY CAMERAS	
	LOBBY FLOOR RECEPS	720					4			25		26		2		2	∘	312			BUS SHELTER SIGNAGE AND LTG	
	FIRE RATED COILING DOOR		1500					1		27		28				16			800		SITE SECURITY CAMERAS	
	MOTORIZED SHADES			500				1		29		30								100	RLDS	
	MOTORIZED SHADES	500						1		31		32						20			EMERGENCY PHONE	
	MOTORIZED SHADES		500					1		33		34										
	MOTORIZED SHADES			500				1		35		36										
	HAND DRYER/WOMEN'S	1000						1	↓	37		38										
	TVM (FUT)		500					1	30A-1P	39		40										
	TVM (FUT)			500				1	30A-1P	41		42	↓								↓	
	SUB TOTALS	5128	4599	4540														5832	6582	2170	SUB TOTALS	

CONN. PHASE TOTAL: A 10960 B 11181 C 6710 ; CONN. PANEL TOTAL 28851 VA; MAX. CONN. LINE CURRENT 80.1 AMPS

(KVA) PANEL TOTAL 28.85 + L.C.L. (,25) 1.52 = 30.37 KVA; BALANCED CURRENT 84.3 AMPS; DESIGN LOAD ____ KVA

VOLTAGE 120/208 3ø, 4W.
BUS AMPS 100A
MAIN BREAKER ☐ A.F. ____ A.T.
LUGS ONLY ☒

PANEL LC

LOCATION ELECT. RM. 105
TOP FEED ☒ SURFACE MTG. ☒
BOTTOM FEED ☐ FLUSH MTG. ☐
REMARKS

DESCRIPTION	VOLT-AMPS A	VOLT-AMPS B	VOLT-AMPS C	LCL	OUTLETS L	OUTLETS R	OUTLETS M	CB	CKT	BUS A B C	CKT	CB	OUTLETS L	OUTLETS R	OUTLETS M	LCL	VOLT-AMPS A	VOLT-AMPS B	VOLT-AMPS C	DESCRIPTION
FCU-6	31							15A-2P	1		2	15A-2P								SPARE
–		31						–	3		4	–								–
FCU-5A			21				1	15A-2P	5		6	15A-2P			1				16	FCU-9A
–	21						–	–	7		8	–			–		16			–
FCU-5B		21					1	15A-2P	9		10	15A-2P			1			16		FCU-9B
–			21				–	–	11		12	–			–				16	–
FCU-1C	239						1	15A-2P	13		14	15A-2P			1		16			FCU-8A
–		239					–	–	15		16	–			–			16		–
FCU-8C			468				1	15A-2P	17		18	15A-2P			1				468	FCU-8B
–	468						–	–	19		20	–			–		468			–
FCU-7		239					1	15A-2P	21		22	15A-2P								SPARE
–			239				–	–	23		24	–								–
FCU-7 CONDENSATE PUMP	239							15A-2P	25		26	20A-1P								SPARE
–		239						–	27		28									
BMS CONTROL			200					20A-1P	29		30									
SPARE								20A-1P	31		32									
									33		34									
									35		36									
									37		38									
									39		40									
								↓	41		42	↓								↓
SUB TOTALS	998	769	949														500	32	500	SUB TOTALS

CONN. PHASE TOTAL: A 1498 B 801 C 1449 ; CONN. PANEL TOTAL 3748 VA; MAX. CONN. LINE CURRENT 10.4 AMPS

(KVA) PANEL TOTAL 3.75 + L.C.L. (,25) 0.00 = 3.75 KVA; BALANCED CURRENT 10.4 AMPS; DESIGN LOAD ____ KVA

VOLTAGE 120/208 3ø, 4W.
BUS AMPS 100
MAIN BREAKER ☒ 100 A.F. 100 A.T.
LUGS ONLY ☐

PANEL LD

LOCATION TELE/DATA ROOM
TOP FEED ☐ SURFACE MTG. ☒
BOTTOM FEED ☒ FLUSH MTG. ☐
REMARKS

	DESCRIPTION	VOLT-AMPS A	VOLT-AMPS B	VOLT-AMPS C	LCL	OUTLETS L	OUTLETS R	OUTLETS M	CB	CKT	BUS A B C	CKT	CB	OUTLETS L	OUTLETS R	OUTLETS M	LCL	VOLT-AMPS A	VOLT-AMPS B	VOLT-AMPS C	DESCRIPTION
	OUTDOOR RECEPTACLES EAST	900					5		20A-1P	1		2	15A-2P			1	Y	31			FCU-12A
	↓		900				5			3		4	–			–			31		–
	CART/SCOOTER CHARGING STATION			500			1			5		6	15A-2P			1	Y			31	FCU-12B
	OUTDOOR RECEPTACLES NORTH	540					1			7		8	–			–		31			–
	↓		360				1			9		10	30A-2P			1	Y		1976		CU-12A
	IRRIGATION CONTROLLER			500	Y		1			11		12				–				1976	–
	SPARE									13		14	30A-2P			1	Y	1976			CU-12B
	SPARE									15		16	–			–			1976		–
1	PEABLE FOUNTAIN			1200	Y		1			17		18	15A-2P								SPARE
	SITE RECEPTACLES	540					3			19		20	–								–
	SITE RECEPTACLES		360				3			21		22	20A-1P		1		Y		360		LOW VOLTAGE EQUIP, RACK
	WATER FIXTURE			3	Y					23		24			1		Y			360	
	GEN BATT CHARGER	1000			Y					25		26			1		Y	360			
	GENERATOR HEATER		1250		Y				20A-2P	27		28			1		Y		360		↓
	GENERATOR HEATER			1250	Y				–	29		30				3	Y			150	SITE SECURITY CAMERAS
	IRRIGATION CONTROLLER	500			Y				20A-1P	31		32					Y	300			FACP
										33		34					Y		56		GENERATOR EMERGENCY LIGHT
										35		36					Y			1200	GENERATOR LCP
										37		38									
										39		40									
	↓								↓	41		42	↓								↓
	SUB TOTALS	3480	2870	3453														2698	4759	3717	SUB TOTALS

CONN. PHASE TOTAL: A 6178 B 7629 C 7170 ; CONN. PANEL TOTAL 20977 VA; MAX. CONN. LINE CURRENT 58.2 AMPS

(KVA) PANEL TOTAL 20.97 + L.C.L. (,25) 4.22 = 25.19 KVA; BALANCED CURRENT 69.9 AMPS; DESIGN LOAD ____ KVA

REFERENCE NOTES:

1 ROUTE CIRCUIT VIA LIGHTING CONTROL PANEL "LCP"

REV.	DATE		BY	SUB.	APP.
	08.08.16	GENERATOR/LANDSCAPE MODIFICATION BID SET			

DESIGNED BY A. NICHOLS
DRAWN BY W STEBOK
CHECKED BY R. GENATO
APPROVED BY R.JANIK
DATE 08.08.16

OmniTrans Connecting Our Communities
Governments SANBAG Working Together
SAN BERNARDINO ASSOCIATED GOVERNMENTS

HDR
2280 Market Street
Suite 100
Riverside, Ca 92501-2110

SUBMITTED: ____ PROJECT MANAGER
APPROVED: ____

REGISTERED PROFESSIONAL ENGINEER
RAYMOND I. GENATO
No. E17995
Exp. 12-31-16
ELECTRICAL
STATE OF CALIFORNIA

TRANSIT CENTER

PANEL SCHEDULES

CONTRACT NO. IFB 16-1001520
DRAWING NO. E-702
REVISION
SHEET NO. OF
SCALE NONE

C:\pwworking\sac\d0585258\B1810\7-E-1208.dwg, E-702, 8/26/2016 3:06:46 PM, EQUEERER

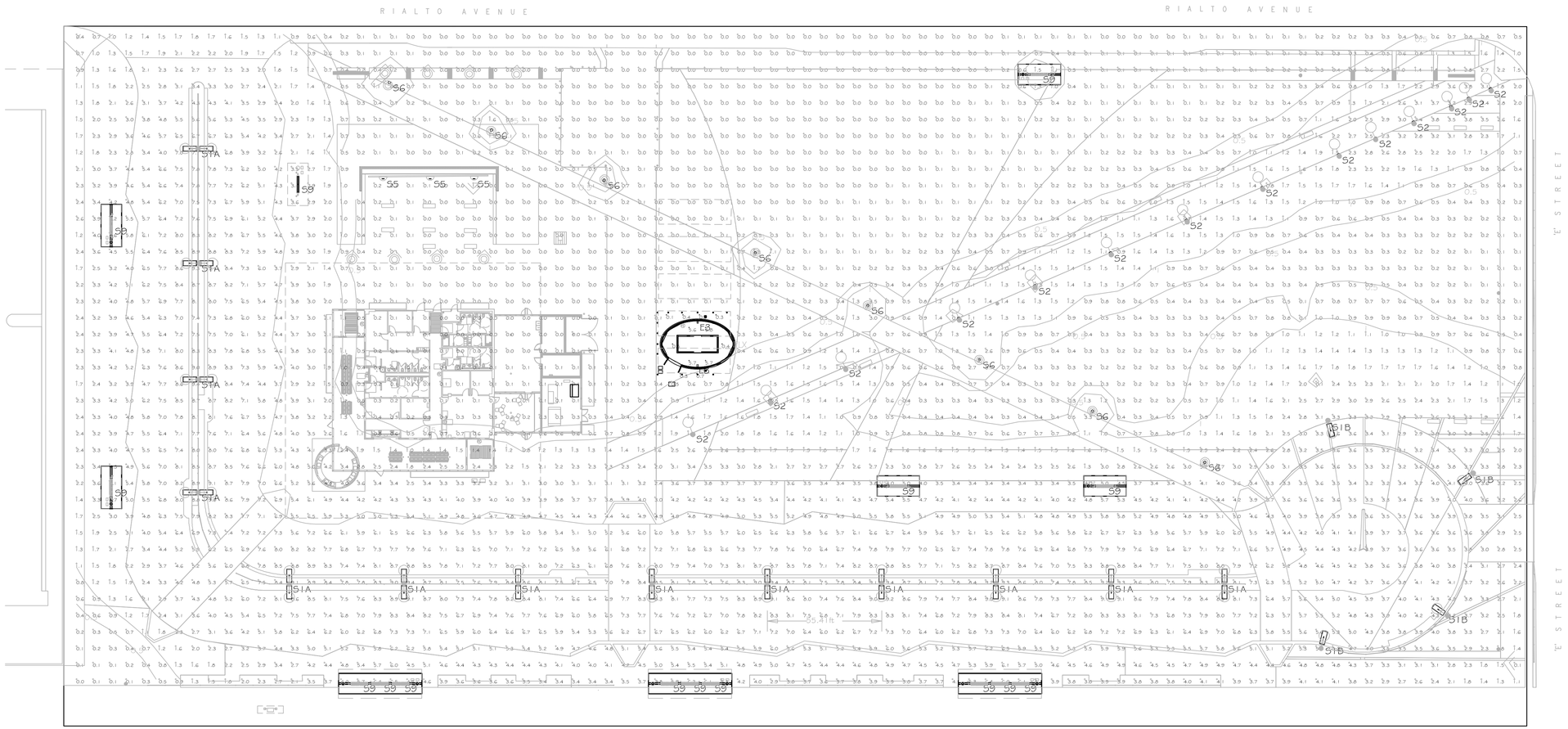

DISCLAIMER: This calculation, either normal lighting or emergency lighting, is based on the information provided to CLS by the architect, engineer, lighting designer, contractor, etc.. These findings should be verified by a certified electrical engineer as to their accuracy. Design changes such as ceiling heights, ceiling, wall and floor reflectances of all interior surfaces including partition walls may adversly affect the overall light levels. CLS is not responsible as to the veracity of these calculations, and should only be used as a design reference tool and are only an approximation.

Luminaire Schedule

Symbol	Qty	Label	Arrangement	Total Lamp Lumens	LLF	Description
	13	91A	91.50	N.A.	0.900	RX21G015C4SRN5N - QUADRILATERALLY SYMMETRIC, Pole Mounted Fixture @ 25' AFG
	4	51B	SINGLE	N.A.	0.900	RX21G015C4SRN5N - QUADRILATERALLY SYMMETRIC, Pole Mounted Fixture @ 25' AFG
	14	52	SINGLE	12000	0.510	MTRT116-410, Column @ 16' AFG
	6	56	SINGLE	3200	0.510	BRMP 4 F42 (using ies file for quasistimate > BRM-1-H100 (MTR Bollard Round)
	3	55	SINGLE	132.3	0.900	LM31005L, Steplight @ 8IN AFG
	14	59	SINGLE	5000	0.810	5FM105, Linear fluorescent Surface Mount Indirect @ 8FT-6IN AFG
	2	E3	SINGLE	2297	0.700	White LED
	168'	FLX	CONTINUOUS LENGTH	45 lumens/FT	0.700	Blue LED

ELECTRICAL SITE PLAN 1 ES-801

1"=30'-0"

30' 0 30' 60'

1"=30'-0"

N

REV.	DATE		BY	SUB	APP.
	08.08.16	GENERATOR/LANDSCAPE MODIFICATION BID SET			

DESIGNED BY A. NICHOLS
DRAWN BY W STEBOK
CHECKED BY R. GENATO
APPROVED BY R.JANIK
DATE 08.08.16

OmniTrans Connecting Our Communities
Governments SANBAG Working Together
SAN BERNARDINO ASSOCIATED GOVERNMENTS

HDR
2280 Market Street
Suite 100
Riverside, Ca 92501-2110

SUBMITTED: _____ PROJECT MANAGER

APPROVED: _____

REGISTERED PROFESSIONAL ENGINEER RAYMOND T. GENATO No. E17995 Exp. 12-31-16 ELECTRICAL STATE OF CALIFORNIA

TRANSIT CENTER

PHOTOMETRIC PLAN FOR SBTC SITE

CONTRACT NO. IFB 16-1001520
DRAWING NO. ES-801
REVISION
SHEET NO. OF
SCALE 1/2"=1'-0"

C:\pwworking\sac\d0889\D2818\207-E-1801.dwg, ES-801, 8/26/2016 3:07:50 PM, EQUERRER

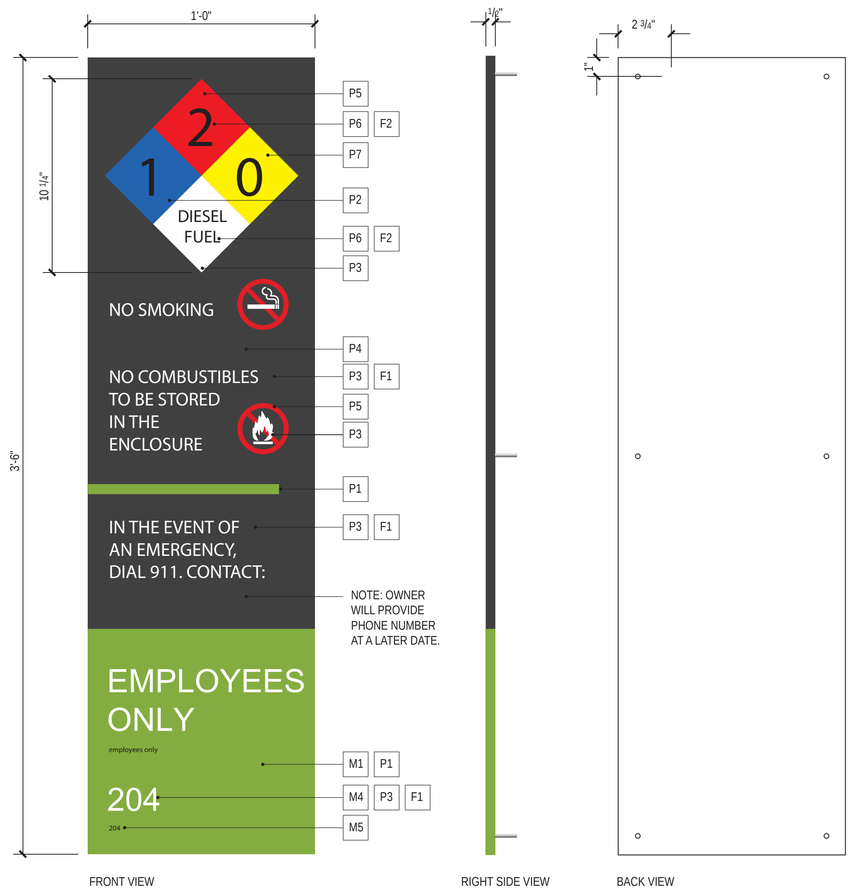

1 RIDX - ROOM ID EXTRA LARGE

SCALE: 25%

ABCDEFGHIJKLMNOPQRSTUVWXYZ
abcdefghijklmnopqrstuvwxyz 0123456789

F2

Helvetica Medium

ABCDEFGHIJKLMNOPQRSTUVWXYZ
abcdefghijklmnopqrstuvwxyz 0123456789

F1

DIN Medium

2 FONTS

P1	P2	P3	P4	P5	P6	P7
OmniTrans Green	OmniTrans Blue	White	90% Gray	Safety Red	Black	Safety Yellow
R=131 G=187 B=65	R=32 G=98 B=176					

3 PAINT COLORS

M1	M4	M5
Acrylic	Photopolymer Tactile Letter or Number	Photopolymer Grade 2 Braille

4 MATERIALS

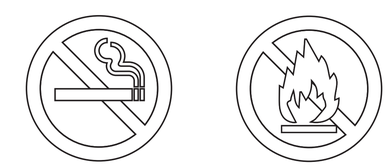

No Smoking

No Combustibles

5 ICONS

REV.	DATE		BY	SUB.	APP.
	08.08.16	GENERATOR AND SITE FENCE BID SET			

DESIGNED BY J.ZOLL
DRAWN BY M.GASWAY
CHECKED BY E.GUERRERO
APPROVED BY R.JANIK
DATE 8.08.16

OmniTrans — Connecting Our Communities
Governments SANBAG Working Together
SAN BERNARDINO ASSOCIATED GOVERNMENTS

HDR
801 S. GRAND AVENUE
Suite 500
Los Angeles, Ca 90017-4633

NOT FOR CONSTRUCTION

SUBMITTED: _____ PROJECT MANAGER

APPROVED: _____

TRANSIT CENTER

EXTERIOR SIGNAGE DETAILS

CONTRACT NO. IFB 16-1001520
DRAWING NO. AG-100
REVISION
SHEET NO. OF
SCALE

C:\pwworking\sac\d0704755\18\207-AG-100.dwg, AG-500, 8/26/2016 1:31:12 PM, EGUERRER

VIDEO SURVEILLANCE AND INSTALLATION NOTES:

1. THE VIDEO SURVEILLANCE SYSTEM IS AN IP BASED DIGITAL VIDEO SURVEILLANCE SYSTEM USING CAT-6 INFRASTRUCTURE.
2. ALL EQUIPMENT SHALL BE INSTALLED AS REQUIRED FROM MANUFACTURER'S RECOMMENDATIONS.
3. THE CONTRACTOR SHALL FURNISH AND INSTALL ALL REQUIRED BRACKETS AND HARDWARE TO INSTALL THE EQUIPMENT AS SPECIFIED AND REQUIRED BY THE MANUFACTURER'S SPECIFICATIONS AND CONTRACT DRAWINGS.
4. CONTRACTOR SHALL INSTALL CABLES IN A WAY TO MINIMIZE VISUAL IMPACT.
5. CAMERAS SHALL BE INSTALLED AT A 10' MINIMUM CLEARANCE TO PREVENT INTERFERENCE AND/OR TAMPERING.
6. THE CAMERAS SHALL BE INSTALLED SUITABLE TO THE ENVIRONMENTAL CONDITIONS OF THE LOCATION.
7. ALL WIRING SHALL BE INSTALLED ACCORDING TO THE LATEST REVISION OF THE NATIONAL ELECTRICAL CODES.
8. ALL CONDUCTORS MUST BE TESTED AND BE FREE OF DEFECTS, OPEN, SHORTS AND GROUNDS. WRITTEN DOCUMENTATION OF THIS TESTING SHALL BE PROVIDED TO THE CUSTOMER.
9. GROUNDING MUST COMPLY WITH THE NATIONAL ELECTRICAL CODE. GROUNDING CONDUCTOR MUST BE #10AWG SINGLE CONDUCTOR UNLESS OTHERWISE NOTED.
10. WHEN CABLE LENGTH WILL BE MORE THAN 300 FEET, CAMERAS SHALL BE INDIVIDUALLY CABLED USING FIBER OPTIC AND APPROPRIATE MEDIA CONVERTERS.
11. FINAL CONFIGURATION, DIRECTION AND FIELD OF VIEW (FOV) OF EACH CAMERA SHALL BE COORDINATED WITH THE CUSTOMER.
12. CONNECTORS: ALL CAT6 SHALL USE RJ45 CONNECTORS UNLESS OTHERWISE NOTED.

M= CAMERA INSTALLATION AND MOUNTING NOTES:

CAMERA MOUNTED TO INTERIOR OR EXTERIOR WALL:

A. POWER – PoE
B. WIRING – CAT6 RUN TO LOCATION SHOWN ON WIRING DETAIL DRAWINGS.

SYMBOL LEGEND:

FIXED CAMERA

REV.	DATE		BY / SUB.	APP.
	08.08.16	GENERATOR/LANDSCAPE MODIFICATION BID SET		

PAC ENGINEERING

DESIGNED BY G. PINEDA
DRAWN BY C. CLAYTOR
CHECKED BY GP
APPROVED BY GP
DATE 08.08.16

OmniTrans — Connecting Our Communities
Governments SANBAG Working Together — SAN BERNARDINO ASSOCIATED GOVERNMENTS

FDR
2280 Market Street
Suite 100
Riverside, Ca 92501-2110

SUBMITTED: _____ PROJECT MANAGER

ISSUED FOR CONSTRUCTION

APPROVED: _____

TRANSIT CENTER

SECURITY CAMERA SYSTEM
GENERAL NOTES

CONTRACT NO. IFB 16-1001520
DRAWING NO. TY-001
REVISION
SHEET NO. 34 OF 38
SCALE NA

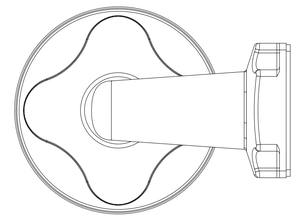

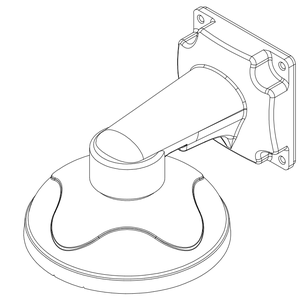

MOUNT WITH CAMERA

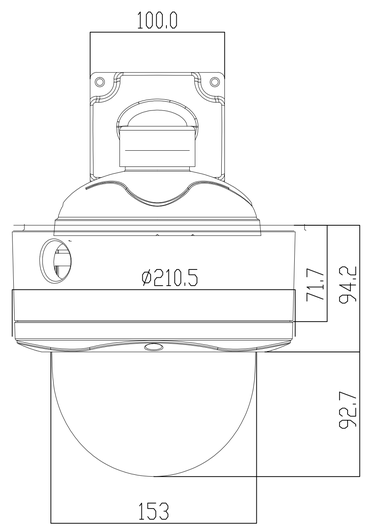

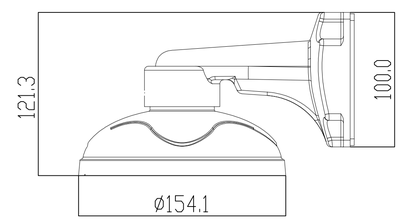

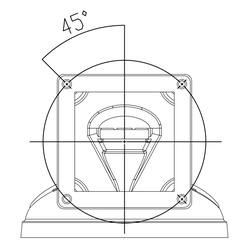

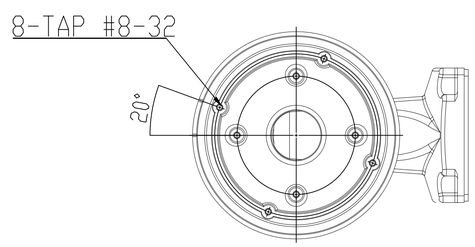

NOTE: MEASUREMENTS ARE METRIC

REV.	DATE		BY / SUB.	APP.
	08.08.16	GENERATOR/LANDSCAPE MODIFICATION PERMIT SET		

PAC ENGINEERING

DESIGNED BY	G. PINEDA
DRAWN BY	C. CLAYTOR
CHECKED BY	GP
APPROVED BY	GP
DATE	08.08.16

OmniTrans — Connecting Our Communities

Governments SANBAG Working Together — SAN BERNARDINO ASSOCIATED GOVERNMENTS

FDR — 2280 Market Street, Suite 100, Riverside, Ca 92501-2110

SUBMITTED: _____ PROJECT MANAGER

ISSUED FOR CONSTRUCTION

APPROVED: _____

TRANSIT CENTER

SECURITY CAMERA SYSTEM
MOUNTING DIAGRAMS

CONTRACT NO.	IFB 16-1001520
DRAWING NO.	TY-002
REVISION	
SHEET NO.	35 OF 38
SCALE	NA

GENERAL NOTES:

1. GENSET CAMERAS 27 & 28 CONNECT TO EXISTING POE SWITCH
2. EXISTING VMS MUST HAVE STORAGE CAPACITY TO MEET STORAGE REQUIREMENTS OF OMNITRANS WITH THE ADDITION OF 2 MORE CAMERAS. IF NOT, ADDITIONAL STORAGE MUST BE ADDED TO VMS.
3. REFER TO SPECIFICATION DOCUMENT 28.23.00 VIDEO SURVEILLANCE.
4. REFERENCE DRAWING EC-101 FOR SIGNAL CONDUIT AND J BOXES
5. COORDINATE ALL CONDUIT WITH ELECTRICAL.

REFERENCE NOTES:

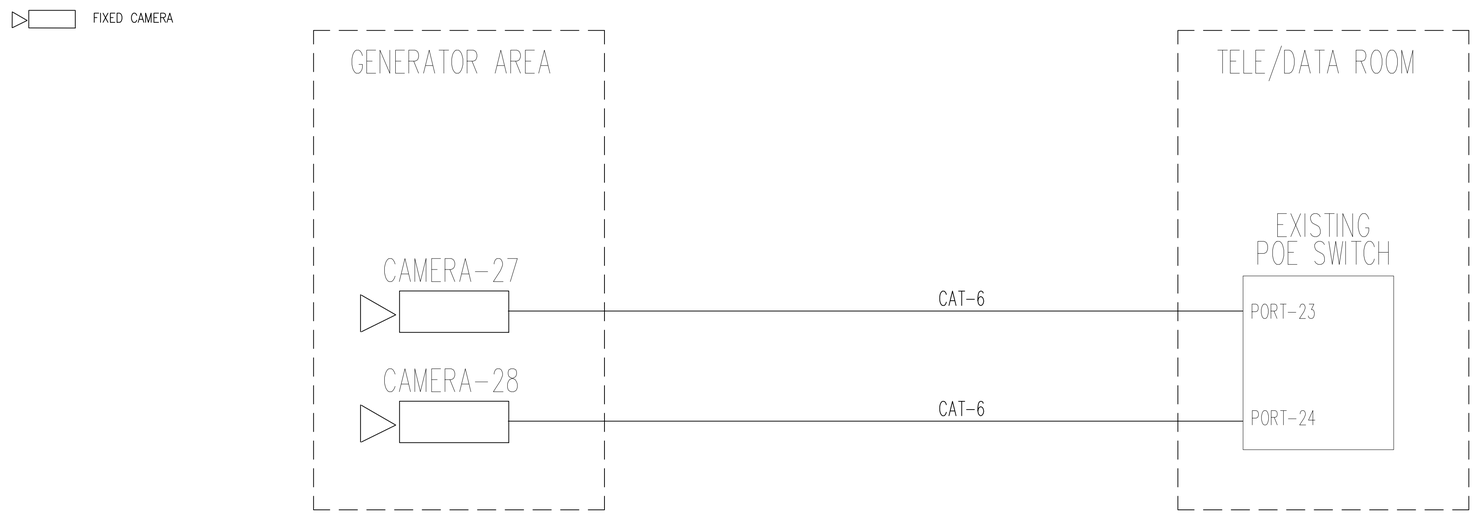

REV.	DATE		BY / SUB	APP.
	08.08.16	GENERATOR/LANDSCAPE MODIFICATION PERMIT SET		

PAC ENGINEERING

DESIGNED BY G. PINEDA
DRAWN BY C. CLAYTOR
CHECKED BY GP
APPROVED BY GP
DATE 08.08.16

OmniTrans Connecting the Community
Governments SANBAG Working Together
SAN BERNARDINO ASSOCIATED GOVERNMENTS

HDR
2280 Market Street
Suite 100
Riverside, Ca 92501-2110

ISSUED FOR CONSTRUCTION

SUBMITTED: _____ PROJECT MANAGER

APPROVED: _____

TRANSIT CENTER

SECURITY CAMERA SYSTEM
SINGLE LINE

CONTRACT NO. IFB 16-1001520
DRAWING NO. TY-101
REVISION
SHEET NO. 36 OF 38
SCALE NA

GENERAL NOTES:

1. COORDINATE EXACT LOCATION OF CAMERAS WITH CUSTOMER.
2. REFERENCE DRAWING EC-101 FOR SIGNAL CONDUIT AND J BOXES

REFERENCE NOTES:

FIXED CAMERA, WALL MOUNT

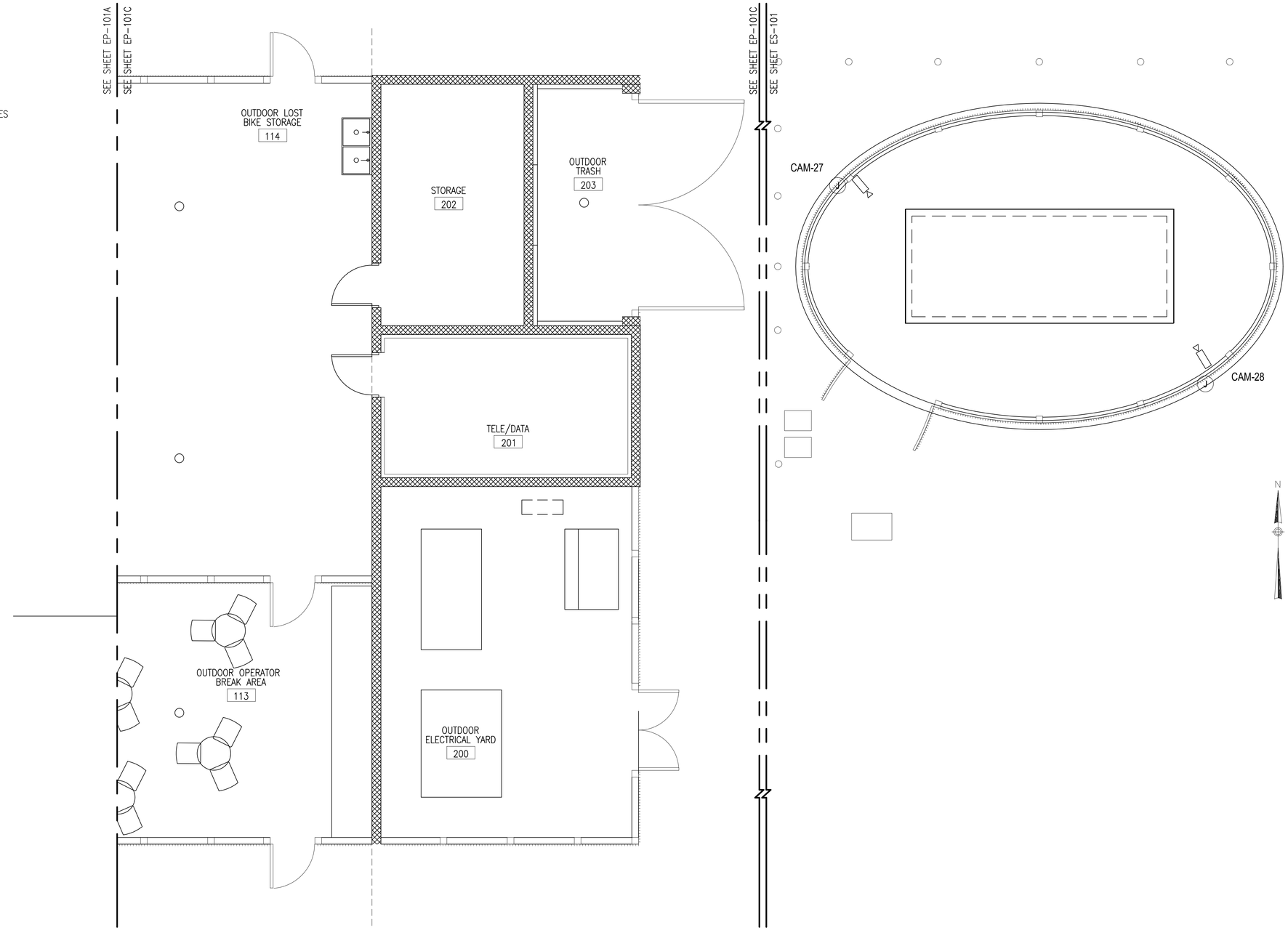

FLOOR PLAN – AREA "C"
1/4"=1'-0"

1
EP-101C

REV.	DATE		BY	SUB.	APP.
	08.08.16	GENERATOR/LANDSCAPE MODIFICATION PERMIT SET			

PAC ENGINEERING

DESIGNED BY G. PINEDA
DRAWN BY C. CLAYTOR
CHECKED BY GP
APPROVED BY GP
DATE 08.08.16

OmniTrans
Governments SANBAG Working Together
SAN BERNARDINO ASSOCIATED GOVERNMENTS

HDR
2280 Market Street
Suite 100
Riverside, Ca 92501-2110

SUBMITTED: _____ PROJECT MANAGER

ISSUED FOR CONSTRUCTION

APPROVED: _____

TRANSIT CENTER

SECURITY CAMERA SYSTEM LAYOUT

CONTRACT NO. IFB 16-1001520
DRAWING NO. TY-201
REVISION
SHEET NO. 37 OF 38
SCALE 1/4" = 1'-0"

GENERAL NOTES:

1. COORDINATE EXACT LOCATION OF CAMERAS WITH CUSTOMER.
2. REFERENCE DRAWING EC-101 FOR SIGNAL CONDUIT AND J BOXES
3. CAMERA DETAIL:
   - 3.1. HORIZONAL PIXEL DENSITY (HPD) = 109 PIXELS PER FOOT (PPF) AT 17.5'
   - 3.2. HPD = 74 PPF AT 26'

REFERENCE NOTES:

FIXED CAMERA, WALL MOUNT

FIELD OF VIEW, CAMERA-27

FIELD OF VIEW, CAMERA-28

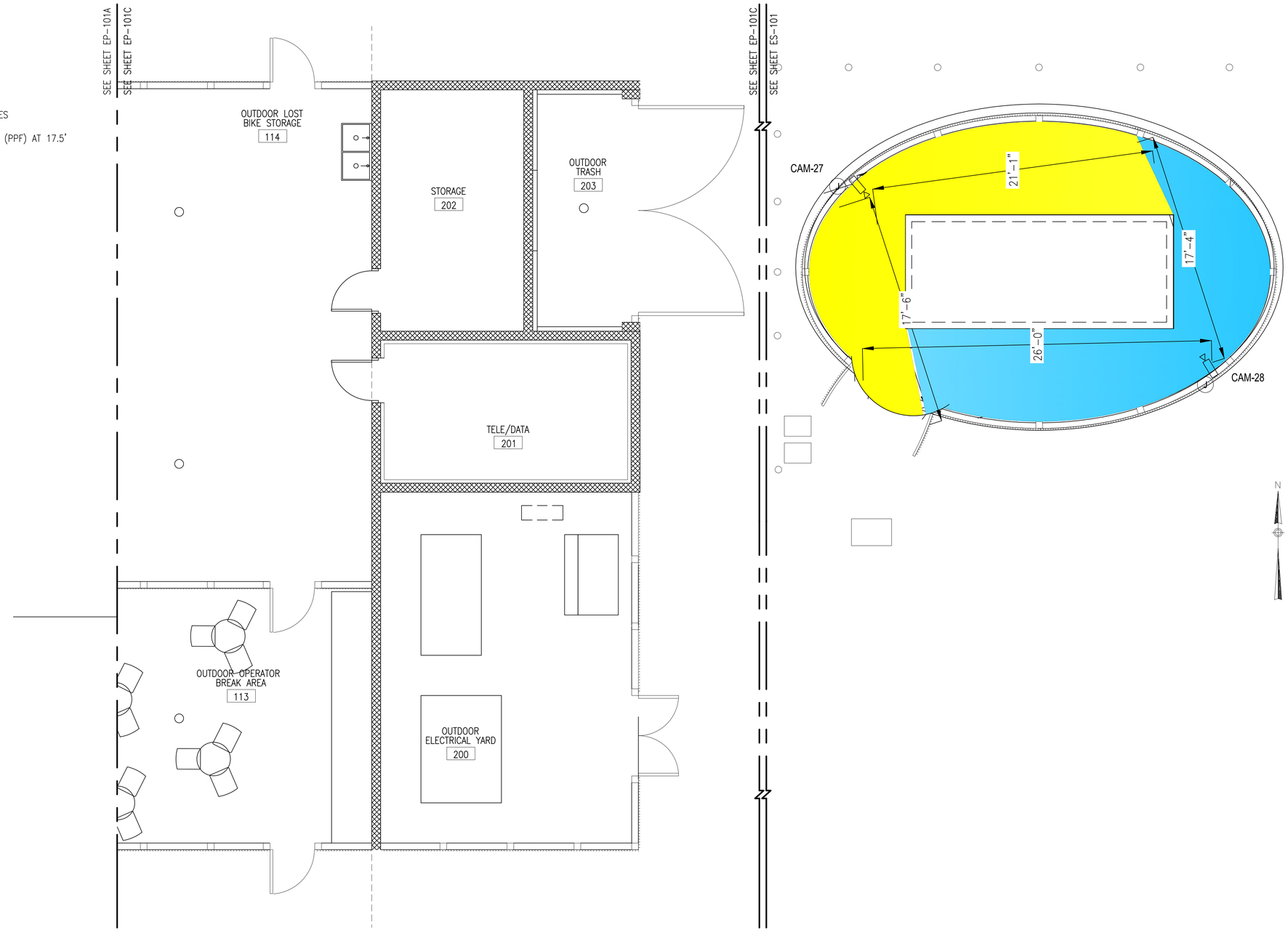

FLOOR PLAN – AREA "C"

1/4"=1'-0"

1 EP-101C

REV.	DATE		BY	SUB	APP.
	08.08.16	GENERATOR/LANDSCAPE MODIFICATION PERMIT SET			

PAC ENGINEERING

DESIGNED BY G. PINEDA
DRAWN BY C. CLAYTOR
CHECKED BY GP
APPROVED BY GP
DATE 08.08.16

OmniTrans Connecting the Community
Governments SANBAG Working Together
SAN BERNARDINO ASSOCIATED GOVERNMENTS

HDR
2280 Market Street
Suite 100
Riverside, Ca 92501-2110

SUBMITTED: _____ PROJECT MANAGER

ISSUED FOR CONSTRUCTION

APPROVED: _____

TRANSIT CENTER

SECURITY CAMERA SYSTEM
FIELD OF VIEW

CONTRACT NO. IFB 16-1001520
DRAWING NO. TY-202
REVISION
SHEET NO. 38 OF 38
SCALE 1/4" = 1'-0"